SAND2016-9823R

Status of Progress Made Toward Preliminary Design Concepts for the Inventory in Select Media for DOE-Managed HLW/SNF

Fuel Cycle Research & Development

Prepared for
U.S. Department of Energy
Used Fuel Disposition Campaign

Edward N. Matteo
Ernest L. Hardin
Teklu Hadgu
Heeho Park
Mark Rigali
Carlos Jové-Colón
Sandia National Laboratories

September 30, 2016
FCRD-UFD-2016-000081
SAND Number: SAND2016-xxxx

DISCLAIMER

This information was prepared as an account of work sponsored by an agency of the U.S. Government. Neither the U.S. Government nor any agency thereof, nor any of their employees, makes any warranty, expressed or implied, or assumes any legal liability or responsibility for the accuracy, completeness, or usefulness, of any information, apparatus, product, or process disclosed, or represents that its use would not infringe privately owned rights. References herein to any specific commercial product, process, or service by trade name, trade mark, manufacturer, or otherwise, does not necessarily constitute or imply its endorsement, recommendation, or favoring by the U.S. Government or any agency thereof. The views and opinions of authors expressed herein do not necessarily state or reflect those of the U.S. Government or any agency thereof.

Sandia National Laboratories is a multi-mission laboratory managed and operated by Sandia Corporation, a wholly owned subsidiary of Lockheed Martin Corporation, for the U.S. Department of Energy's National Nuclear Security Administration under contract DE-AC04-94AL85000.

Sandia National Laboratories

Revision 2
12/20/2012

APPENDIX E
FCT DOCUMENT COVER SHEET [1]

Name/Title of Deliverable/Milestone/Revision No. — Status of Progress Made Toward Preliminary Design Concepts for the Inventory in Select Media for DOE-Managed HLW/SNF FCRD-UFD-2016-000081

Work Package Title and Number — EBS concepts and thermal analysis - SNL (Rev. 2)

FT-16SN08050201

Work Package WBS Number — 1.02.08.05

Responsible Work Package Manager — Edward Matteo (Name/Signature) — September 30, 2016 (Date Submitted)

Quality Rigor Level for Deliverable/Milestone[2]	☒ QRL-3	☐ QRL-2	☐ QRL-1 Nuclear Data	☐ Lab/Participant QA Program (no additional FCT QA requirements)

This deliverable was prepared in accordance with Sandia National Laboratories
(Participant/National Laboratory Name)

QA program which meets the requirements of

☒ DOE Order 414.1 ☐ NQA-1-2000 ☒ Other: FCT QAPD

This Deliverable was subjected to:

☒ Technical Review	☐ Peer Review
Technical Review (TR)	**Peer Review (PR)**
Review Documentation Provided	**Review Documentation Provided**
☐ Signed TR Report or,	☐ Signed PR Report or,
☐ Signed TR Concurrence Sheet or,	☐ Signed PR Concurrence Sheet or,
☒ Signature of TR Reviewer(s) below	☐ Signature of PR Reviewer(s) below

Name and Signature of Reviewers

Emily Stein

NOTE 1: *Appendix E should be filled out and submitted with the deliverable. Or, if the PICS:NE system permits, completely enter all applicable information in the PICS:NE Deliverable Form. The requirement is to ensure that all applicable information is entered either in the PICS:NE system or by using the FCT Document Cover Sheet.*

NOTE 2: *In some cases there may be a milestone where an item is being fabricated, maintenance is being performed on a facility, or a document is being issued through a formal document control process where it specifically calls out a formal review of the document. In these cases, documentation (e.g., inspection report, maintenance request, work planning package documentation or the documented review of the issued document through the document control process) of the completion of the activity, along with the Document Cover Sheet, is sufficient to demonstrate achieving the milestone. If QRL 1, 2, or 3 is not assigned, then the Lab / Participant QA Program (no additional FCT QA requirements) box must be checked, and the work is understood to be performed and any deliverable developed in conformance with the respective National Laboratory / Participant, DOE or NNSA-approved QA Program.*

SUMMARY

As the title suggests, this report provides a summary of the status and progress for the *Preliminary Design Concepts Work Package*. Described herein are design concepts and thermal analysis for crystalline and salt host media. The report concludes that thermal management of defense waste, including the relatively small subset of high thermal output waste packages, is readily achievable. Another important conclusion pertains to engineering feasibility, and design concepts presented herein are based upon established and existing elements and/or designs. The multipack configuration options for the crystalline host media, pose the greatest engineering challenges as these design involve large, heavy waste packages that pose specific challenges with respect to handling and emplacement. Defense-related Spent Nuclear Fuel (DSNF) presents issues for post-closure criticality control, and a key recommendation made herein relates to the need for special packaging design that includes neutron absorbing material for the DSNF. Lastly, this report finds that the preliminary design options discussed are tenable for operational and post-closure safety, owing to the fact that these concepts have been derived from other published and well-studied repository designs.

ACKNOWLEDGEMENTS

This work was supported by the US Department of Energy Office of Nuclear Energy, through the Office of Used Nuclear Fuel Disposition Research and Development within the Office of Fuel Cycle Technologies.

The authors would like to acknowledge the following individuals who made insightful contributions via defense repository integration meetings: Peter Swift (SNL), Kevin McMahon (SNL), Bob MacKinnon (SNL), Tito Bonano (SNL), Dave Sassani (SNL), David Sevougian (SNL), Gordon Appel (SNL), Yifeng Wang(SNL), Frank Perry (LANL), Frank D. Hansen (SNL), Rob Rechard (SNL), Kris Kuhlman(SNL), Geoff Freeze (SNL), Paul Mariner (SNL), and Emily Stein (SNL). The authors would also like to thank Mark Tynan (DOE NE-53), Joe Price (DOE NE-53), Bill Spezialetti (DOE NE-53), Prasad Nair (DOE NE-53), Tim Gunter (DOE NE-53) and William Boyle (DOE NE-53) for their discussions, oversight and guidance on topics covered in this report.

The authors thank Leann Mays for the artistic rendering in Figure 2-12.

The authors extend a special thanks to Emily Stein for a careful, constructive, and insightful technical review of this document.

CONTENTS

SUMMARY iv

ACKNOWLEDGEMENTS v

CONTENTS vi

FIGURES viii

TABLES x

ACRONYMS xi

1 INTRODUCTION 1
- 1.1 Context 1
- 1.2 Purpose and Scope 1
- 1.3 Background 2

2 CRYSTALLINE ROCK ENGINEERED BARRIER SYSTEM CONCEPTS FOR A DEFENSE REPOSITORY 4
- 2.1 Background 4
  - 2.1.1 Geologic settings in crystalline media 4
  - 2.1.2 Review of international and US Crystalline Host Media EBS concepts 6
  - 2.1.3 Pros and cons of crystalline media 17
- 2.2 Disposal Concept Selection for Crystalline Media 18
  - 2.2.1 EBS design features available for crystalline host media 18
  - 2.2.2 Criteria for crystalline repository concept selection 24
- 2.3 Recommended Crystalline Repository Concepts 26
- 2.4 Summary 31

3 ENGINEERED BARRIER SYSTEM CONCEPTS FOR A DEFENSE REPOSITORY IN SALT 32
- 3.1 Background 32
  - 3.1.1 Geologic settings in salt media 33
  - 3.1.2 Review of international and US EBS concepts 33
  - 3.1.3 Pros and cons of salt media 37
- 3.2 Disposal Concept Selection for Salt Media 38
  - 3.2.1 EBS design features available for salt media 38
  - 3.2.2 Criteria for salt repository concept selection 41
- 3.3 Recommended Disposal Concepts for a Defense Repository in Salt Media 42
- 3.4 Summary 45

4 THERMAL ANALYSIS FOR A DEFENSE REPOSITORY INSELECT HOST MEDIA 45

4.1 Thermal analysis for a defense repository in crystalline and salt media using the semi-analytical method 48
4.1.1 Geometry, material properties and other input 48
4.1.2 Results of semi-analytical thermal analysis 51
4.2 Thermal-Hydrology analysis for a defense repository in crystalline rock 59
4.2.1 Model Setup 59
4.2.2 Results and Discussion 62
4.3 Summary 66

CONCLUSIONS 67

REFERENCES 69

Appendix A - Packaging Concept for Defense Waste Disposal in Crystalline Rock 1

Appendix B - Packaging Concept for Defense Waste Disposal in Salt Host Media 1

FIGURES

Figure 2-1. Emplacement modes evaluated in the PASS (from SKB 1993). 8

Figure 2-2. Spent fuel packaging concepts evaluated by the PASS (from SKB 1993). 9

Figure 2-3. KBS-3H concept schematic (from Posiva 2013). 9

Figure 2-4. Cast iron overpack concept for HLW canisters (from NAGRA 1994).....11

Figure 2-5. Disposal concepts for in-tunnel (borehole) emplacement (after EPRI 2010): (left) vertical borehole concept such as KBS-3V, and (right) horizontal or slant holes.....14

Figure 2-6. Disposal concepts for in-tunnel (axial) emplacement (after EPRI 2010): (upper) corrosion-allowance waste package, and (lower) corrosion-resistant waste package, both with low-permeability backfill. 15

Figure 2-7. Disposal concepts for in-tunnel (axial) emplacement with supercontainers (after EPRI 2010): (left) corrosion-resistant packages with clay-based buffer, in long near-horizontal boreholes (KBS-3H); (center) packages with lifetime depending on contents, and concrete buffer and buffer; and (right) corrosion-resistant packages with clay-based buffer and backfill. 15

Figure 2-8. Disposal concepts for caverns with cooling and delayed backfilling (after EPRI 2010): (left) steel waste packages with clay-based buffer/backfill, and (right) steel or concrete packages with clay-based or cementitious pumpable buffer/backfill. 16

Figure 2-9. Disposal concepts for a mined repository with a matrix of deep underground boreholes (after EPRI 2010). 16

Figure 2-10. Multi-canister package arrangements (from DOE 2008, Figure 1.5.2-2). 21

Figure 2-11. Schematic of HLW and DSNF disposal areas in a repository: in-tunnel disposal (top), and vertical borehole emplacement (bottom). 29

Figure 2-12. Multi-pack waste package vault for HLW packages. 30

Figure 2-13. NUHOMS® dry storage system with transfer cask, getting in position to push a loaded waste canister into the storage vault on the right (www.wheelift.com). 30

Figure 3-1. Composite of BSK-3 alternative disposal concept, with layout for Gorleben, canister dimensions, and emplacement machine (from Bollingerfehr et al. 2013, Figure 4.10). 36

Figure 3-2. Salt repository concept for large, heavy waste packages with in-tunnel axial emplacement (from Hardin et al. 2015). 38

Figure 4-1. Projected total DHLW and DSNF number of canisters binned by average thermal power. 46

Figure 4-2. Projected total DHLW and DSNF percentage of canisters binned by average thermal power. 47

Figure 4-3. Decay heat curves for bins of DHLW and DSNF waste types with highest range of thermal power. (Note: For the DSNF, only bins with thermal power less than 1 kW were considered.) 47

Figure 4-4. Decay heat curves of bins of DHLW and DSNF waste types with lowest range of thermal power. 48

Figure 4-5. DHLW standardized Canisters (DOE, 2008). 50

Figure 4-6. 5-DHLW/DOE Long Co-disposal waste packages (DOE, 2008). 51

Figure 4-7. Temperature histories at waste package surface after surface storage of 10 years for single pack waste packages containing DHLW and DSNF waste types, for a repository in crystalline medium. The dashed lines represent the case where the high buffer thermal conductivity value of 1.43 W/m-K is used. 56

Figure 4-8. Temperature histories at waste package surface after surface storage of 50 years for single pack waste packages containing DHLW and DSNF waste types, for a repository in crystalline medium. The dashed lines represent the case where the high buffer thermal conductivity value of 1.43 W/m-K is used. 56

Figure 4-9. Temperature histories at waste package surface after surface storage of 10 years for multi-pack waste packages containing DHLW waste types, for a repository in crystalline medium. The dashed lines represent the case where the high buffer thermal conductivity value of 1.43 W/m-K is used. 57

Figure 4-10. Temperature histories at waste package surface after surface storage of 50 years for multi-pack waste packages containing DHLW waste types, for a repository in crystalline medium. The dashed lines represent the case where the high buffer thermal conductivity value of 1.43 W/m-K is used. 57

Figure 4-11. Temperature histories at waste package surface after surface storage of 10 years for multi-pack waste packages containing DHLW waste types, for a repository in salt medium. The dashed lines represent the case where the high buffer thermal conductivity value of 3.2 W/m-K is used. 58

Figure 4-12. Temperature histories at waste package surface after surface storage of 50 years for multi-pack waste packages containing DHLW waste types, for a repository in salt medium. The dashed lines represent the case where the high buffer thermal conductivity value of 3.2 W/m-K is used. 58

Figure 4-13. Surface layout for DOE managed waste disposal in crystalline medium (Stein et al., 2016). The dotted lines represent cross-section of domain used for thermal-hydrology simulations in this study. 60

Figure 4-14. Mesh used in thermal-hydrology simulations. 61

Figure 4-15. Plan view of cross-section at repository level showing 9 drifts with 9 waste package each. The figure also shows access drift, host rock, bentonite buffer and DRZ. 62

Figure 4-16. Side view of repository level showing 9 drifts with waste packages, buffer, DRZ and host rock. 62

Figure 4-17. Temperature distribution for multi-pack waste packages containing 5 SRS glass at simulation time = 20 years. Disposal with no surface storage. 63

Figure 4-18. Temperature distribution for multi-pack waste packages containing 5 calcine canisters at 20 years simulation time. Disposal with no surface storage. 64

Figure 4-19. Temperature history at an observation point (see Figure 4-15) for multi-pack waste packages containing 5 SRS glass canisters, 5 HS Glass canisters, 5 calcine canisters, and single pack HS Cs-Sr glass canisters and DSNF waste packages. Disposal with no surface storage. 65

Figure 4-20. Temperature history at an observation point for multi-pack waste packages containing 5 SRS glass canisters. Effect of material properties. Disposal with no surface storage. 65

TABLES

Table 2-1. Key features and variants for geologic disposal concepts (after EPRI 2010), with discussion of relevance to a defense repository. 12

Table 2-2. Dimensions for recommended defense repository emplacement panels.....31

Table 3-1. Dimensions for the defense repository emplacement concept in salt media....44

Table 4-1. Sizes of single pack canisters for disposal in crystalline and salt repositories.49

Table 4-2. Generic repository in crystalline rock – Single Pack canisters – Temperature at waste package surface and drift wall for different parameter values and surface storage time of 10 years 53

Table 4-3. Generic repository in crystalline rock – Multi-pack waste package – Temperature at waste package surface and drift wall for different parameter values and surface storage time of 10 years 54

Table 4-4. Generic repository in salt – Single Pack canisters – Temperature at waste package surface and drift wall for different parameter values and surface storage time of 10 years 55

Table 4-5. Base case material properties 60

ACRONYMS

AECL	Atomic Energy Canada Limited
BWR	Boiling Water Reactor
CSNF	Commercial spent nuclear fuel
Cs-Sr	Cesium Strontium
DHLW	Defense high-level waste
DOE	US Department of Energy
DOE-NE	US Department of Energy, Office of Nuclear Energy
DPC	Dual Purpose Canister
DHLW	DOE-Managed High-Level Radioactive Waste
DSNF	Defense spent nuclear fuel
DRZ	Disturbed Rock Zone
DW	Drift Wall
DWPF	Defense Waste Processing Facility
EBS	Engineered Barrier System
EMT	Electrometallurgical treatment
HEU	Highly enriched Uranium
HIP	Hot isostatic pressing
HLW	High-level radioactive waste
HS	Hanford Site
ILW	Intermediate Level Waste
INL	Idaho National Laboratory
INTEC	Idaho Nuclear Technology and Engineering Center
LEU	Low-enriched Uranium
LLW	Low-level radioactive waste
MCO	Multi-canister overpack
MEU	Medium enriched Uranium
MOX	Mixed oxide (fuel)
PBC	Purpose-built canister
PWR	Pressurized water reactor
RCRA	Resource Conservation and Recovery Act
SBW	Sodium-bearing waste
SMR	Small modular reactor
SNF	Spent nuclear fuel
SRS	Savannah River Site
TBM	Tunnel boring machine
UFD	Used Fuel Disposition
US	United States of America
WIPP	Waste Isolation Pilot Plant
WP	Waste Package

STATUS OF PROGRESS MADE TOWARD PRELIMINARY DESIGN CONCEPTS FOR THE INVENTORY IN SELECT MEDIA FOR DOE-MANAGED HLW/SNF

1 INTRODUCTION

1.1 Context

In March 2015, the US President Barak Obama issued a Presidential Memorandum announcing the decision to pursue development of a nuclear waste repository exclusively for the disposal of high-level waste resulting from defense-related atomic energy activities.

The development of a separate repository for Defense HLW (herein DOE-Managed HLW and SNF) necessitates a Research and Development Plan for implementation. DOE's Used Fuel Disposition Campaign is implementing such an R&D plan, under the title of *DOE-Managed HLW and SNF Research*. This research portfolio comprises four work packages, including

- Inventory and Waste Characterization
- Preliminary Design Concepts
- Organizational and Procedural Frameworks
- Safety Analysis and Technical Site Evaluation

1.2 Purpose and Scope

The purpose of this report is to provide a summary of the FY16 work performed for the *Preliminary Design Concepts* work package. The Preliminary Design Concepts Work Package is composed of three sub-work packages including

1) Engineered Barrier System (EBS) concepts and thermal analysis
2) Disposal overpack and waste package options
3) Repository layout and waste package emplacement

The overall objective of the *Preliminary Design Concepts* is to address technical elements necessary to evaluate the preliminary design concepts for the inventory within select media. Specific geologic media under consideration are those currently investigated within the Used Fuel Disposition Campaign (argillite, crystalline, and salt). *The FY16 work has focused on only two host media: crystalline and salt*.

This report is structured such that the three work packages that comprise the *Preliminary Design Concepts* are integrated, exception being the thermal analysis, which has its own section. In other words, rather than subdivide this report on each work package separately, all of the design elements (EBS, overpack, layout, etc.) are discussed in terms of the a generic (i.e., not site specific) design concept for each host. The report is approximately divided between discussion of a Generic Crystalline Design Concept (Section 2) and a Generic Salt Design Concept (Section 3). Section 4 is devoted to the modeling results for thermal analysis.

For each host media, the following critical factors are covered by this report:

1) Geologic setting
2) Review of international and US precedents for design elements and concepts
3) Pros and cons specific to the host media
4) Criteria for design concept selection
5) Waste package options and overpack materials
6) Recommended design concept, including layout and emplacement options
7) Thermal analysis for waste types from the DOE-Managed Inventory

1.3 Background

Waste Characteristics – Much of the US defense waste inventory has not been produced yet, and presently exists in bulk solid, semi-solid, or liquid form. Accordingly, estimates of canister numbers are uncertain, especially for volumetrically minor waste forms for which the waste form and canisterization modality have not been determined. (In this discussion the term *canister* refers to a sealed container used for storage, and one or more canisters may be inserted in an *overpack* or *waste package* for final disposal).

Based on a recent summary (SNL 2014) the number of vitrified HLW pour canisters will be at least 19,132 and could be as high as 30,532 if the Idaho calcine waste is vitrified instead of directly disposed or hot-isostatic pressed (HIP) and disposed of in 320 large waste packages.[1] Another minor waste stream is projected to result from electro-metallurgical treatment (EMT) of research reactor fuel (assume various waste forms co-disposed in roughly 35 large packages). In addition, approximately 12 large packages could result from direct disposal of Hanford Cs/Sr capsules (in lieu of approximately 340 additional pour canisters of vitrified HLW).

A defense repository will therefore need to effectively disposition a large number of HLW pour canisters (at least 20,000) and will need the capability to handle and dispose of several hundred large waste packages (here defined as up to 83 inches in diameter, similar to the co-disposal waste packages planned for a Yucca Mountain repository) for co-disposed wastes from minor waste streams. The capability to dispose of large, heavy packages could also be used for Naval spent fuel, although that waste stream is generally hotter and is not addressed by this analysis.

The current defense-related spent nuclear fuel (DSNF) inventory is estimated to consist of 3,716 canisters of various compositions and canister sizes (roughly comparable to the size of HLW glass pour canisters), comprising 2,532 MTHM (SNL 2014).

On a per-canister basis, one average DSNF canister contains from approximately 1× to 5× more of relatively long-lived fission products (^{79}Se, ^{99}Tc, ^{126}Sn, ^{135}Cs, ^{129}I) than one average HLW canister (averaging over all canister types and sizes; BSC 2004). Similarly, one average DSNF canister contains from approximately 10× to greater than 100× more of certain actinides (transmuted, long-lived isotopes of Am, Cm, Np, Pu, Th, and U). Whereas the average heavy metal equivalent content

[1] Basis of estimate (SNL 2014): 7,824 short pour canisters from the Savannah River Site; 10,586 pour canisters from the Hanford Waste Treatment Plant, mostly long; 34 canisters of HLW glass fabricated for the Asse testing program in Germany; and 688 short canisters with reformed Na-bearing waste. Vitrified Idaho calcine waste would add approximately 11,400 pour canisters. These estimates do not include the 275 pour canisters of HLW glass that are currently stored at the West Valley facility in New York.

of HLW and DSNF canisters is similar (0.5 and 0.64 MTHM/canister was assumed, respectively, on average (BSC 2004); the greater average radionuclide inventory in DSNF can be attributed to somewhat greater mass and burnup. The importance of individual radionuclides also depends on mobility in the geosphere, concentration-to-dose conversion for humans, and exposure (SNL 2007). For a generic analysis, HLW and DSNF canisters can be considered to contain similar types of long-lived fission products and actinides, but with more radioactivity in DSNF canisters. Also, DSNF contains fissile material (mainly ^{235}U and ^{239}Pu) that has been mostly recovered from HLW by chemical separation.

The defense waste inventory consists of large numbers of small, relatively lightweight canisters. The waste will be pre-canistered (typically stainless steel, welded construction) and should not be removed from those canisters. Shielding requirements for personnel protection will depend mostly on ^{137}Cs abundance, which in turn will depend on the waste age out-of-reactor. There are also other, more long-lived gamma emitters present in the major waste streams, and the possibility of fast neutron emissions from spontaneous fission of certain actinide isotopes. Thus, some shielding is required for all defense waste forms regardless of age. Defense waste will have low heat output compared to commercial spent fuel (CSNF), and all types of defense waste will include long-lived radionuclides, some of which are mobile in the geosphere.

Repository Basics – The defense repository is conceived to be a mined repository, consisting of a network of tunnels excavated on one or more levels (sometimes called a "vault"). The scale of the facility will be substantially smaller than a repository for commercial spent fuel (which would have approximately 10,000 to 80,000 waste packages depending on their size (Hardin and Kalinina 2016). The defense repository will require several tens of kilometers of tunnels, plus access and ventilation shafts, and a waste handling route. It would be constructed at a depth of approximately 500 to 1,000 m depending on local geology. The hydrologic situation would likely be water saturated at this depth, and the hydrostatic pressure great enough so that boiling would not occur anywhere in the repository even at elevated temperature.

The production of decay heat will be on the order of 1 MW overall, decreasing with time, and distributed throughout the facility. Temperature limits will be imposed on engineered barrier materials such as the buffer clay, and these limits will be readily met as discussed in the sections below. The repository safety case would rely on multiple barriers: the geosphere, engineered borehole/shaft/tunnel seals, tunnel backfill, buffer material around waste packages, the waste container, and the waste form. The disposal concept and the safety assessment for a defense repository in crystalline rock would be similar to those developed for repository programs in Sweden and Finland, and the US program could take advantage of that experience (SKB 2013).

The technical feasibility of a defense repository in crystalline rock, salt host media, or any medium will depend on safety, engineering feasibility, thermal management, and criticality control. Aspect so each of these are listed below:

- Safety includes operational safety for workers and the public considering normal and off-normal events; and post-closure waste isolation performance, which is shown with reasonable assurance, to meet regulatory performance objectives.
- Engineering feasibility includes constructability, conveyance of waste packages underground, radiological shielding, repository ventilation, control of workplace hazards, operational lifetime of facilities, and closure.
- Thermal management includes thermal limits for buffer and backfill materials, and for waste packages, which are met during operations and during the post-closure performance period.

- Post-closure criticality control applies to DSNF during operations and during the post-closure performance period. *Pre-canistered* DSNF requires installation of long-lived neutron absorbers at the point of origin.

This analysis addresses all of these by direct analysis (e.g., thermal) or by reference to other published studies.

2 CRYSTALLINE ROCK ENGINEERED BARRIER SYSTEM CONCEPTS FOR A DEFENSE REPOSITORY

This analysis reviews mined repository concepts and selects generic (non-site specific) disposal concepts for defense wastes in crystalline rock. These concepts are intended to support modeling and performance assessment, and pre-design feasibility studies, in preparation for possible future siting of a defense repository.

We begin by providing a working description of the crystalline geologic settings under discussion. The review part of the analysis considers concepts developed in the US and by international repository R&D programs, and how they could be adapted or optimized for the particular characteristics of defense waste forms. The selection part identifies the major features of a geologic repository in crystalline media, develops high-level criteria for feature selection, and proposes two generic disposal concepts (for HLW and DSNF). A set of repository thermal management calculations is presented (Section 4), which confirms that thermal limits are likely to be met.

2.1 Background

2.1.1 Geologic settings in crystalline media

Potential crystalline host rocks include igneous intrusive rock types such as granite, gabbro, diorite, etc., that form from molten magma at great depth in the lithosphere. The large, contiguous bodies that form at depth are called plutons. They are brought close to the surface by uplift, faulting and erosion. High-grade, siliceous metamorphic rocks such as schist and gneiss occurring in a stable, cratonic environment may also be considered. Other crystalline geologic settings of potential interest include very young plutons, siliceous tuffs, and unsaturated crystalline media (above the water table). This report assumes a shield-type or cratonic setting because these typically have greater depth and areal extent, and low surface topographic relief, and therefore offer more potential locations for siting a repository.

Crystalline rock is usually predominantly feldspar, with quartz and accessory minerals such as micas, hornblende, and pyroxene. These mineral constituents crystallize at high temperature (on the order of 800°C or higher) so they are refractory, with good resistance to peak temperatures of 200°C or greater in a repository. Crystals are intergrown, and there may be cooling joints filled with a lower crystallization temperature fraction of the original magma. Laboratory ultrasonic studies have shown that microcracking slowly increases with increased temperature, caused by differential thermal expansion of minerals in the polycrystalline material (Lockner 1993; Freire-Lista et al. 2016). Thus, the service temperature limit for crystalline rock in a repository could be associated with weakening and increased permeability.

The geomechanical strength of crystalline rock is generally high and exhibits brittle to semi-ductile deformation in excavations and borings. Under certain conditions of high stress and/or elevated temperature, competent crystalline rock such as granite may also exhibit time-dependent creep or static fatigue that has been attributed to stress corrosion and crack formation, and deformation (Biurrun and Hahne 1989; Martin and Brace 1972). However, creep in high-quality granite is rare. A well-known example of inelastic, post-peak excavation-scale deformation of a tunnel in granite

was the mine-by-experiment in sparsely fractured Lac du Bonnet granite at the Pinawa Underground Laboratory (Read and Martin 1996). Significant rock failure was observed around the opening, but the deformation occurred at the time of excavation and time-dependence was nil. Another example of long-term stability in crystalline rock at depth is the Äspö Hard Rock Laboratory in Sweden (Martin et al. 2001). Such observations are common in granite excavations.

Granite bodies currently being actively considered for geologic repositories in Sweden and Finland are part of the Fenno-Scandian shield. The Canadian shield is a similar formation of deep crystalline rock over a large region that includes part of the US. Other potential areas for geologic disposal in crystalline rock in the US were identified by Mariner et al. (2011). Shield geology is characterized by cratons, which are regions of similar crystalline rock that are potential targets for exploration as repository host rock. The geologic ages for cratonic or shield granites tend to be very old (Precambrian) with radiometric dates on the order of 10^9 years.

The hydraulic permeability of crystalline rock is dominated by fractures, fracture zones, and faults. Intrinsic permeability of intact (unfractured) rock is on the order of 10^{-20} m^2, and the bulk permeability of sparsely fractured, low permeability granite is around 10^{-18} m^2, so that only the more permeable fracture zones and faults provide important paths for groundwater (e.g., Forsmark granite, SKB 2011). Bulk permeability decreases significantly from the surface to prospective repository depths. In settings without topographic relief, and especially under islands or coastal margins, there may be no lateral movement of groundwater. Stagnant groundwater can evolve into brine, as is the case for the Canadian shield region investigated by Atomic Energy of Canada, Ltd. (Gascoyne 2004; Bottomley et al. 1994), and the Forsmark site for the SFL repository in Sweden (SKB 2011). There are many examples of crystalline settings in the US with saline, and likely ancient groundwater (Perry 2014).

Continental glaciation has occurred in multiple stages over the past 2.5 Myr, in the northern shield regions of the US, Europe and Asia. Glaciers scour the surface, change the near-surface hydrology and biosphere, alter the groundwater composition, leave surface deposits, and cause isostatic continental depression and rebound. In the Swedish repository performance assessment, glaciation is considered to be a likely future (SKB 2011). Whereas shield regions are tectonically quiescent (they have survived for 10^9 years) faulting and seismicity are still occurring, caused by rebound from the weight of continental ice sheets. In addition, because of residual effects from ice loading, and because crystalline rock is stiff and unyielding, the in situ stress magnitude may be greater near the surface than in other geologic settings. The great strength of high-quality crystalline rock helps to mitigate the effects from in situ stress on repository construction and development (Martin et al. 2001).

Depending on the characteristics of a particular site, the definition of crystalline rock might be extended to include certain high-grade, siliceous metamorphic rock types such as schist. Other crystalline geologic settings of potential interest include very young plutons, siliceous tuffs, and unsaturated crystalline media (above the water table). This report assumes a shield-type or cratonic setting because these typically have greater depth and areal extent, and low surface topographic relief, and therefore offer more potential locations for siting a repository.

In summary, crystalline rock is generally composed of relatively inert, high-temperature minerals with excellent tolerance for elevated temperature in repository applications. The intact rock matrix has very low hydraulic permeability, and fluid movement is controlled by fractures, fracture zones, and faults. Sparsely fractured granite has low bulk permeability that decreases with depth. Excavations in granite tend to be stable, with minimal ground support requirements. Continental shield terranes such as those in northern Europe and North America have been glaciated in relatively recent geologic time, with attendant surface geology, groundwater conditions, and

isostatic rebound. In situ stress conditions are mitigated by the great strength of high-quality crystalline media.

2.1.2 Review of international and US Crystalline Host Media EBS concepts

The KBS-3 disposal concept is being actively developed in Sweden and Finland, closely followed by crystalline R&D programs elsewhere. Earlier R&D programs in Canada, France, and Switzerland also investigated crystalline rock for disposal of HLW and commercial spent fuel, but have shifted emphasis to other media and waste forms.

It is important to factor in the regulatory environment for disposal concept development, which has led to a requirement of longevity for engineered barriers. Prior to 2000, many countries had not yet finalized disposal regulations with quantitative performance objectives. Today most countries that have done so specify release or dose limits for 10^5 to 10^6 years. Implications for EBS longevity can be significantly different for such periods compared to shorter periods (e.g., 10^4 years in 10CFR60).

As repository conceptual designs were developed internationally for crystalline rock, clay/shale, and salt, a series of multi-concept reviews was performed. These included reviews by the Nuclear Dispositioning Authority (NDA 2010) in the U.K. and the Electric Power Research Institute (EPRI 2010), Sandia National Laboratories (Hardin et al. 2012), and Radioactive Waste Management, Ltd. and its contractors (Watson et al. 2014; Dickinson et al. 2015). Each of the cited reviews is discussed below with emphasis on concepts for disposal of HLW and spent fuel in crystalline rock.

KBS-3 Concept for Spent Fuel – The KBS-3 concept as being developed in Sweden will emplace approximately 6,000 waste packages in a single-level facility at a depth of 500 m (SKB 2011). The repository will be accessed by a combination of shafts and ramps, and all repository openings will be excavated by the drill-and-blast method. A smaller repository of a closely similar type is also being developed in Finland (Posiva 2012a).

Waste packages would be emplaced individually in short, large-diameter vertical boreholes drilled into the floor of a long access tunnel (Figure 2-1). Each package would contain spent nuclear fuel assemblies, and have heat output of 1,700 W or less at the time of emplacement (fuel age 50 to 100 years out-of-reactor). Pre-formed blocks of compacted bentonite would be placed beneath, around and on top of each package. At closure, access tunnels would be cleared of concrete and other materials, and backfilled with a mixture of compacted bentonite particles and sand or crushed rock. Additional bulkheads would be used to isolate permeable features such as faults or fracture zones. Borehole and shaft seals would isolate the underground facility from the surface.

The waste packages were proposed to have an exterior shell of copper, with the method of fabrication, and the manner of filling the canister, to be determined from a small number of options. These options included filling with molten lead and then electron beam welding, or filling with copper powder and hot isostatic pressing around the spent fuel waste (Figure 2-2). The subsequent Project on Alternative Systems Study (PASS; SKB 1993) adopted the same KBS-3 concept with the addition of three additional waste packages: 1) steel canister, filled with particulate material in a cold state; 2) steel canister, filled with molten lead; and 3) steel canister with copper shell, filled with particulate material in cold state.

In the most recent safety assessment of the KBS-3 concept, specific to the selected site at Forsmark (SKB 2011), waste package lifetime is shown to be at least 10^5 years with very few failures (less than one per repository probabilistic realization). Package failure was attributed to sulfide corrosion from exposure to groundwater, caused by buffer erosion due to fracture flow. The possibility of erosion means that individual package locations must be selected based on site investigations, so

as not to be intersected by flowing (or potentially flowing) fractures. Both copper and steel are considered to be corrosion allowance materials, but copper is stable in water at reducing conditions such as may be present in the hydrated buffer, whereas elemental iron reduces water to form hydrogen and Fe-oxides. The Swedish performance assessments have considered various processes such as microbial-influenced corrosion, gas generation, ice margin hydrology, and rebound faulting (SKB 2011).

The PASS study compared copper and steel waste package variants for the KBS-3 vertical borehole emplacement concept, to other emplacement modes (Figure 2-1), including

- Medium-long borehole (MLH) concept in which waste packages would be emplaced in horizontal borings and surrounded by compacted, dehydrated bentonite. Waste package variants were the same as KBS-3. This concept, using the copper/cast iron insert package design, was later described as KBS-3H and investigated further at the Äspö Hard Rock Laboratory (see SKB 2008; other tests are ongoing).
- Very-long borehole (VLH) concept with steel, copper, and copper/steel package concepts, that would be self-supporting and surrounded by compacted bentonite.
- Very-deep borehole (VDH) concept using large-diameter boreholes drilled from the surface to 4 km depth. Waste package variants were a titanium package, a titanium package filled with concrete, and a copper (hot isostatic pressed) package. Packages would be surrounded by blocks of compacted bentonite, backfilled with deployment mud.

The PASS study included separate, multi-attribute comparisons for canister type and emplacement mode. The copper/steel package and the KBS-3 or MLH emplacement mode were recommended. The PASS comparison was augmented in 1995 with the addition of another waste package concept: a copper canister with cast iron insert (SKB 1995). The advantages include simpler fabrication, increased strength in response to external loading, and better control of the potential for post-closure criticality. The modified KBS-3 concept has been used in subsequent safety assessments and prototype encapsulation engineering.

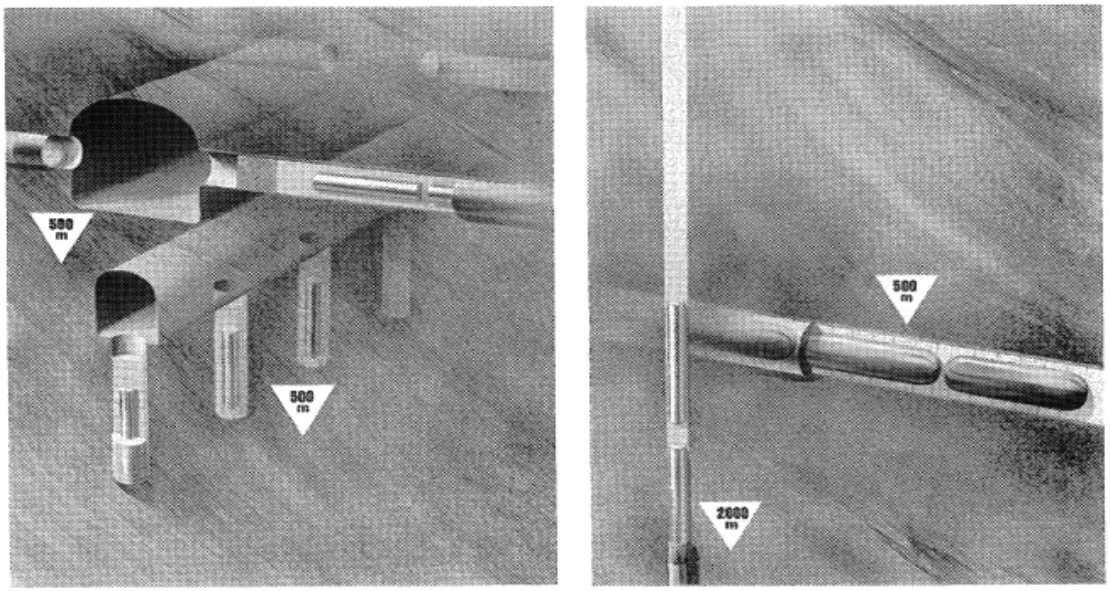

KBS-3 and Medium-long tunnels **Deep holes and Long tunnels**

Figure 2-1. Emplacement modes evaluated in the PASS (from SKB 1993).

KBS-3H (Horizontal) Variant – The KBS-3H concept is the principal alternative to the reference KBS-3 vertical concept, and has been extensively investigated in Sweden and Finland, with proof-of-concept testing at the Äspö Hard Rock Laboratory (Posiva 2012b). The concept would emplace approximately 50 waste packages each into 300-m near-horizontal, large-diameter boreholes drilled from an underground room (Figure 2-3). Prior to emplacement, each waste package would be assembled with a buffer of compacted, dehydrated, blocks of swelling clay, into a supercontainer. The supercontainer would be sheathed in perforated metal sheeting and end plates, making it a robust assembly for insertion in the emplacement borehole. Supercontainers would be slid into position in the boreholes using a water cushion. The boreholes would slant upward away from the starting room, for drainage of this water and any groundwater produced. Additional plugs of cement and buffer clay would be inserted during emplacement operations to isolate potential flowing fractures and other discontinuities.

The KBS-3H variant would involve much less excavated volume, relative to KBS-3V, for a repository. The entire inventory of 6,000 waste packages for the Swedish repository could be accommodated in as few as 120 deposition boreholes. It would minimize the formation of an excavation disturbed zone (EDZ) around the borehole compared to drill-and-blast tunneling. Some disadvantages are the increased difficulty of geologic characterization to identify potential flowing fractures, and the necessity of grouting to control water inflow before emplacement. Flow of water during emplacement could damage the clay blocks in the supercontainers. Drilling the boreholes to 300 m total length could be challenging, and the equipment for operating in the borehole is complex (drilling, grouting, and emplacing waste packages). Horizontal borings are susceptible to interference from spalling which could result from natural fracturing, or from induced fracturing and spalling after emplacement but before buffer swelling, producing flow channels through the rock next to the borehole (Posiva 2013).

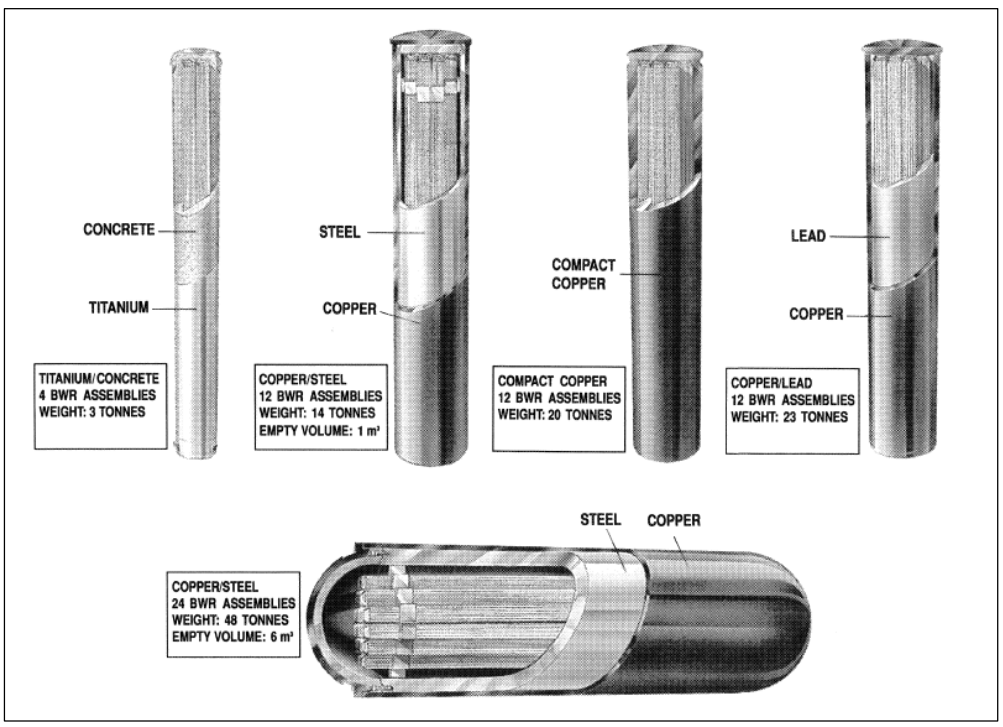

Figure 2-2. Spent fuel packaging concepts evaluated by the PASS (from SKB 1993).

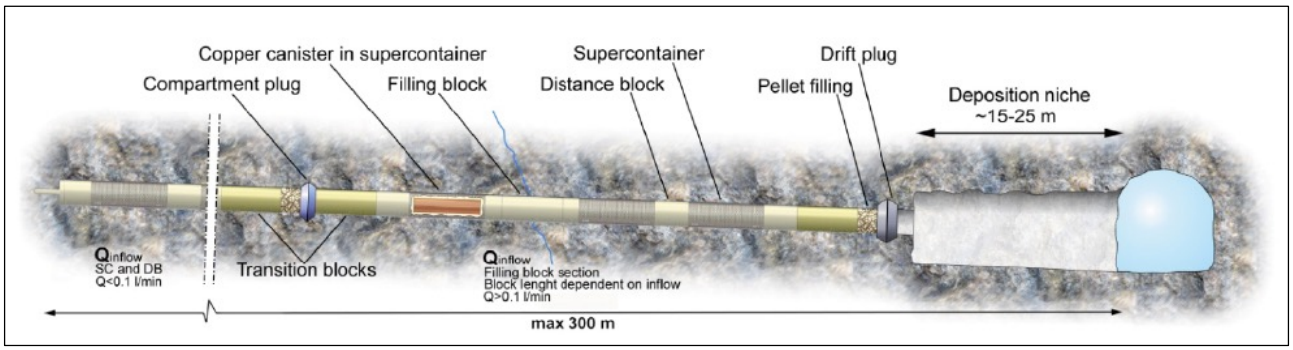

Figure 2-3. KBS-3H concept schematic (from Posiva 2013).

Atomic Energy Canada Limited (AECL) Disposal Concept for Spent Fuel and HLW – The repository concept proposed in conjunction with the *Environmental Impact Statement on the Concept for Disposal of Canada's Nuclear Fuel Waste* would consist of a single-level facility at a depth of 500 to 1,000 m, excavated by the drill-and-blast method and accessed by shafts (Simmons and Baumgartner 1994; Johnson et al. 1994). The repository would disposition approximately 140,000 waste packages each containing 72 CANDU fuel elements with heat output of 300 W or less (at least 10-year fuel age out-of-reactor). Borehole emplacement would be used, similar to KBS-3 but with different access drift (vault) geometry and buffer composition. Emplacement boreholes in the floor would have 1.24 m diameter and 5 m depth, arrayed on 2.1-m centers, three across and 94 along the length of a large room (room dimensions 5.5 m high, 8 m wide, and 230 m long). The nominal disposal depth for this emplacement mode was set to 500 m based on geomechanical stability of the vault floor, particularly the webs between emplacement boreholes. For disposal at greater depth (e.g., 1,000 m) in-tunnel emplacement was recommended.

A corrosion resistant waste package was proposed, to provide at least 500 years of complete containment in a chloride brine environment. Corrosion of iron, carbon steel, stainless steels, nickel-based alloys, titanium alloys and copper was considered, and titanium and copper were selected as reference waste package materials. Waste packages would be surrounded by at least 0.25 m of clay-based low-permeability buffer material. The buffer for each emplacement borehole would be compacted in situ, then drilled out for a waste package. The buffer material would be 50% swelling clay, mixed with sand or finely crushed rock. A clay-based buffer was preferred to cementitious materials that could produce high-pH leachate that promotes corrosion of titanium and copper. Studies have shown that low-pH cement formulations may be useful as buffer materials (ESDRED 2005) as proposed in concept studies discussed below.

Each vault would be backfilled in two stages, starting with a 25% clay mixture compacted using standard equipment, then completed with a pneumatically emplaced and compacted 50% clay mixture similar to the buffer material. A system of concrete plugs, grout curtains, and seals (borehole, shaft) would isolate the disposal vaults.

French Concept for Crystalline Media – The French authority ANDRA (French National Radioactive Waste Management Agency) is presently developing a geologic repository in argillite at their Meuse/Haute-Marne Center site. Prior to 2005 the ANDRA also supported a science and engineering R&D program for disposal in granite (ANDRA 2005).

The conceptual repository design for granite consisted of separate modules or vaults for different types of LLW/ILW and HLW glass or spent fuel. The C- and CU-type wastes correspond to the

US defense waste inventory. The advantages of separate, smaller modules include easier avoidance of through-going features such as faults, and simpler management of waste heat. However, the quantity of heat-generating waste could make it difficult to avoid every through-going feature. For avoiding steeply-dipping features, emplacement on multiple levels was considered. Tunnels connecting modules would be extensively sealed where they cross these features, using swelling clay and other materials. Emplacement tunnels or vaults would be "dead-ended" so that radionuclide migration within man-made materials or along the excavation damage zone, could occur in only one direction. Seals would be installed in stages, protecting sub-zones of a few packages, then modules, then access tunnels, and so on.

Pre-canistered C- or CU-type waste would be overpacked for disposal in thick-walled containers made of steel for HLW glass, or copper for spent fuel. The concept for HLW and spent fuel packaging and emplacement in short, large-diameter borings in the floor, was compared to the KBS-3 concept (ANDRA 2005). The choice of copper is generic and would be reevaluated using site-specific information to compare alternatives. A buffer of swelling clay would be used around every HLW and spent fuel waste package. Heat output of the waste would be managed using decay storage, to limit the maximum buffer temperature (at the waste package surface) to 90°C similar to the 100°C limit imposed by other KBS-3 implementations (Posiva 2012a; SKB 2011).

An important contribution of the 2005 ANDRA conceptual design was the incorporation of reversibility, i.e., design and operation of the repository in such a way that it could be readily modified or undone by future populations. Thus, the repository design should be simple, modular and robust, using durable materials to facilitate potential withdrawal of packages. Closure of the repository would be done in stages corresponding to the seals program, and separated in time. A long-term observation program would be instituted to provide information to inform future decisions.

Swiss Concept - National Cooperative for the Disposal of Radioactive Waste (NAGRA) Crystalline Rock Disposal Concept – A disposal concept for HLW glass in a deep geologic repository in the crystalline basement, was developed for the Kristallin-I generic performance assessment (NAGRA 1994). The concept called for in-tunnel axial emplacement of waste packages in horizontal tunnels, surrounded by blocks of compacted, dehydrated bentonite. Pour canisters of vitrified HLW would be sealed inside thick-walled (varying from 15 to 25 cm) annealed cast steel overpack (Figure 2-4). Each overpack would have a welded lid closure, with surface treatment to reduce residual tensile stress in the heat-affected zone. The waste packages would be heavy and self-shielding, permitting some worker access to waste package vicinity during emplacement and installation of the buffer. Remote-operated equipment would be used to the extent practical. The waste package would withstand external pressure loading of 30 MPa, even with wall thickness reduction by corrosion. This corresponds to the hydrostatic pressure of groundwater, plus the buffer clay swelling pressure (4 to 18 MPa). A study of the long-term potential for packages to sink due to creep within the buffer indicated that some creep could occur without impacting waste isolation performance (NAGRA 1995).

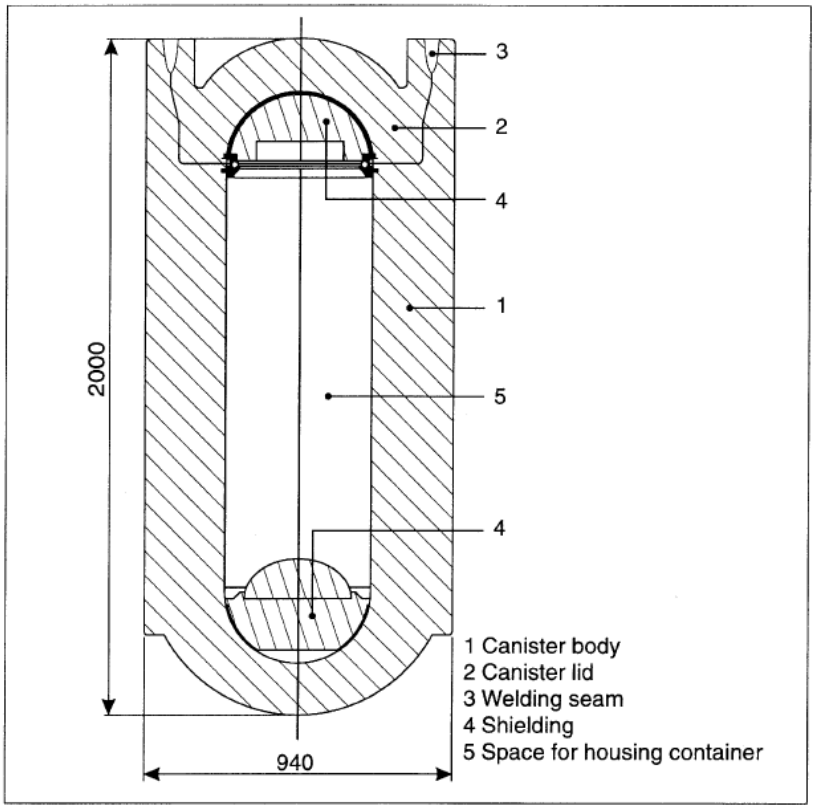

Dimensions of the canister are given in units of millimetres.

Figure 2-4. Cast iron overpack concept for HLW canisters (from NAGRA 1994).

NDA Generic Disposal Concept Study – The Nuclear Dispositioning Authority (NDA) of the U.K. published a set of generic safety case documents in 2010, that was intended to inform stakeholders about disposal options and to include quantitative performance assessment. The description of generic designs (NDA 2010) identified concepts for three rock types: higher-strength, lower-strength sedimentary, and evaporites. The higher-strength category included igneous and metamorphic rock types, and possibly indurated sedimentary rock types, that are geomechanically competent and in which significant fluid movement occurs only in discontinuities (fractures, faults, etc.). The higher-strength category included granite, and the associated disposal concept for HLW and spent fuel is most relevant to disposal of US defense waste in crystalline rock.

Separate panels or modules would be constructed for different types of waste. In higher-strength rock, the waste packages would be emplaced in short, large-diameter vertical borings, surrounded by blocks of compacted, dehydrated swelling clay. Waste packages were assumed to have a copper outer layer and a cast iron insert, like the KBS-3 design discussed above. Disposal borings would be arrayed along parallel, dead-ended horizontal disposal tunnels. Each tunnel would be approximately 340 m long to accommodate deposition of 48 waste packages. By contrast, in lower-strength sedimentary rock, in-tunnel axial emplacement would be used, with packages set on plinths of compacted clay block, and surrounded by a pelletized fill of compacted clay.

At closure, the disposal tunnels would be backfilled with a mixture of crushed rock and clay, and a series of low-permeability plugs and seals would be installed following a monitoring and reversibility scheme as noted above for the French concept.

Concepts from the NDA study were adopted by Radioactive Waste Management Ltd. (RWM) in their studies for thermal dimensioning, and multi-purpose canister deployment, for commercial power wastes in the U.K. (Watson et al. 2014; Dickinson et al. 2015).

EPRI Multi-Concept Review – In 2010, the Electric Power Research Institute (EPRI) published a survey of the status of geologic disposal R&D internationally that included a summary of mined geologic disposal concepts based on the NDA study described above, while advancing the descriptions of the concepts (EPRI 2010). Notably, for generic studies of this type the EPRI authors recognized that

> "...internationally there have been numerous repository concepts developed for a wide variety of host rocks. Consequently there is a considerable knowledge base and design flexibility that could aid in the rapid and cost-effective implementation of a safe repository concept rather than necessitating new design, testing and construction development programs."

Although the EPRI (2010) study focused on disposal of CSNF, the same statement applies to a defense repository. For generic studies there are numerous concepts available for which safety, engineering and cost considerations have been considered. The range narrows somewhat when the geologic medium is specified, i.e., for crystalline rock, as summarized in Table 2-1. Concepts 1 through 5 from Table 2-1 have been previously investigated for use in crystalline media. The use of concrete buffer/backfill materials or steel waste packages in crystalline media is presently much less technically mature as indicated.

Table 2-1. Key features and variants for geologic disposal concepts (after EPRI 2010), with discussion of relevance to a defense repository.

Key Feature	Variants	Implementation in Crystalline Media
In-tunnel (borehole)	1. Vertical borehole	Relatively mature, KBS-3V concept for disposal of CSNF or HLW in crystalline media (Figure 2-5).
	2. Horizontal borehole	Similar to KBS-3V but with short, slanted or horizontal emplacement boreholes (Figure 2-5). Developed for clay media (stratigraphically limited) but could be adapted to crystalline, with less excavated volume than KBS-3V.
In-tunnel (axial)	3. Short-lived waste package (corrosion allowance)	A thick-walled steel waste package, self-shielding, placed on plinths of compacted bentonite, and surrounded by bentonite backfill (either blocks or pellets) was proposed by the Swiss crystalline R&D program for disposal of vitrified HLW (NAGRA 1994) (Figure 2-6).
	4. Long-lived waste package (corrosion resistant)	A corrosion-resistant waste package with low-permeability backfill was proposed by AECL for disposal of spent fuel in crystalline rock in Canada (Johnson et al. 1994; Simmons and Baumgartner 1994) (Figure 2-6).

In-tunnel (axial) with supercontainer	5. Small working annulus	Relatively mature KBS-3H concept for disposal of supercontainers (corrosion resistant waste package, buffer, and handling shell) in long horizontal boreholes in crystalline media (Posiva 2012a,b) (Figure 2-7).
	6. Small annulus + concrete buffer	Concrete buffer and backfill would extend the lifetime of steel waste packages by passivation, while simplifying EBS construction. Under development for application in clay media (EPRI 2010) (Figure 2-7).
	7. Large working annulus	Mined opening sized to accommodate emplacement equipment. Handling of moisture-sensitive compacted bentonite blocks is problematic, so pelletized backfill would be used, but with a prefabricated compacted clay buffer. Low technical maturity (Figure 2-7).
Caverns with cooling and delayed backfilling	8. Steel waste package + clay backfill	Highly retrievable scheme with steel waste packages, in higher-strength rock (e.g., crystalline). Requires heat removal (e.g., active ventilation) for up to 300 years, prior to backfilling with clay-based material at closure. Low technical maturity (Figure 2-8).
	9. Steel or concrete container+ cement backfill	Highly retrievable scheme with steel waste packages, in higher-strength rock (e.g., crystalline). Requires heat removal (e.g., active ventilation) for up to 300 years, prior to backfilling with pumpable, flowing clay-based or cementitious material at closure. Low technical maturity (Figure 2-8).
Other concepts	10. Mined repository with matrix of deep boreholes	Emplacement in a 3D array of vertical boreholes drilled from underground galleries, evaluated for crystalline rock and salt domes (EPRI 2010). Heat dissipation would be less efficient than a 2D array. Installation of buffer material around packages, or drilling large-diameters and handling supercontainers, could be challenging. Low technical maturity.

11. Hydraulic cage around a cavern repository	Evaluated by the Swedish PASS program (SKB 1993) for use in settings with potentially important hydraulic gradients. Modifed by EPRI (2010) for a cavern-type repository. Low technical maturity.
12. Very deep boreholes (from the surface)	Evaluated previously in Sweden and the US, and currently being actively investigated (Brady et al. 2009). Could be adapted to defense waste canister sizes (Rigali et al. 2016).

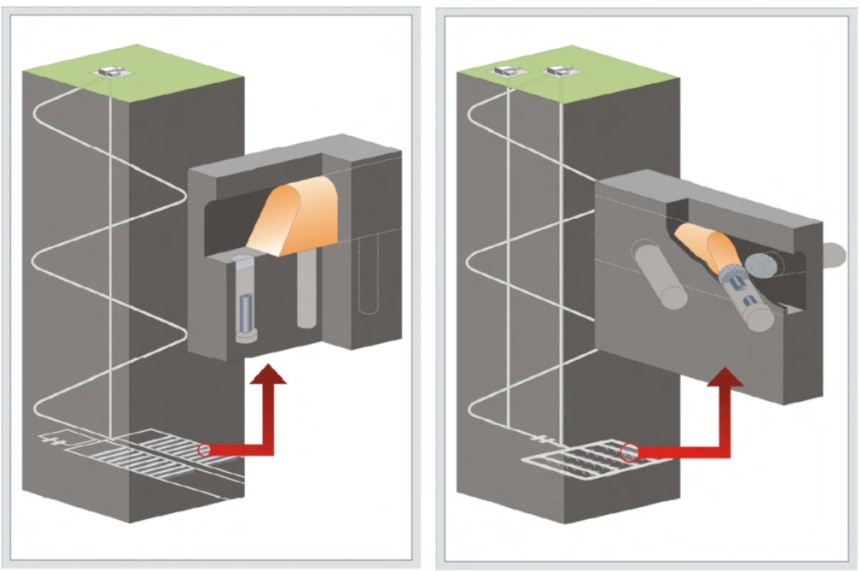

Figure 2-5. Disposal concepts for in-tunnel (borehole) emplacement (after EPRI 2010): (left) vertical borehole concept such as KBS-3V, and (right) horizontal or slant holes.

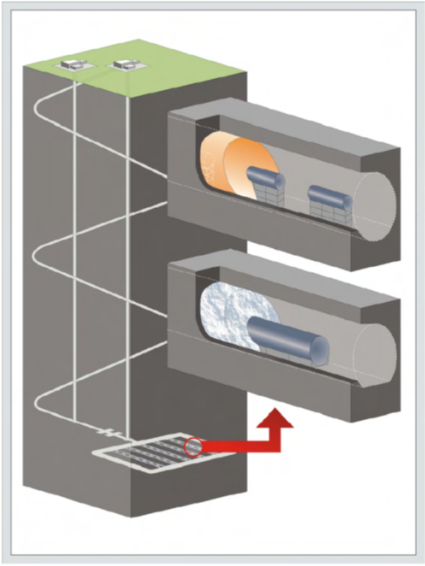

Figure 2-6. Disposal concepts for in-tunnel (axial) emplacement (after EPRI 2010): (upper) corrosion-allowance waste package, and (lower) corrosion-resistant waste package, both with low-permeability backfill.

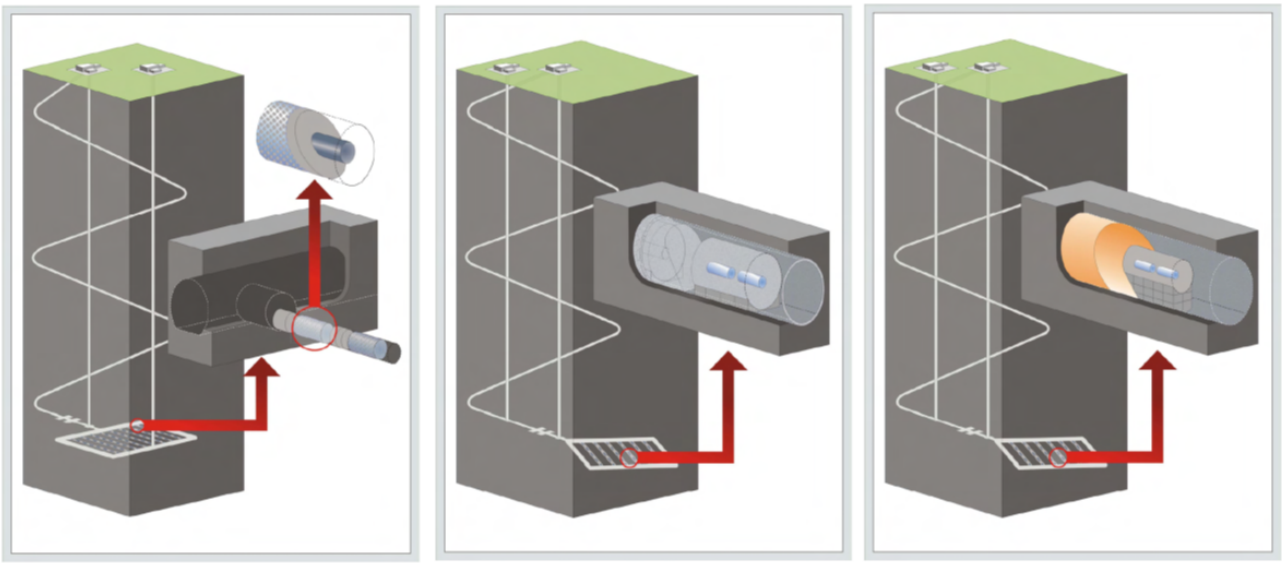

Figure 2-7. Disposal concepts for in-tunnel (axial) emplacement with supercontainers (after EPRI 2010): (left) corrosion-resistant packages with clay-based buffer, in long near-horizontal boreholes (KBS-3H); (center) packages with lifetime depending on contents, and concrete buffer and buffer; and (right) corrosion-resistant packages with clay-based buffer and backfill.

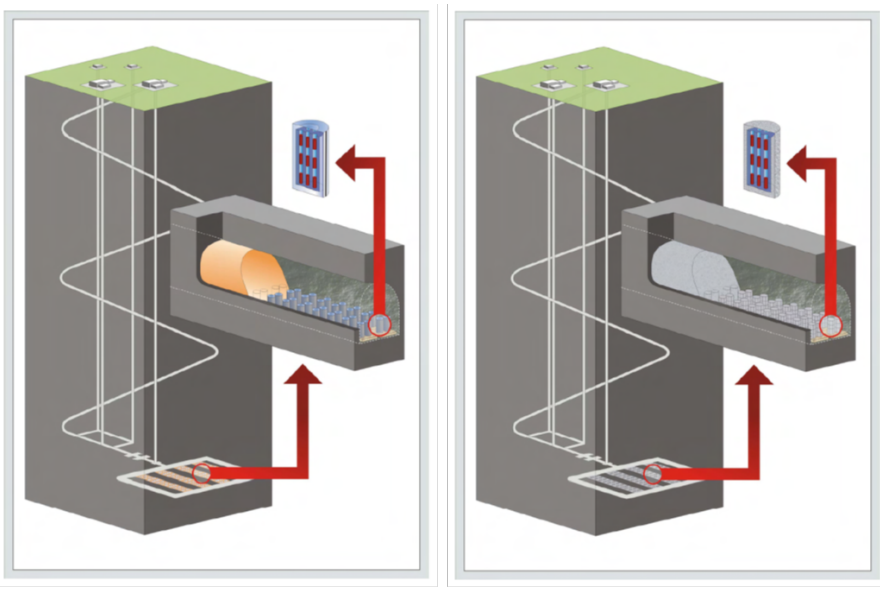

Figure 2-8. Disposal concepts for caverns with cooling and delayed backfilling (after EPRI 2010): (left) steel waste packages with clay-based buffer/backfill, and (right) steel or concrete packages with clay-based or cementitious pumpable buffer/backfill.

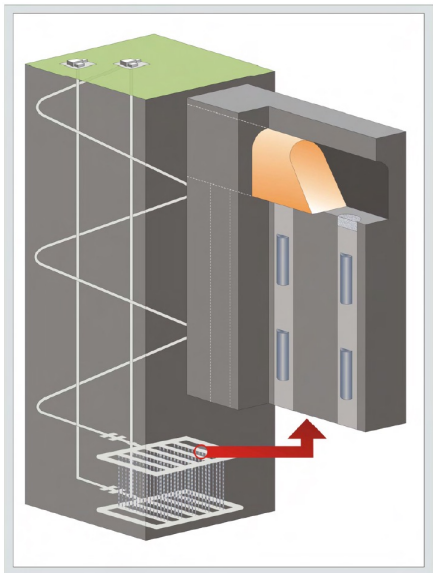

Figure 2-9. Disposal concepts for a mined repository with a matrix of deep underground boreholes (after EPRI 2010).

Geologic Disposal Concept Reviews in the US – Conceptual studies for defense wastes have been performed recently for the US Department of Energy (SNL 2014; Hardin et al. 2012). These studies have identified reference disposal concepts for crystalline media as well as clay/shale and salt. The idea of "enclosed" vs. "open" disposal concepts was introduced, to accommodate waste packages with greater heat output. Waste packages with more than approximately 1.7 kW output at the time of disposal cannot be enclosed in a clay-based buffer without exceeding a buffer temperature limit of 100°C. This limit is the same one used for KBS-3 concepts, and is a practical limit for disposal

of defense wastes in crystalline rock with clay-based buffers. The alternative open concept is to emplace hotter waste packages, ventilate for decades underground until the heat output has decayed, and then install buffer/backfill around the packages.

The 1.7 kW limit is easily met for more than 90% of the HLW glass canisters and DSNF canisters in the DOE inventory that emit less than 300 W per canister (DOE 2014a). A small percentage emit up to 500 W, and relatively few DSNF canisters emit up to 5 kW. Heat output more than a few hundred watts per canister is dominated by short-lived fission products that could be managed by decay storage.

For cooler waste forms such as HLW glass and DSNF, the DOE studies identify variants of the KBS-3 concept as flexible options. Multiple disposal concepts may be appropriate for a particular geologic setting, e.g., crystalline media below the water table. Disposal concepts have variants, and several may be combined in one repository, for different waste forms or to respond to new information. For generic studies (such as this one) it may be beneficial to maintain multiple concepts as options, without further specification until site-specific information is available.

2.1.3 Pros and cons of crystalline media

A summary of advantages and disadvantages associated with repository development in crystalline rock was proffered by SNL (2015), and is presented here with modifications:

Pros

- There is significant world-wide experience with crystalline media, particularly with the Swedish and Finnish repository programs (granite has also been studied in France, Spain, Japan and the US).
- Rock strength and the stability of openings enhance the feasibility of borehole emplacement, because boring technology is readily available and boreholes remain stable. Also, rock strength and stability allow large underground openings needed for handling of large, heavy waste packages (with any mode of emplacement).
- Rock characteristics are generally favorable for extensive tunneling by a range of blasting and mechanized methods, and for the construction and operation of shafts and ramps.
- The large size of potential cratonic settings could support a large repository layout, including large vaults and multiple panels for different types of waste.
- Groundwater may be stagnant and ancient in low-permeability host rock, and thereby resistant to advective movement due to changes in surface hydrology (e.g., glaciation).
- Tectonically quiescent cratonic settings are not prone to faulting or seismicity, even though in situ stresses may be higher than in other geologic settings. A notable exception is the effects from isostatic rebound due to continental ice sheets, where they formed (and retreated) in the Pleistocene epoch, and may do so again in 10^5 to 10^6 years.
- Future retrieval of waste packages could be readily accomplished because of the stability of underground excavations.

Cons

- Low permeability buffer and backfill are needed throughout the repository to limit water movement in repository openings after permanent closure.

- The use of clay-based buffer materials imposes limits on the heat output of waste packages, which for some waste types (e.g., some Naval fuel and other DSNF) means that longer decay storage time is needed.
- The safety case for repository systems in crystalline rock relies heavily on waste package containment lifetime especially for waste forms and radionuclides that are readily mobilized in groundwater. Hence, packages may cost more and may be heavier and more difficult to handle.
- Radionuclides may be readily transported by colloids in the flow channels associated with fracture networks.
- The likelihood of continental glaciation in the future for some cratonic settings, means that the effects on subsurface temperature, groundwater composition and flow, and faulting need to be considered in performance assessment.
- Groundwater may be relatively fresh (i.e., not chloride brine) so that there is potential for post-closure criticality of breached, then flooded DSNF waste packages. To make criticality very unlikely as defined in 10CFR63.102(j) requires engineering measures (e.g., costly long-lived neutron absorbers) for such waste forms. Uncertainty as to the fissile content and configuration of DSNF could lead to conservatism that increases the use of neutron absorbers.

2.2 Disposal Concept Selection for Crystalline Media

A generic disposal concept for a defense waste repository in crystalline media will be used to evaluate potential performance of the disposal system, particularly: 1) operational safety; 2) post-closure waste isolation; 3) engineering feasibility; and 4) rough-order-of-magnitude cost. When site-specific information becomes available the concept may be revised, and the system performance re-evaluated. This is especially important for post-closure waste isolation performance because of the wide range of contributions possible from natural barriers in different geologic settings. For generic studies this means that natural site characteristics could have a dominant influence on waste isolation performance of the system, and it would be inappropriate to over-specify engineered barriers in the disposal concept. To be meaningful, optimization of tradeoffs between the cost and complexity of engineered barriers, and the performance of natural barriers, should be deferred until site-specific information is available.

The discussion below is focused on as-built configuration of engineered barriers, and not on the methods of construction and operation used for their implementation. Thus, the phases of implementation including characterization, engineering design, licensing, procurement, construction, operation, decommissioning, closure, and monitoring, are not considered. Such considerations will be important in future analysis of overall repository project cost.

2.2.1 EBS design features available for crystalline host media

As observed in a study of using the KBS-3 concept for disposal of DOE-owned wastes (SKB 2013) selecting design features for disposal concepts ("optioneering") can be approached at different levels. At the system-level factors such as interim storage for logistics or cooling, security and safeguards, and even the use of waste form processing or transmutation may be considered. At the engineered barrier level "optioneering" involves choices among waste forms, packaging options, etc. This study is focused on these EBS features, while recognizing some key aspects and assumptions about a defense repository:

- The depth of the repository will be nominally 500 m similar to the KBS-3 repositories being developed in Sweden and Finland.
- Much of the defense waste is vitrified HLW, which will already have been processed for disposal using methods that have already been determined (i.e., borosilicate melter technology). Thus, most HLW forms have been selected already.
- The vitrified HLW, and much of the DSNF and derived waste forms, are projected to have low heat output at the time of disposal (less than 300 W per canister).
- A notable exception (although a minor fraction of total HLW) is the Idaho calcine bulk waste which may be disposed of directly, vitrified in a melter, or hot-isostatic pressed (DOE 2014b). Disposal for these options is discussed in Section 2.3. Another exception is the Cs-Sr waste at Hanford, which also has multiple disposal pathways (DOE 2014b).
- DSNF comes in various forms, most of which can be disposed of directly, but a few of which will require processing or special packaging that is not yet fully specified (e.g., electrometallurgical treatment; DOE 2014b). DSNF and any derived waste forms will be augmented with neutron absorbing material and sealed in canisters before shipment to a repository.
- Options for neutron absorbers include Gd-bearing shot as intended for the proposed repository at Yucca Mountain (DOE 2008), borated stainless steel as proposed for standardized CSNF canisters (ORNL 2015), or other chemically resistant materials such as ceramic boron carbide.
- Neutron absorber materials, if used, will provide for control of internal waste package criticality, but external criticality cannot be readily controlled by engineered features outside the waste package. As recommended (SKB 2013) the site will be selected with geochemically reducing conditions that are favorable to external criticality control (by limiting fissile actinide solubilities) as well as limiting radionuclide release and transport.
- Transmutation can be neglected as a waste management solution because of the high cost, energy consumption, and the large quantities of DOE-owned wastes already in inventory.

The principal EBS design features from which a disposal concept can be developed, were identified in another "optioneering" review (EPRI 2010), and are presented here with additions:

- Waste package material, mainly the outer layer exposed to the disposal environment, which may be of corrosion allowance or corrosion resistant types, and the methods used for fabrication and treatment.
- Buffer material to be placed around the waste packages.
- Engineered components such as steel liners or rails, that facilitate EBS construction or waste package emplacement, or closure, and are left in place.
- The geometrical configuration of the EBS, including component thicknesses, package and tunnel spacings, and repository layout.
- Far-field EBS components including liners and inverts that are left in place, backfill materials for openings, and seals/plugs where needed in tunnels, shafts, and boreholes.

Waste Package Materials and Concepts – Waste packages (i.e., overpack for pre-canistered waste, often called "canisters" in the international literature) are designed for an expected containment lifetime in the disposal environment. The targeted lifetime depends on a safety strategy that is specific to the waste type, site characteristics, etc. The strategy should include a multi-barrier performance allocation that credits contributions by different barriers toward waste containment and attenuation, in meeting performance objectives. For waste packages, published assessments have shown that containment lifetimes on the order of 10^4 to 10^5 years or longer are possible, taking into account uncertainty in disposal environments and the rates of degradation processes. This range corresponds to the "short-lived" and "long-lived" waste packages identified in previous reviews (NDA 2008; EPRI 2000).

Short-lived packages would be made of corrosion allowance materials such as steel or cast iron, in sufficient thickness to provide the needed lifetime (e.g., 10 to 30 cm, depending on the aggregate rate of surface retreat from degradation processes). Corrosion resistant materials for long-lived packaging include (SKB 2013; CRWMS M&O 1999):

- Copper (oxygen free)
- Titanium
- Nickel-based alloy (e.g., alloys in the Hastelloy® family)
- Steel canister (where the corrosion rate is less than 1 μm/yr)
- Ceramic canister (e.g., Al_2O_3)
- Ceramic coatings (e.g., hot sprayed) on low-cost substrates such as steel

Note that copper is corrosion resistant in anoxic conditions, but is identified as a corrosion allowance material in oxygenated water (Johnson et al. 1994). Corrosion resistance is defined operationally, i.e., by application. Steel can be corrosion resistant if the effective corrosion rate is limited by the availability of reactant water (corrosion products or buffer), or if the steel surface is passivated (alkaline buffer).

The range of available waste packaging concepts includes those described above, and also the unique concepts that were developed previously for the US program (DOE 2008, Section 1.5). The concepts developed in Sweden, Finland, Switzerland and Canada would produce waste packages with capacity for four pressurized water reactor fuel assemblies (or either 9 or 12 from boiling water reactors). These packages would be approximately 0.82 m to 1.05 m in diameter. The US concepts would allow for multiple canisters to be grouped in larger packages (Figure 2-10) which is feasible for "enclosed" emplacement modes in crystalline rock because of the low heat output of most defense waste.

Additional details on the DOE-Managed waste groups, disposal pathways, and options for waste configuration and packaging are presented in Appendix A - Packaging Concept for Defense Waste Disposal in Crystalline Rock.

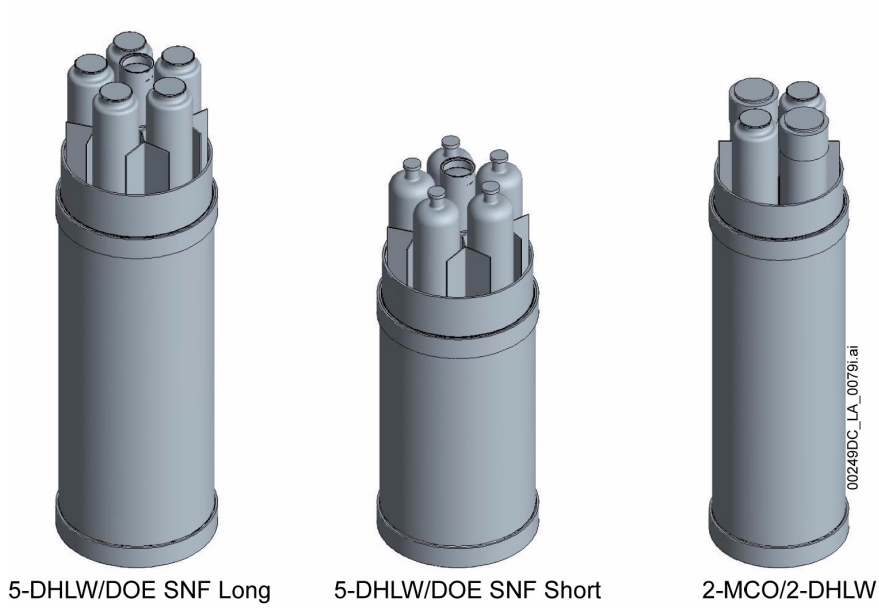

Figure 2-10. Multi-canister package arrangements (from DOE 2008, Figure 1.5.2-2).

Buffer Materials – Proposed buffer materials fall in two general categories: clays and cements. The definition of "buffer" is taken here to be the material in direct contact with waste packages. However, it may also include engineered backfill materials such as could be used to fill all the access and service tunnels in a repository (EPRI 2010).

The swelling capacity of dehydrated clay when it comes into contact with moisture (mainly due to smectites) can fill gaps around the packages and meet several functional requirements (SKB 2011), including

- Limit advective transport (maintain swelling pressure greater than 1 MPa, so that hydraulic conductivity is less than 10^{-12} m/sec)
- Dampen shear movements from faulting of the host rock (limit swelling pressure so that hydrated bulk density is less than 2,050 kg/m^3)
- Prevent canister sinking by maintaining swelling pressure greater than 0.2 MPa
- Inhibit microbial activity by maintaining sufficient swelling pressure to maintain a minimum buffer density (e.g., 1,950 kg/m^3)
- Limit pressure on the waste package and the host rock (swelling pressure less than 15 MPa)

Other requirements on the buffer include minimum and maximum pH values, and limited concentrations of chloride and sulfide (SKB 2011). All of these requirements can be met using dehydrated, compacted smectite clay in readily available forms. These materials are not pumpable, because in pumpable slurry form they lose their capacity for further swelling. Materials (including clays) that do not exhibit strong swelling behavior do not meet the buffer requirements, such as minerals in the illite, kaolinite and vermiculite groups.

We note that the clay buffer will constitute the major thermal resistance in dissipation of heat from waste packages, particularly from DSNF (Hardin et al. 2012). Admixtures of sand and graphite have been tested for the effects on thermal conductivity (Jobmann and Buntebarth 2009). However, heat dissipation is not expected to be problematic for defense wastes (except Naval fuel) as discussed in Section 2.4.2.

Cementitious materials could also be used as proposed for closure of large vaults containing many waste packages (Dickinson et al. 2015; Watson et al. 2014). Pumpable cements based on ordinary Portland cement would be used in conjunction with steel waste packages. Cementitious materials are not thermodynamically stable in the disposal environment (much less so than clays), and their potential longevity has not been established.

Backfill Materials – For a repository in crystalline rock and below the water table, the primary functions of backfill are to limit groundwater movement through repository openings, and to constrain the buffer from expanding out of the emplacement boreholes in the KBS-3V concept (and concept 2 from EPRI 2010). Published concepts achieve low backfill permeability using dehydrated, compacted particles of swelling clay in combination with sand or crushed rock, to completely fill openings (Johnson et al. 1994; SKB 2011). Swelling pressures of up to 3 MPa are reported depending on the volume fraction of prepared clay compared to void space.

Backfill functional requirements could possibly be met by non-swelling materials such as silts, silty sands, and loess, or engineered materials such as cemented backfill, paste fills, or siliceous fly ash (Hardin and Voegele 2013). Lacking swelling behavior, such materials would be more difficult to emplace while limiting voids, and could be prone to settlement.

Emplacement Modes – The survey of published disposal concepts (Section 1.1.2) has identified a reasonable range of workable concepts for mined repositories, including borehole emplacement (vertical, slant, horizontal), in-tunnel axial, and disposal vaults containing many waste packages. The KBS-3V mode was previously recommended for US defense wastes (SKB 2013) with the possibility of switching to KBS-3H in the future based on results from testing being conducted in Sweden and Finland.

Importantly, with the exception of the large vaults, these are "enclosed" modes that do not require repository ventilation after emplacement because of the limited waste heat output. Closure for the "enclosed" modes will involve backfilling shafts, ramps, and any remaining open access and service tunnels, and the installation of seals and plugs (including boreholes). For the disposal vaults which are "open" emplacement modes, closure would begin with installation of the buffer/backfill in the emplacement areas.

Repository Panel Organization – For different waste types in the same repository, the most important panel option is whether to build out separate panels in the repository, or combine waste types in the same tunnels or borings. With separate panels the operational requirements such as opening size, ground support, waste package conveyance, shielding, ventilation, and closure activities can be optimized to a greater extent, and operations can be more flexible.

The waste management system including the repository will produce low-level waste, with the possibility of activated metals. Ancillary space in the repository, such as access and service tunnels, can be filled with such waste at the time of repository (or panel) closure. The volume of such tunnel space is likely to be ample for ancillary wastes (Hardin et al. 2012).

Radiological Shielding – Self-shielding waste packages could make underground operations significantly safer, and less costly by reducing reliance on remotely operated equipment. Shielding for HLW and DSNF can be provided by the waste package, or by the layers contained in supercontainers. To provide shielding for extended worker access, wall thickness of 20 to 30 cm for metallic packages is required (less thickness for lower flux of penetrating radiation). To achieve the same shielding with highly compacted clay buffer material, buffer thickness on the order of 50 to 100 cm would be needed (depending on credit taken for the waste package). The KBS-3 waste packages described previously do not provide significant shielding for the spent fuel they contain (Fairhurst 2012).

Another option is to provide sufficient shielding to allow emergency access, for example to remove malfunctioning equipment. Extra shielding can be used on the waste package ends as is done for dual-purpose canisters for CSNF (Greene et al. 2013). Reducing shielding to the equivalent of 15 cm of steel, could reduce the buffer thickness in a supercontainer to approximately 40 cm. Finally, HLW or DSNF that contains significant amounts of transmuted actinides could require an additional layer (e.g., a few cm of polyethylene) for shielding from neutrons emitted by spontaneous fission.

Conveyance and Transfer of Waste Packages Underground – Transport of waste packages from the surface to the underground facility has been reviewed previously, and several options exist some of which are in service at mines or repository facilities (Fairhurst 2012). For selecting an EBS concept the relevant aspect is the maximum package weight, particularly for repository geologic settings that require waste transport in shafts or steeply dipping ramps. Shaft hoists for transport of waste packages with shielding, and weight totaling from 85 to 175 MT have been described (Hardin et al. 2013a; 2013b).

For transfer of each package to its final disposal position, so-called deposition equipment has been developed by repository R&D programs. Notably, extensive prototype design and demonstration testing for facilities in crystalline rock have been conducted for the KBS-3V and KBS-3H concepts (SKB 2010).

For larger waste packages and in-tunnel axial emplacement, transfer concepts have been developed for the US program (DOE 2008, Section 1.3.4). For transfer and emplacement of large, heavy waste packages (e.g., nominally 2 m diameter, more than 50 MT) an important design choice that impacts the EBS is whether to run on rails, or directly on the rock, or on a surface of concrete or compacted ballast. The choice depends on loads (e.g., seismic loading), rock strength and breakage behavior, and whether steel, concrete, or ballast must be removed when the tunnels are loaded and backfilled.

Repository Ventilation – The ventilation required for repository operations should not directly impact selection from among "enclosed" EBS concepts for a defense repository. Packages of defense HLW or DSNF will produce little heat (except for Naval SNF) and "enclosed" modes will be backfilled concurrently with package emplacement. Thus, ventilation for heat removal is not possible after emplacement. This reduces the numbers of shafts and other openings needed for ventilation (e.g., as discussed by Hardin et al. 2012). By contrast, for the disposal vault concepts involving many waste packages emplaced in large rooms (Table 1-1, concepts 8 and 9), extended repository ventilation would be needed for heat removal. This would increase the number of shafts and other openings needed for ventilation.

Prefabrication Concepts – Prefabrication would involve assembling each waste package and its buffer into one unit at the surface, and transporting it underground for disposal. The advantages include better quality control, added shielding, and reduced cost. Disadvantages are mainly related to the size of the resulting supercontainers, and the measures needed to safely transport and handle them underground. Because of the size (100 MT or more) the in-tunnel (axial) emplacement modes shown in Table 1-1 would likely be used. The importance of self-shielding that allows worker access to emplacement areas during operations (or partial shielding for emergency access) should not be understated.

The "2nd generation" prefabrication concepts proposed by McKinley and others (1997; 2001; 2006) include the following:

- Integrated waste package – Steel HLW pour canister surrounded by compacted clay, inside a 1-cm thick steel sheath. Total weight for a single HLW canister: 10 to 12 MT.

- Multi-component module – Layered assembly of clay, sand, and clay-sand mixtures, around a steel pour canister, and enveloped by a geotextile layer and a steel handling shell. Total weight for a single HLW canister: 20 to 40 MT.
- Prefabricated EBS module – Combining three HLW pour canisters, buffer, and handling sheath, and weighing approximately 90 MT (Hardin and Sassani 2011).

Concept #7 in Table 2-1 presents one claimed advantage of supercontainers, that a more robust buffer of compacted clay blocks can be deployed around the package, surrounded by a less dense pelletized backfill that is cheaper and easier to emplace than blocks. The efficacy of the buffer may deteriorate with time, however, by homogenization caused by differences in swelling pressure when the EBS hydrates.

For large packages such as the multi-packs shown in Figure 2-10, prefabrication would add considerable weight. For example, to add a 40 cm thick buffer around a package that has diameter of 2 m and length of 5 m (and weight of 50 MT), with a 1-cm steel handling sheath, would make the total supercontainer weigh about 100 MT.

2.2.2 Criteria for crystalline repository concept selection

Generic defense repository evaluations should: 1) provide input to waste management policy; 2) point out technical differences between disposal of defense wastes and other radioactive waste in the US; and 3) focus attention on R&D opportunities pertaining to defense waste disposal. For impact, generic disposal concepts should be widely applicable to different hydrogeologic settings even within a classification such as crystalline rock. Accordingly, they should be simple and technically mature, and they should benefit from international progress in repository R&D.

The Swedish repository program provides an instructive example of concept selection and development. Disposal concepts were selected in the 1993 PASS review, which selected a conservative concept, rejecting the alternatives discussed previously because of technical maturity questions and site-specific applicability questions (Section 1.1.2). Even so, the possibility for improvement is reflected in ongoing R&D on the KBS-3H concept, which would be an implementation of the Very Long Holes concept. A lesson for US defense waste repository evaluations is to include the KBS-3V concept, taking benefit from extensive R&D in Sweden and Finland while also identifying improved concepts, especially those with adaptations to specific defense waste characteristics.

Deep borehole disposal is not well suited to greater-volume DOE-owned waste forms such as vitrified HLW and DSNF because of technical maturity questions and the number of boreholes needed. However, deep borehole disposal in crystalline rock could be appropriate for more volume-limited waste forms, and an R&D program is underway as an alternative to KBS-3 and other mined repository concepts.

Passing mention should be made of historical evaluations of more exotic disposal concepts. Such concepts as seabed disposal, space disposal, rock melting, liquid injection in deep boreholes, etc. have been previously evaluated and found to be impractical (or in violation of international treaty in the case of seabed disposal) (Rechard et al. 2011).

The particular characteristics of defense wastes that should be taken into account in disposal concept development include

- Pre-canistered – Disposal concepts should accommodate HLW glass pour canisters and DSNF in sealed canisters. The great advantage is “clean” repository operations

whereby waste forms are never directly exposed. For DSNF this means that canister design must include neutron absorbing materials as required for disposal.

- Lightweight – Canisters weighing on the order of 5 MT can be readily combined into larger packages for disposal, as appropriate, to simplify handling and reduce costs.
- Low heat output – The low heat output of defense waste (esp. relative to CSNF) could permit smaller spacing between tunnels and between waste packages. Geomechanical stability of openings, or operational logistics, may instead constrain drift spacing. Also, low heat output could permit disposal of multiple canisters in a single waste package, while meeting thermal limits. With low heat output it is possible for the repository to have two or more overlying emplacement levels, reducing the facility footprint if needed (for CSNF disposal multiple levels have been found to be ineffective for heat dissipation; CRWMS M&O 1999).

The characteristics of crystalline geologic settings that could be important for repository siting and development include (see EPRI 2010, Appendix B):

- Superior heat dissipation – Host rock thermal conductivity on the order of 2.5 W/m-K or greater is better than all alternatives except salt (Hardin et al. 2012).
- Low hydraulic conductivity – Typically the intact rock matrix will have hydraulic conductivity less than 10^{-12} m/sec, and the bulk medium may be only 1 to 2 orders of magnitude greater depending on the nature of fracturing. Major through-going discontinuities (e.g., faults) would be avoided and sealed off from the repository.
- Low groundwater flux – Low flux may be present in flat terrain or proximal to large bodies of water (which tend to limit horizontal pressure gradients).
- Construction flexibility - Crystalline rock has strength and stability, giving unsurpassed flexibility in underground opening design, construction and maintenance.
- Geochemically reducing – Chemical conditions may inhibit corrosion and limit mobility of release radionuclides, but are somewhat site-dependent, and may be correlated with the presence of ancient brines (a potential complicating factor).
- Human intrusion – The potential is low, being limited to possible future mineral exploration or water production (guidelines in 40CFR191, Appendix B).

Some of these would not necessarily control EBS design, however, they do mean that a defense repository in crystalline rock can be compact, that underground openings should be backfilled with long-lasting low-permeability material, that shafts or ramps can be used for access, and that openings can be sized to accommodate operations. The possibility of advective flow through the repository or nearby features means that more reliance will be placed on integrity of the waste package, so that the package should be corrosion resistant (or slowly corroding).

Crystalline disposal concepts have been shown to have higher costs than for other media (Hardin et al. 2012; SRNL 2015), so cost reducing measures are appropriate. However, cost for generic disposal concepts can be estimated only as a rough-order-of-magnitude, and comparisons between

concepts are subject to large uncertainties. Accordingly, cost should be approached cautiously, and concept selection should be revisited with site-specific information when it becomes available.

Repository cost estimates have shown that waste packaging is likely to be the single most costly category of EBS components (in some estimates, a component of operations cost; SRNL 2015). There are several reasons for this: 1) costly materials (metals, alloys) are used in large quantities; 2) waste packages must achieve complete containment, requiring significant efforts in fabrication, and quality control and quality assurance; 3) final fabrication (e.g., welding and weld-treatment after loading with waste) must be done remotely in hot cell facilities; 4) waste handling facilities must be engineered and operated so as to prevent accidents and mitigate consequences; and 5) packages are heavy. These factors mean there is a unit cost per waste package regardless of its size or material, that pays for quality management, facilities, support operations, and so on. Hence, both the total number of packages and the materials used are important factors in total system cost, with comparable effects.

Clay-based buffer/backfill materials and the waste package are likely to be principal engineered barriers in a crystalline repository (SKB 2011). Selection criteria for waste packaging were developed by AECL for its crystalline disposal concept for spent reactor fuel (Johnson et al. 1994) and are summarized below:

- Structural – Waste packages should withstand short-term loads during handling, transport and emplacement, and long-term loads after emplacement.
- Fabrication – Packages should be amenable to manufacture and inspection to ensure specified quality.
- Containment – Waste packages should resist containment degradation, which is expected to occur principally by corrosion.
- Technical feasibility – Package design, materials, and all operations needed for manufacture, loading and emplacement, should be feasible with reasonably available technology.
- Flexibility – Waste packaging should accommodate a range of waste forms and facilities, and be adaptable to site-specific constraints.

The authors then discuss the ideal container, which would be thermodynamically stable in water under oxidizing or reducing conditions (Johnson et al. 1994). Unfortunately, only rare and/or precious metals such as gold could meet this criterion, and use of such materials is infeasible. The alternative is to use metals or alloys that corrode slowly enough to ensure containment during the performance period, at sufficient thickness. Corrosion allowance materials (e.g., steel, copper) are relatively low-cost, but a greater thickness could be required. Corrosion resistant materials (titanium, nickel-based alloys) are costlier, but a smaller thickness may be required. Corrosion resistant materials are generally passive, i.e., protected by a surface oxide film, but the surface layer is susceptible to localized corrosion (e.g., pitting, crevice corrosion, stress-corrosion cracking) that can occur rapidly and is more difficult to predict.

2.3 Recommended Crystalline Repository Concepts

Two disposal concepts are recommended: a KBS-3V panel for DSNF and the hottest HLW glass, and an in-tunnel axial vault concept for large waste packages containing multiple HLW canisters. The rationale combines safety and efficiency to provide a reference solution based on international experience for use with the most radiotoxic waste form. The multi-pack solution produces waste packages of larger size, emplaced with an ample buffer of compacted, dehydrated clay. The

repository would have two types of panels, both with arrays of long, parallel near-horizontal tunnels. The DSNF panel would have emplacement holes bored 8 m into the floor at regular intervals (Figure 2-11). Other dimensions for the recommended concepts are given in Table 2-2.

KBS-3V Panel for DSNF – The DSNF canister diameter is 61 cm (24 inches), and allowing for a heavy-wall overpack, the package diameter would be nominally 80 cm. DSNF canisters would arrive at the repository sealed, with neutron absorbing materials installed.

With a buffer thickness of 35 cm, the emplacement borehole diameter would be 1.5 m. For packages that are up to 5 m long, a borehole depth of 8 m is needed (into the floor of the access drifts; SKB 2011). The center-center spacing between adjacent emplacement borings would be at least 6 m, allowing a web dimension between boreholes of 4.5 m, or three borehole diameters.

The waste package would consist of a thick (10 cm) shell of oxygen-free copper, with end plates welded at the ends. Alternatively, part of the wall thickness could be made of another material such as Type 316 stainless steel, to add strength and use less copper, if allowable under the safety case. (This may be allowable if corrosion of the copper proceeds rapidly after failure of the buffer.) The top and bottom of each waste package would incorporate a shield plug (e.g., 15 cm of steel) as discussed below.

For 4,000 waste packages (accommodating 3,716 DSNF canisters and a few hundred canisters of hottest HLW glass) the total access tunnel length would be approximately 24 km. The tunnel would be excavated using a tunnel boring machine (TBM), with minimal ground support where needed using low-profile swelling-type rock bolts (e.g., Swellex®) to keep the tunnel opening clear. After excavation the rail and services would be removed (leaving temporary lighting and ventilation). No rail or invert would be used for drilling or emplacement, only rubber-tire heavy equipment. Purpose-built transporters could run in the circular tunnel by gripping the tunnel wall low on each side. Transporters (for drilling machines, buffer installation, waste packages, and backfilling) would straddle emplacement boreholes that are drilled but not yet used.

Each emplacement borehole would be prepared by installing a plug of compacted buffer clay at the bottom, and rings of compacted clay stacked above. All clay blocks would be coated with a temporary, water soluble barrier against moisture invasion and swelling during operations (e.g., sodium silicate cement, sprayed on and dried). The package would then be transported into position, and lowered into the borehole using a shielded deposition machine. Shield plugs at each end of the package would protect workers from shine when the gamma doors on the deposition machine are opened. After emplacement, a buffer plug would be installed on top of the package, and all voids filled with pelletized clay.

At this point it would be necessary to backfill the access tunnel above, to constrain the clay buffer from hydrating and pushing up out of the emplacement borehole below. Backfill (a 50:50 clay-sand mixture) would be installed in the manner described by Johnson et al. (1994) starting with a layer that is compacted in place using standard equipment, and finishing with a crown layer emplaced pneumatically and with augers as demonstrated at the Mont Teri Underground Research Laboratory (Garitte et al. 2016). The 50:50 mixture provides resistance against erosion by groundwater flowing in intersecting fractures. In this way the emplacement operation starts at the far end of each access tunnel (which may be blind) and proceeds back to the entry.

Access tunnels can be excavated far in advance because of the superior stability of the crystalline host rock. After all of the DSNF waste packages are emplaced (and any other waste warranting this type of disposal and with the same form factor), the remaining access and service tunnels would be backfilled using the same procedure, and seals and plugs installed to close the panel.

The foregoing description is similar to the program proposed by SKB (2013) for defense wastes, but with the use of a TBM to maximize excavation speed and minimize rock damage, and a larger access tunnel diameter to eliminate the blasted notch excavation that SKB has used to swing mockup waste packages into emplacement boreholes. Other details such as rubber-tire conveyance, spray coatings to delay clay hydration, and shield plugs built into each waste package are enhancements that would need to be prototyped and demonstrated in situ just as SKB has done at the Äspö Hard Rock Laboratory.

In-Tunnel Emplacement for HLW – This concept would be similar to the NAGRA (1994) Kristallin-I concept for in-tunnel emplacement of self-shielding packages containing HLW glass, but with a different waste packaging approach. The engineering challenges with this concept are installation of the compacted clay buffer around the packages, and emplacement of a large, heavy waste package. The solution recommended here is to construct single-package vaults for each package. Supercontainers containing a single multi-canister package, buffer, and handling sheath as discussed above, would be too large and heavy for practical handling and installation.

HLW canisters would be combined in a multi-pack, with as many as five per package (Figure 2-10; DOE 2008). The basic concept of the co-disposal package proposed for a Yucca Mountain repository is adopted here, with small modifications. The canisters would be supported by a robust basket of stainless steel, inserted into a stainless steel inner vessel with 5-cm wall thickness (mainly for structural strength). Shield plugs would be installed at each end of the package within the inner vessel, to protect workers who can intervene if the remotely operated emplacement equipment malfunctions. The inner vessel would be sealed by welding, and inserted into a corrosion-resistant outer vessel (e.g., titanium or Hastelloy) with 2-cm wall thickness, so the total wall thickness would then be approximately 7 cm.

Tunnel excavation would be done by TBM for the same reasons given above. Tunnel diameter would be determined by the clearances needed for purpose-built construction and emplacement machines. Buffer thickness is ample at tunnel diameter of 3.75 m, and the buffer can be adjusted for smaller or larger tunnel diameter. For thermal calculations (Table 2-2, and Section 4) a diameter of 4.5 m was selected.

To start the emplacement process, a specialized machine would install arch segments of compacted clay, fully enclosing a 6-m section of the tunnel where the next package is to be emplaced. The machine for this purpose would be based on erectors for pre-cast concrete liner segments used with TBMs in soft rock (Hardin 2014). A steel liner tube section would then be installed in the central hole in the buffer archwork, and pelletized clay would be pneumatically emplaced to fill open spaces behind the liner (Figure 2-12).

A waste package would then be transported to the emplacement location in a shielded transporter, aligned, and pushed into the liner in a manner similar to emplacing NUHOMS® dry storage canisters into storage vaults (Figure 2-13). The transporter would run on the rock surface of the lower tunnel wall using compact, hydraulically operated, steerable wheel assemblies. The transporter would brace against the tunnel walls when necessary, using shield rams similar to a hard-rock TBM. The waste package would be provided with longitudinal skids (e.g., built up weld metal) or other features to facilitate sliding against the liner. After a package is emplaced, a buffer plug would be installed in the end of the liner, so that the drift is shielded to begin installation of the next package.

This concept could reduce the number of HLW packages from approximately 25,000 (Section 1) to as few as 5,000. Factors that would control this scaling include dimensioning of the underground openings and equipment, and characteristics of the HLW itself. Smaller waste packages could be

used (e.g., holding three canisters), or the emplacement tunnels could have larger diameter to accommodate the shielded transporter.

Shielding would be limited, mainly to limit the weight of support equipment. HLW that emits stronger gamma can be emplaced in de-rated packages with extra shielding (increasing the total number of packages) or it could be dispositioned using the KBS-3V based concept. The larger diameter packages possible with this concept would be well suited for disposal of Idaho calcine, which has high volume (equivalent to roughly 5,000 HLW glass canisters) and relatively low gamma activity.

Other features of the HLW concept are similar to the DSNF concept. Emplacement tunnels could be excavated well in advance. After emplacement operations are complete, the remaining access and service tunnels would be backfilled using the same procedure, and seals and plugs installed to close the panel.

The single-package vault concept described here is not the only design solution possible. One alternative is horizontal emplacement in a long, large-diameter boring similar to the KBS-3H concept, which has been extensively investigated (Section 2.1.2).

Another alternative is to prefabricate supercontainers around a multi-canister HLW package (which would be very heavy as discussed above) combined with handling features of the KBS-3H concept (e.g., using a water bearing to move packages along the emplacement boring).

Another option for buffer/backfill installation is to place each waste package on a plinth of compacted clay blocks, and backfill with pelletized clay using augers as demonstrated at the Mont Terri URL (Section 2.3). To follow the Mont Terri example, the waste package would be self-shielding. Buffer clay dry density of 1.5 MT/m^3 was achieved using pellets, which is significantly less than the 2.0 MT/m^3 that can be achieved with fitted blocks.

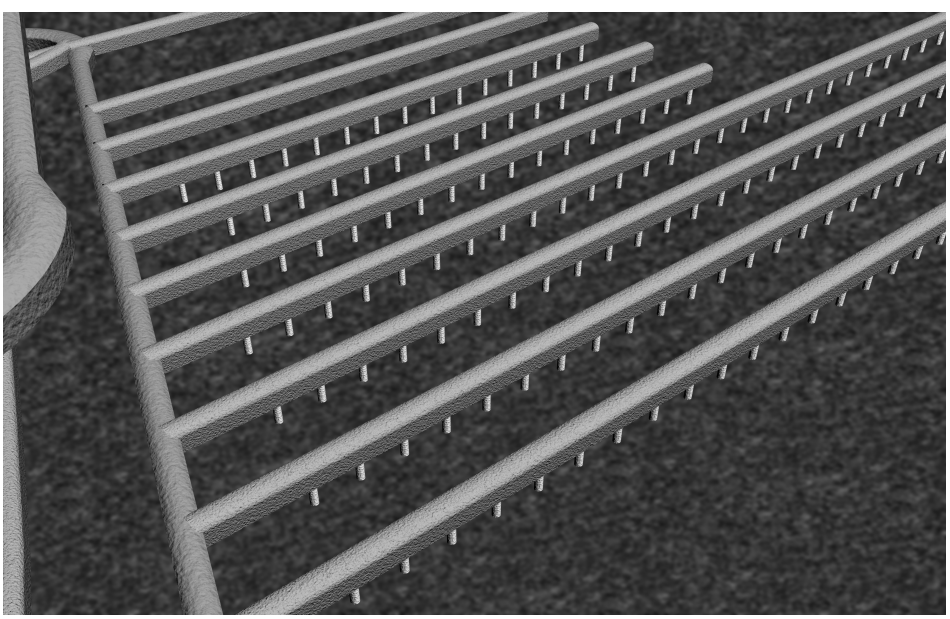

Source: http://www.posiva.fi/en/final_disposal/basics_of_the_final_disposal/backfill#.V9hTETXxVLc

Figure 2-11. Schematic of HLW and DSNF disposal areas in a repository: in-tunnel disposal (top), and vertical borehole emplacement (bottom).

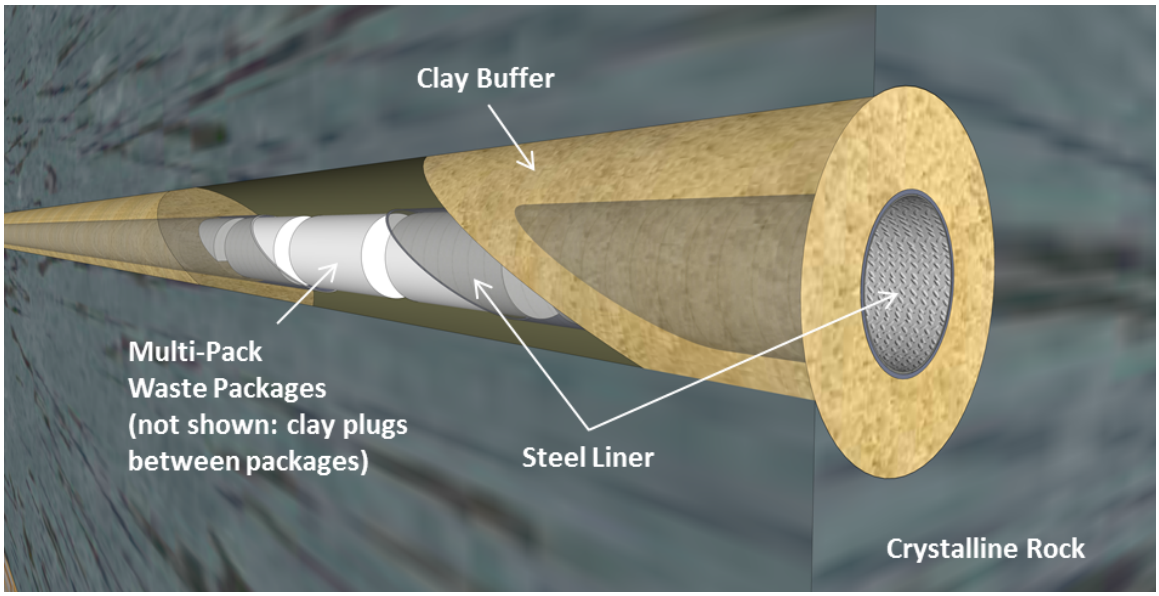

Figure 2-12. Multi-pack waste package vault for HLW packages.

Figure 2-13. NUHOMS® dry storage system with transfer cask, getting in position to push a loaded waste canister into the storage vault on the right (www.wheelift.com).

Table 2-2. Dimensions for recommended defense repository emplacement panels

Feature Dimension	DSNF Panel	HLW Panels
Emplacement opening	Short vertical boreholes (1 per package)	Long horizontal tunnels
Emplacement opening diameter	1.5 m (circular)	4.5 m (circular)
Emplacement opening depth or length	8 m deep	~100 m long
# of emplacement openings	4,000 [A]	~267 [B]
Approximate panel area by waste type	0.6 km^2	0.6 km^2
Access tunnel length	24 km access	~5 km
Access tunnel diameter	6 m (circular)	6 m (circular)
Access tunnel center-center spacing	24 m [C]	100 m minimum [D]
Package spacing center-center	6 m between emplacement boreholes	6.3 m (~1.5 m buffer between packages)
Waste package diameter	80 cm [E]	2.13 m [F]
Waste package length [G]	~4.8 m	~4.8 m
Waste package (overpack) material	Copper	Corrosion resistant [H]
Approximate weight	8.5 MT	50 MT
Buffer thickness [I]	35 cm	120 cm
Buffer material	Compacted, dehydrated swelling clay	
Backfill material	50:50 clay-sand	n/a
Analogous international concepts	KBS-3V (SKB 2011)	AECL concept for CSNF (Johnson et al. 1944)

[A] Assuming one DSNF canister or one canister of hottest HLW, per package.
[B] Assuming 5,000 packages containing 5 canisters each, with 15 packages in each emplacement opening.
[C] Allowing minimum web dimension of 3× borehole diameter.
[D] Access tunnels would form the spine in a spine-and-ribs arrangement with emplacement openings.
[E] Assume heavy-wall overpack around a 61-cm diameter canister.
[F] Based on Yucca Mtn. co-disposal package (DOE 2008).
[G] Nominal based on 15-ft. canisters; may vary.
[H] For example, titanium or Hastelloy 2-cm outer layer; 5-cm stainless steel inner layer; and basket.
[I] Gaps to be infilled with clay particles or pellets.

2.4 Summary

The recommended HLW and DSNF disposal concepts can likely be demonstrated to achieve safety, engineering feasibility, thermal management, and post-closure criticality control objectives.

Safety – First among these is safety, including pre-closure safety of workers and the public, and post-closure isolation of wastes from the environment. The concepts selected here are similar to working concepts that have been demonstrated in underground research laboratories internationally. As discussed in Section 1.3, underground operations for the KBS-3V concept have been tested extensively at the Äspö Hard Rock Laboratory in Sweden, and operations similar to the HLW concept presented here were simulated in the Full-scale Experiment at the Mont Terri Underground Research Laboratory. It is expected that all aspects of waste conveyance, handling and emplacement will be similar to those already tested.

Post-closure waste isolation in crystalline rock has been analyzed generically (Mariner et al. 2011), but more importantly it has been assessed in a regulatory context for a specific site (SKB 2011).

The results have identified processes that could lead to repository degradation (e.g., glaciation, buffer erosion, waste package corrosion) but show that regulatory performance objectives can be met.

Engineering Feasibility - Handling and packaging of waste packages in surface facilities at the repository or at upstream installations, are within the state of available technology and current practice.

Options exist for surface-to-underground waste package transport in shafts or ramps as surveyed previously (Fairhurst 2012). These waste transport options are technically feasible although some systems, if implemented for a defense repository could be the largest of their kind. The choice is likely to depend on site-specific geology and local experience.

Underground excavation in crystalline rock can be done by drill-and-blast or by TBM, with excellent results that depend on the rock quality. Emplacement equipment has been demonstrated for the KBS-3V waste package and the KBS-3H supercontainer, which are similar to the DSNF and HLW concepts presented here.

Some of the concept details proposed here would differ from the KBS-3 concepts, including circular emplacement tunnels and rubber-tire equipment riding on the tunnel walls. If successful these differences will simplify construction and reduce cost, but demonstration in an underground laboratory is needed.

Postclosure Criticality Control – Fissile radionuclides in sufficient abundance for criticality would exist only in pre-canistered DSNF. Requirements for addition of neutron absorbers or other measures to control criticality of flooded packages for thousands of years, would be determined and implemented at upstream facilities where the DSNF canisters are prepared and sealed.

3 ENGINEERED BARRIER SYSTEM CONCEPTS FOR A DEFENSE REPOSITORY IN SALT

This analysis reviews repository concepts and selects generic (non-site specific) disposal concepts for defense wastes in salt media. Both bedded and domal salt are addressed, and a reference concept is recommended for bedded salt. Like the recommendation for crystalline media (Section 2) this one is intended to support modeling and performance assessment, and feasibility studies in preparation for possible future siting of a defense repository.

The review part of this section considers concepts developed in the US and Germany, and how they could work for disposal of defense waste forms. The selection part points to the major features of a geologic repository, and the selection criteria, and selects one general disposal concept for bedded salt, with packaging differences for HLW and DSNF. Thermal management calculations are presented in Section 4, confirming that thermal limits for a defense repository in salt are likely to be met.

3.1 Background

Salt Repository Basics – A defense repository in salt would require several tens of kilometers of tunnels, plus access and ventilation shafts, and a waste handling route. It would be constructed at a depth of approximately 500 to 1,000 m in bedded or domal salt, and it could occupy a plan area of 2 to 5 km^2 depending on the layout. The hydrologic situation would likely be brine saturated, but the salt host rock would have such low porosity and permeability that it is effectively dry. Temperature limits from heat-generating waste will be imposed on the host salt and possibly EBS components such as the waste package, but these limits will be readily met because of the high thermal conductivity of salt media (Section 4).

Underground salt tunnels are readily mined with mechanized equipment, and ground support consists of rock bolts with mesh to control rockfall where worker access is required. (More robust ground support is not effective at resisting salt creep.) For repository applications, backfill consists of "mine-run" crushed salt produced from excavation, which recovers properties and behavior similar to intact salt after reconsolidation. Underground equipment typically runs on rubber tires to eliminate rail maintenance associated with floor heave.

Underground mines in evaporite formations are typically accessed by vertical shafts (e.g., potash mines) which minimize exposure to incompetent and/or water-bearing strata. Freezing the overburden before and during shaft construction was used at Gorleben, and was proposed for repository site characterization at the Deaf Smith site (DOE 1988). In principle, an evaporite section could also be accessed by ramp but at significantly greater cost if special measures such as freezing are needed. The question of final closure and sealing also favors shafts because ramps comprise about 10× the volume (and 10× the exposure to water-bearing rock units). The potential favorable utility of shafts depends also on the availability and safety of hoists with sufficient capacity, which would be less technologically mature as payload capacity exceeds 50 MT (Fairhurst 2012).

The repository safety case would rely on multiple barriers including the geosphere, engineered borehole/shaft/tunnel seals, tunnel backfill, the waste container, and the waste form. The waste package container lifetime requirement would likely be limited (e.g., 10^2 to 10^3 years), as the host salt has extremely low permeability and has geomechanical stable such that no releases from the repository are expected. Slow degradation of the waste form would also not be relied on for isolation performance. The only geologic repository for nuclear waste that is currently operating worldwide is the Waste Isolation Pilot Plant, a repository in bedded salt, for transuranic (TRU) waste. For a defense repository, like at WIPP, total-system long-term performance assessment could be dominated by future inadvertent human intrusion (DOE 2014c).

3.1.1 Geologic settings in salt media

Evaporite sequences typically include layers of halite, other hydrous chloride minerals, anhydrite, and clay. The depth would be selected to optimize the host unit thickness, for construction feasibility, and for isolation of the waste. Some combination of elevated temperature and burial depth is needed to ensure that the repository closes fully due to salt creep within a few decades (e.g., the Waste Isolation Pilot Plant is situated in a thick halite section of the Salado formation, at a depth of approximately 620 m where the in situ temperature is 27°C).

Salt is known to decrepitate at temperatures greater than about 250°C due to the pressure developed in fluid inclusions. Peak temperature for intact salt is typically limited to 200°C to avoid degrading other minerals that have greater sensitivity to temperature than halite, and that may be present in layers within or near the repository (Hardin et al. 2012; Bollingerfehr et al. 2013). Crushed salt is not sensitive to decrepitation (already degraded by communition) which is helpful because the thermal conductivity is greatly reduced which tends to increase the temperature near waste containers.

3.1.2 Review of international and US EBS concepts

Repository Site Near Lyons, Kansas - A conceptual design for a repository for disposal of TRU waste and HLW was completed in 1971 (Mora 1999), to be implemented in a former salt mine where R&D (Project Salt Vault) had been conducted between 1963 and 1967. The disposal concept called for emplacement of vitrified HLW canisters in boreholes drilled vertically in the floor, in galleries constructed for the purpose. The repository was cancelled a few years later because of the presence of oil and gas wells, some unmapped, and because of ongoing solution mining activities.

Waste Isolation Pilot Plant – WIPP was initially conceived as a repository for TRU waste, with the technical possibility of extending the mission to defense HLW. Investigation of the geomechanical behavior of the WIPP salt, and heated tests, were planned in 1982 and performed during the 1980's as the WIPP underground facility was developed. Borehole heater tests were performed to simulate disposal of heat-generating HLW, using vertical and horizontal configurations. These experiments were eventually cancelled in 1987 as the US Congress shifted the disposal path for defense HLW to coincide with the commercial repository being sited and developed under the Nuclear Waste Policy Act of 1982.

US Salt Repository Project – The most comprehensive conceptual design for a mined repository in salt was developed by the US Salt Repository Project in the 1980s (Fluor 1987). The concept was developed for a specific site in the Permian Basin, with extensive bedded salt, at a depth of about 790 m (DOE 1986). The salt in this setting is interbedded with clastic sediments and anhydrite. Access to the underground facility was to be through shafts excavated through the overlying sediments (some water-bearing) using a freezing method in conjunction with a liner of concrete or cast iron.

The repository layout was to have been excavated in salt using a boom-cutter (roadheader). Waste packages would be emplaced in boreholes either vertically in the floor (similar geometry to KBS-3 but with no buffer), or horizontal in pillars between access tunnels. Access tunnels would be large openings, e.g., 6 m wide and 7 m high for vertical emplacement, spaced approximately 36 to 51 m apart. Vertical emplacement boreholes would be just large enough for waste packages (about 1 m in diameter, with no buffer) with depth of approximately 6 to 8 m depending on package length.

Waste packages for the salt repository were developed in two configurations, for borehole emplacement and self-shielding in-tunnel emplacement (Westinghouse 1982). For HLW emplacement in boreholes, the overpacks were to consist of approximately 10 cm of low-carbon steel as a corrosion allowance material with containment lifetime greater than 1,000 yr. A thin (2.5 mm) outer corrosion-resistant layer of Ti alloy was also evaluated. Peak temperatures of less than 100°C were calculated for the waste form, overpack, and salt. The self-shielding packages would have overpacks of gray cast iron or cast steel, with thickness of 30 to 47 mm, each containing a single HLW canister.

German Reference Concept – Two basic alternatives were presented in the most recent German update on disposal concepts for salt (Bollingerfehr et al. 2013): 1) in-tunnel disposal of large waste packages containing mostly SNF, and 2) vertical borehole emplacement of smaller canisters containing reprocessing waste (Filbert et al. 2010a). The waste streams for disposal consist of commercial SNF (intact and rod-consolidated), vitrified reprocessing waste, and incidental wastes such as fuel assembly structural parts resulting from rod consolidation.

The concepts would accommodate SNF in large POLLUX® and CASTOR® casks, or smaller BSK-3 canisters (suitable for vertical boreholes). The POLLUX and CASTOR types are self-shielded whereas the BSK-3 canisters are not. The POLLUX cask was designed specifically for disposal, with capacity for rod-consolidated fuel from ten pressurized water reactor (PWR) assemblies, but the cask can also be fitted for waste from reprocessing. CASTOR casks are currently in use for transportation and storage of intact SNF assemblies, and the CASTOR-V type typically contains 19 PWR assemblies (Graf et al. 2012).

The reference in-tunnel concept would consolidate SNF rods into POLLUX disposal casks, and emplace them horizontally on the floor in long disposal tunnels, backfilled immediately with crushed salt. Existing reprocessing waste (i.e., vitrified glass) would be packaged in 887 additional POLLUX casks (Bollingerfehr et al. 2013). Approximately 2,632 CASTOR casks with intact SNF from commercial power and research reactors would be dispositioned the same way, if a shaft hoist

with sufficient capacity is built. POLLUX casks require 85 MT hoist capacity, and CASTOR-V casks 175 MT (Hardin et al. 2013a).

The alternative borehole concept would use the smaller BSK-3 canisters for all types of waste (Figure 3-1). These canisters would have an outer diameter of 52 cm and length of 5.06 m (Bollingerfehr et al. 2013). They would be emplaced vertically in 60-cm diameter, steel-lined boreholes. The BSK-3 canister is designed to contain SNF rods from three PWR assemblies, or three pour canisters of reprocessing waste. Emplacement boreholes would be drilled vertically downward from access tunnels at the repository level (e.g., starting at 870 m below the surface at Gorleben) to a depth of about 300 m. Approximately 50 canisters would be emplaced in each borehole, so that a total of about 200 boreholes would be needed for all waste types, occupying a plan area of 1 to 2 km^2. We note that this concept is for domal salt, and if applied to bedded salt the vertical borehole length could be limited by the host unit stratigraphy, to a few tens of meters or less.

No decision has yet been made favoring the reference in-tunnel POLLUX concept or the BSK-3 for borehole emplacement. Advantages of the POLLUX concept include self-shielding, possible use for storage before disposal, and larger capacity so that fewer packages are needed (Bryan et al. 2011). Disadvantages include extra hoisting capacity for the waste shaft, and greater heat output which requires decay storage. Advantages of the BSK-3 concept include lower heat output, and similarity to packaging for HLW. Disadvantages include the need for re-packaging after storage, lack of shielding, difficulty of retrieving ~50 canisters from boreholes if required, and the limitation to domal salt or thick sequences of bedded salt. We note that both concepts would require rod consolidation, which is a significant expense and generates additional wastes.

Another concept was also generated for comparison whereby large POLLUX or CASTOR-V casks would be emplaced in horizontal boreholes (Bollingerfehr et al. 2013). The motivation for utilizing borehole emplacement would be more immediate, verifiable consolidation of the host salt around the packages. Whereas experience with remote-handled waste canister emplacement at WIPP has shown dimensional stability of emplacement boreholes to be problematic (Nelson and White 2008) the R&D program at Gorleben has had extensive construction experience. The concept calls for a novel trolley mechanism to facilitate sliding packages into slightly inclined emplacement boreholes.

Generic Salt Repository Study (2011) – A scoping study was performed in 2009-2011 to support planning for a closed, commercial nuclear fuel cycle that would involve reprocessing and disposal of vitrified HLW (Carter et al. 2011). Glass pour canisters with diameter of 61 cm and length of 2.74 m would be directly disposed of using an in-alcove mode of emplacement. The concept is essentially similar to the German reference in-tunnel concept described above, but without shielding or overpack on the HLW canisters, and using an alcove layout instead of long emplacement tunnels. Each access tunnel or room would be 3.3 m wide, 3.0 m high, and 135 m long, accommodating 16 alcoves each containing one HLW canister. Alcoves would have the same opening dimensions, and maximum length of 11 m. A panel would total 236 alcoves, and 80 panels would be filled during 40 years of operation (18,800 canisters). Other aspects of the layout such as service drifts, ventilation, and shafts would be similar to the present design for WIPP.

The heat output of each HLW canister was assumed to be 8.4 kW at emplacement, based on current properties of HLW glass waste produced at the Savannah River Site. The alcove layout was selected to help dissipate this heat, spreading the packages out on a 12-m grid (average maximum thermal load 39 W/m^2). Thermal analysis showed that a 200°C peak temperature limit could be met in the host salt, but that HLW canister surface temperatures would approach 300°C (Clayton and Gable 2009).

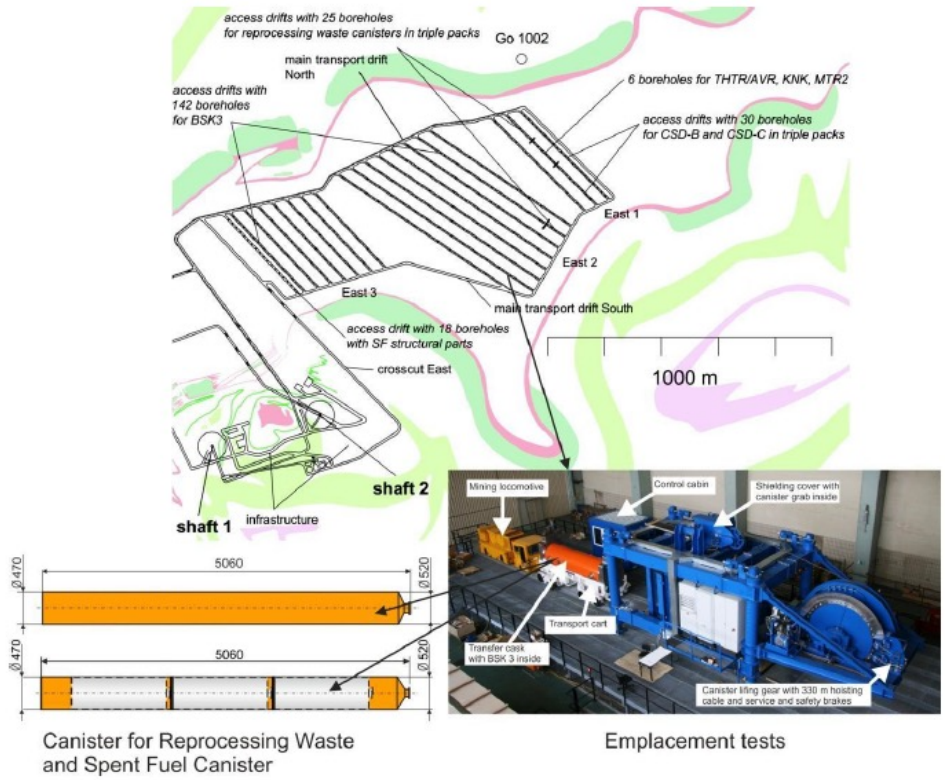

Figure 3-1. Composite of BSK-3 alternative disposal concept, with layout for Gorleben, canister dimensions, and emplacement machine (from Bollingerfehr et al. 2013, Figure 4.10).

Remotely operated and shielded equipment would be developed to move HLW canisters into position at the back of each alcove, situate them transversely on the floor, and then cover them with crushed salt. In addition, low-heat output waste from reprocessing could also be placed in the alcove and covered during backfilling. The access tunnel between alcoves could remain open for some time but would eventually require backfilling (in a few months or years) as the host rock heated and creep deformation increased.

Carter et al. (2011) was the first in the US to propose direct disposal of HLW pour canisters using an in-alcove mode that would not require drilling emplacement boreholes. Crushed salt would be used for shielding. The concept could be used in domal salt if sufficient salt dome volume were available to spread the thermal load in three dimensions; alternatively, the HLW could be aged an additional 30 years or longer at the surface before emplacement. The report authors stated a preference for bedded salt because of the more extensive layout geometry that would be possible. The generic salt repository concept was used in a later evolution that would include larger, heavier waste packages containing SNF (Hardin et al. 2012).

Defense Repository Concept Study (2012) – The generic salt repository concept was further refined for US defense wastes (Carter et al. 2012). The disposal concept would use long linear emplacement tunnels instead of alcoves, which substantially reduces the excavated volume per each canister. The emplacement scheme called for fully excavating an emplacement tunnel, then emplacing waste and backfilling, starting at the far end and retreating until the tunnel is full. Each tunnel would be 3 m high, and 6 m wide to provide sufficient clearance for transverse emplacement of 4.6 m (15-ft) long HLW canisters. Spacing between canisters would be varied from

approximately 1 to 10 m or more depending on their heat output. HLW canisters would be emplaced along 150 m of each tunnel. A panel would comprise 10 parallel emplacement drifts, and up to 20 panels would accommodate all defense wastes that exist or are planned for production.

This Carter et al. study (2012) contributed a more efficient concept of in-tunnel emplacement, and an efficient development scheme whereby crushed salt for backfilling each tunnel would come from excavating the next one. The need for remotely operated and shielded equipment would be similar to the generic concept discussed above. Shielding by crushed salt could be less effective than for the generic concept because of the geometry, especially for small spacing between canisters. In such instances, the ability to only emplace limited quantity of crushed salt backfill limits its shielding efficiency.

In-tunnel emplacement was used in a later study as the solution for large waste packages weighing 80 MT or more (Hardin et al. 2013a). The advantage of axial emplacement is that the transporter can straddle the waste package instead of projecting it ahead (Figure 3-2). This applies to smaller waste packages as well, to limit the transporter size and weight.

3.1.3 Pros and cons of salt media

A summary of advantages and disadvantages associated with repository development in salt media was proffered by SNL (2015), and is presented here with modifications:

Pros

- For waste forms with higher heat output, the high thermal conductivity and high temperature tolerance of salt tend to minimize the duration of thermal decay storage needed, and may allow smaller repository layouts than other media.
- For wastes for which criticality is a concern, the relative lack of water and the high thermal-neutron capture cross-section of natural chlorine makes it easier to address criticality concerns.
- The limited far-field radionuclide transport in salt reduces the relative importance of characteristic lifetimes for waste form degradation and waste package containment, in the context of long-term waste isolation.
- The low permeability and reducing environment makes it easier to keep particular waste packages isolated from each other, should that be necessary.
- Some untreated waste types may be appropriate for direct disposal in salt, potentially reducing costs and risks associated with waste treatment.
- The experience at WIPP provides additional operational confidence.

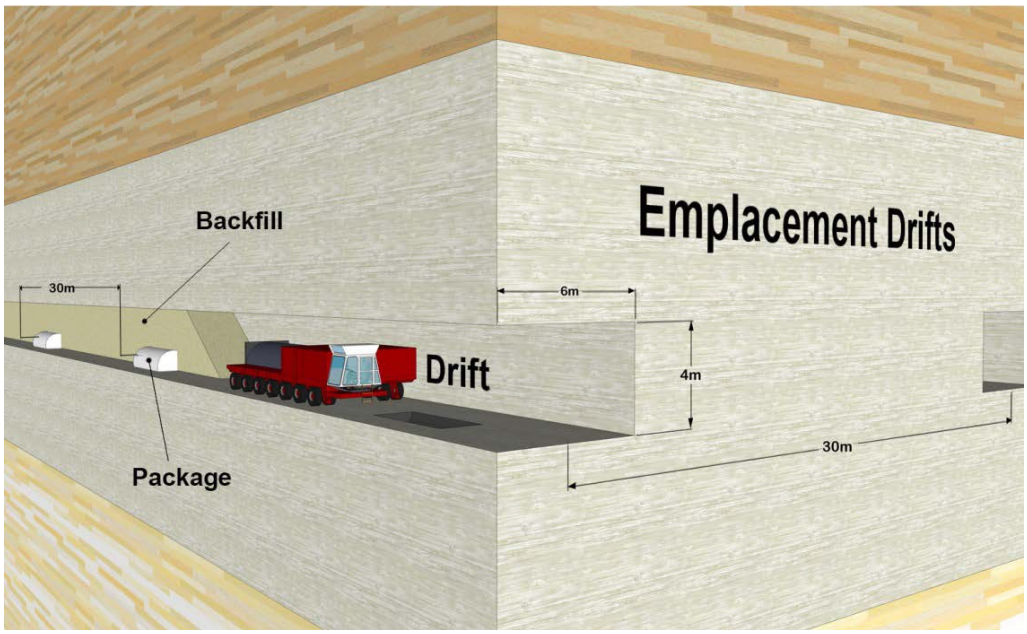

Figure 3-2. Salt repository concept for large, heavy waste packages with in-tunnel axial emplacement (from Hardin et al. 2015).

Cons

- For large waste packages (e.g., Naval SNF) conveyance down shafts could be challenging due to the needed hoist capacity, and ramps could be challenging to build and close in an evaporite sequence (e.g., incompetent clay layers and groundwater inflow).
- Technologies for waste package transfer and emplacement using rubber-tire equipment in salt have not been demonstrated.
- For high thermal loads (e.g., Naval SNF, which is beyond the scope of this report) some evaporite sections may include layers of different salts or clay that have lower peak temperature limits than halite.
- There may be a greater need for site-specific information regarding salt media because of the high reliance on integrity of the host rock for waste isolation.
- Human intrusion is likely to be a dominant release scenario in performance assessment, and the regulatory licensing approach under a dose-limit rule for salt has not been established.

3.2 Disposal Concept Selection for Salt Media

3.2.1 EBS design features available for salt media

Key aspects and assumptions about a defense repository are discussed in Section 1.3 and in Section 2.2.1 with reference to crystalline media. The following caveats are provided for salt:

- Much of the defense waste is vitrified HLW, for which the waste form has been selected already. Vitrified HLW could be disposed of in a salt repository without long-lived packaging, as indicated by plausible concept studies (Section 3.1.2).

- Any form of the Idaho calcine waste could be disposed of in a salt repository without long-lived packaging.
- DSNF comes in various forms, a few of which will require processing or special packaging that is not yet fully specified (Section 1.2.1). DSNF would require less neutron absorbing material for criticality control in a salt repository because of the prevalence of chloride brine. However, requirements for criticality control during storage and transportation to the repository will be essentially the same as for any other disposition pathway.
- External criticality (fissile nuclides released from waste packages) will also be limited for a salt repository, as investigated by Rechard et al. (1999).
- The vitrified HLW and much of the DSNF and derived waste forms, are projected to have low heat output at the time of disposal (less than 300 W per canister).
- The depth of the repository will be nominally 600 to 1,000 m similar to the existing facilities at WIPP and Gorleben.

The principal EBS design features from which a disposal concept can be developed, were identified in another "optioneering" review (EPRI 2010) and are presented here with additions, and in reference to a salt host media:

- Use of an overpack vs. reliance only on a storage cask (Bollingerfehr et al. 2013) or thin-walled canisters (Carter et al. 2011, 2012).
- Borehole emplacement vs. alcove or in-tunnel emplacement (Bollingerfehr et al. 2013; Carter et al. 2011, 2012).
- Cavities in tunnel floor for cooling, as proposed for large waste packages containing commercial SNF (Hardin et al. 2013c).
- Crushed salt used as backfill in tunnels and borings, which reconsolidates to a state of deformability and low permeability that is closely similar to intact salt.
- Other backfill components added to control the post-closure environment (e.g., MgO as added to WIPP disposal rooms).
- Components such as ground support that support waste package emplacement or closure and are left in place.
- Far-field EBS components (e.g., liners left in place, concrete structures, sealing materials, and seals/plugs in shafts and boreholes)

Waste Package Materials and Concepts – For waste packages in salt, published assessments have shown that containment lifetimes can be small, on the order of 10^2 to 10^3 years (or even zero), while still meeting long-term performance objectives (Sevougian et al. 2013, 2014). This range corresponds to the "short-lived" waste packages identified in previous reviews (NDA 2008; EPRI 2000). It reflects that post-closure waste isolation is provided by the geologic setting, and the function of waste packaging is to provide containment during handling, transport, emplacement, and repository closure operations.

Waste package breach during or after emplacement in a salt repository is important because of the potential for worker exposure and contamination of the underground facility. This is especially true if the waste form contains volatiles, which distinguishes SNF from HLW glass that has been de-volatilized during melting. The most significant cause for package breach is probably loading by

creep of the host salt after emplacement and backfilling. One possible loading mechanism is floor heave under waste packages emplaced transversely on the emplacement tunnel floor.

Steel is often proposed for waste packaging in a salt repository because its properties and behavior are well understood, and it is cost effective. Steel corrosion when surrounded by salt will consume water, so the immediate environment will be very dry at nominal conditions. Anoxic corrosion in a salt repository (e.g., WIPP) with abundant steel present in packaging, has been analyzed and concluded to be brine-limited (Bryan et al. 2011). Moreover, the ambient relative humidity of moisture (as brine) in equilibrium with sodium chloride salt is approximately 73 to 75%, which is too low to support anoxic corrosion of iron in steel. Thus, notwithstanding results from laboratory corrosion tests in brine (summarized by Bryan et al. 2011) the interaction of steel with the salt disposal environment is likely to render steel packages long-lived. Other materials have been tested in brines also including titanium, Hastelloy, stainless steels, Corten steels, mild steels, cast iron, and high-purity iron (summarized by Bryan et al. 2011).

Additional details on the DOE-Managed waste groups, disposal pathways, and options for waste configuration and packaging, are given in Appendix B - Packaging Concept for Defense Waste Disposal in Salt Host Media.

Buffer/Backfill Materials – Crushed salt has been studied as the best choice for backfilling a salt repository because it reconsolidates under pressure, attaining properties similar to intact salt (Bechthold et al. 2004). Investigations of salt bricks have also been reported (EPRI 2010) but this backfill would require much more effort (and a source for intact salt) than using crushed salt.

Emplacement Modes – The so-called "enclosed" emplacement modes in salt can meet thermal limits with short duration of decay storage and do not require long-term repository ventilation (Hardin et al. 2012). Salt openings are not stable for longer than a few years anyway, especially when heated, so long-term ventilation would be impractical. A ventilated mode in salt was investigated and the effects were equated to thermal decay storage, while the rate of salt creep increased significantly with a 20°C temperature increase in the pillars around the ventilated opening (Hardin et al. 2012).

As discussed previously, borehole emplacement was proposed for the Salt Repository Project, identified as an option to the German reference concept, and implemented at WIPP for remote-handled waste. Horizontal boreholes at WIPP begin to creep closed immediately after drilling, and dimensional interference has been a significant obstacle to emplacement, hence the project proposed to emplace remote-handled waste in shielded waste boxes (Nelson and White 2008).

Repository Panel Organization – Panel options for a salt repository are similar to other media, except that salt may provide more flexibility. The generic salt repository (alcoves) and the 2012 defense repository concept (in-tunnel) can both handle the range of defense wastes including vitrified HLW canisters and packaged DSNF. Reasons for segregating different waste types include: 1) spacings fine-tuned to control heat dissipation; 2) opening sizes tailored to canister or package sizes (assuming the emplacement machine does not control opening size); and 3) prudent segregation of the more radioactive HLW and DSNF, for risk management and so that monitoring for leakage during the operational period can be focused on certain areas.

Radiation Shielding – For any disposal concept in any host medium, self-shielding waste packages could make underground operations significantly safer, with less reliance on remotely operated equipment. However, shielding greatly increases cost and waste package weight, especially compared to direct disposal of HLW in pour canisters.

To provide shielding for extended worker access, wall thickness of 20 to 30 cm for steel packages is required (Westinghouse 1982; less thickness for lower radiation flux). To achieve the same

shielding with crushed salt, minimum backfill thickness of approximately 1.5 m would be needed. When a waste canister or package is covered with crushed salt, the pile of material will seek an angle of repose, typically 35 to 40° for granular materials. The waste package height and minimum cover thickness will determine how far the reposing material extends on the floor, and the distance to where the next package can be emplaced. Thus, the use of backfill for shielding trades directly against how closely waste packages can be emplaced.

Conveyance and Transfer of Waste Packages Underground – Defense waste packages that contain single canisters of DSNF, or that consist of single canisters of vitrified HLW, can be transported underground using existing shaft hoists. For example, the friction hoist at WIPP has a payload capacity of 40.9 MT which is sufficient for a waste canister completely enclosed by 25 cm of steel, plus a carriage. When built in 1986 this hoist was the largest of its kind in the world; the largest at present has a capacity of 50 MT (Fairhurst 2012).

Similar weight constraints apply to underground conveyance, which must operate on rubber tires in salt openings. Equipment for transferring packages from a shaft station, and emplacing them on the floor of a disposal tunnel, has not been developed. Like shaft hoists, such equipment is simplified if single-canister packages are the rule. Some technology options for waste package conveyance are discussed by Hardin et al. (2012).

Repository Ventilation – Packages of defense HLW or DSNF will produce little heat (except for Naval SNF which is not included in this analysis) and emplacement tunnels will be backfilled concurrently with package emplacement. Thus, ventilation for heat removal is not possible after emplacement. This reduces the numbers of shafts and other openings needed for ventilation (e.g., as discussed by Hardin et al. 2012).

Prefabrication Concepts – Prefabrication would involve assembling each waste package and its buffer into one unit at the surface, and transporting it underground for disposal. Such measures are not needed if the buffer/backfill material is crushed salt that does not require assembly, pre-treatment, or protection during handling and emplacement, to achieve desired properties.

3.2.2 Criteria for salt repository concept selection

As observed in Section 2.2.2, generic disposal concepts should be simple and technically mature, and they should benefit from international progress.

An important uncertainty in salt concept selection is whether a defense repository would be sited in domal or bedded salt. By their nature, salt domes are smaller in areal extent and parts can be off-limits if there was previous mining or drilling. By comparison, salt basins such as the Permian have also been extensively drilled. Analysis provided in this report indicates that a defense repository would be small enough (a few km^2) to fit into a salt dome footprint.

A previous study compared the use of domal and bedded salt for a nuclear waste repository and concluded that both are equally viable (Hansen et al. 2016). Accordingly, the concept(s) selected here are viable for both domal and bedded salt.

The particular characteristics of defense wastes that should be taken into account in disposal concept development include the use of lightweight canisters, most with low heat output, that are loaded and sealed at upstream facilities. This means that packaging considerations must be addressed upstream, and that a defense repository would be "clean." The small size and low heat output of much of the defense waste allow flexibility in the use of overpack and repository layout options.

The characteristics of salt media settings that could be important for repository siting and development include (see EPRI 2010, Appendix B):

- Very low hydraulic conductivity and groundwater flux
- Host rock thermal conductivity on the order of 5 W/m-K is better than all alternatives, but interlayers (clay, anhydrite) will increase thermal resistance
- Creep and eventual collapse of underground openings
- Geochemically reducing conditions (with iron-bearing packaging)
- Ground water (if present as a bulk phase) is brine
- Human intrusion potential may be greater than for crystalline or igneous media (guidelines in 40CFR191, Appendix B)

Some of these would not necessarily control EBS design, however, they do mean that a defense repository in salt can be compact, and that underground openings should be backfilled at emplacement. The very low permeability and groundwater flux mean that more reliance will be placed on the geologic setting than engineered barriers such as the waste package.

Cost should be approached cautiously as a criterion for concept selection (Section 2.2.2). However, cost could be important because salt concepts have been shown to have significantly lower costs than for other media (Hardin et al. 2012; SRNL 2015; Hardin and Kalinina 2016). For a defense repository in salt, the concept should be kept simple like previous examples, so as not to greatly increase the cost.

A major reason why disposal cost is lower in salt media is that less expensive waste packaging is needed. HLW canisters could be directly disposed, or disposed with the inclusion of overpack, if necessary, made from relatively inexpensive low-alloy steel. Unit cost is less with small waste packages, but there is a cost penalty for a large number of packages (unless no additional packaging is used, as for direct disposal of pre-canistered HLW). Selection criteria for waste packaging concepts for salt include those identified previously (Section 2.2.2): structural robustness, reasonable fabrication, containment during operations, technical feasibility, and flexibility to adapt to waste forms and site-specific constraints.

Finally, the most important post-closure release scenario is likely to be inadvertent human intrusion (by analogy to the WIPP safety case). In principle, the defense repository concept could reduce calculated future doses by reducing the frequency of human intrusion. For example, interception of vertically emplaced packages by a future borehole would be roughly 7 times less likely than for horizontal packages (following logic similar to Hardin et al. 2013c). However, there are two problems with future human intrusion as the basis for design criteria. The first is that human intrusion scenarios tend to be stylistic, i.e., based on conditional logic or assumptions, and they are subject to change during the repository licensing process. The second is that the human intrusion scenario may not require direct interception of a waste package by a borehole. For example, part of the WIPP assessment allows that a borehole may connect the repository with pressurized brine from a stratigraphic layer below the repository, and that waste may be mobilized by that brine from the repository into other boreholes that have communication to the surface. For these reasons human intrusion should be left out of the conceptual design discussion, and addressed later in the design process using a stylized approach.

3.3 Recommended Disposal Concepts for a Defense Repository in Salt Media

The repository would have two types of panels, for HLW and DSNF. Each panel would consist of an array of long, parallel near-horizontal tunnels. The panels for different waste types would be

identical in basic layout (tunnel length and spacing) and concept of operations, but would be separated to manage particular characteristics of the waste forms such as the radiation hazard, heat output, and the potential to release radionuclides if breached.

Tunnel opening dimensions (Table 3-1) are selected to limit height, which limits stratigraphic exposure, provides flexibility in accommodating site-specific geology, and limits the amount of backfill placement needed. Tunnel width provides minimal clearance for transverse handling and emplacement of waste packages up to 5 m long.

Tunnel length would be kept reasonably short and waste loading would be managed to aid possible retrieval in the future by modularizing variations in waste type, packaging or emplacement. Emplacement tunnel length was specified at 500 ft by Carter et al. (2012), but 500-m long tunnels would be more efficient (Table 3-1). The same layout could be used for bedded and domal salt, with the salt dome geometry controlling tunnel length and panel orientation (e.g., see Bollingerfehr et al. 2013).

Ventilation requirements for this concept would be minimal because only two emplacement drifts would be open at a time in each panel: the drift being filled with waste and backfill, and the next drift being excavated (and providing the backfill). Ventilation could be provided by at least one intake shaft and one exhaust shaft, plus one shaft for waste handling and one for personnel and materials. During emplacement operations the backfill would not reach to the crown, leaving an open space for ventilation. Any contamination from emplaced packages would be drawn away from the working front, toward the exhaust shaft.

Some repository tunnel layouts show “blind” emplacement tunnels accessed from only one end, to prevent radionuclide migration along excavation-damage pathways past the opposite end. This is not necessary in a salt repository because of the self-healing properties of salt, and not desirable so that ventilation can be directed away from workers during emplacement operations.

The BSK-3 variant concept discussed above would be most useful in a space-constrained domal salt setting, where the salt depth permits vertical arrangement of many packages. Imposing this concept a priori for bedded salt could complicate siting if a minimum thickness of suitable host rock is required.

The remotely operated rubber-tire transport/emplacement vehicle would be front-loading in order to achieve package spacing less than one package length. For canister diameter of 61 cm and length of 4.6 m, an enveloping (clam-shell) cylindrical shield consisting of 15 cm of steel, would give a total weight of more than 34 MT. With front-loading this weight would hang from the front of the vehicle. The vehicle would likely be articulated to negotiate turns where the emplacement tunnels intersect service tunnels. One vehicle would likely be used for both underground transport and emplacement, to minimize transfer operations underground.

The loaded vehicle weight with shielding would be about the same for delivering HLW canisters or DSNF packages, if the required shielding thickness is the same. If the arrangement proves too heavy or large, then axial emplacement could be used with a somewhat lighter vehicle that straddles the packages (Figure 3-2). Axial emplacement would increase the minimum spacing for emplacement access to approximately 6 m, or a little more than the package length.

The addition of shielding requirements would increase package spacing to the maximum values shown in Table 3-1, and thermal requirements for the hottest waste forms could possibly increase them further (but only for relatively few packages). Representing shielding by density-thickness product, a minimum of 1.27 m of crushed salt (2.1 Mg/m^3 density, 36% porosity) would provide shielding equivalent to 15 cm of lead. Using a 35° angle of repose for crushed salt, the center-center spacing between packages controls the thickness of cover by crushed salt. The maximum spacing

values given in Table 3-1 would provide this minimum cover thickness for the waste types indicated.

The principal benefit from placing packages in cavities in the floor would be improved dissipation of heat by improving contact with intact rock, which generally would not be an important concern for a defense waste repository in salt. Such cavities could be used with axial emplacement to reduce package spacing while maintaining shielding, but the improvements would be relatively small (on the order of 10% or less reduction in spacing).

Table 3-1. Dimensions for the defense repository emplacement concept in salt media.

Feature Dimension	DSNF	HLW
Emplacement drift dimensions	3 m high × 6 m wide	3 m high × 6 m wide
Emplacement drift length	~500 m	~500 m
Approximate # of canisters/waste packages per drift [A]	54	57 to 147
Emplacement drift center-center spacing [B]	20 m	20 m
Approximate total # of packages [C]	3,716	25,000
Panel emplacement area by waste type	0.7 km^2	1.7 to 4.4 km^2
Emplacement mode	In-tunnel transverse	In-tunnel transverse
Package spacing center-center	8.2 m [D]	~3 to 7.7 m [D]
Waste package diameter	80 cm [E]	61 cm [F]
Waste package length	~4.8 m [G]	~4.6 m [G]
Waste package (overpack) material	Steel	No overpack
Approximate total loaded package weight	15 MT	5.5 MT
Minimum transport weight with total shielding equivalent to 15 cm of lead	> 34 MT	> 32 MT
Backfill material	Crushed salt (porosity ~36%, a few w/w percent moisture)	
Analogous international concept	Horizontal in-tunnel disposal of POLLUX casks containing consolidated SNF (Filbert et al. 2010a)	

[A] Allow 3 to 10 m between packages, and 30 m at each end of every emplacement drift for crushed salt backfill.
[B] Assume 33% extraction ratio; could be relaxed to provide 30-m wide pillars (Carter et al. 2012).
[C] Estimates of 20,000 to 30,000 HLW canisters, and the value shown for DOE-owned SNF, from Section 1.1.
[D] The larger spacing (up to 8.5 m) allows packages with height of up to 80 cm to be covered with crushed salt at a 35° angle of repose, to provide minimum shielding equivalent to 0.15 m of lead. Smaller spacings could be adequate for less gamma-emitting HLW canisters (e.g., Sr-bearing capsules).
[E] Assuming a 61 cm DSNF canister with overpack.
[F] Direct disposal of HLW canisters without overpack.
[G] Nominal based on 15-ft. canisters (DSNF has a heavy steel overpack); specifics may vary.

3.4 Summary

In summary, the recommended disposal concept for defense waste in salt media is a simple, cost-effective solution. It is well supported by current engineering practice in salt excavation, and waste packaging would be simple and effective, maximizing the contributions of the host rock to waste isolation. The use of waste package overpack on storage canisters would be important only for waste types that are subject to canister breach and release of contamination.

The recommended disposal concept can likely be demonstrated to achieve safety, engineering feasibility, thermal management, and post-closure criticality control objectives:

Safety – Waste packages would be smaller, lighter, and no more radioactive than other concepts for which safety analysis has been done (e.g., DOE 2008; Filbert et al. 2010b). Conveyance of waste packages underground could be done using shaft hoists such as the existing friction hoist at WIPP, for which there is abundant operational experience. Measures would be taken in system design and operation to prevent accidents, such as those described by the German program (Filbert et al. 2010b).

Engineering Feasibility – The most significant technology development needed would be the remotely operated transport/emplacement vehicle (which would likely be moved in sections and assembled underground). Shielding by crushed salt would be included in the concept of operations to make manual operation possible. Other aspects of the recommended concept are within the range of engineering practices used at underground facilities, and particularly those in salt.

Thermal Management – Preliminary thermal analyses presented in this report (Section 4) show that thermal goals (peak temperature <200ºC for intact salt) can be managed for all the waste forms evaluated, with reasonable duration of decay storage, where needed for certain waste types. This performance is due to the superior heat dissipation properties of salt, and the generally low heat output of defense waste forms considered. Further engineering development can be readily undertaken to manage any hotter waste forms that arise.

Post-closure Criticality Control – Canistered DSNF is the only defense waste form containing enough fissile material for criticality to be a plausible concern (except Naval SNF which was not addressed by this report). Generally, the individual DSNF canisters will be under-moderated and criticality cannot occur unless they are flooded. The same flooding criticality analysis will be applied to DSNF for transportation, regardless of what medium is selected for disposal. If the neutron absorbers used to control criticality are sufficiently long-lived in the disposal environment, then credit can be taken for post-closure criticality control. In salt, flooding is possible only with chloride brine which adds additional criticality control margin because of the thermal neutron absorbing properties of natural chlorine. Engineering analysis will be used to determine how much neutron absorbing material is needed for post-closure criticality control throughout the regulatory performance period, considering specific conditions under which flooding of a salt repository could occur, corrosion of the neutron absorbing material, and the effects from chlorine.

4 THERMAL ANALYSIS FOR A DEFENSE REPOSITORY INSELECT HOST MEDIA

The section presents preliminary thermal analysis for the disposal of DOE-managed high-level waste and spent nuclear fuel. The analysis uses both semi-analytical mathematical model for thermal-only simulation and numerical thermal-hydrology simulation using the massively parallel numerical code PFLOTRAN (Hammond et al., 2014). The purpose of the thermal analysis is to provide upper bound estimates for the peak temperatures at drift wall and the waste package surface, as well as provide a basis for selecting and designing key repository elements. Drift

spacing, waste package spacing, waste packaging configuration (i.e. single pack vs. multi-pack), and buffer dimensions and material properties (e.g. thermal conductivity) are all elements of the repository design concept that can be optimized on the basis of thermal analysis. These variables are tuned to ensure that the peak temperatures are not exceeded, and, in effect, set the layout of the repository design.

The thermal analysis looked at both DHLW and DSNF waste forms. The DHLW includes SRS glass, HS glass, HS Cs-Sr glass, and Idaho calcine. Thermal data for each waste form was obtained from Wilson (2016). Thermal power per canister as function of projected total DHLW and DSNF number of canisters are shown in Figure 4-1. The same data are plotted in Figure 4-2 in the form of thermal power per canister as a function of percentage number of canisters. Figure 4-2 illustrates that the majority of the DHLW (>70%) canisters have thermal power less than 50 W. A sizable number of DSNF canisters (nearly 50%) are also in this category.

Decay heat curves for DHLW and DSNF waste types with highest range of thermal power are shown in Figure 4-3. For DSNF, only waste packages with thermal power less than 1 kW were considered. Decay heat curves of DHLW and DSNF waste types with lowest range of thermal power are shown in Figure 4-4.

In this study, the focus is to investigate the magnitude of thermal extremes. Thus, for both semi-analytical and numerical simulation decay heat curves from the highest thermal range were used (i.e. the decay curves shown in Figure 4-3). Because the Wilson dated the cans by production date, which differ by waste type, assigning an all-encompassing time zero is not tenable. Again, the emphasis herein is on performing thermal analysis that captures the theoretical maximum, as a preliminary study and first-order approximation.

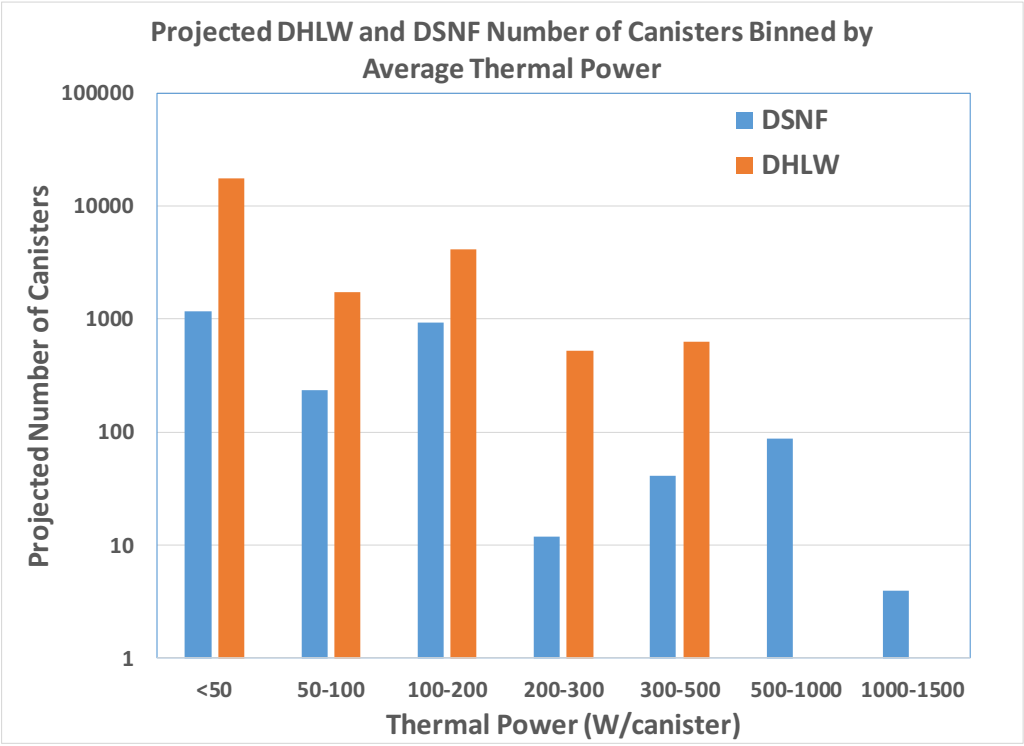

Figure 4-1. Projected total DHLW and DSNF number of canisters binned by average thermal power.

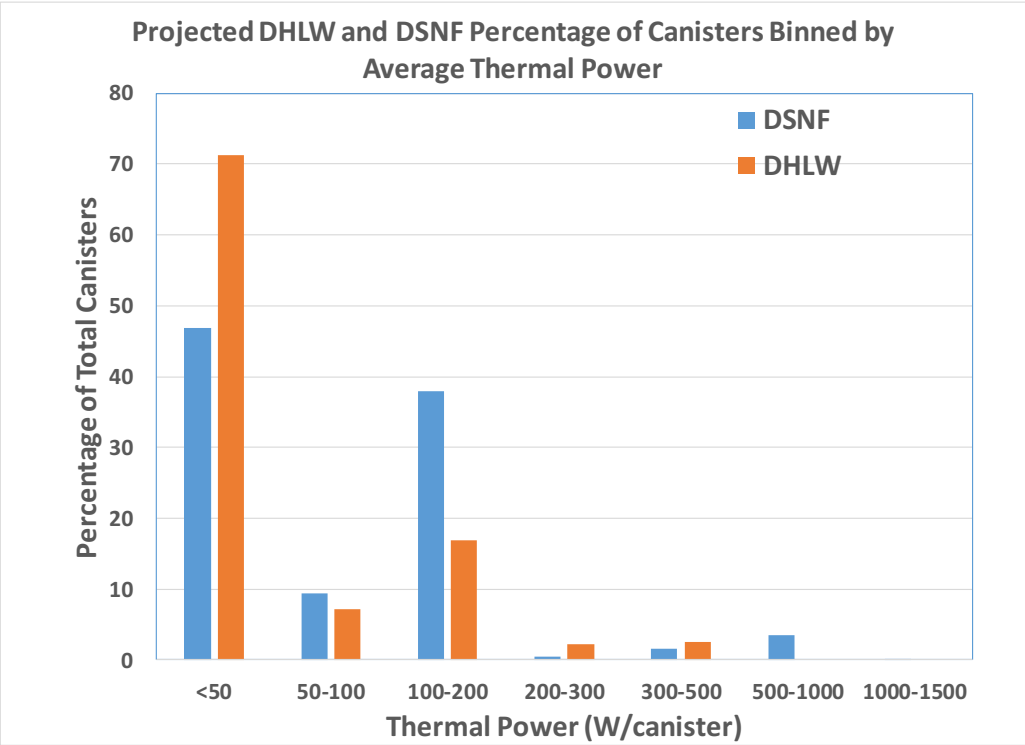

Figure 4-2. Projected total DHLW and DSNF percentage of canisters binned by average thermal power.

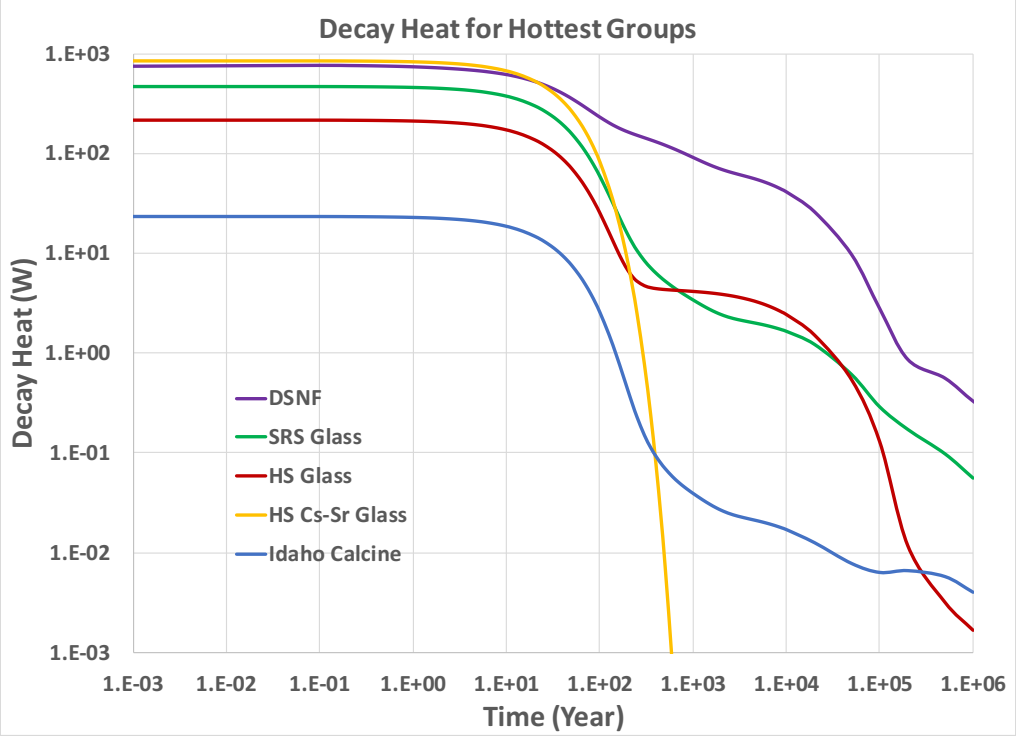

Figure 4-3. Decay heat curves for bins of DHLW and DSNF waste types with highest range of thermal power. (Note: For the DSNF, only bins with thermal power less than 1 kW were considered.)

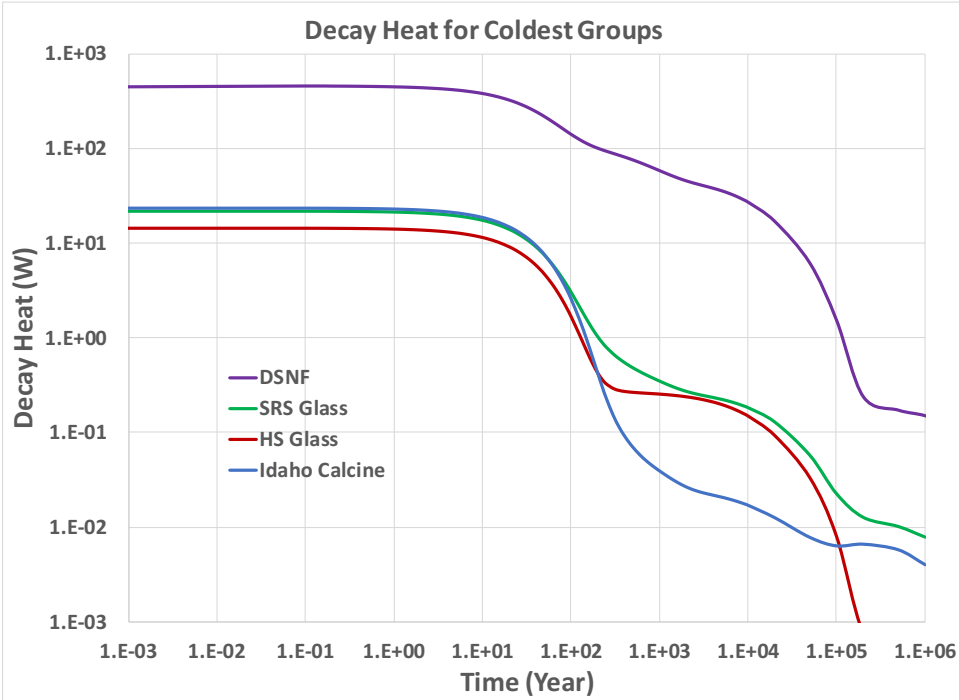

Figure 4-4. Decay heat curves of bins of DHLW and DSNF waste types with lowest range of thermal power.

4.1 Thermal analysis for a defense repository in crystalline and salt media using the semi-analytical method

Thermal-only, semi-analytical analysis was conducted for the disposal of DOE-managed waste types in crystalline and salt host rocks. The semi-analytical method is based on the approach developed for enclosed emplacement modes by Hardin et al. (2011, 2012). The method was used to calculate the temperature histories for combinations of disposal concept and waste type, assuming a particular emplacement layout for each concept. Thermal responses for DOE-managed waste forms were investigated for disposal concepts in two generic host media (crystalline rock and bedded salt). The output of interest to this work is temperature history at the surface of the waste package and at the drift wall.

The general approach for closed systems is based on heat transfer by conduction only, neglecting convection and thermal radiation. These simplifications are reasonable for low permeability media and enclosed emplacement modes (Hardin et al., 2012).

4.1.1 Geometry, material properties and other input

The disposal setting and dimensions are specific to each disposal concept and waste type. For the crystalline rock concept waste packages are emplaced individually horizontally, encapsulated in swelling clay-based buffer material. The semi-analytical thermal analysis was carried out for single pack (existing canister or waste package) and multi pack (5 glass canisters in a waste package) disposal options. The canister size for each waste type for single pack disposal is given in Table 4-1 (Carter et al., 2012, Table 3-7). For DSNF, the canister diameter is 0.61m; in this study the total DSNF waste package diameter will equal 0.80 m, as there is additional diameter owing to the use of an overpack. For crystalline rock, the overpack will be a corrosion-resistant material, while the salt design will utilize a steel overpack.

Table 4-1. Sizes of single pack canisters for disposal in crystalline and salt repositories

Waste Package Type	Diameter m (in)	Length m (in)
DSNF canister	0.80 (31.5)	4.57 (180)
SRC Glass canister	0.61 (24)	3.05 (120)
Idaho Calcine canister	0.61 (24)	3.05 (120)
HS Glass canister	0.61 (24)	4.57 (180)
HS Cs-Sr canister	0.66 (26)	1.52 (60)

A schematic diagram of a single DHLW standardized canister is shown in Figure 4-5. For the multi-pack disposal option, the waste packages are represented by the 5-DHLW/DOE Long waste packages used on the Yucca Mountain Project with nominal diameter of 2.13 m (83.7 in) and length of 5.31 m (209 in) (DOE 2008). A schematic diagram of the waste packages is given in Figure 4-6.

Ambient average ground surface temperature of 15°C, and a natural geothermal gradient of 25°C/km, were assumed to calculate temperature at the near field. Crystalline rock thermal conductivity of 2.5 W/m-K was used. Clay-based buffer material is used for thermal analysis in crystalline medium. For the semi-analytical simulations, the buffer material is assumed to be initially dry and to remain so during the peak temperature period. For compacted, dry clay-based buffer material a thermal conductivity of 0.6 W/m-K was assumed (Hardin et al., 2012). Studies show that effective thermal conductivity of buffer material can be increased by using additives to bentonite (Wang, et al. 2015). In this study a higher thermal conductivity of 1.43 W/m-K is used for sensitivity analysis.

For a generic salt repository concept, it is assumed that crushed salt backfill will be deployed. For the semi-analytical analysis, a value for crushed salt thermal conductivity of 0.57 W/m-K was used (Hardin et al., 2012). Since the salt host will creep as time passes, it is expected that the crushed salt will eventually consolidate to a compacted state with material properties similar to those of intact salt. In this study, a backfill thermal conductivity of 3.2 W/m-K (a value associated with intact salt) is used for sensitivity analysis. The parameter values are summarized below.

Input for thermal analysis of repository in crystalline rock with single pack canisters
Drift diameter – 1.5 m
Drift spacing – 20 m (base case), 10 m
Waste package spacing – 10 m (base case), 5 m
Buffer thermal conductivity: 0.6 (base case), 1.43 W/m-K
Surface storage time – 10, 50, 100 years

Input for thermal analysis of repository in crystalline rock with multi pack waste packages
Drift diameter – 4.5 m
Drift spacing – 20 m (base case), 10 m
Waste package spacing – 10.31 m (base case), 20 m, 7 m
Buffer thermal conductivity: 0.6 (base case), 1.43 W/m-K
Surface storage time – 10, 50, 100 years

Input for thermal analysis of repository in salt with single pack canisters
Drift diameter – 3.05 m
Drift spacing – 20 m (base case), 10 m
Waste package spacing – 10 m (base case), 5 m
Buffer thermal conductivity: 0.57 (base case), 3.2 W/m-K
Surface storage time – 10, 50, 100 years

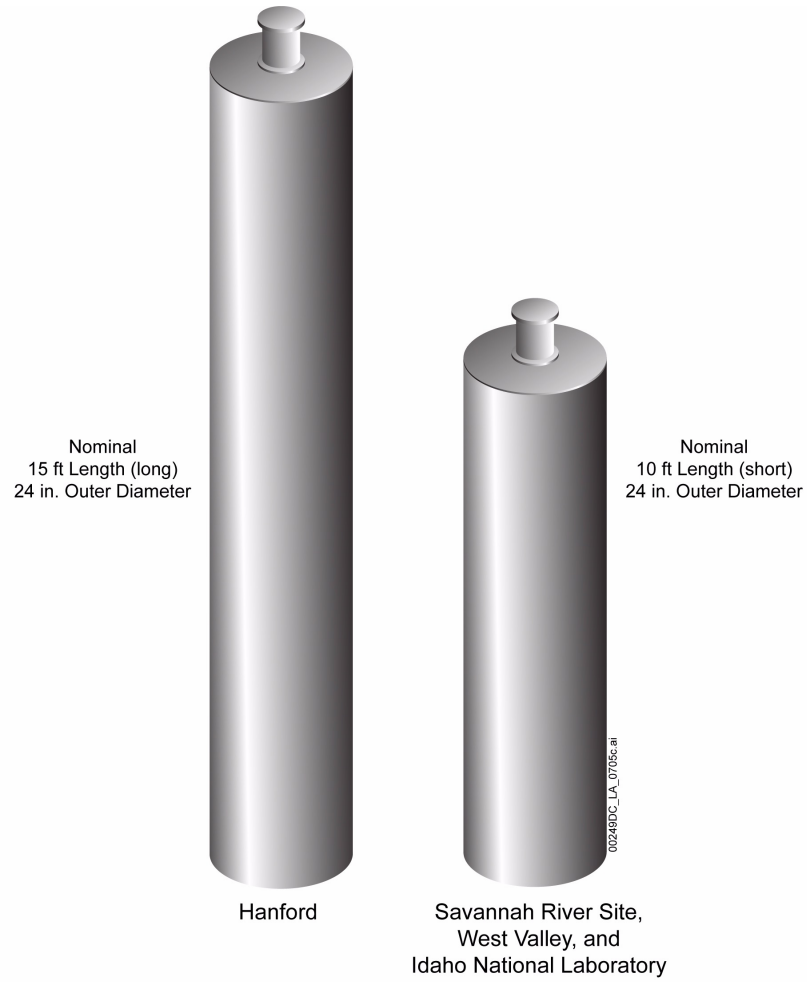

Yucca Mountain repository SAR (Figure 1.5.1-8)

Figure 4-5. DHLW standardized Canisters (DOE, 2008).

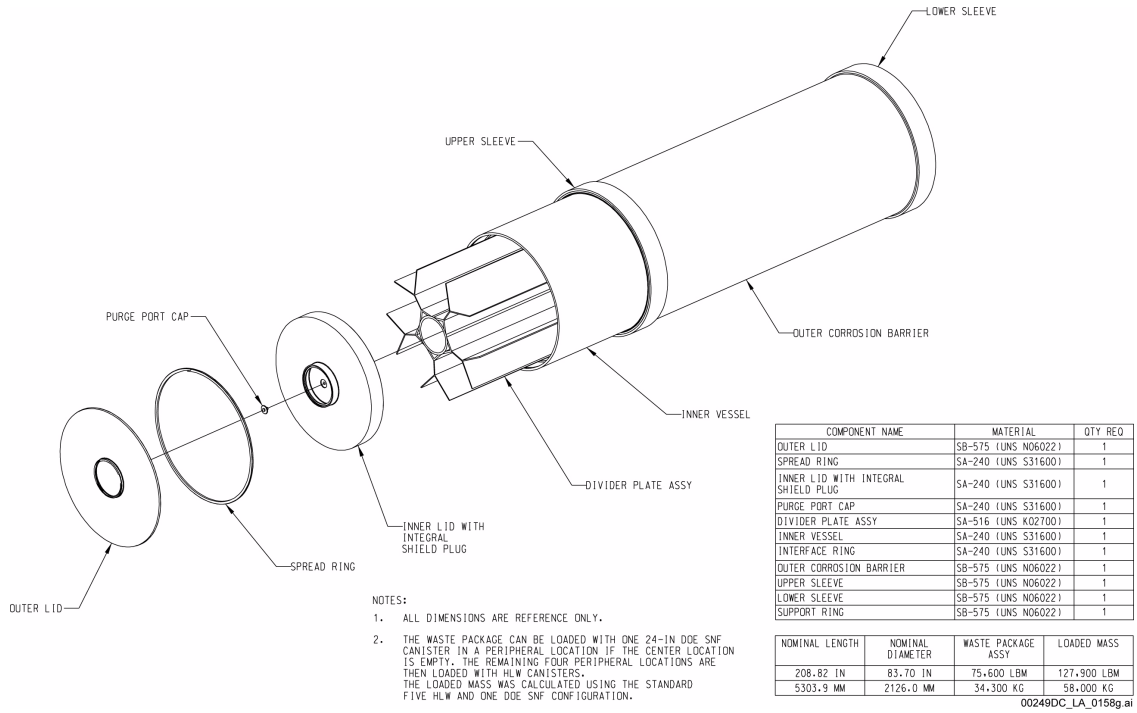

COMPONENT NAME	MATERIAL	QTY REQ
OUTER LID	SB-575 (UNS N06022)	1
SPREAD RING	SA-240 (UNS S31600)	1
INNER LID WITH INTEGRAL SHIELD PLUG	SA-240 (UNS S31600)	1
PURGE PORT CAP	SA-240 (UNS S31600)	1
DIVIDER PLATE ASSY	SA-516 (UNS K02700)	1
INNER VESSEL	SA-240 (UNS S31600)	1
INTERFACE RING	SA-240 (UNS S31600)	1
OUTER CORROSION BARRIER	SB-575 (UNS N06022)	1
UPPER SLEEVE	SB-575 (UNS N06022)	1
LOWER SLEEVE	SB-575 (UNS N06022)	1
SUPPORT RING	SB-575 (UNS N06022)	1

NOMINAL LENGTH	NOMINAL DIAMETER	WASTE PACKAGE ASSY	LOADED MASS
208.82 IN	83.70 IN	75,600 LBM	127,900 LBM
5303.9 MM	2126.0 MM	34,300 KG	58,000 KG

Yucca Mountain repository SAR (Figure 1.5.2-5)

Figure 4-6. 5-DHLW/DOE Long Co-disposal waste packages (DOE, 2008).

4.1.2 Results of semi-analytical thermal analysis

Semi-analytical simulations were carried out for the two host media using the input data described above, and surface storage times of 10, 50 and 100 years. Table 4-2 to Table 4-4 provide a summary of predicted maximum waste package surface and drift wall temperatures for different input data for each waste type.

Table 4-2 shows results for crystalline medium and single pack canisters with 10-year surface storage. The predicted results indicate that with the exception of the HS Cs-Sr glass canisters and DSNF waste packages, maximum temperatures are below 100 **°C.** These results represent the bins with highest range of thermal power (Figure 4-3), and thus provide an upper bound estimate for maximum drift wall and maximum waste package surface temperatures.

With the upper bound defined, it is clear that waste packages with lower thermal output will reach lower maximum temperatures at the drift wall and on waste package surfaces. Using a higher value for buffer thermal conductivity results in considerable reduction in maximum temperatures for all waste types. Increasing drift spacing and waste package spacing also produce lower maximum temperatures. Thus, by manipulating these aspects the engineered barrier system can be designed so as to produce a repository layout whose drift and waste package surface temperatures fall below the designated thermal limits.

Table 4-3 shows results for crystalline medium and multi-pack canisters with 10-year surface storage. The maximum temperatures are higher than the single pack case due to the increased heat content. However, the increased surface area of the multi-pack waste package (Figure 4-6) increases heat transfer, reducing waste package temperature. The multi-pack thermal analysis did not include the DSNF and HS Cs-Sr glass canisters to reduce thermal power, as multi-pack emplacement is not recommended for these waste type.

Table 4-4 shows results for bedded salt medium and single pack canisters with 10-year surface storage. Multi-pack disposal was not considered for salt medium as the logistics of handling and emplacing heavy waste packages can present operational challenges (see Section 3.1 and Fairhurst 2012). The maximum waste package surface and drift wall temperatures for disposal in salt are lower than those of the crystalline host rock. This is due to the higher thermal conductivity of the intact salt compared to crystalline rock.

Figure 4-7 through Figure 4-12 show temperature histories of waste package surface for disposal in the two host media. Figure 4-7 to Figure 4-10 are results for disposal in crystalline host rock. Figure 4-7 shows temperature history for single pack modeling case for all waste types for surface storage time of 10 years. The solid lines represent the base case thermal conductivity and the dashed lines are for the higher buffer thermal conductivity value. The plots show that for all waste types (temperatures drop to manageable levels after about 100 years. The dashed lines indicate that increasing buffer thermal conductivity lowers temperatures for all waste types. Figure 4-8 is for surface storage of 50 years, which produces significant thermal decay. This is reflected in the temperature history, with lower temperatures compared to the 10-year storage case.

Figure 4-9 and Figure 4-10 are thermal history plots for the multi-pack disposal case, for the two surface storage times. As with the single pack case, use of higher buffer thermal conductivity and/or surface storage for longer periods reduce waste package surface temperatures.

Figure 4-11 and Figure 4-12 are results for disposal in bedded salt host rock. The two figures show temperature histories for the single pack disposal case, for 10-year and 50-year surface storage times. The figures show similar trends as for the single pack disposal in crystalline rock. As with the thermal histories for the crystalline medium, use of higher buffer thermal conductivity and/or surface storage for longer periods reduce waste package surface temperatures.

It is worth noting that the thermal decay curves contained in Wilson's report use the date of production as time zero for the decay curve; the production date itself being an average of all production dates of all the canisters contained within the thermal bin. The decay curve is derived by taking the average radionuclide inventory on a per canister basis (sum radionuclides of all canisters within the bin and divide by the number of canisters in the bin). It is worth noting that this methodology potentially overestimates the thermal output, as some amount radiologic decay goes unaccounted.

Additionally, it is important to keep in mind that the results presented above are for a relative small percentage of waste packages that fall into the highest range of thermal output. Most of the DSNF and DHLW waste packages are less than 200W (~90%), with about 70% DHLW below 50 W and nearly 50% of DSNF also below 50 W (see Figure 4-2).

More detailed information, i.e. waste inventory by canister, will be needed to produce more precise thermal analysis. It is also critical that the entire inventory be decayed to a common future date, such that a realistic time-referenced thermal analysis can be performed.

Table 4-2. Generic repository in crystalline rock – Single Pack canisters – Temperature at waste package surface and drift wall for different parameter values and surface storage time of 10 years

Drift Spacing (m)	WP Spacing (m)	Buffer Kth (W/m K)	Tmax WP (°C)	Tmax DW (°C)
SRS Glass (468 W at Time = 0)				
20	10	0.6	67.0	41.3
20	5	0.6	71.6	48.7
20	10	1.43	51.3	41.3
10	5	0.6	81.7	61.2
10	10	0.6	70.3	47.5
HS Glass (218 W at Time = 0)				
20	10	0.6	40.8	33.3
20	5	0.6	43.3	36.7
20	10	1.43	36.1	33.3
10	5	0.6	48.5	42.5
10	10	0.6	42.8	36.1
Calcine Glass (23.8 W at Time = 0)				
20	10	0.6	29.5	28.2
20	5	0.6	29.7	28.6
20	10	1.43	28.7	28.1
10	5	0.6	30.2	29.2
10	10	0.6	29.6	28.5
DSNF (634 W at Time = 0)				
20	10	0.6	67.9	51.1
20	5	0.6	80.7	66.6
20	10	1.43	57.5	51.1
10	5	0.6	103.9	89.3
10	10	0.6	78.5	62.7
Cs-Sr Glass (849 W at Time = 0)				
20	10	0.6	144.9	55.3
20	5	0.6	150.6	67.7
20	10	1.43	90.9	55.3
10	5	0.6	162.8	89.8
10	10	0.6	147.5	65.9

Table 4-3. Generic repository in crystalline rock – Multi-pack waste package – Temperature at waste package surface and drift wall for different parameter values and surface storage time of 10 years

Drift Spacing (m)	WP Spacing (m)	Buffer Kth (W/m K)	Tmax WP (°C)	Tmax DW (°C)
SRS Glass (2340 W at Time = 0)				
20	10.31	0.6	122.9	73.7
20	10.31	1.43	91.5	73.7
20	20	0.6	113.8	55.7
20	7	0.6	136.7	91.2
10	10.3	0.6	149.5	103.4
HS Glass (1090 W at Time = 0)				
20	10.31	0.6	72	49.2
20	10.31	1.43	57	48.7
20	20	0.6	67.5	40.5
20	7	0.6	77.9	56.8
10	10.31	0.6	84.7	63.4
Calcine Glass (119 W at Time = 0)				
20	10.31	0.6	32.3	29.8
20	10.31	1.43	30.7	29.8
20	20	0.6	31.8	28.9
20	7	0.6	33	30.7
10	10.31	0.6	33.7	31.4

Table 4-4. Generic repository in salt – Single Pack canisters – Temperature at waste package surface and drift wall for different parameter values and surface storage time of 10 years

Drift Spacing (m)	WP Spacing (m)	Buffer Kth (W/m-K)	Tmax WP (°C)	Tmax DW (°C)
SRS Glass (468 W at Time = 0)				
20	10	0.57	54.9	35.6
20	5	0.57	59.2	42.4
20	10	3.2	38.2	35.6
10	5	0.57	69	52.6
10	10	0.57	58.7	40.8
HS Glass (218 W at Time = 0)				
20	10	0.57	36.7	31.2
20	5	0.57	39.1	34.3
20	10	3.2	32	31.2
10	5	0.57	43.9	39
10	10	0.57	38.8	33.6
Calcine Glass (23.8 W at Time = 0)				
20	10	0.57	28.9	27.9
20	5	0.57	29.1	28.2
20	10	3.2	28	27.9
10	5	0.57	29.6	28.7
10	10	0.57	29.1	28.2
DSNF (634 W at Time = 0)				
20	10	0.57	62.1	43.6
20	5	0.57	73.4	57.4
20	10	3.2	46.2	43.6
10	5	0.57	92.7	75.1
10	10	0.57	71.3	52.5
Cs-Sr Glass (849 W at Time = 0)				
20	10	0.57	116	41.8
20	5	0.57	120.8	53.7
20	10	3.2	51.6	41.8
10	5	0.57	133.8	71.7
10	10	0.57	119.4	50.9

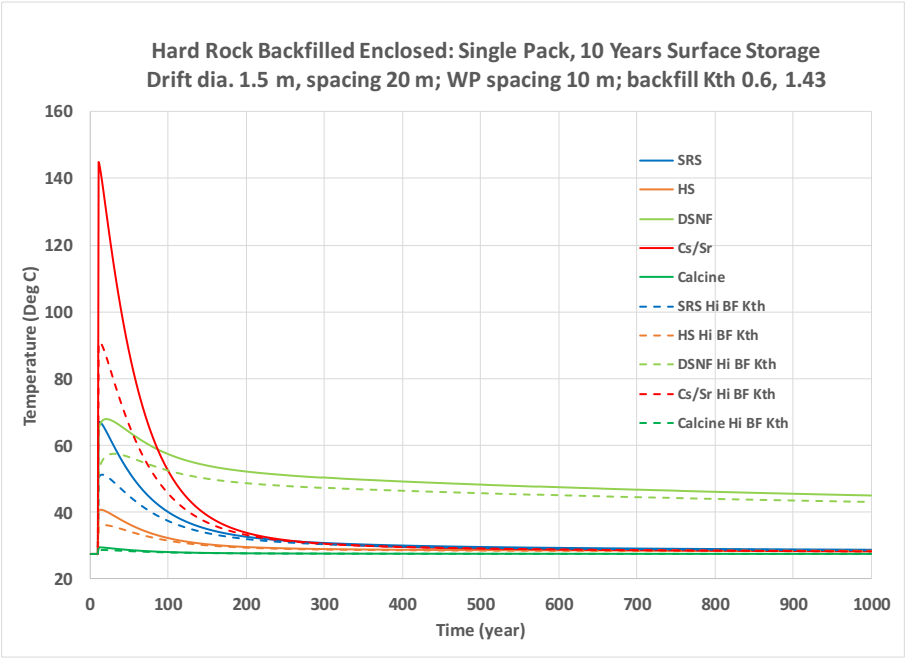

Figure 4-7. Temperature histories at waste package surface after surface storage of 10 years for single pack waste packages containing DHLW and DSNF waste types, for a repository in crystalline medium. The dashed lines represent the case where the high buffer thermal conductivity value of 1.43 W/m-K is used.

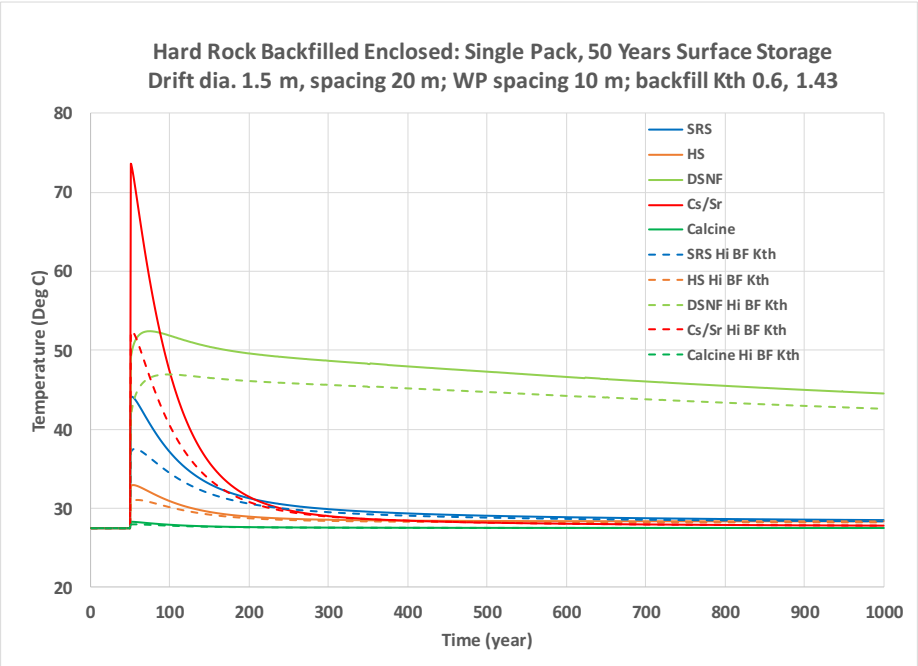

Figure 4-8. Temperature histories at waste package surface after surface storage of 50 years for single pack waste packages containing DHLW and DSNF waste types, for a repository in crystalline medium. The dashed lines represent the case where the high buffer thermal conductivity value of 1.43 W/m-K is used.

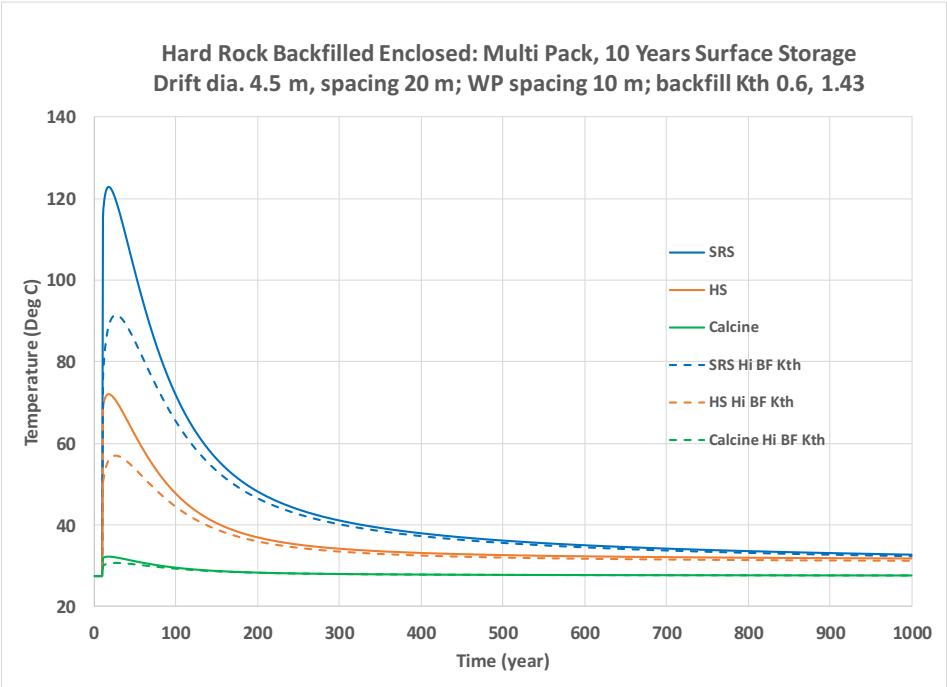

Figure 4-9. Temperature histories at waste package surface after surface storage of 10 years for multi-pack waste packages containing DHLW waste types, for a repository in crystalline medium. The dashed lines represent the case where the high buffer thermal conductivity value of 1.43 W/m-K is used.

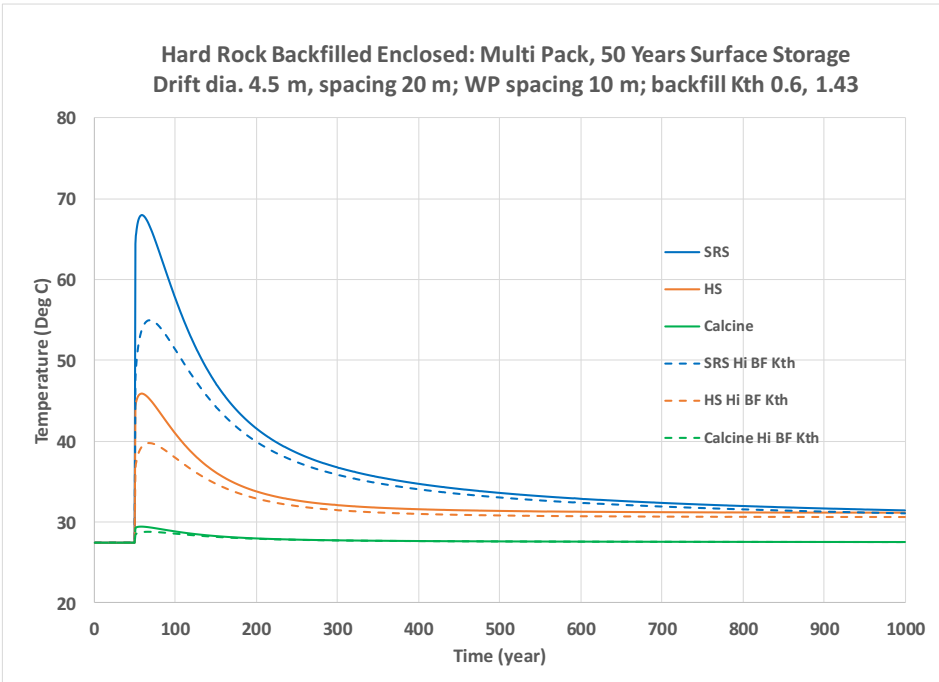

Figure 4-10. Temperature histories at waste package surface after surface storage of 50 years for multi-pack waste packages containing DHLW waste types, for a repository in crystalline medium. The dashed lines represent the case where the high buffer thermal conductivity value of 1.43 W/m-K is used.

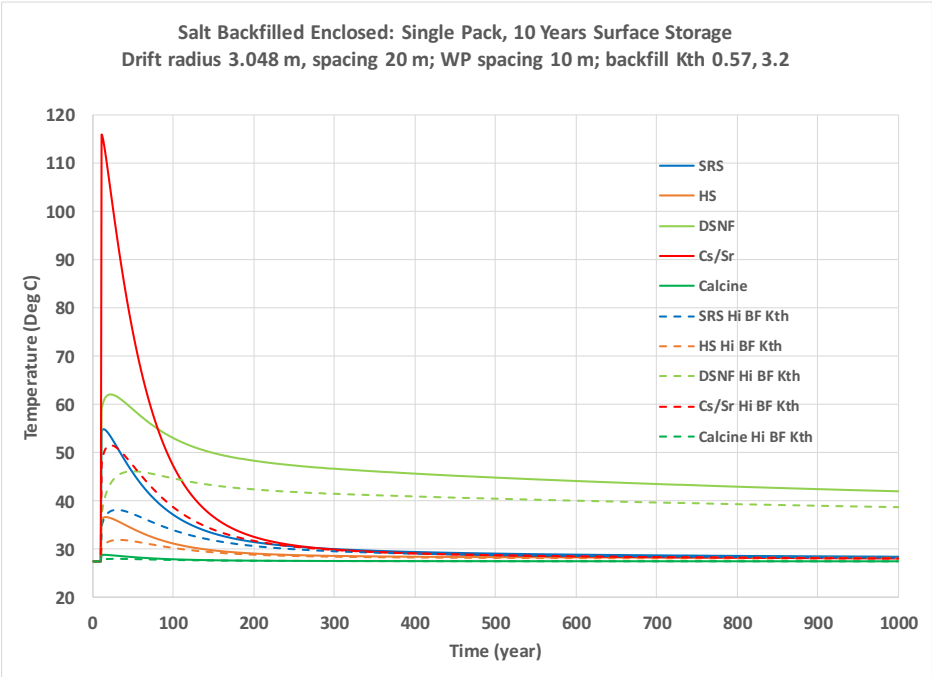

Figure 4-11. Temperature histories at waste package surface after surface storage of 10 years for multi-pack waste packages containing DHLW waste types, for a repository in salt medium. The dashed lines represent the case where the high buffer thermal conductivity value of 3.2 W/m-K is used.

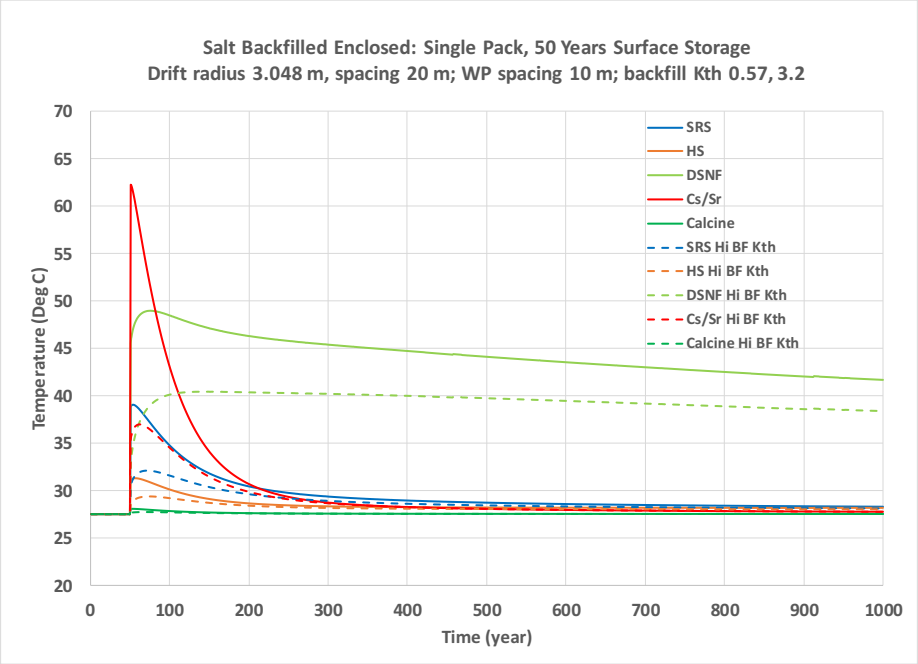

Figure 4-12. Temperature histories at waste package surface after surface storage of 50 years for multi-pack waste packages containing DHLW waste types, for a repository in salt medium. The dashed lines represent the case where the high buffer thermal conductivity value of 3.2 W/m-K is used.

4.2 Thermal-Hydrology analysis for a defense repository in crystalline rock

This study also includes numerical modeling of thermal-hydrology for the disposal of DOE managed DHLW and DSNF waste in crystalline medium. The purpose of the analysis is to estimate thermal distribution in the near field as a result of disposal of various types of waste. The result would be used to support design of repository layout and understand the effect on the host rock and integrity of engineered barrier system components. The analysis simulates fluid and heat transport in the near field of the repository for emplacement of the multi-pack disposal option. Note that for DSNF and Cs-Sr glass waste types single pack emplacement was assumed, occupying the same waste package volume as the multi-pack waste package. Use of actual canister size for these waste types would have required a separate meshing. Additionally, use of the larger canister size for these waste types will tend to under predict waste package surface temperature.

4.2.1 Model Setup

The study looked at thermal conditions in a domain extending over a portion of the repository as shown in Figure 4-13. Selection of the smaller part of the domain allows detailed thermal analysis with a refined mesh. Symmetry conditions on three faces of the domain allow reduced computation burden. The geometry of the domain is 180 m x 1116 m x 1000 m, extending into the host rock in the y-direction and to the surface in the vertical direction. The mesh shown in Figure 4-14, includes unstructured grid with extensive refinement near drifts and waste packages. The mesh size is 910,585 grid blocks. The selected domain covers 9 drifts with 9 waste packages in each drift. The drift diameter is 4.5 m with 2m DRZ surrounding the drifts. Each waste package is surrounded by buffer material. The domain includes a 10.5 m wide access drift. Representations of these details are shown in Figure 4-15 and Figure 4-16.

Base case material properties are as shown in Table 4-5 and the rest of the input parameters are given below. The waste package size is as shown in Figure 4-6. Center-to-center waste package spacing was assumed to be 10.31 m. This gives an end-to-end spacing of 5 m. In addition to the base case materials properties were varied to study the impact on thermal distribution.

Initial conditions include hydrostatic pressure conditions and a geothermal gradient of 25°C /km for a repository at 500 m depth from the surface. The boundary condition includes ambient conditions at the top of the domain representing the surface (10°C and 1 atm.), and a constant temperature of 35°C and no flux conditions at the bottom of the domain. The boundary conditions also include no fluid or heat fluxes on the sides. For the simulations the PFLOTRAN numerical software (Hammond et al., 2014) was used. Use of PFLOTRAN allowed for high performance parallel computing utilizing many processors.

Drift diameter – 4.5 m
Drift spacing – 20 m
Waste package spacing – 10.31 m
Surface storage time – 0, 10, 30 years
Granite permeability –1 x 10^{-18}, 1 x 10^{-16}, 1 x 10^{-14} m^2
DRZ permeability –1 x 10^{-18}, 1 x 10^{-18}, 1 x 10^{-18} m^2
Buffer permeability –1 x 10^{-19}, 1 x 10^{-16} m^2
Buffer dry/wet thermal conductivity – 0.6/0.85, 2.0/2.0 W/m-K

Table 4-5. Base case material properties

Material	Permeability (m^2)	Porosity (-)	Thermal K (W/m-K)	Heat Capacity (J/kg-K)
Granite	1×10^{-18}	0.01	2.5	800.
DRZ	1×10^{-16}	0.01	2.5	800.
Buffer	1×10^{-19}	0.2	0.6/0.85	800.
Waste Package	1×10^{-20}	0.47	46.0	493.

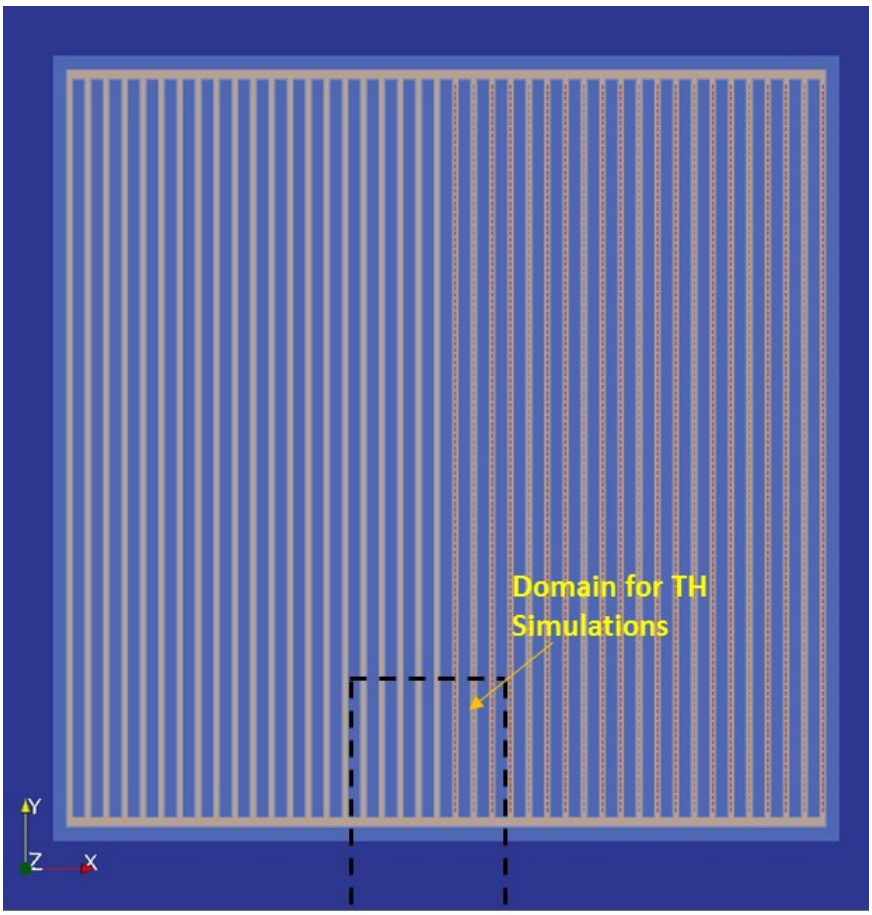

Figure 4-13. Surface layout for DOE managed waste disposal in crystalline medium (Stein et al., 2016). The dotted lines represent cross-section of domain used for thermal-hydrology simulations in this study.

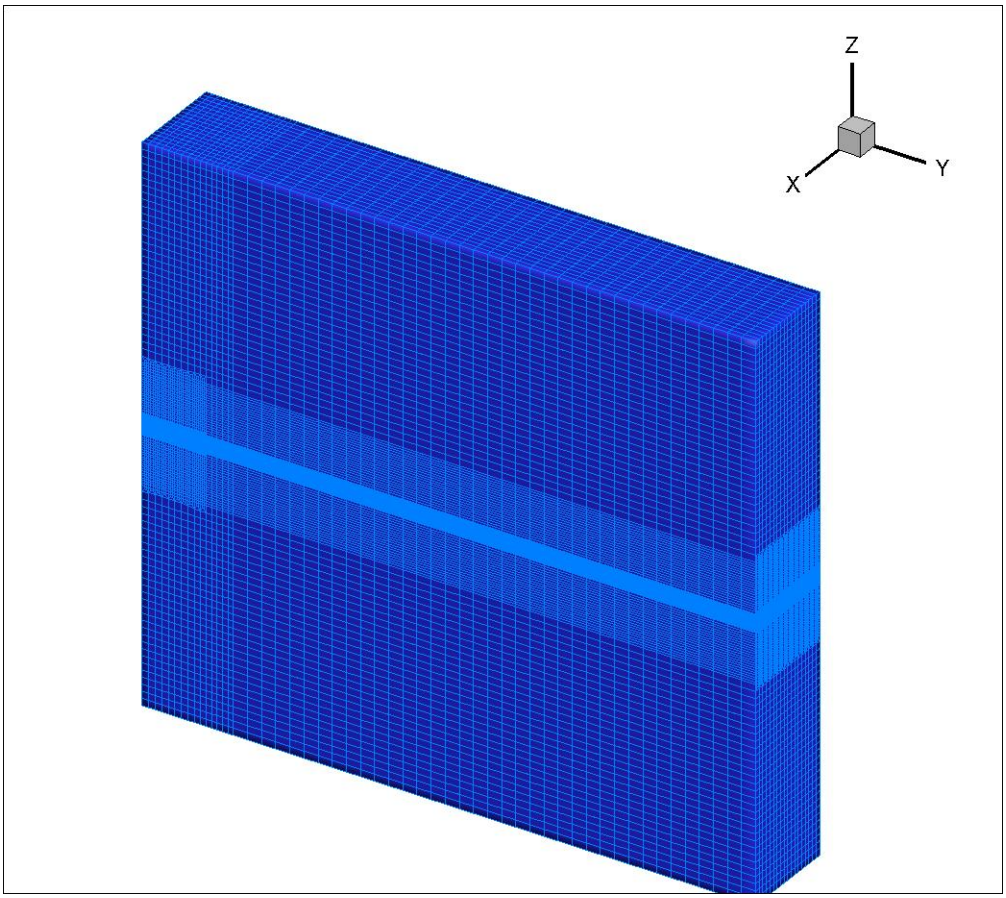

Figure 4-14. Mesh used in thermal-hydrology simulations.

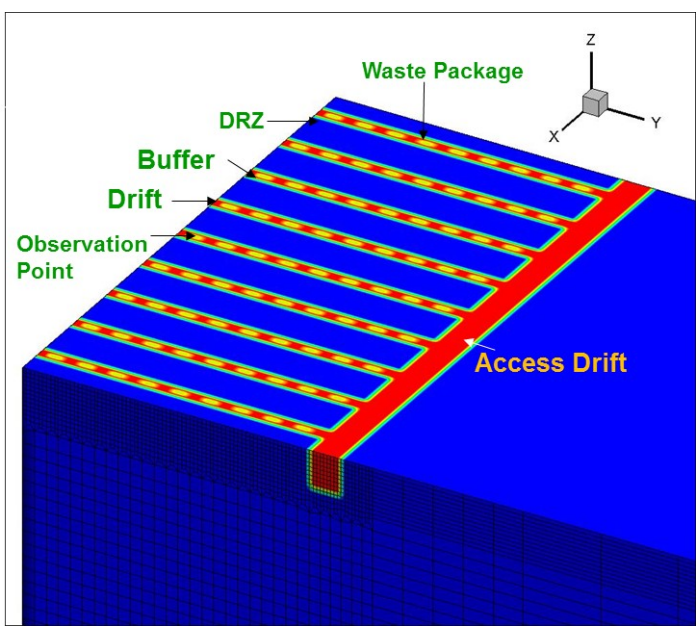

Figure 4-15. Plan view of cross-section at repository level showing 9 drifts with 9 waste package each. The figure also shows access drift, host rock, bentonite buffer and DRZ.

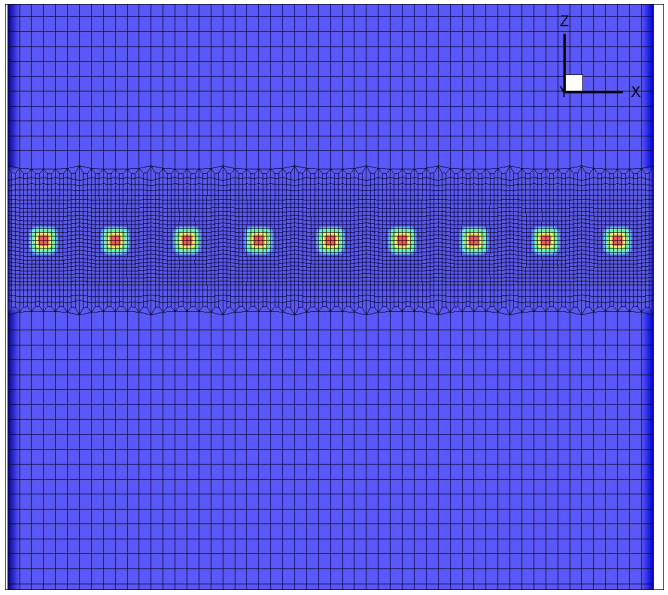

Figure 4-16. Side view of repository level showing 9 drifts with waste packages, buffer, DRZ and host rock.

4.2.2 Results and Discussion

The analysis first looked at disposal of the various types of waste in the multi-pack waste packages using the base case material properties given in Table 4-5. Results of the simulation for disposal of SRS glass are shown in Figure 4-17. The figure shows temperature distribution after 20 years of simulation time. The results show temperature increases around the disposal zone. Away from the disposal zone temperature values reflect mainly the geothermal gradient. The thermal front expands at later times but the magnitude of the temperature rise decreases. Figure 4-18 shows results for calcine glass disposal after 20 years of simulation time. In this case the temperature rise is not as significant as that of the SRS, owing to the lower decay heat of the calcine waste. These trends are similar to those of the semi-analytical method.

Figure 4-19 shows temperature histories for the various waste types at an observation point (shown in Figure 4-15) using base case material properties and no surface storage. The results for the various waste types show temperature rises and declines as a function of the individual heat decay. These trends, too, are similar to what was observed in the semi-analytical method. The SRS glass in the multi-pack containers has the highest maximum temperature rise as a result of the heat content of 5 SRS glass canisters per multi-pack waste package. The maximum temperature rises for DSNF and HS Cs-Sr glass reflect the single pack heat content and the fact that all waste packages are represented by the multi-pack container dimensions. It can be inferred that the heat from the HS Cs-Sr glass canisters was more efficiently dissipated due to an artificially large waste package surface area.

The numerical modeling also included a sensitivity analysis using variations of the material properties. The various material properties considered are described in Section 4.2.1. The results of the sensitivity analysis are shown in Figure 4-20 for disposal of SRS glass. The figure shows temperature histories for the various material property changes. It is clear that temperature rise at the observation point is mainly sensitive to buffer thermal conductivity. As with the semi-analytical

method use of higher buffer thermal conductivity reduces peak temperatures. Note that though the temperature does not seem to be sensitive to permeability of the various materials, the permeability variations do affect pressure and fluid flow.

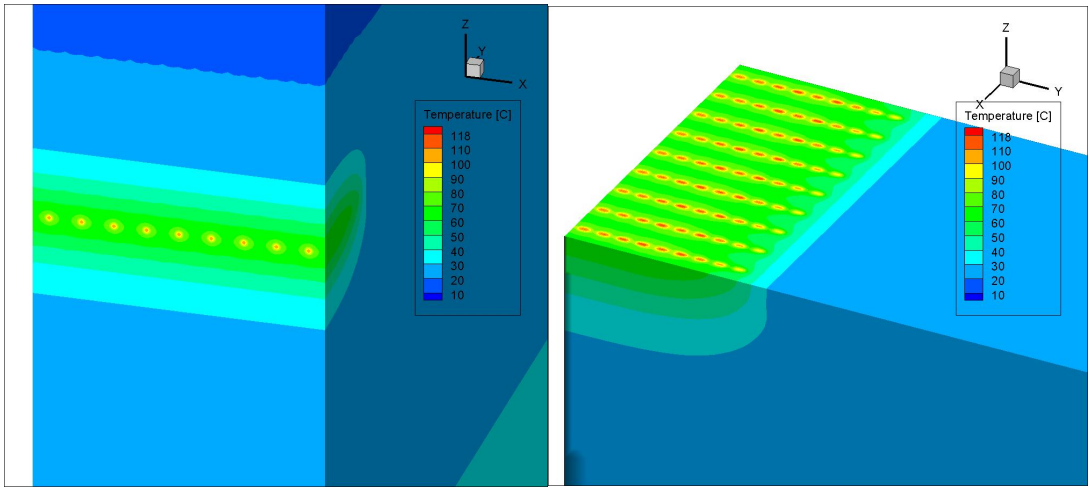

a) b)

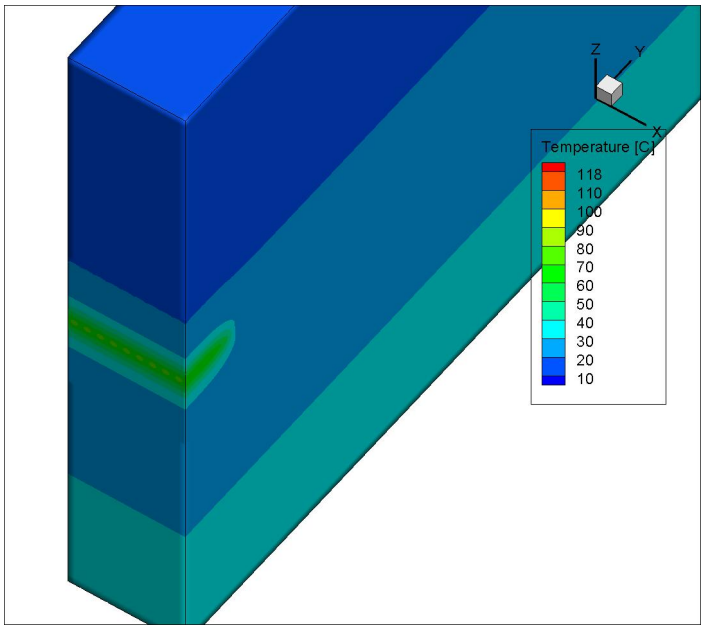

c)

Figure 4-17. Temperature distribution for multi-pack waste packages containing 5 SRS glass at simulation time = 20 years. Disposal with no surface storage.

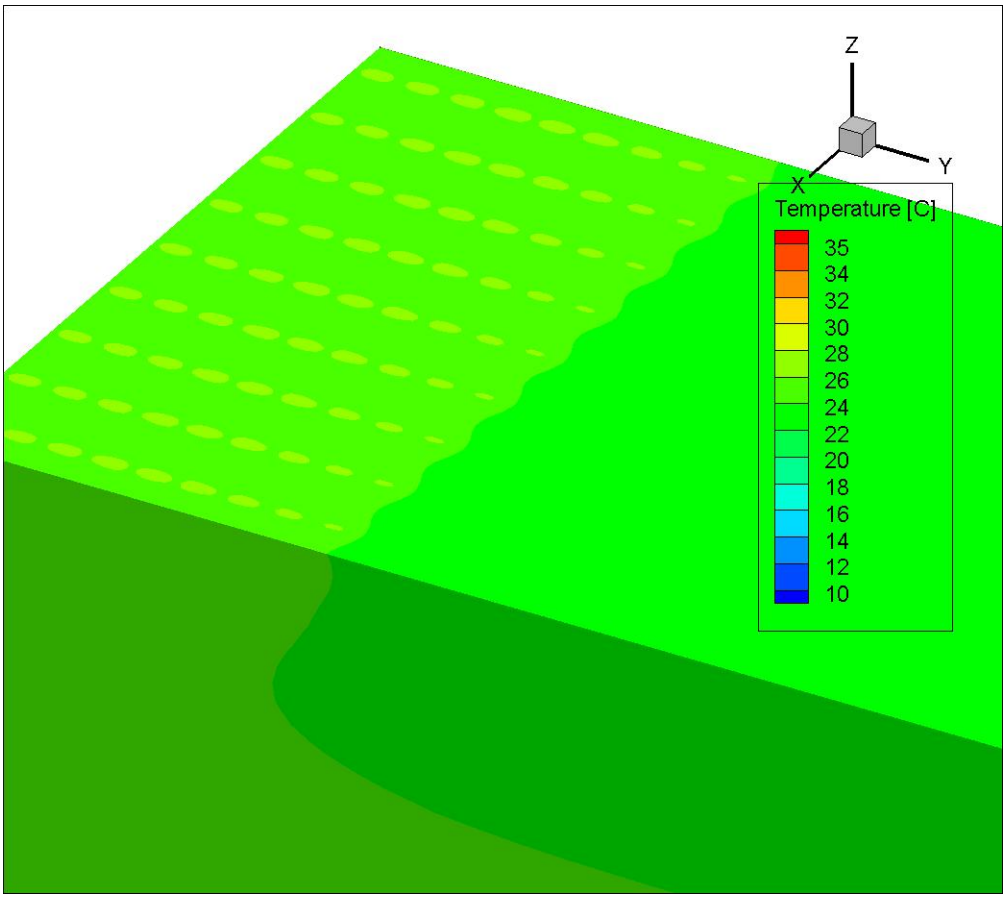

Figure 4-18. Temperature distribution for multi-pack waste packages containing 5 calcine canisters at 20 years simulation time. Disposal with no surface storage.

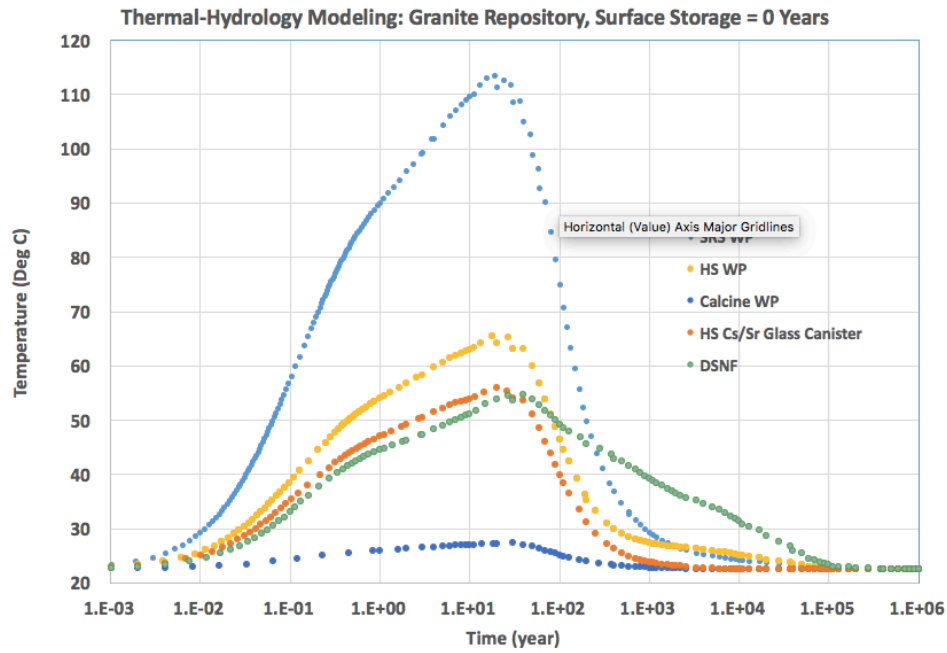

Figure 4-19. Temperature history at an observation point (see Figure 4-15) for multi-pack waste packages containing 5 SRS glass canisters, 5 HS Glass canisters, 5 calcine canisters, and single pack HS Cs-Sr glass canisters and DSNF waste packages. Disposal with no surface storage.

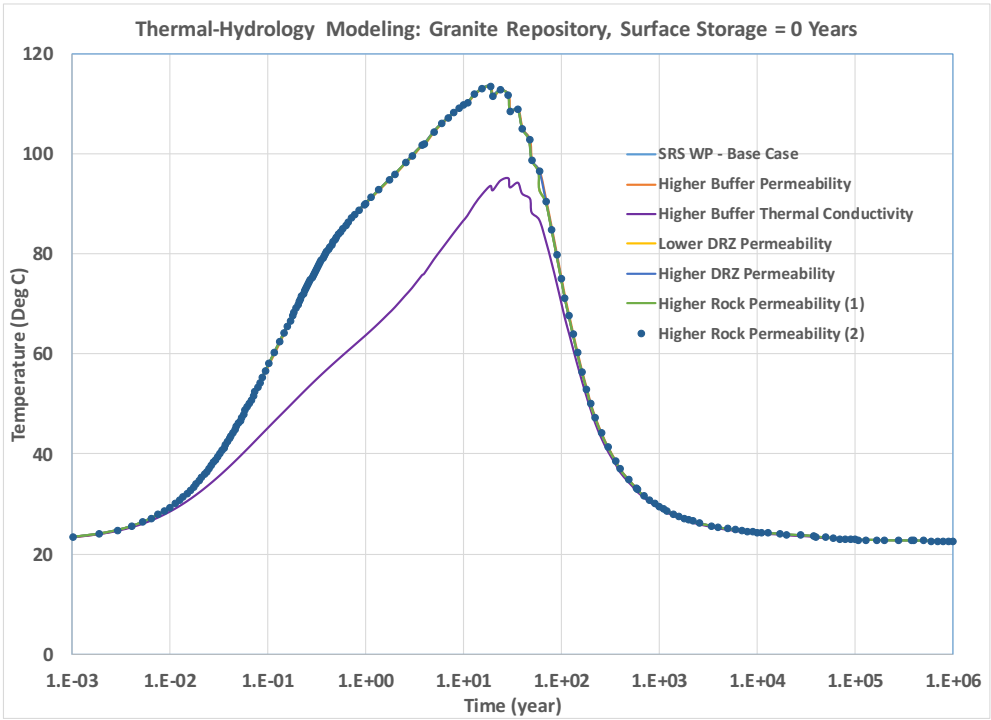

Figure 4-20. Temperature history at an observation point for multi-pack waste packages containing 5 SRS glass canisters. Effect of material properties. Disposal with no surface storage.

This study provided preliminary thermal analysis for the disposal of the various DHLW and DSNF waste types. Further work will be needed to provide realistic representation of the disposal concepts. Recommendations for future work include

- Use of representative emplacement panels for the various waste types.
- Use of two-phase flow in the near field, representing boiling when temperatures rise above saturation conditions.
- Use of a representative fracture model for crystalline medium.
- Modeling of other repository media.

4.3 Summary

Thermal analysis was performed using two methods: 1) a semi-analytical, thermal-only simulation for crystalline and salt host media, and 2) a thermal-hydrologic (TH) numerical model using PFLOTRAN for the crystalline host media. For a subset of the crystalline cases, these two modelling approaches were compared to investigate the effect, if any, of the hydrologic phenomenon on the thermal calculations. The study reveals that the results of both models agree reasonably well, and therefore the semi-analytical model satisfactorily captures the thermal evolution of waste package surface and drift wall temperatures.

Sensitivity analyses were also conducted that investigated the effects of buffer thermal conductivity for both host media. For the crystalline host media, it was shown that unsaturated clay buffer material (of low thermal conductivity) resulted in satisfactory peak temperatures (<100 ºC) for all cases considered (high and low buffer thermal conductivity and10/ 50/100 year surface storage), for all waste types, with a notable exceptions being the Cs/Sr waste and SRS HLW glass for 10 years surface storage and low thermal conductivity buffer. These two case were shown to produce satisfactory peak temperatures by either utilizing a longer surface storage time, or a higher buffer thermal conductivity. For the salt host media, all waste types and all cases resulted in peak temperatures below design specifications (< 200 ºC). Lastly, the TH numerical model showed that when host rock permeability, buffer permeability, DRZ permeability, and buffer thermal conductivity were varied, only buffer thermal conductivity showed significant effect on peak temperature.

Overall, these results suggest that, on the basis of conservative, bounding-case thermal analysis, thermal management of DOE-managed wastes considered (SRS and Hanford HLW glass, DSNF, Calcine waste, and Cs-Sr glass) is achievable, even for the highest thermal output canisters/waste packages for each waste type. For cases where peak temperatures exceed design specifications, thermal management solutions – de-rating for multi-packs (fewer canister), longer surface storage, or use of high thermal conductivity buffer – offer options for effective control peak temperatures.

CONCLUSIONS

Thermal Management

There is uncertainty associated with the heat output of some defense waste forms (e.g., variability in the isotopic content of future Hanford HLW glass) that can be readily accommodated in the disposal concepts presented here. If the thermal decay behavior of individual canisters can be bounded, which is simpler than more precise predictions, then a combination of decay storage (for short-lived fission products) and adjustment of repository spacing (mainly package-to-package spacing) is available. For the multi-pack concept, the ultimate measure to manage the hottest HLW is de-rating the packages (loading with fewer than five canisters) or deploying smaller multi-packs with fewer canisters. Another concept detail that could enhance thermal management flexibility is use of graphite or other admixtures in clay-based buffer material to enhance thermal conductivity (Section 3).

Engineering Feasibility

The most significant feasibility question raised by this report is constructability of in-tunnel "vaults" for emplacing multi-pack waste packages in crystalline rock. The clay buffer around the packages must be installed at a minimum dry density, which is generally greater than the effective density of clay pellets. The entire volume around the packages must be considered because homogenization will cause the clay to flow after hydration. Thus, it is apparent that compacted clay block must be used (neglecting the in situ compaction method proposed by AECL), with only sparing use of pellets to fill any extra void space. Whereas the Swiss concept for in-tunnel emplacement uses mostly pellets, that is for clay not crystalline rock, and buffer requirements as developed in Sweden are more stringent for crystalline.

The anticipated problems with emplacement are controlling the radiation hazard underground, and safely assembling and moving large, heavy assemblies. The multi-pack waste packages itself weights about 50 MT, and the buffer around it adds another 50 MT. The construction approach described in Section 2 would assemble the buffer and a steel liner tube for one package in situ, then emplace a package which would be the most challenging step. Any water inflow to the tunnel would need to be arrested by grouting prior to constructing vaults. When inserting the package into the liner tube, the tube could shift under the package weight because compacted clay is not an optimal structural material. Steel supports may be needed at each end of the tube, and the tube may need sufficient thickness and strength to support the package without help from the buffer clay. These are manageable improvements but additional complexity and materials would tend to cancel the cost advantages associated with fewer, larger waste packages.

Another approach is prefabrication. By limiting construction activities in the emplacement opening, it could be possible for that opening to be as small as 3 m in diameter, for emplacement of HLW multi-packs. A supercontainer with slightly smaller diameter could be conveyed into position on rail, or a water bearing such as that demonstrated for 46 MT supercontainers by Posiva (2012b). This would be done under remote control because the supercontainer would not provide enough shielding (limiting the total weight to approximately 100 MT). Fabrication of the 100 MT supercontainer could be done underground to avoid size and weight limitations of an access shaft or ramp. The prefabrication option is available but not recommended here because of low technical maturity. It could be more useful to compare the constructability and cost of constructing single-package vaults in situ (as described for multi-packs in Section 2) with using the KBS-3V approach for single canisters of HLW as well as DSNF (approaching 30,000 waste packages in total).

Post-closure Criticality Control

Neutron absorbing materials are available with the needed longevity in breached waste packages, to control post-closure criticality of DSNF. An approach using Gd-bearing shot was proposed previously (DOE 2008), and other materials could also work (e.g., particulate B_4C ceramic). The important point here is coordination is needed between repository siting and characterization, and canisterization of DSNF, so that appropriate neutron absorbing material can be added before the canisters are sealed. This is a possible schedule constraint that could be relaxed (preserving flexibility) by demonstrating neutron absorber longevity in a range of environments.

Safety

This report has not included generic performance assessment, but the disposal concepts proposed are likely to meet regulatory performance objectives because they are similar to other published concepts for which such findings are available. Measures such as expanded use of corrosion resistant materials, heavier wall thicknesses, and surface treatments are available to increase the longevity of engineered barriers.

REFERENCES

Bechthold, W., E. Smailos, S. Heusermann, W. Bollingerfehr, B. Bazargan Sabet, T. Rothfuchs, P. Kamlot, J. Grupa, S. Olivella and F.D. Hansen 2004. *Backfilling and Sealing of Underground Repositories for Radioactive Waste in Salt (BAMBUS II Project), Final Report*. EUR 20621, Nuclear Science and Technology, Luxembourg.

Biurrun, E. and K. Hahne, K. 1989. "Microcrack growing and long-term mechanical stability in a HLW deep-borehole repository in granite." *Waste Management '89: 15th International Waste Management Symposium Conference*. Tucson, AZ. February 26 to March 2, 1989.

Bollingerfehr, W., D. Buhmann, W. Filbert, S. Keller, J. Krone, A. Lommerzheim, J. Mönig, S. Mrugalla, N. Müller-Hoeppe, J. R. Weber and J. Wolf 2013. *Status of the safety concept and safety demonstration for an HLW repository in salt: Summary report* (in English). TEC-15-2013-AB. DBE Technology GmbH, Peine, Germany. December, 2013.

Bottomley, D.J., D.C. Gregoire and K.G. Raven 1994. "Saline groundwaters and brines in the Canadian Shield: Geochemical and isotopic evidence for a residual evaporite brine component." *Geochimica et Cosmochimica Acta*. V.58, No. 5. pp. 1483-1498.

Brady, P.V., B.W. Arnold, G.A. Freeze, P.N. Swift, S.J. Bauer, J.L. Kanney, R.P. Rechard and J.S. Stein 2009. *Deep Borehole Disposal of High-Level Radioactive Waste*. SAND2009-4401. Sandia National Laboratories, Albuquerque, NM.

Bryan, C.R., D.G. Enos, L. Brush, A. Miller, K. Norman and N.R. Brown 2011. *Engineered Materials Performance: Gap Analysis and Status of Existing Work*. FCRD-USED-2011-000407. U.S. Department of Energy, Office of Used Nuclear Fuel Disposition.

BSC (Bechtel-SAIC Co.) 2004. *Initial Radionuclide Inventories*. ANL-WIS-MD-000020 REV 01. U.S. Department of Energy, Office of Civilian Radioactive Waste Management, Las Vegas, NV.

Carter, J.T., F. Hansen, R. Kehrman and T. Hayes 2011. *A Generic Salt Repository for Disposal of Waste from a Spent Nuclear Fuel Recycle Facility*. SRNL-RP-2011-00149 Rev. 0. Savannah River National Laboratory, Aiken, SC.

Carter, J. T., Rodwell, P. O, Robinson, B., Kehrman, B. 2012. Costing Study for a Generic Salt Repository: Systems Engineering and Analysis in Support of a Policy Review of Comingling Decision and Related System Design Considerations, FCRD-UFD-2012-000113, Rev. 1., July 2012.

Clayton, D.J. and C.W. Gable 2009. *3-D Thermal Analyses of High-Level Waste Emplaced in a Generic Salt Repository*. AFCI-WAST-PMO-MI-DV-2009-000002. U.S. Department of Energy, Office of Nuclear Fuel Recycling.

CRWMS M&O (Civilian Radioactive Waste Management System – Management & Operating Contractor) 1999. *License Application Design Selection Report*. B00000000-01717-4600-00123 REV 01 ICN 01. U.S. Department of Energy, Office of Civilian Radioactive Waste Management, Las Vegas, NV.

Dickinson, M., D. Roberts and D. Holton 2015. *Geological Disposal, High-heat-generating Wastes Project: Final Report* (Draft 4). Amec Foster Wheeler for Radioactive Waste Management, Ltd. August, 2015.

DOE (U.S. Department of Energy) 1986. *Environmental Assessment Overview: Deaf Smith County Site, Texas*. DOE/RW-75. Office of Civilian Radioactive Waste Management, Washington, DC.

DOE (U.S. Department of Energy) 1988. *Salt Repository Project Closeout Status Report*. BMI/ONWI/C-28. Prepared by the Salt Repository Project Office, Battelle Memorial Institute, Columbus, OH.

DOE (U.S. Department of Energy) 2008. *Yucca Mountain Repository License Application for Construction Authorization*. DOE/RW-0573. Washington, D.C.: U.S. Department of Energy.

DOE (U.S. Department of Energy) 2014a. *Assessment of Disposal Options for DOE-Managed High-Level Radioactive Waste and Spent Nuclear Fuel*. (http://www.energy.gov/ne/downloads/assessment-disposal-options-doe-managed-high-level-radioactive-waste-and-spent-nuclear).

DOE (U.S. Department of Energy) 2014b. *Evaluation of Options for Permanent Geologic Disposal of Spent Nuclear Fuel and High-Level Radioactive Waste in Support of a Comprehensive National Nuclear Fuel Cycle Strategy – Volume 1*. FCRD-UFD-2013-000371 Rev. 1. U.S. Department of Energy, Office of Used Nuclear Fuel Disposition.

DOE (U.S. Department of Energy) 2014c. *Compliance Recertification Application 2014 for the Waste Isolation Pilot Plant*. CRA-2014. Waste Isolation Pilot Plant, Carlsbad Field Office, Carlsbad, New Mexico. (http://www.wipp.energy.gov/library/CRA/CRA-2014.html).

EPRI (Electric Power Research Institute) 2010. *EPRI Review of Geologic Disposal for Used Fuel and High Level Radioactive Waste: Volume III—Review of National Repository Programs*. 1021614, Final Report. December, 2010.

ESDRED (Engineering Studies and Demonstrations of Repository Design) 2005. *Proceedings of the 2nd Low pH Workshop, Madrid, Spain, June 15-16, 2005*. G. Bäckblom, editor. ESDRED is a joint project of 13 international partners and the EURATOM Framework Program (http://www.esdred.info/medias/Mod5-WP2-D2_ProceedingsLowpHWorkshop_31Aug05.pdf).

Fairhurst, C. 2012. *Current Approaches to Surface-Underground Transfer of High-Level Nuclear Waste*. Itasca Consulting Group, Minneapolis, MN.

Filbert, W., E. Biurrun, W. Bollingerfehr, B. Haverkamp and R. Graf 2010a. "Optimization of Spent Fuel Direct Disposal Technology for a Geological Repository in Rock Salt in Germany–10504." *Proceedings of Waste Management 2010*. March 7-11, Phoenix, AZ.

Filbert, W., M. Kreienmeyer, M. Pöhler and N. Niehues 2010b. "Operational Safety and Radiation Protection Considerations in Designing an HLW Repository in Germany." International Conference on Underground Disposal Unit Design & Emplacement Processes for a Deep Geological Repository. Prague, June 16-18, 2008.

Fluor (Fluor Technology Inc.) 1987. *Site Characterization Plan Conceptual Design Report for a High-Level Nuclear Waste Repository in Salt, Vertical Emplacement Mode (Volume 1)*. DOE/CH/46656-15(1). Prepared for the U.S. Department of Energy, Office of Civilian Radioactive Waste Management, Salt Repository Project Office.

Freire-Lista, D.M., R. Fort and M.J. Vara-Muriel 2016. "Thermal stress-induced microcracking in building granite." *Engineering Geology*. V.206. pp. 83-93.

Garisto, F., J. Avis, T. Chshyolkova, P. Gierszewski, M. Gobien, C. Kitson, T. Melnyk, J. Miller, R. Walsh, and L. Wojciechowski 2010. *Glaciation Scenario: Safety Assessment for a Deep Geological Repository for Used Fuel*. Nuclear Waste Management Organization, Toronto, Ontario.

Garitte, B., S. Köhler, H.R. Müller, T. Sakaki, T. Vogt, H. Weber, M. Holl, M. Plötze, V. Wetzig, M. Tschudi, H. Jenni, T. Vietor, E. Carrera, G. Wieland, S. Teodori, J.-L. Garcia-Siñeriz Martinez

and F. Jacobs 2016. "Horizontal bentonite backfilling and concrete plug for the Full-Scale Emplacement (FE) Experiment at the Mont Terri URL: requirements, design, instrumentation and emplacement." *DOPAS-Full Scale Demonstration of Plugs and Seals*. Turku, Finland. May 26, 2016.

Gascoyne, M. 2004. "Hydrogeochemistry, groundwater ages and sources of salts in a granitic batholith on the Canadian Shield, southeastern Manitoba." *Applied Geochemistry*. V.19, pp. 519-560.

Greene, S.R., J.S. Medford and S.A. Macy 2013. *Storage and Transport Cask Data for Used Commercial Nuclear Fuel*. ATI-TR-13047. Energx. Oak Ridge, TN.

Graf, R., K.-J. Brammer and W. Filbert 2012 (in German). "Direkte Endlagerung von Transport- und Lagerbehältern - ein umsetzbares technisches Konzept." *Jahrestagung Kerntechnik* 2012. Stuttgart. May, 2012.

Hammond, G.E., P.C. Lichtner and R.T. Mills, 2014. Evaluating the Performance of Parallel Subsurface Simulators: An Illustrative Example with PFLOTRAN, *Water Resources Research*, 50, doi:10.1002/2012WR013483.

Hansen, F.D., K.L. Kuhlman and S. Sobolik 2016. *Considerations of the Differences between Bedded and Domal Salt Pertaining to Disposal of Heat-Generating Nuclear Waste*. FCRD-UFRD-2016-000441. U.S. Department of Energy, Office of Used Nuclear Fuel Disposition.

Hardin, E. and D. Sassani 2011. "Application of the Prefabricated EBS Concept in Unsaturated, Oxidizing Host Media." *Proceedings: 13th International High-Level Radioactive Waste Management Conference*. Albuquerque, NM. April, 2011. American Nuclear Society.

Hardin, E., J. Blink, H. Greenberg, M. Sutton, M. Fratoni, J. Carter, M. Dupont, and R. Howard 2011. Generic Repository Design Concepts and Thermal Analysis, FCRD-USED-2011-000143, Rev. 0.

Hardin E., T. Hadgu, D. Clayton, R. Howard, H. Greenberg, J. Blink, M. Sharma, M. Sutton, J. Carter, M. Dupont and P. Rodwell 2012. *Repository Reference Disposal Concepts and Thermal Load Management Analysis*. FCRD-UFD-2012-000219, Rev. 2. U.S. Department of Energy, Office of Used Nuclear Fuel Disposition.

Hardin, E., D. Clayton, M. Martinez, G. Nieder-Westermann, R. Howard, H. Greenberg, J. Blink and T. Buscheck 2013a. *Collaborative Report on Disposal Concepts*. FCRD-UFD-2013-000170 Rev. 0. U.S. Department of Energy, Office of Used Nuclear Fuel Disposition.

Hardin, E., D. Clayton, R.L. Howard, J.M. Scaglione, E. Pierce, K. Banerjee, M.D. Voegele, H. Greenberg, J. Wen, T. Buscheck, J.T. Carter, T. Severynse and W.M Nutt 2013b. *Preliminary Report on Dual-Purpose Canister Disposal Alternatives (FY13)*. FCRD-UFD-2013-000171 Rev. 0. U.S. Department of Energy, Office of Used Nuclear Fuel Disposition.

Hardin, E., C. Bryan and M. Voegele 2013c. *Features, Events and Processes and Performance Assessment Scenarios for Alternative Dual-Purpose Canister Disposal Concepts*. FCRD-UFD-2013-000172 Rev. 0. U.S. Department of Energy, Office of Used Nuclear Fuel Disposition.

Hardin, E. 2014. *Review of Underground Construction Methods and Opening Stability for Repositories in Clay/Shale Media*. FCRD-UFD-2014-000330 Rev. 0. U.S. Department of Energy, Office of Used Nuclear Fuel Disposition.

Hardin, E., L. Price, E. Kalinina, T. Hadgu, A. Ilgen, C. Bryan, J. Scaglione, K. Banerjee, J. Clarity, R. Jubin, V. Sobes, R. Howard, J. Carter, T. Severynse and F. Perry 2015. *Summary of*

Investigations on Technical Feasibility of Direct Disposal of Dual-Purpose Canisters. FCRD-UFD-2015-000129 Rev. 0. U.S. Department of Energy, Office of Used Nuclear Fuel Disposition.

Hardin, E. and E. Kalinina 2016. *Cost Estimation Inputs for Spent Nuclear Fuel Geologic Disposal Concepts (Revision 1)*. SAND2016-0235. Sandia National Laboratories, Albuquerque, NM.

Jobmann, J. and G. Buntebarth 2009. "Influence of graphite and quartz addition on the thermo-physical properties of bentonite for sealing heat-generating waste." *Applied Clay Science*. V. 44, pp. 206-210.

Johnson, L.H., J.C. Tait, D.W. Shoesmith, J.L. Crosthwaite and M.N. Gray 1994. *The Disposal of Canada's Nuclear Fuel Waste: Engineered Barriers Alternatives*. AECL-10718. Atomic Energy of Canada, Ltd. Pinawa, Manitoba.

Lockner, D. 1993. "Room Temperature Creep in Saturated Granite." *Journal of Geophysical Research*. V.98, No. B1. pp. 475-487.

Mariner, P.E., J.H. Lee, E.L. Hardin, F.D. Hansen, G.A. Freeze, A.S. Lord, B. Goldstein and R.H. Price 2011. *Granite Disposal of U.S. High-Level Radioactive Waste*. SAND2011-6203. Sandia National Laboratories, Albuquerque, NM. August, 2011.

Martin, C.D., R. Christiansson and J. Soderhall 2001. *Rock stability considerations for siting and constructing a KBS-3 repository: Based on experiences from Äspö HRL, AECL's URL, tunnelling and mining*. TR-01-38. Swedish Nuclear Fuel and Waste Management Co.(SKB). (www.skb.se/publications)

Martin, R.J. and W.F. Brace 1972. "Time-dependent crack growth in quartz and its application to the creep of rocks." *Journal of Geophysical Research*. V.77, No. 8. pp. 1406-1419.

Matteo, E.N. and T. Hagdu 2015. *DOE-Managed HLW and SNF Research: FY15 EBS and Thermal Analysis Work Package Status*. FCRD-UFD-2015-000803, Rev. 1.U.S. Department of Energy, Office of Used Nuclear Fuel Disposition.

McKinley, I.G. 1997. "Engineering for Robustness: An Approach to Optimising HLW Disposal Concepts." *Waste Management*. V. 17, N. 1. pp. 1–8.

McKinley, I.G., H. Kawamura and H. Tsuchi 2001. "Moving HLW-EBS Concepts in to the 21st Century." *Material Research Society Symposium Proceedings*. V. 663.

McKinley, I.G., F.B. Neall, H. Kawamura and H. Umeki 2006. "Geochemical optimization of a disposal system for high-level radioactive waste." *Journal of Geochemical Exploration*. V. 90. pp. 1–8.

Mora, C.J. 1999. *Sandia and the Waste Isolation Pilot Plant 1974-1999*. SAND99-1482. Sandia National Laboratories, Albuquerque, NM.

NAGRA (National Cooperative for the Disposal of Radioactive Waste) 1994. *Kristallin-I Safety Assessment Report*. NTB-93-22. July, 1994. (www.nagra.ch).

NAGRA (National Cooperative for the Disposal of Radioactive Waste) 1995. *Some Variations of the Kristallin-I Near-Field Model*. NTB-95-09. November, 1995. (www.nagra.ch).

NDA (Nuclear Dispositioning Authority) 2010. *Geological Disposal: Generic Disposal Facility Designs*. NDA/RWMD/048. December, 2010.

Nelson, R.A. and D.S. White 2008. "Shielded Payload Containers Will Enhance the Safety and Efficiency of the DOE's Remote Handled Transuranic Waste Disposal Operations – 8199." Waste Management 2008 Conference, Phoenix, AZ. February 24-28, 2008.

ORNL (Oak Ridge National Laboratory) 2015. *Rationale for the Performance Specification for Standardized Transportation, Aging, and Disposal Canister Systems*. FCRD-NFST-2015-000106 Rev. 1. U.S. Department of Energy, Nuclear Fuel Storage and Transportation Project.

Perry, F.V. 2014. *Survey of Chloride Concentrations in Formation (Pore) Waters of Crystalline Rocks and Shale*. FCRD-UFD-2014-000514. U.S. Department of Energy, Office of Used Nuclear Fuel Disposition. Las Vegas, NV.

Posiva 2010. *Models and Data Report 2010*. POSIVA 2010-01. Posiva Oy, Olkiluoto, Finland.

Posiva 2012a. *Safety Case for the Disposal of Spent Nuclear Fuel at Olkiluoto–Description of the Disposal System 2012*. POSIVA 2012-05. Posiva Oy, Olkiluoto, Finland (www.posiva.fi).

Posiva 2012b. *Description of KBS-3H Design Variant*. POSIVA 2012-50. Posiva Oy, Olkiluoto, Finland (www.posiva.fi).

Posiva 2013. *KBS-3H Complementary Studies 2008–2010*. POSIVA 2013-03. Posiva Oy, Olkiluoto, Finland (www.posiva.fi).

Read, R.S. and C.D. Martin 1996. *Technical Summary of AECL's Mine-By Experiment, Phase 1: Excavation Response*. AECL-11311. Atomic Energy of Canada, Ltd., Whiteshell Laboratories, Pinawa, Manitoba.

Rechard, R.P., B. Goldstein, L.H. Brush, J.A. Blink, M. Sutton, and F.V. Perry 2011. *Basis for Identification of Disposal Options for Research and Development for Used Nuclear Fuel and High-Level Waste*. FCRD-USED-2011-000071. U.S. Department of Energy, Office of Used Nuclear Fuel Disposition.

Rechard, R.P., L.C. Sanchez, C.T. Stockman and H.R. Trellue 1999. *Consideration of Nuclear Criticality When Disposing of Transuranic Waste at the Waste Isolation Pilot Plant*. SAND99-2898. Sandia National Laboratories, Albuquerque, NM.

Rigali, M.J., S. Pye and E. Hardin 2016. *Large Diameter Deep Borehole (LDDB) Disposal Design Option for Vitrified High-Level Waste (HLW) and Granular Wastes*. SAND2016-3312. Sandia National Laboratories, Albuquerque, NM.

Sevougian, S.D., G.A. Freeze, P. Vaughn and P. Mariner 2013. *Update to the Salt R&D Reference Case*. FCRD-UFD-2013-000368. U.S. Department of Energy, Office of Used Nuclear Fuel Disposition.

Sevougian, S.D., G.A. Freeze, W.P. Gardner, G.E. Hammond and P. Mariner 2014. *Performance Assessment Modeling and Sensitivity Analyses of Generic Disposal System Concepts*. FCRD-UFD-2014-000320. U.S. Department of Energy, Office of Used Nuclear Fuel Disposition.

Simmons, G.R. and P. Baumgartner 1994. *The Disposal of Canada's Nuclear Fuel Waste: Engineering for a Disposal Facility*. AECL-10715. Atomic Energy of Canada, Ltd., Whiteshell Laboratories, Pinawa, Manitoba.

SKBF/SKB (Swedish Nuclear Fuel Supply Company, Division KBS) 1983a. *Final storage of spent nuclear fuel-KBS-3: Summary* (Volume 1). Swedish Nuclear Fuel Supply Company Report, KBS-3.

SKBF/SKB (Swedish Nuclear Fuel Supply Company, Division KBS) 1983b. *Final storage of spent nuclear fuel-KBS-3: Barriers* (Volume 3). Swedish Nuclear Fuel Supply Company Report, KBS-3.

SKB (Swedish Nuclear Fuel and Waste Management Co.) 1993. *Project on alternative systems study (PASS), final report*. TR-93-04 (www.skb.se/publications).

SKB (Swedish Nuclear Fuel and Waste Management Co.) 1995. *Copper canister with cast inner component: Amendment to project on Alternative Systems Study (PASS)*. TR-95-02 (www.skb.se/publications).

SKB (Swedish Nuclear Fuel and Waste Management Co.) 2008. *KBS-3H Horizontal emplacement technique of supercontainer and distance blocks: Test evaluation report*. TR-08-43 (www.skb.se/publications).

SKB (Swedish Nuclear Fuel and Waste Management Co.) 2010. *Long-term safety for the final repository for spent nuclear fuel at Forsmark: Main report of the SR-Site project* (3 volumes). TR-11-01 (www.skb.se/publications).

SKB (Swedish Nuclear Fuel and Waste Management Co.) 2011. *Long-term safety for the final repository for spent nuclear fuel at Forsmark: Main report of the SR-Site project* (3 volumes). TR-11-01 (www.skb.se/publications).

SKB (Swedish Nuclear Fuel and Waste Management Co.) 2013. *Spent Fuel Geologic Repository Consultation Prepared for Savannah River Nuclear Solutions, LLC: Final Report – September 2013*. SKB International Report 166 (www.skb.se/publications).

SNL (Sandia National Laboratories) 2007. *Radionuclide Screening*. ANL-WIS-MD-000006 REV 02. U.S. Department of Energy, Office of Civilian Radioactive Waste Management, Las Vegas, NV.

SNL (Sandia National Laboratories) 2014. *Evaluation of Options for Permanent Geologic Disposal of Spent Nuclear Fuel and High-Level Radioactive Waste in Support of a Comprehensive National Nuclear Fuel Cycle Strategy – Volume I*. FCRD-UFD-2013-000371 Rev. 1. U.S. Department of Energy, Office of Used Nuclear Fuel Disposition.

SRNL (Savannah River National Laboratory) 2015. *Generic Repository Cost Estimates*. FCRD-UFD-2015-000740 Rev. 0. U.S. Department of Energy, Office of Used Nuclear Fuel Disposition.

Stein, E. R., S. D. Sevougian, G. E. Hammond, J. M. Frederick, and P. E. Mariner 2016. *D-Repo Performance Assessment: Crystalline Reference Case*. SAND2016-5405 PE. Sandia National Laboratories, Albuquerque, NM.

Wang, M., Chen, Y., Zhou, S., Hu R., and Zhou, C. 2015. A homogenization-based model for the effective thermal conductivity of bentonite-sand-based buffer material, *International Communications in Heat Transfer*, 86 (2015) 43-49.

Watson, S., T. Hicks, K. Thatcher, R. Shaw1, S. Doudou, T. Baldwin, G. Towler, L. Limer, D. Hutchinson, J. Smith, S. Majhu and Nick Clarke 2014. *Disposal Concepts for Multi-Purpose Containers*. QRS-1567G-R7 Version 1. Radioactive Waste Management, Ltd. September, 2014

Westinghouse (Westinghouse Electric Corporation) 1982. *Engineered Waste Package Conceptual Design: Defense high-Level Waste (Form 1), Commercial High-Level Waste (Form 1), and Spent Fuel (Form 2) Disposal in Salt*. Prepared for Battelle Project Management Division, Office of Nuclear Waste Isolation, U.S. Department of Energy.

Wilson, J. 2016. Decay Heat of Selected DOE Defense Waste Materials, FCRD-UFD-2016-000636, SRNL-RP-2016-00249.

Appendix A - Packaging Concept for Defense Waste Disposal in Crystalline Rock

The safety analysis for a mined granite repository depends largely on waste package preservation. In crystalline rock, waste packages are preserved by the high mechanical stability of the excavations, the diffusive barrier of the buffer, and favorable chemical conditions (Mariner et al., 2011). For this packaging concept the waste package outer layer is assumed to be copper, the preferred material in current granite repository concepts in Sweden, Finland, and Canada (SKB 2011; Posiva 2010; Garisto et al. 2010).

Based on existing and projected volumes of DOE-managed HLW (SNL 2014) approximately 80% of the waste is HLW glass. These waste packages have relatively low thermal outputs allowing for the use of Co-disposal packages similar to those proposed in Mariner 2011. The canisters of HLW glass from Savannah River are designed for direct loading into the 5-DHLW/DOE SNF Short Codisposal package (Figure 1). The projected canisters of Hanford HLW glass are designed for direct loading into the 5-DHLW/DOE SNF Long Codisposal package (Figure 4).

5-DHLW/DOE SNF Short Codisposal Package—As shown in Figure 1, this configuration holds up to five HLW canisters from the Savannah River site having a diameter of 24 in. and length of 118 in. along with an 18-in. standardized short DOE SNF canister in the center. Alternatively, it can be loaded with a 24-in. standardized short DOE SNF canister in a peripheral location if the center location is empty. With this loading pattern, the remaining four peripheral locations are loaded with HLW canisters. Or, it can be loaded with up to five HLW canisters in the peripheral locations with the center location empty. This latter option has been selected for the PA performed in this report. The existing and projected 7,824 canisters of Savanah River glass can be loaded into a total of 1,565 Co-disposal canisters.

5-DHLW/DOE SNF Long Codisposal Package—This configuration is identical to the 5-DHLW/DOE Short Codisposal waste package, except for the length. As shown in Figure 1, this configuration holds up to five HLW canisters from the Hanford site, having a nominal diameter of 24 in. and nominal length of 180 in. along with an 18-in. standardized long DOE SNF canister in the center. Alternatively, it can be loaded with a 24-in. standardized long DOE SNF canister in a peripheral location if the center location is empty. With this loading pattern, the peripheral locations are loaded with HLW waste canisters. Or, it can be loaded with up to five HLW canisters in the peripheral locations with the center location empty. Once again this latter option has been selected for the PA performed in this report. The projected 10,586 canisters of Hanford glass can be loaded into a total of 2,118 Co-disposal canisters.

1-HIP Calcine Package (Preferred Alternative)—In 2010, DOE issued a Record of Decision (75 FR 137) documenting the selection of hot isostatic pressing (HIP) technology to treat the calcine waste and produce a glass ceramic waste form. The calcine waste will be treated by the HIP process with silica and titanium additives to produce a glass ceramic waste form that eliminates the Resource Conservation and Recovery Act (RCRA) hazardous waste characteristics (75 FR 137). After the HIP process, the compressed hipped cans filled with glass ceramic waste will be placed in canisters 5.5-ft diameter by 17-ft tall that are presently certified for SNF (similar in dimension to the Naval SNF canister). A total of 3,200 of these canisters will be produced for disposal.

1-HIP Calcine Package (Option 1)—In its Record of Decision, the DOE retains an option to HIP the calcine waste without silica and titanium additives. This has the advantage of reducing the number of canisters produced to 1,600 5.5-ft diameter by 17-ft tall canisters. However, this

alternative calcine waste form would include the RCRA waste constituents and would only be acceptable for disposal at a facility that accepts RCRA wastes without additional regulatory/institutional considerations for these constituents.

5-Vitrified Calcine Codisposal Package (Option 2)— In its record of decision the DOE also retains an option to vitrify granular calcine waste. Should it exercise this option, the projected 11,400 canisters of vitrified calcine could be loaded into a total of 2,280 Co-disposal canisters. This option also eliminates the RCRA hazardous waste characteristics (75 FR 137).

DSNF Disposal Packages—DOE plans to package most of its SNF (about 98% of the metric tons of heavy metal) into MCOs and standardized canisters suitable for storage, transport, and disposal without the need to be re-opened (DOE 2007, Section 3.2). A standardized disposal canister design has been developed which includes canisters of 18- and 24-in. diameter and 10- and 15-ft length (Table 1). These disposal canisters could be placed in corrosion resistant overpacks and then be emplaced individually in vertical boreholes in the granite drifts. It is important to note that the G6 metallic sodium-bonded fuel (Table 1) will require treatment before packaging and disposal because of the highly reactive nature of metallic sodium (see below).

Cs/Sr capsule Disposal Packages (Vitrified)—As its Preferred Alternative, DOE plans to vitrify the 1,688 Cs and Sr capsules currently stored at Hanford. This will produce a projected 340 HLW Glass canisters. At an estimated thermal output of 905W per canister these canisters should be individual overpacks for disposal.

Cs/Sr capsule Disposal Packages (Direct Disposal)—The DOE retains an option for direct disposal of the Cs and Sr capsules. In this option capsules are placed directly in a disposal overpack (24" dia by 120"). Assuming a loading of six capsules per canister the packages will have an average thermal output of ~1,000W and should be packaged in individual overpacks.

Sodium Bearing Waste/Short Codisposal Package—Treated sodium bearing waste (SBW) at Idaho National Laboratory will be packaged into 688 120 in. long and 26in. in diameter SBW canisters. Four SBW canisters could then be loaded into a total of 172 co-disposal canisters for disposal.

Sodium Bonded Waste (EMT Treated) Disposal Package—The EMT treated waste will produce a salt waste. It will be further treated to produce two wastes: a glass bonded sodalite and metal waste that will be cast into ingots. The glass bonded sodalite is commonly referred to as the ceramic waste form. The ceramic waste form is being formed as a right cylinder up to 1 m tall with an outer diameter of about 0.5 m while the EMT metallic waste stream will be immobilized by melting it in an induction furnace to produce an alloyed metallic ingot. The two waste forms will be packaged together in a total of 148 24" diameter by 118" long canisters for disposal.

Salt Waste from EMT Direct Disposal Package—The salt wastes from EMT of sodium-bonded fuels could also be disposed of directly without further treatment. A thin walled stainless steel container with diameter of 25 cm and length of 50.5 cm was used to hold 40 kg of the EMT salt waste form. A larger canister was listed as holding three of these canisters (120 kg EMT salt waste form; 27 cm outer diameter; 155 cm length) and is to be inserted into a cylindrical thicker-walled overpack (with welded lid) to complete the waste package. These packages are then emplaced in 25 24" diameter by 118" disposal canisters.

Naval SNF Package—There are two canister sizes, one short and one long, there are two naval waste package configurations. The Naval Short waste package configuration holds one short naval SNF canister with a maximum diameter of 66.5 in. and a maximum length of 187 in. The Naval Long waste package configuration holds one long naval SNF canister with a maximum diameter of 66.5 in. and a maximum length of 212 in. The Naval SNF is limited to a total of 11 canisters that have a thermal output of less than 1,000W.

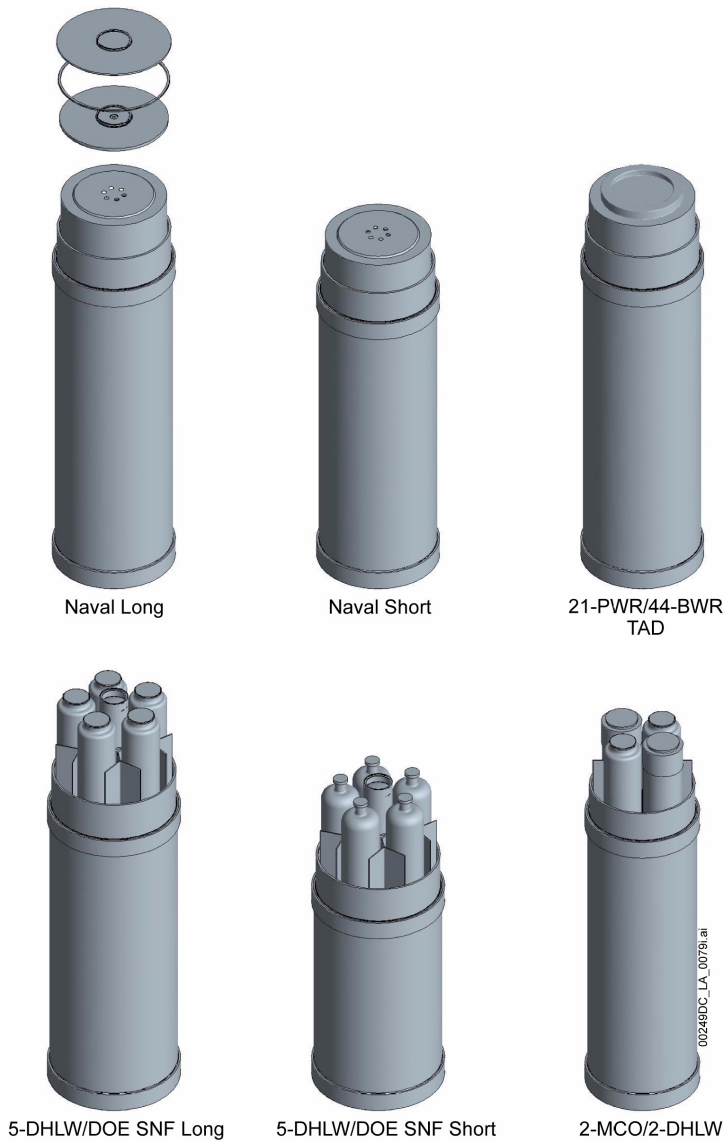

Figure 4. The co-disposal package (5-DHLW/DOE SNF Long and 5-DHLW/DOE SNF Short) holds five HLW glass canisters and one DSNF canister. In alternative packaging configurations it can hold: (1) five HLW canisters without a DSNF canister; (2) two HLW canisters and two multi-canister overpacks (containing N-reactor fuel); and (3) similar to the 2-MCO/2-DHLW configuration it could be configured to hold four SBW or calcine direct disposal canisters (26 inches in diameter.)

The layout and arrangement of waste packages in a granite repository include (1) waste package emplacement in vertical boreholes drilled into the floor in horizontal emplacement tunnels and/or emplacement in horizontal boreholes drilled in the tunnel walls (Figure 5). Each of these concepts would include a clay buffer surrounding waste packages, a mixture of clay and crushed rock to be used as backfill, and various grouting and sealing processes.

In this preliminary granite repository design, we have chosen to use horizontal borehole emplacement for the large packages including the (Co-disposal, HIP calcine and Naval Fuel) and vertical borehole emplacement for the small waste packages (Table 2).

Table A 1. Waste Groups and packaging considerations for a Granite Hosted Defense Waste Repository.

Waste Group	Description	Waste Form	Waste Package Dimensions	[b] Number of Waste Packages	Average Thermal output per package (W)	Granite Disposal Package Type	Number of Disposal Packages	Granite Emplacement Mode
WG3 – HLW Glass	Existing SRS HLW Glass	SRS canister	24" dia by 118"	3,339	30	Co-disposal Package (short)	668	Horizontal Borehole
	Projected Hanford HLW Glass	Hanford canister	24" dia by 177"	10,586	29	Co-disposal Package (long)	2,118	Horizontal Borehole
	Projected SRS HLW Glass	SRS canister	24" dia by 118"	4,485	30	Co-disposal Package (short)	897	Horizontal Borehole
	Calcine Waste (vitrified)	Vitrified Calcine Waste Canister	24" dia by 118"	11,400	1.2-15.4	Co-disposal Package (short)	2,280	Horizontal Borehole
	Cs/Sr capsules at Hanford (vitrified)	Vitrified Cs/Sr waste in Hanford HLW Glass canister	24" dia by 177"	340	905	Individual disposal overpack	340	Vertical Borehole
WG4 – other Engineered HLW forms	[c] *Metallic sodium bonded*	Glass-bonded sodalite from EMT Metal waste from EMT	Copackaged in 24" dia by 118" canister	148 total combined	2,240	Individual disposal overpack	148	Vertical Borehole
	[d] *Calcine waste Hot Isostatic Pressing (HIP – A)*	HIP canister (encloses 10 HIP cans)	66" dia by 204"	3,200	40-540	Individual disposal overpack	3,200	Horizontal Borehole
	Calcine waste (HIP – B)	HIP canister (encloses 10 HIP cans)	66" dia by 204"	1,600	80-1080	Individual disposal overpack	1,600	Horizontal Borehole

Table A 1 Continued.

Waste Group	Description	Waste Form	Waste Package Dimensions	[b] Number of Waste Packages	Average Thermal output per package (W)	Disposal Package Type (Granite)	Number of Disposal Packages	Granite Emplacement Mode
WG5 – Metallic Spent Fuels	Heterogeneous mix of DSNF	Multi-canister Overpack (MCO)	24" dia by 166.4"	413	500 or less			
WG6 – Sodium bonded fuels (Na removed)						Individual disposal overpack	413	Vertical Borehole
WG7 – DOE oxide fuels								
WG9 – coated particle spent fuels		18x10 18x15 24x10 24x15	18" dia by 10' 18" dia by 15' 24" dia by 10' 24" dia by 15'	1,506 1,474 133 27		Individual disposal overpack	1,506 1,474 133 27	Vertical Borehole
WG8 –salt, granular solids, powders	*Metallic sodium bonded*	Salt waste from EMT direct disposal canister	24"dia by 118"	25	2,240	Individual disposal overpack	25	Vertical Borehole
	Calcine Waste (Direct Disposal)	Direct disposal canister	RH-72B 26" dia by 121"	4,900	2.4-36	Co-disposal Package	1,225	Horizontal Borehole
	Sodium bearing waste (SBW) at INL	SBW canister	26" dia by 120"	688	2.5W	Co-disposal Package	172	Horizontal Borehole
	Cs/Sr Capsules (Direct Disposal)	Untreated in overpack/canister	24" dia by 120" (6 capsules per canister)	Cs- 267 Sr - 121	800-1170	Individual disposal overpack	Cs- 267 Sr – 121	Vertical Borehole
WG10 – Naval fuel	Naval SNF <1000W	Naval SNF canister	66" dia by 187" 66" dia by 201.5"	11	<1,000	Naval SNF canister	11	Horizontal Borehole

Appendix B - Packaging Concept for Defense Waste Disposal in Salt Host Media

- This packaging and disposal concept for this preliminary repository design places individual canisters including those shown in Figures 1 and 2. These canisters will be placed directly on the salt and immediately backfills the alcove with crushed salt as shown in Figure 3 (Hardin et al., 2012). This concept also does not rely upon additional containerization of the waste packages.

Packaging and number of packages to dispose the various waste forms considered for inclusion in a Defense Waste Repository are provided in Table 1. The majority of these packages include HLW glass canisters (Figure 1) and DOE SNF packages (Figure 2). Several of the wastes (e.g. calcine at INL, Cs/Sr capsules and the metallic sodium bonded waste) have more than one treatment option and an associated packaging option. All of these options are included in Table 1. Also, it is important to recognize that a 400-ton capacity hoist, which would be needed to transfer Naval fuel to the underground is beyond current mining industry use. This will necessitate the development of a high capacity hoist for the disposal of the Naval Fuel or the consideration of options such as repackaging the Naval Fuel Canisters into smaller packages that could more readily be accommodated by standard industry shaft hoists (Carter et al., 2011).

Table B 1. Waste Groups and packaging for a Salt Hosted Defense Waste Repository

Waste Group	Description	Waste Form	Waste Package Dimensions	[b] Number of Waste Packages	Average Thermal output per package (W)	Salt Disposal Package Type	Number of Disposal Packages	Salt Emplacement Mode
WG3 – HLW Glass	Existing SRS HLW Glass	SRS canister	24" dia by 118"	3,339	30	As Packaged	3,339	Horizontal
	Projected Hanford HLW Glass	Hanford canister	24" dia by 177"	10,586	29	As Packaged	10,586	Horizontal
	Projected SRS HLW Glass	SRS canister	24" dia by 118"	4,485	30	As Packaged	4,485	Horizontal
	Calcine Waste (vitrified)	Vitrified Calcine Waste Canister	24" dia by 118"	11,400	1.2-15.4	As Packaged	11,400	Horizontal
	Cs/Sr capsules at Hanford (vitrified)	Vitrified Cs/Sr waste in Hanford HLW Glass canister	24" dia by 177"	340	905	As Packaged	340	Horizontal
WG4 – other Engineered HLW forms	[c] *Metallic sodium bonded*	Glass-bonded sodalite from EMT	24"dia by 118"	148 total combined		As Packaged		Horizontal
		Metal waste from EMT	24"dia by 118"		negligible	As Packaged		Horizontal
	[d] *Calcine waste Hot Isostatic Pressing (HIP – A)*	HIP canister (encloses 10 HIP cans)	66" dia by 204"	3,200	40-540	As Packaged	3,200	Horizontal
	Calcine waste (HIP – B)	HIP canister (encloses 10 HIP cans)	66" dia by 204"	1,600	80-1080	As Packaged	1,600	Horizontal

Table 1 Continued.

Waste Group	Description	Waste Form	Waste Package Dimensions	[b] Number of Waste Packages	Average Thermal output per package (W)	Disposal Package Type (Salt)	Number of Disposal Packages	Salt Emplacement Mode
WG5 – Metallic Spent Fuels	Heterogeneous mix of DSNF	Multi-canister Overpack (MCO)	24" dia by 166.4"	413	500 or less			
WG6 – Sodium bonded fuels (Na removed)						As Packaged	413	Horizontal
WG7 – DOE oxide fuels				1,506				
WG9 – coated particle spent fuels		18x10 18x15 24x10 24x15	18" dia by 10' 18" dia by 15' 24" dia by 10' 24" dia by 15'	1,474 133 27		As Packaged	1,506 1,474 133 27	Horizontal
WG8 –salt, granular solids, powders	*Metallic sodium bonded*	Salt waste from EMT direct disposal canister	24"dia by 118"	64	2,240	As Packaged	64	Horizontal
	Calcine Waste (Direct Disposal)	Direct disposal canister	RH-72B 26" dia by 121"	4,900	2.4-36	As Packaged	4,900	Horizontal
	Sodium bearing waste (SBW) at INL	SBW canister	26" dia by 120"	688	2.5W	As Packaged	688	Horizontal
	Cs/Sr Capsules (Direct Disposal)	Untreated in overpack/canister	24" dia by 120" (6 capsules per canister)	Cs- 267 Sr - 121	800-1170	As Packaged	Cs- 267 Sr – 121	Horizontal
WG10 – Naval fuel	Naval SNF <1000W	Naval SNF canister	66" dia by 187" 66" dia by 201.5"	11	<1,000	As Packaged	11	Horizontal