**SANDIA REPORT**
SAND2013-5365
Unlimited Release
Printed July 2013

# High Temperature Storage Loop: Final Design Report

David D. Gill
William J. Kolb

Prepared by
Sandia National Laboratories
Albuquerque, New Mexico 87185 and Livermore, California 94550

Sandia National Laboratories is a multi-program laboratory managed and operated by Sandia Corporation, a wholly owned subsidiary of Lockheed Martin Corporation, for the U.S. Department of Energy's National Nuclear Security Administration under contract DE-AC04-94AL85000.

Approved for public release; further dissemination unlimited.

Sandia National Laboratories

Issued by Sandia National Laboratories, operated for the United States Department of Energy by Sandia Corporation.

**NOTICE:** This report was prepared as an account of work sponsored by an agency of the United States Government. Neither the United States Government, nor any agency thereof, nor any of their employees, nor any of their contractors, subcontractors, or their employees, make any warranty, express or implied, or assume any legal liability or responsibility for the accuracy, completeness, or usefulness of any information, apparatus, product, or process disclosed, or represent that its use would not infringe privately owned rights. Reference herein to any specific commercial product, process, or service by trade name, trademark, manufacturer, or otherwise, does not necessarily constitute or imply its endorsement, recommendation, or favoring by the United States Government, any agency thereof, or any of their contractors or subcontractors. The views and opinions expressed herein do not necessarily state or reflect those of the United States Government, any agency thereof, or any of their contractors.

Printed in the United States of America. This report has been reproduced directly from the best available copy.

Available to DOE and DOE contractors from
U.S. Department of Energy
Office of Scientific and Technical Information
P.O. Box 62
Oak Ridge, TN 37831

Telephone: (865) 576-8401
Facsimile: (865) 576-5728
E-Mail: reports@adonis.osti.gov
Online ordering: http://www.osti.gov/bridge

Available to the public from
U.S. Department of Commerce
National Technical Information Service
5285 Port Royal Rd.
Springfield, VA 22161

Telephone: (800) 553-6847
Facsimile: (703) 605-6900
E-Mail: orders@ntis.fedworld.gov
Online order: http://www.ntis.gov/help/ordermethods.asp?loc=7-4-0#online

SAND2013-5365
Unlimited Release
Printed July 2013

# High Temperature Storage Loop: Final Design Report

David D. Gill, William J. Kolb
Concentrated Solar Technologies
Sandia National Laboratories
P.O. Box 5800
Albuquerque, NM 87185-1127

**Abstract**

A three year plan for thermal energy storage (TES) research was created at Sandia National Laboratories in the spring of 2012. This plan included a strategic goal of providing test capability for Sandia and for the nation in which to evaluate high temperature storage (>650°C) technology. The plan was to scope, design, and build a flow loop that would be compatible with a multitude of high temperature heat transfer/storage fluids. The High Temperature Storage Loop (HTSL) would be reconfigurable so that it was useful for not only storage testing, but also for high temperature receiver testing and high efficiency power cycle testing as well. In that way, HTSL was part of a much larger strategy for Sandia to provide a research and testing platform that would be integral for the evaluation of individual technologies funded under the SunShot program. DOE's SunShot program seeks to reduce the price of solar technologies to 6¢/kWhr to be cost competitive with carbon-based fuels. The HTSL project sought to provide evaluation capability for these SunShot supported technologies. This report includes the scoping, design, and budgetary costing aspects of this effort

This page intentionally left blank.

# CONTENTS

1. Introduction ..... 7

2. Scoping and Motivation ..... 8
   2.1. Design Goals ..... 8
   2.2. Design Criteria and Target Values ..... 11

3. System Configurations ..... 12

4. Design ..... 15

5. Key Equipment Parameters ..... 18
   5.1. Tank ..... 18
   5.2. Pump ..... 18
   5.3. Piping ..... 19
   5.4. Heaters ..... 19
   5.5. Cooler ..... 20
   5.6. Heat Trace ..... 20
   5.7. Electrical Equipment ..... 20
   5.8. Insulation ..... 20
   5.9. Controls ..... 21

6. Budget ..... 21

7. Conclusions ..... 24

8. References ..... 25

Appendix ..... 26

# FIGURES

Figure 1. Some Potential Test Configurations of the High Temperature Storage Test Loop. ..... 13
Figure 2. More Potential Configurations of the High Temperature Storage Test Loop. ..... 14
Figure 3. The High Temperature Storage Loop Design in Isometric View. ..... 16
Figure 4. Right and Left Side Views of the HTSL System. ..... 17
Figure 5. Front and Back Views of the HTSL System. ..... 17
Figure 6. Rear Quarter Isometric and Top Views of HTSL System. ..... 18

# TABLES

Table 1. The design criteria with target values and a range of acceptable values. ..... 11
Table 2. Two representative salts showing the range of required flow and tank size for 700kW$_{th}$ and $\Delta T$=200K, 1 hr. storage. ..... 12
Table 3. Salt Properties from Literature for Candidate Thermal Storage Fluids. ..... 15
Table 4. Budgetary Equipment Cost for the High Temperature Storage Loop. ..... 22

This page intentionally left blank.

# 1. INTRODUCTION

A three year plan for thermal energy storage (TES) research was created at Sandia National Laboratories in the spring of 2012. This plan included a strategic goal of providing test capability for Sandia and for the nation in which to evaluate high temperature storage (>650°C) technology. The plan was to scope, design, and build a flow loop that would be compatible with a multitude of high temperature heat transfer/storage fluids. The High Temperature Storage Loop (HTSL) would be reconfigurable so that it was useful for not only storage testing, but also for high temperature receiver testing and high efficiency power cycle testing as well. In that way, HTSL was part of a much larger strategy for Sandia to provide a research and testing platform that would be integral for the evaluation of individual technologies funded under the SunShot program. DOE's SunShot program seeks to reduce the price of solar technologies to 6¢/kWhr to be cost competitive with carbon-based fuels. The HTSL project sought to provide evaluation capability for these SunShot supported technologies. This report includes the scoping, design, and budgetary costing aspects of this effort.

# 2. SCOPING AND MOTIVATION

The design choices of the high operating temperature storage experiment at Sandia have been motivated by several differing, but generally compatible goals. Each of these goals can bring different needs and requirements, so design tradeoffs have been made in some cases to accommodate as many needs and requirements as possible, while not jeopardizing the primary roles of this system in testing novel thermal high temperature storage fluids and components. This system represents the first step in the process of moving the Technology Readiness Level (TRL) of high temperature thermal energy storage from TRL 1&2 (basic and applied research) to 3 & 4 (proof of concept and validation of alpha prototype). The following discussion emphasizes the design requirements that would be necessary in order to meet each of the goals.

## 2.1. Design Goals

The primary goals (main numbered bullets) and the associated design requirements (lettered sub-bullets) are:

1. Provide a flow test capability for the evaluation of high temperature thermal energy storage (TES) heat transfer fluids (HTF). These fluids may be the product of development by SNL, NREL, the DOE HOT Fluid MURI, or industrial or academic development.
    a. Fluid Vessel and Fluid Mover - At a minimum, the system must have a fluid containment vessel and some method for moving the fluid, whether by displacer, natural convection, or pump.
    b. Uniform Flow - There must be some portion of the system which serves as piping in which a uniform flow field can be established. This would tend to favor a pump over natural convection loops or a displacer system unless the displacer is very large in comparison to the pipe diameter so full flow can be established.
    c. Fluid Changeout - The system should be able to be drained to allow the testing of multiple TES fluids/HTF's.
    d. Designs should consider a fluid with specific heat of 1.5kJ/kgK or higher.
    e. Thermal Cycling - Past requests from fluid researchers have indicated a desire to test the fluid with heat applied externally to the piping/tubing (simulating a tubular receiver) and then cooling the fluid back to a cold-storage temperature. This capability would require an external heater and cooler sufficient to take the full flow through the full temperature range. To do this economically would require the flow or the temperature range to be limited.
    f. Pressurized Vessel – one of the candidate salt fluids is the chloride salts. The literature on chloride salts is still being studied, but it appears that many potential chloride salts will require an overpressure of up to 1 atm. to prevent the creation of hydrochloric acid gas. Though many would suggest that based on past studies at lower temperature, the requirement for a pressurized tank is economically

infeasible for full-scale power production, the cost to add a pressurized tank in this small size range is not prohibitive and the capability would enable more comprehensive studies of HTF/TES fluids.

2. Provide a storage test bed for analyzing storage methodology at high temperature.
    a. Operating Temperature 250-800kC - To test fluids that meet the SunShot MURI guidelines, the system should be operable between 250-800°C.
    b. While it is not necessary for the whole system to be at the highest temperature, at least a portion of the system should have 800°C capability. If possible, a storage tank to test "hot tank" performance should operate at 700-750°C (assuming storage temp is ~50°C cooler than the film temperature which would have some margin below the maximum operating temperature of the fluid.
    c. Storage capacity – Though the testing of TES/HTF and material and component compatibility are the most important test capabilities of the flow loop (because they hold the greatest number of challenges), it would also be convenient if the flow loop were able to store thermal energy to demonstrate that capability. This would require an additional volume of salt and either a thermocline or a second storage tank. The amount of thermal energy storage does not need to be large, but should be enough to reasonably demonstrate storage capability with sufficient capacity to show steady state performance from storage as well as the transient conditions during charge and discharge. While demonstrating the ability to operate the power cycle while also charging storage would be more realistic, on a subscale demonstration system, this capability does not add a technically important mode of operation. A system that charges storage, and then discharges storage to run the power cycle fully demonstrates the ability of the HTF/TES fluid to perform the desired functions. The more complete demonstration can be left to a larger, more realistic scale system with little loss of effectiveness of the demonstration.
3. Provide a flowing test bed for compatibility testing these fluids with materials used in fluid containment, fluid control, and receivers.
    a. Removable Test Section - A portion of the system could be interchangeable to allow for testing of alternative materials or should contain an area for materials samples to be positioned in the flow
4. Provide a flowing test bed for performance analysis of storage components including piping, valves, flanges, instrumentation, and the associated equipment necessary for these components (e.g. packing, gaskets, and seals).
    a. Component Installation - A portion of the system should be replaceable with components that can be evaluated in the high temperature fluid.
    b. Fluid Volume - An attempt should be made to have sufficient extra fluid volume to fill reasonably sized test articles in addition to the flow loop.
5. Provide a HTF/heat addition capability for power cycle testing

a. Heater – The system could have a heater to supply an attached power cycle. Though this does not directly specify a power range or a specific amount of heat removal, there are several considerations for a system to be deployed at Sandia. The first is that the supercritical $CO_2$ system in Sandia's advanced nuclear group is designed for $700kW_{th}$ heat input. If this system were to be incorporated with the storage loop, then $700kW_{th}$ would be a good target.
b. Modularity – To meet the power cycle needs, it would be very convenient if the flow loop were modular and allowed sections or components to be easily added or removed. While a fluid test might need an externally heated tube and a cooler, a power cycle test would have no need of a cooler and would benefit from the ability to tie the power cycle test in at the location sometimes occupied by the cooler. There might even be different kinds of modules depending on the location of operation. For instance, a ground test of fluid might best be done with a propane heater to heat the exterior of the flow tube while a tower-top test might best use electrical immersion heaters to reduce operational risk on the tower. Modularity will be a key design characteristic of the system.
c. Skidded test – The test system should be skidded so that it can be transported to the location of the power cycle if that makes the most sense for testing.

6. Provide a HTF/heat removal capability for tower-top receiver testing
    a. Cooler – If the system is to be tested on tower top at Sandia's NSTTF, then the cooling needs would be up to $6.2MW_{th}$. However, the cost of a large cooler like that would be very high. Therefore, it would make more sense to size the receiver test to use a subset of the available heliostats and to be within the capability of the Tower Cooling Water/Glycol loop. This chiller system has a capacity of $1MW_{th}$, and it is likely that a test would have some water cooled panels as well as the receiver, so the available cooling when the storage test system was not available would be somewhat under 1MW.
    b. Modularity – Similarly to point 5b, modularity would allow a heater to be used in the fluid test loop when needed, or would allow the receiver to be used in place of the heater when receiver testing was the goal.
    c. Skidded test – The test loop should be relatively self-contained and skidded so that it can easily be loaded onto the NSTTF tower module and attached to receiver and or cooler skids for use at the top of the tower. The skidded nature will allow the most expedient and cost-effective testing to be done by allowing the skid to be placed in the most opportune location for a test.
    d. System Pressure – This scenario is expected to present the most significant pressure requirements because of the need to supply fluid to the top of a receiver (giving the highest static-head pressure) as well as the inclusion of the most aggressive heat exchanger which would have the most significant pressure losses.

## 2.2. Design Criteria and Target Values

Based on the above goals, a set of design targets has been selected. These design targets will continue to be evaluated and refined as the design process continues and more data is gathered, however, this gives a starting point for the design process and an explanation for why those values were selected. Table 1 shows the Design Criteria with target values. A discussion of the target value and the acceptable values is given for some of the criterion following the table.

**Table 1. The design criteria with target values and a range of acceptable values.**

| Design Criteria | Target Value(s) | Acceptable Value(s) |
|---|---|---|
| Temperature Range for Testing | 250°C – 750°C | 450°C-700°C |
| Thermal Input/output | 700kW$_{th}$ | 500kW$_{th}$ – 1MW$_{th}$ |
| System Flowrate | 6.2 kg/s (~50gpm) | 4.9-8.6kg/s (~40-70gpm) |
| Temperature Delta | 200°C | 100-300°C |
| Pump Pressure | 53m $H_2O$ (75psi) minimum | 53-88m $H_2O$ (75-125psi) |
| Piping | 1.5",high nickel alloy | 1.5-2" (2" nec. If flow>55gpm) |
| Storage Vessel(s) | 3.8 m$^3$ (1000gal)<br>Can be Pressurized to 1ATM | 2.7-7.6 m$^3$ (700-2000gal.) |
| Storage Vessel(s) | 1 tank w/ high temp capability | 1 hot & 1 cold tank |
| Gravity Drainback | Slope ¼" per foot | Slope 1/8" per foot |
| Skid Mounted | 1 skid for TES loop | Cooler or Receiver on separate skids |

System Flow Rate: A common rule of thumb for preventing pipe erosion is to keep the flow speed of the fluid less than 10ft/s. For 1.5" pipe, the maximum volumetric flow rate would be 55gpm and for 2" dia. Pipe, the maximum volumetric flow rate would be 97gpm. The pipe diameter will be further reviewed during the detailed design process to accommodate system effects such as preferential material transport, especially found in chloride applications, and also corrosion effects and barrier coating requirements.

The amount of heat that can be absorbed in the fluid depends on the fluid's specific heat, the desired temperature change, and the flow rate of the fluid. The decision of the design temperature difference between hot and cold is a bit nebulous for a fluid test loop, but some idea of desirable temperature ranges can be found by studying potential power cycles. The supercritical $CO_2$ cycle promises high efficiency and small turbine equipment. Like many cycles, the temperature range of the cycle can be selected to meet various requirements and desires. The Sandia 700kW split flow, simple cycle with recuperation, sCO2 test loop takes heat from a heat source over a 150°C range from 450-600°C with the remainder of the cycle's heat being supplied by recuperation. However, the Pratt & Whitney Rocketdyne [Johnson] cascaded concept utilizes a s$CO_2$ loop operating between 566 and 409°C and a secondary loop operating between 409°C and 288°C giving a temperature delta of 288°C. Also considering the supercritical steam cycle, Kolb 2011 reports the supercritical steam cycle operating between 301-591°C and the ultrasupercritical operating between 331-631°C with either case giving a temperature delta of approximately 300°C. From these possibilities, it seems reasonable to select

a minimum cycle temperature difference of $\Delta T=200°C$. The potential salts for use in this temperature range have a variety of specific heat values depending on composition. An important metric is the volumetric specific heat represented as density ($\rho$) multiplied by the specific heat ($C_p$) having the units of $kJ/m^3K$. A literature survey of 5 HTF salts showed a representative range of volumetric specific heat to be between $1417kJ/m^3K$ (LiCl-KCl eutectic) to $4151kJ/m^3K$ ($K_2LiNa_2CO_3$ eutectic). Using this range of material values and assuming a $700kW_{th}$ heat input over the 200K temperature range identified above would require flow rates between 39.1 to 13.4gpm. The values from the extremes are shown in Table 2. NOTE that the salts shown in the Table are representative only and are not the only salts that could be utilized in the system.

**Table 2. Two representative salts showing the range of required flow and tank size for $700kW_{th}$ and $\Delta T=200K$, 1 hr. storage.**

| Salt | $\rho$ Cp($kJ/m^3K$) | Req. Flow to absorb $700kW_{th}$ $\Delta T=200K$ (gpm) | Req. Tank for 1 hr storage (gallons) |
|---|---|---|---|
| LiCl-KCl eutectic | 1417 | 39.1 | 2346 |
| $K_2LiNa_2CO_3$ eutectic | 4151 | 13.4 | 804 |

The above analysis indicates that a pump with flow capabilities of around 50gpm would be sufficient, which would allow the system to operate with 1.5" dia. piping. Also, a tank with capacity of 1000-2000 gallons would probably best meet the needs of a broad range of testing conditions.

Pressure – the system pressure will need to overcome piping loss through the system as well as meet the head requirements of any receiver tests. Friction/restriction loss through a heater, cooler, valves, and piping is expected to be less than 50psi especially at these flow velocities. Assuming that static head required for a whole test setup including receiver was 9m, and using the higher density fluid of $1950kg/m^3$ the static pressure would be 172.2kPa or approximately 25psi. Therefore, a system capability for 75psi would be the minimum desirable and some extra pressure capacity would be useful for testing high pressure-drop heat exchanger designs.

## 3. SYSTEM CONFIGURATIONS

Below are some potential system configurations that could be utilized. The final configuration will depend on the component cost for the system and also the most immediate needs for the system test. Also, though solar receiver and power cycle are shown, they would not be part of the initial construction, but show the ability of the system to be used in the testing and validation of other subsystems. Note that this is not an exhaustive display of examples. In each system, the heater and a receiver could be interchanged. In each system, the cooler and power cycle could be interchanged. And, in any system the number of tanks and the configuration could be adapted to meet the final testing and cost targets. Figures 1 and 2 show many of the potential system configurations.

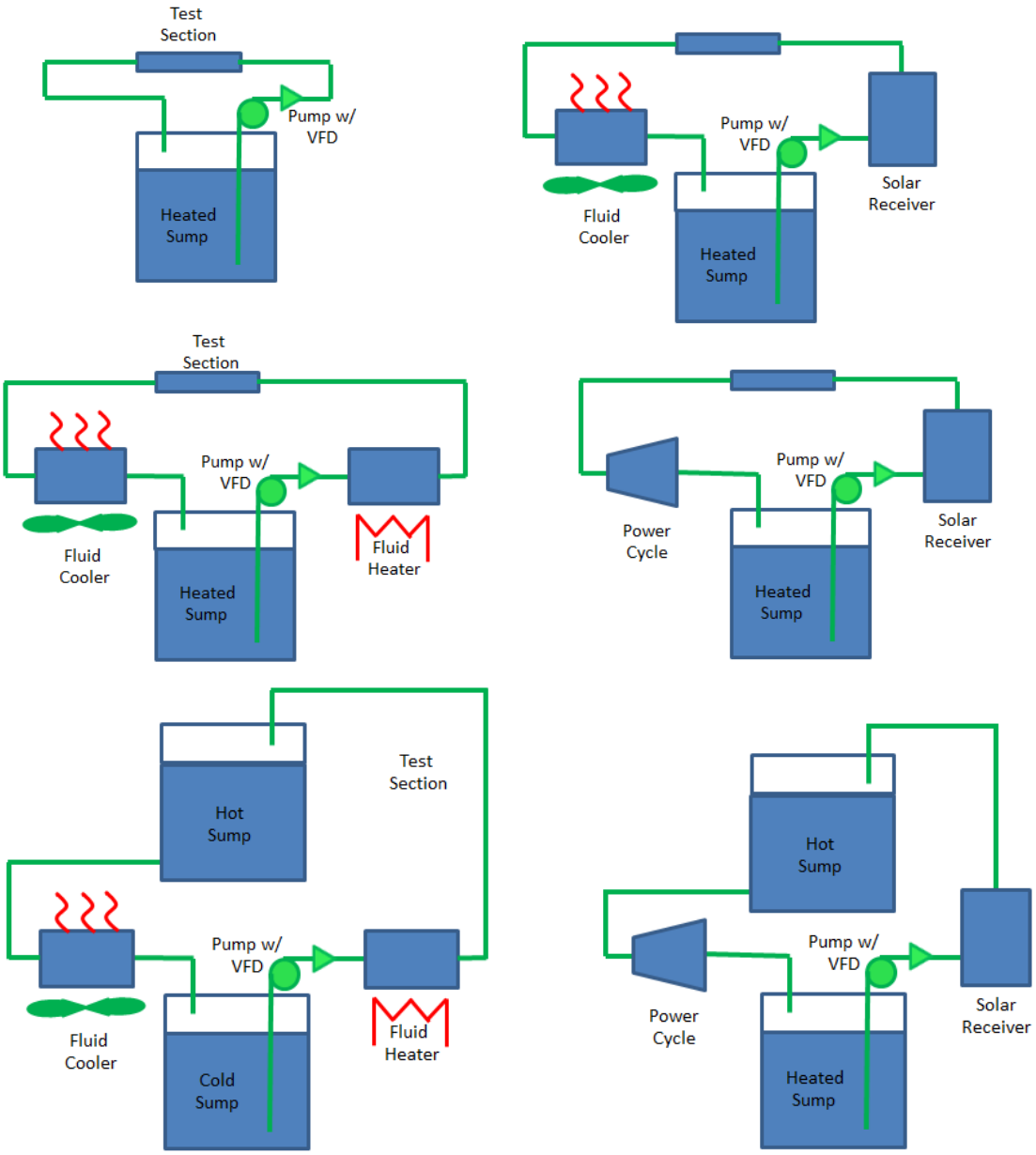


**Figure 1. Some Potential Test Configurations of the High Temperature Storage Test Loop.**

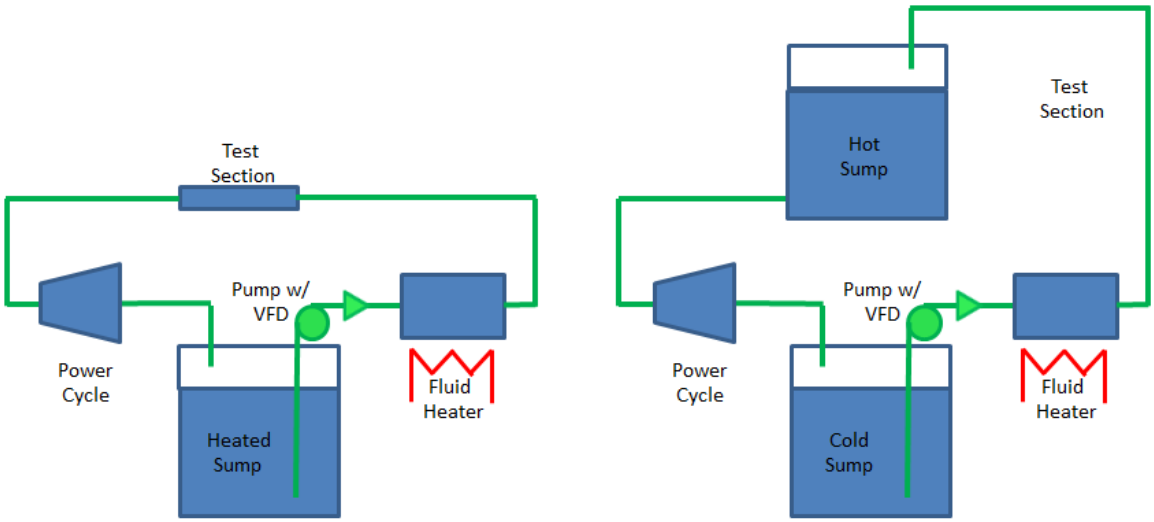


**Figure 2. More Potential Configurations of the High Temperature Storage Test Loop.**

# 4. DESIGN

A detailed design requires a better understanding of potential heat transfer fluids for the system, so a literature review was pursued to determine appropriate values for likely salt candidates. The six likely salt candidates have been identified primarily by melting point. In pursuing the property information [1-7], some disagreement was found between sources, but because property measurement was outside the scope of this project, the discrepancies were not resolved. When differences were encountered, the values from [2-5] were used for consistency in calculation method, but these values are not necessarily more accurate than the other references which may be measured data rather than calculated data. Table 3 shows the properties that were available for the different salt combinations with some calculated data in the table for unit conversions that were needed for other portions of the design.

**Table 3. Salt Properties from Literature for Candidate Thermal Storage Fluids.**

| | **LiCl-KCl** | **LiCl-NaCl-KCl** | **$Li_2CO_3$-$Na_2CO_3$-$K_2CO_3$** | **KCl-$MgCl_2$-NaCl** | **KCl-$MgCl_2$** | **LiCl-KCl-$CaCl_2$** |
|---|---|---|---|---|---|---|
| **Composition** | 58.5m%LiCl | 53.5%LiCl, 8.5%NaCl, 38%KCl | 43.5%Li-31.5%Na-25%K | 21.6%K-33%Na-35.4%Mg | 36%Mg-64%K | 50.5%LiCl, 11.5%KCl, 36.1%CaCl |
| **Mol mass (g/mol)** | 55.737 | 55.9756 | 100.0824 | 69.0923 | 81.9876 | 70.0446 |
| **Melt Point(°C)** | 348°C | 346°C | 393°C | 396°C | 430°C | 338°C |
| **Density g/cm3(720°C)** | 1.646 | - | 2.1211 | - | 1.530[@760C] | - |
| **Density (kg/m3)** | 1646 | - | 2121.1 | - | 1530 | - |
| **Specific Heat liq. (cal/mol K)** | 17.3 | - | 40.33 | 19.2 | 19.9 | - |
| **Specific Heat liq. (kJ/kgK)** | 1.2995 | - | 1.6871 | 1.1635 | 1.0162 | - |
| **Janz Vol 2 page** | 224 | 332 | 343 | - | - | 329 |
| **Janz Vol 4 page** | - | - | - | 371 | 328 | - |

Based on the design criteria determined in the scoping period of the project, a design was completed for the HTSL. This design seeks to be modular so that the system is adaptable to many of the configurations identified in the scoping activities. The design was then modified as necessary as costs were addressed and as the actual scale of different components was determined. An isometric view of the design is shown in Figure 3.

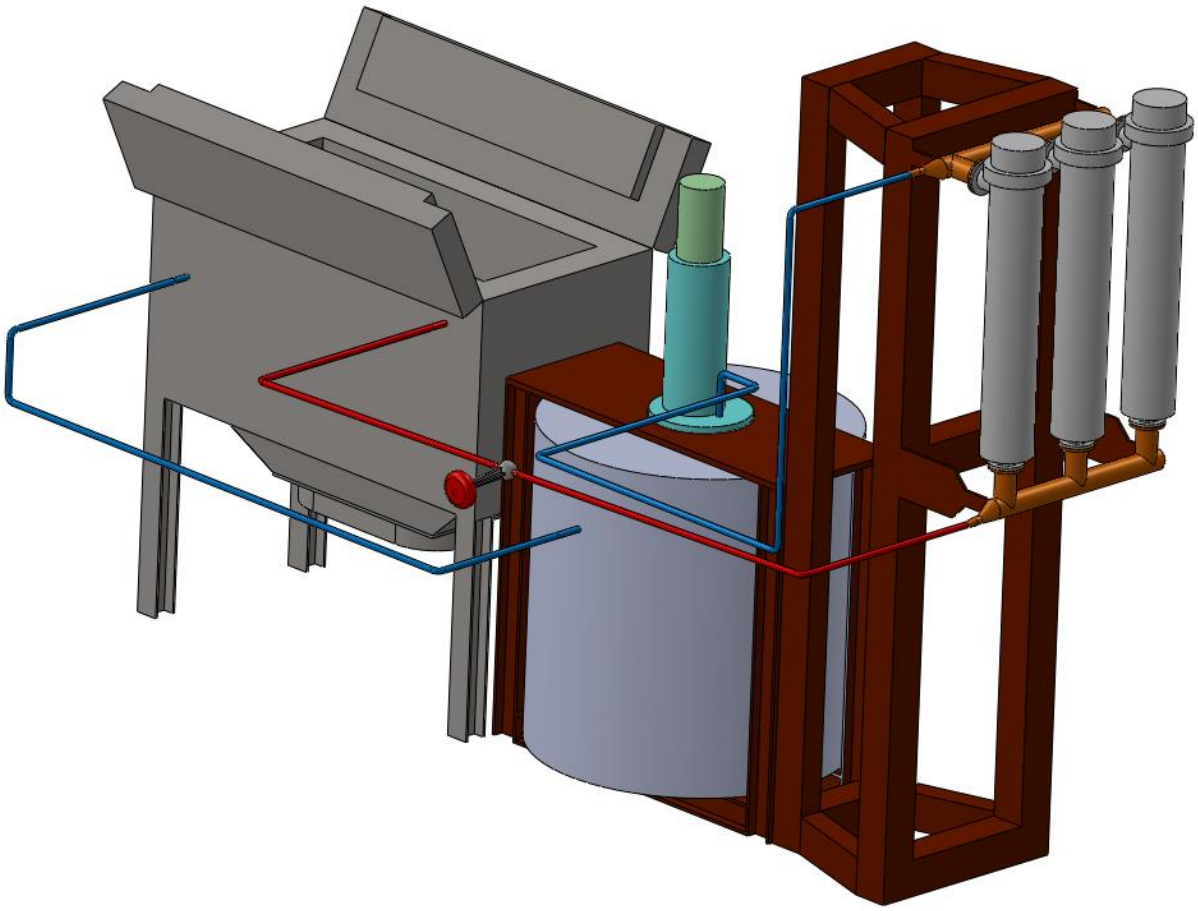

**Figure 3. The High Temperature Storage Loop Design in Isometric View.**

The Figure shows many of the aspects of the High Temperature Storage Loop and the way that they meet the design goals determined in the scoping phase of the project. The system has a $3.8m^3$ (1000 gallon) tank topped with an 8.6kg/s (~70gpm) pump. Haynes 230 piping connects this pump to the electric heaters which have the ability to add $600kW_{th}$ to the heat transfer fluid. The electric heaters are mounted on a tower that serves the functions of providing altitude for automatic drainback to the tank, but more importantly, a potential support structure for a receiver tower top test. The heaters and their feed/return manifolds can be removed from the tower and replaced with a receiver for on-sun testing. The heated salt then flows through a pressure control valve to the air/HTF cooler. The pressure control valve sets the pressure of the system while the pump speed is used to adjust flowrate. The cooler has insulating doors to prevent excessive thermal loss when there is no heat being added to the system and uses ambient air blown past serpentine tubes containing the flowing HTF. The tank, positioned at the rear of the test unit and out of the path of concentrated sunlight can be replaced with a power cycle for testing of novel high efficiency power cycle designs. After the cooler/power cycle, the HTF flows back to the tank for storage. Everything in the system is positioned so that the HTF will drain back to the tank when pumping stops. Not shown in the Figure is a vent line that runs from the tank ullage to the top of the heater unit to prevent vacuum when draining back. Figure 4, Figure 5, and

Figure 6 show different views of the system.  Note that all of the piping is shown without insulation for clarity.

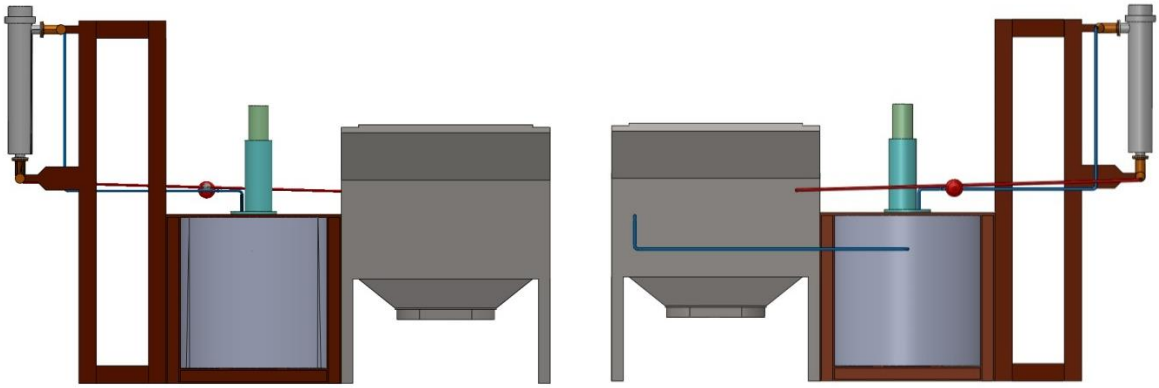

**Figure 4.  Right and Left Side Views of the HTSL System.**

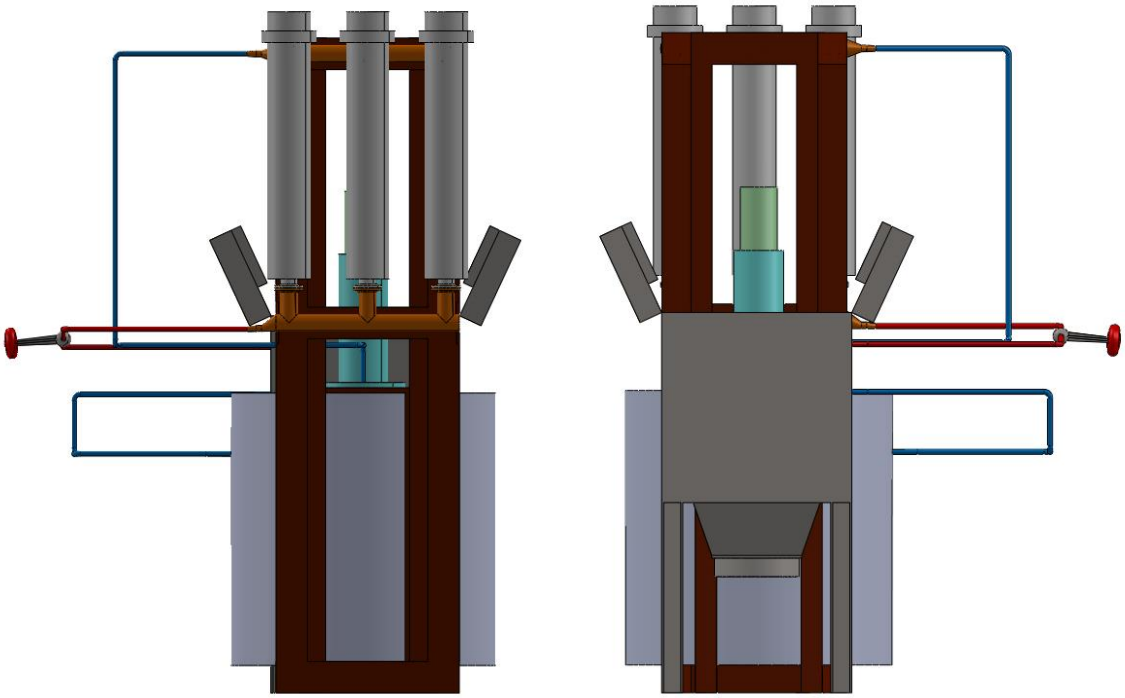

**Figure 5.  Front and Back Views of the HTSL System.**

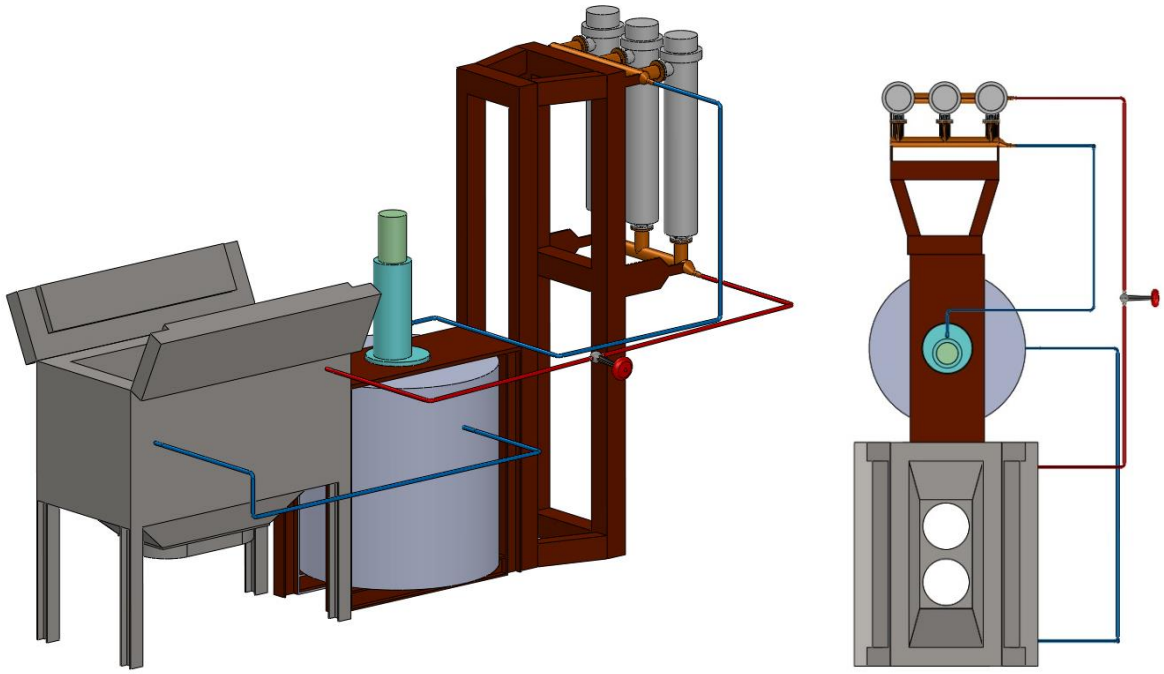

**Figure 6. Rear Quarter Isometric and Top Views of HTSL System.**

# 5. KEY EQUIPMENT PARAMETERS

Some of the key design parameters for each of the major HTSL components are noteworthy for more detailed discussion. Many of these parameters show the system's ability to meet the desired criteria of Table 1. These descriptions are not meant to be comprehensive, but instead show the most important aspects of the design.

## 5.1. Tank

The tank has a Haynes 230 inner liner surrounded by insulating firebricks that both support and insulate the tank and its fluid contents and then an outer shell of 304 stainless steel. The tank is designed for a 1atm. overpressure capability and is heated by cal rods affixed to the outside of the liner. The inner liner is connected to the outer shell by a bellows that allows for differential thermal expansion between the hot inner liner and the ambient shell. The insulating firebrick selected has a very low thermal conductivity which comes at the expense of compressive "crush" strength. However, because the tanks inner liner is not very thick, and because the tank height is not so large, the insulating firebricks have ample strength to handle the load.

## 5.2. Pump

The pump quoted is a Lawrence Pump 1.5x2x12 producing 6.8kg/s (70gpm) with a head of about 45m (150ft). The pump is a cantilevered pump so that no bearings are required to be

submerged in the hot salt. The pump material for this quote was primarily Inconel 600, though the material might need to be changed depending on the final choices of heat transfer/storage fluid and the results of materials compatibility testing in those fluids. Important consideration for a pump of this type is that the lead time for the pump is quoted at 42-46 weeks and a refined pump quote would require another 3 weeks prior to ordering. As experienced with the construction of the 585°C Molten Salt Test Loop at MSTL, the price and delivery of molten salt pumps are a significant hindrance to the development and fabrication of both test loops like the one proposed here and also of full size storage systems to be installed in power production plants.

## 5.3. Piping

The piping for the system was chosen based on its ability to contain the pressures and flowrates at the temperature of operation. The pipe is Haynes 230 which has shown reasonable resistance to corrosion in chloride salts and should exhibit good characteristics in carbonate salts as well, though the testing in carbonates is sparse. The pipe is schedule 40 which will withstand the pressure at the design temperature for the loop. Additionally, the pipe is 1-1/2" nominal diameter pipe, chosen because of the desire to keep flowrates below 10ft/s to prevent erosion. Because the pipe is relatively thin wall (schedule 40) and of relatively small diameter, the expansion loops can be much smaller without generating excessive stress at the elbows upon heating and subsequent pipe expansion. Also, because the cost of these high-nickel alloys is so significant, it is important to take every opportunity to reduce the amount of material required. In high-nickel pipe, much of the pipe is only available in welded form because of nickel's tendency to work harden. For this loop, the pipe selected is welded seam pipe with a class III rating which defines the cold work required on the weld. Class III pipe is "fully cold reduced" and is the suggested material for highly corrosive materials. If the loop were only going to operate with carbonate salts, it would probably be fine to utilize "cold-bead worked, fully solution annealed". For the pipe fittings, H230 fittings were not available, so Hastelloy B2 was selected because of its resistance to chloride-containing materials specifically. Like the pipe, the fittings are 1-1/2" schedule 40 and are butt-welded.

## 5.4. Heaters

The heaters are an upgraded stock item from Watlow. These heaters have Incoloy sheath tubular heating elements are are flange type heaters. The heaters are rated at 200kW each, but could be supplied with 230kW heating capacity which would then require only 3 heaters to achieve the target goal of 700kW. This goal was derived from the required heat input to operate the supercritical $CO_2$ turbine loop that exists in the Advanced Nuclear Concepts group at Sandia National Laboratories. Some challenges that would have to be addressed include the flanges on these heaters which are typically standard 150 lb. pipe flanges. Because of the thermal cycling that is typical of a test rig like this one and because of the different operational temperature, the system would be likely to exhibit significant stretching of the flange bolts which then leads to leakage when at a cooler temperature. If one can keep the thermal cycling to a minimum, this challenge can be addressed with hot torqueing of the bolts followed by somewhat frequent replacement of the bolts to prevent failure. Even with this methodology to bolt tightening, there is still a concern about the available gasket types and their compatibility with high temperature

heat transfer fluids. To date, no good options have been found for this gasket material. Another method of addressing the flanges would try different high temperature flanges. These have seen some success at lower temperature and might operate well at high temperature as well. A third option is to back weld the flange which makes maintenance much harder, but hopefully also less necessary. In any case, this is an unresolved issue that must be addressed. The heaters are attached to Hastelloy B2 headers which are primarily composed of 6" tees with intermediate short spool pieces to achieve appropriate spacing between the heaters for insulation. The heaters hang from the top heater header and the bottom header is free to expand vertically with thermal growth. It is hoped that the same stand that holds the heaters could be used for receiver testing. It would require the addition of some insulation board and foil shielding from stray and reflected flux but supplies a strong base onto which a receiver test could be attached.

## 5.5. Cooler

The cooler is of a design similar to the one installed at Sandia's 565°C Molten Salt Test Loop. The cooler has two fans driven by variable frequency drives, two sets of dampers/louvers that are used to control air flow from natural convection, heating rods to maintain the internal box temperature and to preheat the air at lower temperature cooling conditions, and a set of large insulated doors to keep the heat in the device when the salt is not flowing or does not require any cooling. As with anything in a molten high temperature storage system, the primary challenge is to keep the fluids molten and moving. Coolers are no exception and spend all non-operating time as heaters to prevent freeze-up on the inside of the finned tubes. The cooler is positioned fairly high off the ground to aid airflow to the fans and to allow for drainback to the tank when the system shuts down.

## 5.6. Heat Trace

The proposed heat trace is similar to the heat trace used on Sandia's Molten Salt Test Loop. This heat trace uses Inconel 600 cable and has sufficient temperature range to allow utilization at these higher temperatures. Because of the high temperature, the heat trace requires a conductor along the pipe and an additional but separate return conductor. For a relatively small system like this, and to reduce cost, the heat trace zones will be controlled by manually set local controllers.

## 5.7. Electrical Equipment

The electrical equipment quoted for this test loop includes a transformer and switch, motor control center including main circuit breaker and appropriately-sized motor starter. Also included are a Variable Frequency Drive for the pump, a Uninterruptible Power Supply, a main disconnect and electrical panels with breakers.

## 5.8. Insulation

The insulation quoted for this project is high temperature insulation with a stainless steel jacket. This configuration is very similar to that used at Sandia's Molten Salt Test Loop. The insulation would not necessarily provide a hand-safe surface, but would instead be sized to prevent excessive heat loss outside of the system's capability to replenish.

## 5.9. Controls

The system is quoted with a National Instruments Compact RIO controller, extension chassis, and modules for thermocouples, digital inputs and outputs, and analog inputs and outputs (4-20mA). The CompactRIO is a very strategic control system because it functions with the control logic residing on the CompactRIO. Therefore, the programming of the system can be done in a user-friendly windows environment using LabVIEW software, but once downloaded, the system runs in a robust manner independently from the computer. If the computer crashes or is taken off line for some reason, the control system will continue to operate in a safe, orderly manner. The system was also quoted with a laptop for system control. The laptop is useful because of the modular, portable nature of the design. Because this test loop might operate on top of the solar tower, or at the Advanced Nuclear Concept Group's supercritical $CO_2$ facility, or even somewhere at the National Solar Test Facility, the portability of the laptop is a good choice. Additionally, the laptop has inherent backup power because of its battery.

# 6. BUDGET

The following is understood to be a high-level budgetary planning tool. It includes major components and parts only. Because of the high-level nature of the budget, the quotes were obtained from vendors who likely did not do extensive planning and design. In some cases, quotes were adapted from other projects that are ongoing. Finally, some quotes were not available in time and so estimates were made using lower temperature materials and extrapolating costs. Therefore, the cost here should only be considered budgetary and it would be important to include a reasonably high contingency budget to proceed with this project. Also missing from this budget are labor hours for assembly, welding, wiring, programming, and even final detailed design. These costs would vary greatly depending on the people doing the work and their experience as well as the location of the work. Because this is a portable system, it could easily be built at some company's fabrication site and shipped to the final place of usage. The high-level budget is included in Table 4. Some supporting design notes are provided in the appendices.

## Table 4. Budgetary Equipment Cost for the High Temperature Storage Loop.

| Item | Spec | Vendor | Cost ($k) | Comment |
|---|---|---|---|---|
| Pump | 6.2 kg/s (~50gpm)<br>250°C – 750°C<br>53m $H_2O$ (75psi) minimum<br>Appropriate material construction<br>Cantlever Design | Lawrence Pump | $425.00 | Long Lead 42 to 46 weeks and +/- 25 % |
| Cooler | 700kW$_{th}$<br>250°C – 750°C<br>53m $H_2O$ (75psi) minimum<br>Appropriate material construction | Hoffman<br>Sid Lauther and<br>Rudy Plese | $265.00 | |
| Heater | 700kW$_{th}$<br>250°C – 750°C<br>53m $H_2O$ (75psi) minimum<br>Appropriate material construction | Watlow heater<br>Cybernetics Inc.<br>11024 Mont NE<br>856-1500 - Bill | $36 K each<br>$108.00 | Propane/Gas<br>Electric heat trace<br>Electric immersion |
| Tank | Up to 750°C, 1 Atm Pressure<br>Haynes 230 Liner, 0.25" plate<br>Steel Shell<br>Fabrication<br>Bellows for tank to tank<br>Insulating Fire Brick K23, qty 1515 | Tank Subtotal | <br>$148.80<br>$28.37<br>$200.00<br>$150.00<br>$4.54<br>$531.71 | <br>per pound price<br>$28,367 for materials |
| Piping<br><br><br><br>Test Section, HtrHdr | 100 feet - 1.5", Haynes 230, Sch 40, welded<br>1-1/2" long rad. Elbows, sch 40, qty 10<br>6" Tee, sch 40, Haynes 230, qty 6<br>6"x2" reduc, 2"x1-1/2"red qty 2<br>6" pipe, sch40, H230, 15ft | Haynes Int'l<br><br><br><br>Pipe Subtotal | $35.30<br>$1.52<br>$10.34<br>$3.32<br><br>$50.48 | ss316 * 10<br>ss316 * 10<br>ss316 * 10<br>ss316 * 10 |
| Valve | 1.5",high nickel alloy | Flowserve<br>Used MSTL plus 20% | $40.00 | |
| Insulation | Up to 750°C | Merit Insulation<br>Darel | $41.80 | |
| | | Mech. Sub Total - ($k) | $1,461.99 | |

| | | | | |
|---|---|---|---|---|
| Heat Trace | Inconel cable | Tyco | $10.00 | $20/foot Cable Only - 4 stands |
| VFD | Rated 480 VAC 100 HP | Allen-Bradley PowerFlex 700 w/HIM and braking | $12.00 | |
| Transformer | Rated 4160 to 480 VAC | Best Value SNL Contract | $25.00 | |
| HV Switch | 15 KV Class PMH 5 | S&C - PMS-5 | $15.00 | |
| Panels | Rated 480 VAC 225 amp 42 Circuit Main | Siemens P2 Panel w/ 65Kva and 42 1 pole 20amp breakers | $10.00 | |
| MCC | Rated 480 VAC 1000 Amp Main - Three bays | Rockwell Automation | $22.00 | |
| UPS | Rated 480 VAC to 120 V 50 KVA | Rockwell bulletin 1609 | $6.00 | |
| Disconnects | Rated 480 VAC 100 HP | Siemens HF365N | $3.60 | |
| Misc Parts | Wire, Conduit, etc | 5 % of price | $10.00 | |
| | | **Elect. Sub Total - ($k)** | **$113.60** | |
| Control | TC - Assume 50 each | Vendor Data Omega | $2.50 | |
| | NI Hardware | Vendor Data | $14.08 | |
| | Flow Meters | | $33.00 | |
| | PT | | $15.00 | |
| | Level Sensor | | $10.00 | |
| | | **Contrl. Sub Total - ($k)** | **$74.58** | |
| | Frame and Skids | JIT Verbal Quote | $2.77 | |
| | | **Struct. Sub Total - ($k)** | **$2.77** | |
| | | **Equipment Total - ($k) =** | **$1,652.94** | |

# 7. CONCLUSIONS

The scoping and design of a very useful research and test capability has been completed. The system appears to be feasible, though further detailed engineering would be required to address some of the remaining challenges. During the design process, it was found that while the system can be designed for multiple heat transfer materials, as was done here, the design would certainly be less costly if designed for one material. For instance, if designed for carbonate salts, the material requirements would be less severe, the corrosion rates would be smaller, and the tank would be smaller because of the higher density and higher specific heat capacity. However, the ability to try different heat transfer materials is a valuable capability and probably significantly less than building an additional test loop for each new material of study.

The design was completed with a modular emphasis that would allow the system to be taken apart for testing in different configurations or in different locations. This aspect of the design is very important for making the loop useful across the broadest application space. This capability is expected to be critical if the DOE is to properly evaluate the individual subsystems and components that have been funded under the SunShot program.

# 8. REFERENCES


1. Janz, G.J., *Molten Salts Handbook*. 1 ed1967, Troy, NY: Academic Press. 588.
2. Janz, G.J., et al., *Physical Properties Data Compilations Relevant To Energy Storage - 2. Molten salts: Data on Single and Multi-Component Salt Systems*, in *National Bureau of Standards, National Standard Reference Data Series*1979.
3. Janz, G.J., et al., *Physical Properties Data Compilations Relevant to Energy Storage, I. Molten Salts: Eutectic Data*, in *National Bureau of Standards, National Standard Reference Data Series*1978, NSRD.
4. Janz, G.J., et al., *Molten Salts -- Volume 1, Electrical Conductance, Density, and Viscosity Data*, in *National Bureau of Standards, National Standard Reference Data Series*1968, National Bureau of Standards (NBS). p. 139.
5. Janz, G.J. and R.P.T. Tomkins, *Physical Properties Data Compilations Relevant To Energy Storage - 4. Molten salts: Data on Additional Single and Multi-Component Salt Systems*, in *National Bureau of Standards, National Standard Reference Data Series*1981.
6. Kenisarin, M. and K. Mahkamov, *Solar energy storage using phase change materials.* Renewable and Sustainable Energy Reviews, 2007. **11**(9): p. 1913-1965.
7. Kenisarin, M.M., *High-temperature phase change materials for thermal energy storage.* Renewable and Sustainable Energy Reviews, 2010. **14**(3): p. 955-970.

# APPENDIX

The following are some of the preliminary calculations done at a very high level for a rule-of-thumb analysis of the tank design. This has little detail and should be reviewed before proceeding with the design.

Previously when looking at the tank design, a vertical cylindrical tank might be:
The tank inner dims were 54" tall for the cylinder with 12" dome top and bottom.
So the maximum possible head on a point in the tank would be 78" or 1.9812m

Using the most dense salt, the carbonate salt
Rho=2.1211kg/m^3

Pressure = rho*g*h = 2121.1kg/m^3 * 9.81m/s^2 * 1.9812m = 41,225 kg/ms^2 = kg m / s^2 m^2 = N/m^2 = 41.225kPa

Or, let me look at this another way.
1000 gallons = 3.7854m^3
3.7854 * 2121.1 = 8029.2119 kg

So, a portion of the blocks under the tank would be holding up the weight of the tank, the fluid inside, and the bricks on top of the tank. How much does this all weigh?

The tank is 23,285 in^2 surface area (outside) which is 23285 / 1550 = 15.0226 m^2
The mass is 1876 lbs for a 1/4" wall = 851 kg

Or 3703 lbs for a 1/2" wall thickness = 1679 kg

I saw a quote online from 2008 for sheet at 0.020". It was $39.50/lb which would make the 1/4" wall tank be $74,000 on a per lb basis for the Haynes alone - wow.

At 0.020" wall thickness, the mass is 152

Talked to Alan and the corrosion of Chloride salts is crazy (like 1/4-1/2" per year) but there is no data on H230 and they didn't do a good job of controlling salt chemistry and purity. Anyway, carbonates should be better. I will make rash assumptions that carbonates in H230 are like nitrates in SS347 and use Bob's numbers that he gave Greg.

10-20mils per 10 years
An Evaluation of Possible Next-Generation High-Temperature Molten-Salt Power Towers
SAND2011-9320
If this is true, we better not use 0.020" thick material!
So the 0.15"-0.25" material is much more reasonable

_____
Choosing JM23, The weight of the bricks is:
Density (ambient) = 480kg/m^3
Bricks are 230x114x65mm (9" x 4.5" x 2.5") V = 0.230 * 0.114 * 0.065 = 0.0017 m^3
Mass = 0.0017 * 480 = 0.816 kg per brick

_____
The thermal loss of the bricks - using 800C with k=0.17W/mK
Q = -k A dT/L
For the first pass, assume that I can have a thermal loss of 40kW from the furnace
Assume dT = 800C - 0C = 800K
A = 15.0226m from above
L = -k A dT/Q

L = 0.17 * 15.0226 * 800 / 40000 = 0.0511
Or, if the bricks are used lengthwise
Q = 0.17 * 15.0226 * 800 / .230 = 8,882.9287 or 9kW
Now, of course there are many more significant sources of heat loss from all the flanges, gaps etc.

If the diameter of the tank is 75", the area of the tank top is 3.14159 * 37.5 * 37.5 = 4,417.86094 / 1550 = 2.85023 m^2
Assuming that we use the bricks in the medium direction this would be 480 * 2.85023 * .114 = 155.96459 kg per layer
The bricks are 0.114 * 0.230 = 0.0262 m^2 per brick
This makes a layer be approximately 2.85023 / 0.0262 = 108.7874 bricks per layer on top and bottom

Therefore, at 2 layers deep, the top and bottom require 110 * 4 = 440 bricks and a weight of 156 * 2 = 312 kg on top
The surface area of the outside is pi D h = 3.14159 * 75 * (54 + 12 + 12 + 9) = 20,498.87475 / 1550 = 13.22508 m^2
The surface area of the second layer for the 2nd brick layer is 3.14159 * (75 + 9) * (54 + 12 + 12 + 9) = 22,958.73972 /1550 = 14.81209 m^2
So the first layer requires 13.22508 / 0.0262 = 504.77405 = 510 bricks
And the second layer req. 14.81209 / 0.0262 = 565.34695 =565 bricks
The total number of bricks is 510 + 565 + 440 = 1,515 bricks

Sent a request to Thermal ceramics for this number.
Now, the inside tank has at leas 312 kg of bricks on top of the tank - can it handle that?
And, the bricks under the floor of the tank have:

312 kg-bricks + 851kg-tank + 8030kg-salt = 312 + 851 + 8030 = 9193 * 9.81 = 90183.33 /2.85023 = 31640.72022 31.64kPa pressure and the Cold Crush Strength of the bricks is 1.2 Mpa so we have a 1200/31.64 = 37.9267 safety factor for pump weight and steel and other stuff.
Just to check, the pressure under the brick wall is rho*g*h where h= 54 + 12 + 12+ 9 + 4.5 = 91.5 * 0.0254 = 2.3241 m

480 * 9.81 * 2.3241 = 10,943.7221 kg/m^3 * 9.81m/s^2 * m = kg/m s^2 = kg m/ m^2 s^2 = N/m^2 = Pa
10.9kPa which is way less than the 1.2MPa that is the cold crush strength of the bricks

# DISTRIBUTION

| | | | |
|---|---|---|---|
| 1 | MS 1127 | David Gill | 06123 (electronic copy) |
| 1 | MS 1127 | William Kolb | 06123 (electronic copy) |
| 1 | MS0899 | Technical Library | 9536 (electronic copy) |

Sandia National Laboratories