SANDIA REPORT

SAND2012-0105
Unclassified Unlimited Release
Printed January 2012

PVT-NG Sensor Final Report

Dean J. Mitchell and Charles Brusseau

Prepared by
Sandia National Laboratories
Albuquerque, New Mexico 87185

Sandia National Laboratories is a multi-program laboratory managed and operated by Sandia Corporation, a wholly owned Lockheed Martin Corporation, for the United States Department of Energy's National Nuclear Security Administration under Contract DE-AC04-94AL85000.

Approved for public release; further dissemination unlimited.

Sandia National Laboratories

Issued by Sandia National Laboratories, operated for the United States Department of Energy by Sandia Corporation.

NOTICE: This report was prepared as an account of work sponsored by an agency of the United States Government. Neither the United States Government, nor any agency thereof, nor any of their employees, nor any of their contractors, subcontractors, or their employees, make any warranty, express or implied, or assume any legal liability or responsibility for the accuracy, completeness, or usefulness of any information, apparatus, product, or process disclosed, or represent that its use would not infringe privately owned rights. Reference herein to any specific commercial product, process, or service by trade name, trademark, manufacturer, or otherwise, does not necessarily constitute or imply its endorsement, recommendation, or favoring by the United States Government, any agency thereof, or any of their contractors or subcontractors. The views and opinions expressed herein do not necessarily state or reflect those of the United States Government, any agency thereof, or any of their contractors.

SAND2012-0105
SANDIA REPORT
Unclassified Unlimited Release

Printed January 2012

PVT-NG Sensor Final Report

Dean J. Mitchell and Charles Brusseau
Contraband Detection Technology

Sandia National Laboratories
P.O. Box 5800
Albuquerque, New Mexico 87185-0782

Abstract

This document is a final report for the polyvinyl toluene (PVT) neutron-gamma (PVT-NG) project, which was sponsored by the Domestic Nuclear Detection Office (DNDO). The PVT-NG sensor uses PVT detectors for both gamma and neutron detection. The sensor exhibits excellent spectral resolution and gain stabilization, which are features that are beneficial for detection of both gamma-ray and neutron sources. In fact, the ability to perform isotope identification based on spectra that were measured by the PVT-NG sensor was demonstrated. As described in a previous report, the neutron sensitivity of the first version of the prototype was about 25% less than the DNDO requirement of 2.5 cps/ng for bare Cf-252. This document describes design modifications that were expected to improve the neutron sensitivity by about 50% relative to the PVT-NG prototype. However, the project was terminated before execution of the design modifications after portal vendors demonstrated other technologies that enable neutron detection without the use of He-3. Nevertheless, the PVT-NG sensor development demonstrated several performance goals that may be useful in future portal designs.

Acknowledgement

The authors gratefully acknowledge support provided by the Department of Homeland Security (DHS) Domestic Nuclear Detection Office (DNDO), under contract DE-AC04-94AL85000. The voxelSPEC development was supported in part by the U.S. Defense Threat Reduction Agency (DTRA), under contract HDTRA1-09-C-0012.

Contents

Nomenclature 6
1 Introduction 7
2 Sensor Design Modifications 7
2.1 Additional Moderator 7
2.2 Improved Neutron Capture on Front of Detector 9
2.3 Coincidence Summing Both PVT Detectors 12
3 Conclusions 13
References 13
Distribution 14

Figures

Figure 1. Cross-sectional view of the PVT-NG detector. The front of the detector is at the top of this drawing. 8
Figure 2. Front view of the PVT-NG detector 8
Figure 3. Relative increase in the neutron capture rate versus thickness of polyethylene placed behind the NEMA enclosure. 9
Figure 4. The spectrum recorded by a 2″×4″×16″ NaI detector while it was exposed to a 252Cf source. The three spectra represent neutron-to-gamma conversion produced by sheets of the following materials, which were placed in front of the detector: PVC (black); cadmium (red); gadolinium (green). 10
Figure 5. Design plan of the Version 2 of the PVT-NG sensor. 11
Figure 6. Design detail at the base of the PVT-NG sensor 12

Nomenclature

cps/ng	counts per second per nanogram
DNDO	Domestic Nuclear Detection Office
LED	light-emitting diodes
FLIR	FLIR Systems Inc.
MCA	multichannel analyzers
MCNP	Monte Carlo N-Particle Transport Code
NaI	sodium iodine
NEMA	National Electronics Manufacturers Association
NORM	naturally-occurring radioactive materials
PMT	photomultiplier
POP	Period of Performance
PVT	polyvinyl toluene
PVT-NG	polyvinyl toluene-neutron gamma
PVC	polyvinyl chloride
SNL	Sandia National Laboratories
voxelSPEC	Multichannel analyzer developed by FLIR

1 Introduction

This is a final report that describes the status of the polyvinyl toluene-neutron gamma (PVT-NG) sensor prior to termination of the project. Under sponsorship of the Domestic Nuclear Detection Office (DNDO), the PVT-NG sensor was developed to detect both neutron and gamma-ray sources using large polyvinyl toluene (PVT) detectors. The neutron sensitivity is obtained by surrounding the two PVT detectors that are contained within the unit with polyvinyl chloride, which emits high energy gamma rays following neutron absorption by chlorine. As described in Reference 1, fabrication of a prototype unit was completed in June 2011 and detailed performance data was collected and processed. The sensor was then shipped to the Nevada National Security Site (NNSS) for independent testing. It is difficult to make a one-for-one comparison because the open data set collected at NNSS were performed at a distance of 2.5 meters with an AmBe source, whereas characterization at Sandia was based on a distance of 2 meters using ^{252}Cf in bare and moderated configurations. Nevertheless, testing at NNSS essentially confirmed the neutron sensitivity that was measured at Sandia National Laboratories (SNL), where the sensor was developed.

The PVT-NG that was evaluated in the initial tests was the first unit of this type. The development time was very short, so it was not possible to complete all of the design objectives prior to shipment to NNSS. The neutron sensitivity was measured to be 1.9 cps/ng for bare ^{252}Cf at a distance of 2 meters, which did not quite meet the DNDO requirement of achieving 2.5 cps/ng under these conditions. The neutron sensitivity must be improved to meet the DNDO requirements, but the performance for gamma-ray detection was found to be exceptional. Spectra collected by the PVT-NG sensor exhibit resolution that is twice as good as fielded portals with PVT detectors, and the gamma-ray sensitivity is also better because elimination of the need for a dedicated neutron detector provides space for PVT panels. The improved resolution and efficiency contributed to the ability to perform isotope identification for weak gamma ray sources, which is another first for PVT detectors. Eliminating the need for a dedicated neutron detector could also reduce the cost relative to traditional portals.

The original Period-of-Performance (POP) for this project, which extended through 6/28/2011, provided sufficient time to modify the sensor to create a second version that incorporates all of the design elements that were not completed in the original version due to time constraints. SNL was in the process of planning design modifications when the project was terminated prematurely because several commercial suppliers demonstrated neutron detectors that met the DNDO neutron sensitivity requirements without using ^{3}He. This report describes the status of the design modification in progress when the project was terminated.

2 Sensor Design Modifications

Three sensor design modifications that would have been included in Version 2 of the PVT-NG sensor are described in this section.

2.1 Additional Moderator

The depth of the NEMA enclosure that houses the sensor elements did not provide sufficient space for inclusion of the desired amount of moderator. This limitation is clear from Figure 1, where it is apparent that almost all of the depth is occupied by the PVT detectors, the 1″-thick layer of PVC behind the detector, and space that is required for shock mounts. However, it was noted during a visit to NNSS that the face of the NEMA enclosure used with other portals is not recessed as far the PVT-NG sensor, which is shown in Figure 2. The coolers, which are the silver units at the top and bottom of the NEMA enclosure, were installed for temporary use during summer testing of the prototype unit in Nevada. The need for cooling would be reduced with the second generation voxelSPEC multichannel analyzers (MCA), which use only one-third the power of the MCAs in the prototype. Coolers were used in the prototype because temperature testing was not possible given the short development time, but they probably weren't necessary even for the prototype. After removing the coolers, there is ample setback to allow insertion of additional moderator behind the NEMA enclosure. Figure 3 compares the computed relative neutron capture rate as a function of thickness of polyethylene that is placed behind the NEMA

enclosure[1]. Our plan was to add 2″ of polyethylene behind the NEMA enclosure, which would improve the neutron sensitivity by 8% relative to the prototype.

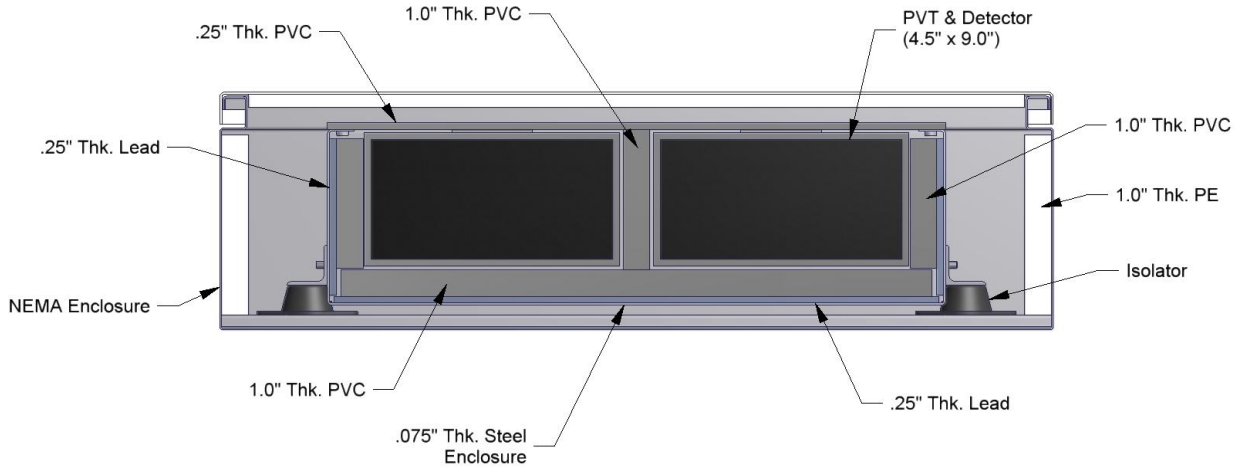

Figure 1. Cross-sectional view of the PVT-NG detector. The front of the detector is at the top of this drawing.

Figure 2. Front view of the PVT-NG detector

[1] The calculations were performed with the Monte Carlo transport code MCNP.

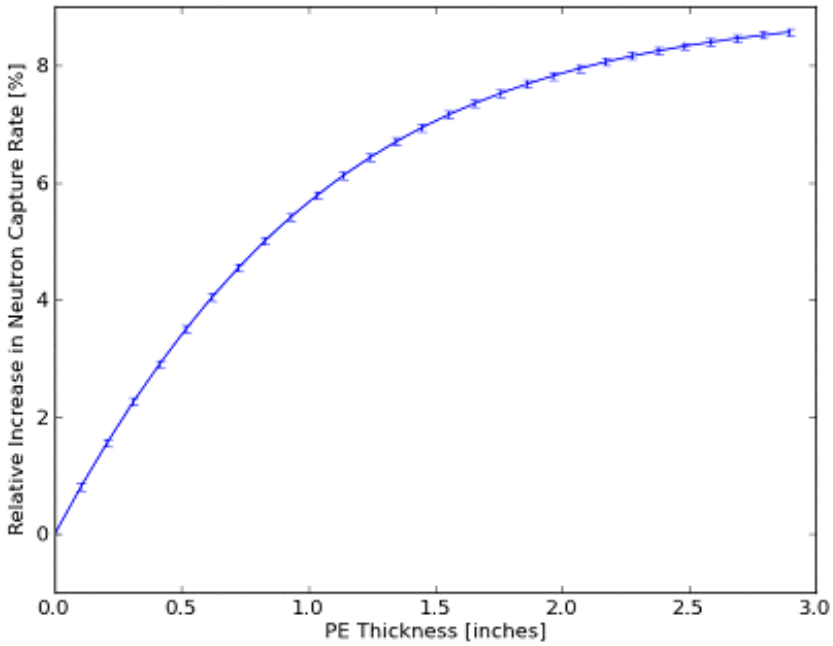

Figure 3. Relative increase in the neutron capture rate versus thickness of polyethylene placed behind the NEMA enclosure.

2.2 Improved Neutron Capture on Front of Detector

One of the limitations that constrained the design of the PVT-NG was that any materials placed in front of the sensor to enhance the neutron detection efficiency would reduce the gamma-ray sensitivity. The prototype used a 0.25″-thick sheet of PVC in front of the sensor, which introduced a small amount of attenuation for low-energy gamma rays. However, for a typical neutron energy profile, only about 10% of the neutrons are captured in this layer of PVC. The inefficiency for neutron-to-gamma conversion on the front face of the sensor is the principal limitation for the sensitivity because neutrons that enter the face of the detector are as likely to leak back out the front face as they are to go deeper into the sensor.

Chlorine in the form of PVC was selected as the neutron-to-gamma conversion material in the PVT-NG sensor because chlorine has a high neutron cross section, it emits high energy gamma rays, and PVC is both inexpensive and nontoxic. One of the things considered for the modified unit was to use materials with higher neutron cross sections. Gadolinium and cadmium are excellent choices with respect to neutron cross section, but tabulations are not available for the production of gamma-ray continua following neutron capture. Therefore, experimentation was performed to evaluate the performance of gadolinium and cadmium versus PVC. Figure 4 shows spectra that were recorded by exposing a NaI detector to a neutron source while it was placed behind sheets of these three materials. This plot shows that cadmium and gadolinium both exhibit much greater continuum below 4000 keV relative to PVC. However, the continuum produced by PVC above 5 MeV is approximately the same as cadmium, and gadolinium produces almost no continuum in this region. Since neutron detection in the PVT-NG sensor is based on gamma rays that deposit more than 3200 keV in the sensor, the emission of low-energy gamma rays does not contribute to neutron detection. Therefore, neither of the alternate materials offered substantial advantages, and they are much more expensive then PVC. Cadmium would also attenuate gamma rays if it were to be placed in front of the detector, and it is toxic, whereas PVC is not. Accordingly, it was concluded that PVC is a better choice than cadmium or gadolinium for use in a portal.

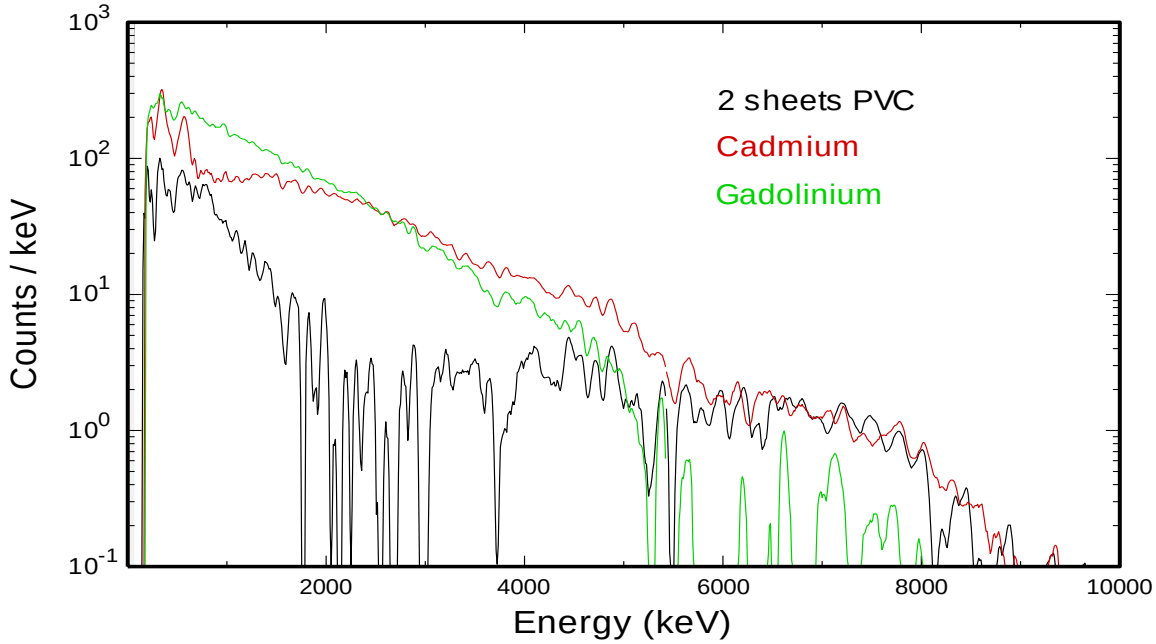

Figure 4. The spectrum recorded by a 2″×4″×16″ NaI detector while it was exposed to a ^{252}Cf source. The three spectra represent neutron-to-gamma conversion produced by sheets of the following materials, which were placed in front of the detector: PVC (black); cadmium (red); gadolinium (green).

A goal that was not completed during development of the PVT-NG prototype was evaluation of the performance of an iron collimator in front of the sensor. Although iron has a lower neutron cross section than chlorine, the neutron conversion efficiency can exceed PVC because of the much high density of if iron in steel. Like chlorine, neutron capture by iron produces a series of gamma rays in the 7-MeV region. A substantial amount of iron would introduce excessive gamma-ray attenuation if it were inserted as a continuous sheet in front of the detector. However, strips of iron in a horizontal venetian blind arrangement would not obstruct the gamma rays excessively, and they might even improve gamma-ray detection by shielding the detector from some of the ground scatter and Naturally Occurring Radioactive Materials (NORM) in the soil. Neutrons, on the other hand, generally enter and exit the face of the detector at an angle, so a substantial portion of the neutrons would intercept the iron. The high-energy gamma rays emitted by neutron absorption reactions would then be detected by the PVT panels.

Figure 5 shows the placement of the iron strips in front of the detector. Each strip would be approximately 1/8″ thick and 3/4″ long with a 1″ spacing between strips. Figure 5 also shows insertion of 2″ of polyethylene behind the NEMA enclosure. Figure 6 shows a detail at the bottom of the detector panels. As described in reference 1, the bottoms and tops of the PVT detectors are shielded because of the non-linear relationship between pulse height and energy for gamma rays that interact near the photomultiplier tubes. The iron strips are expected to increase the neutron sensitivity by about 30%, but there is considerable uncertainty in this estimate.

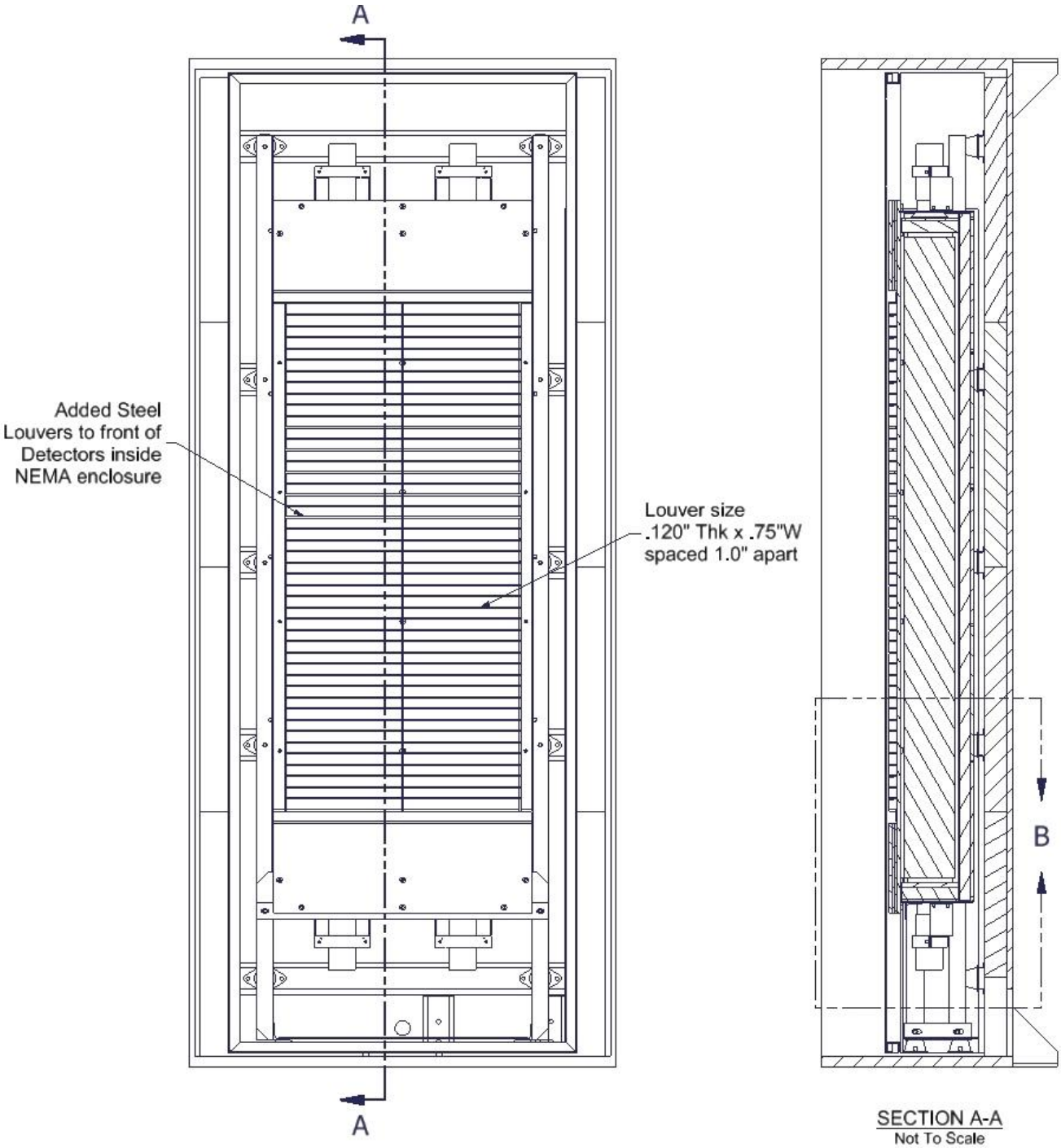

Figure 5. Design plan of the Version 2 of the PVT-NG sensor.

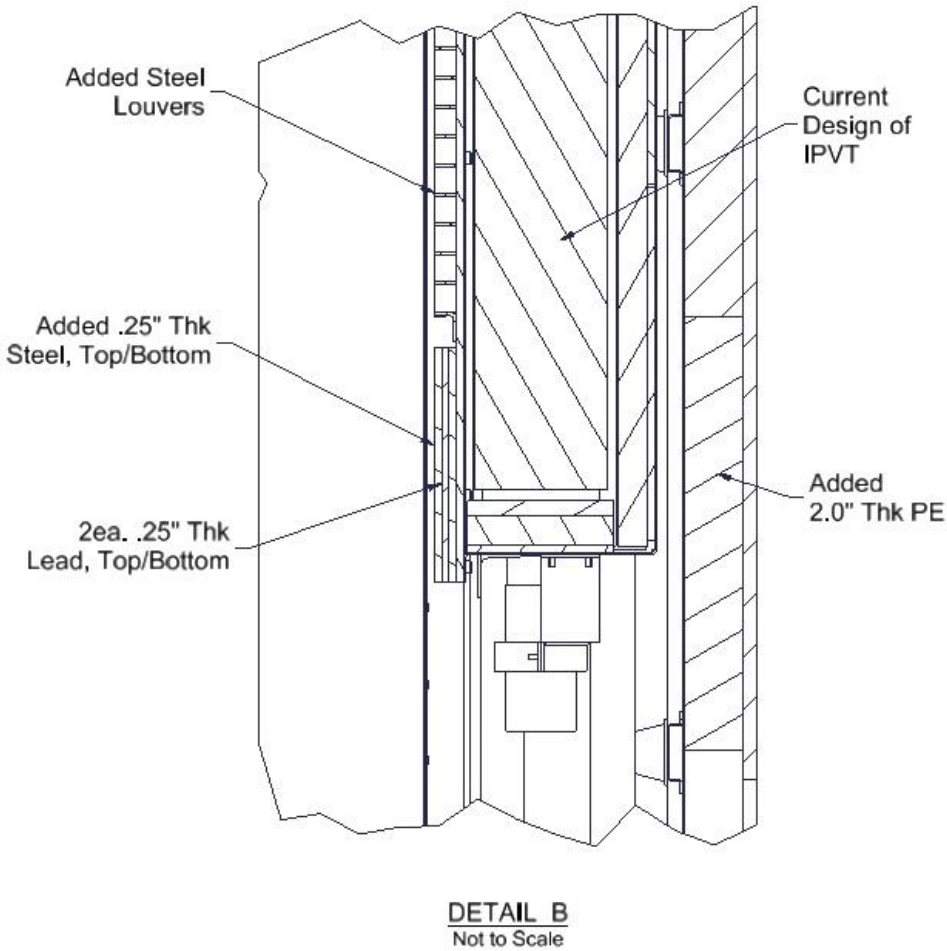

Figure 6. Design detail at the base of the PVT-NG sensor

2.3 Coincidence Summing Both PVT Detectors

A photomultiplier tube (PMT) is attached to each end of the two PVT detectors in the PVT-NG sensor. When gamma rays interact in a detector, the pulse heights that are recorded simultaneously by both of the attached PMTs are summed, which improves the resolution relative to what would be achieved if the detector only had PMTs on one end. One objective that was not completed during fabrication and testing of the prototype was an evaluation of coincidence summing the output of all four MCAs. Coincidence summing the four outputs should improve the sensitivity by the following mechanism. Over 8 MeV of energy is deposited in the resulting nucleus when neutrons are captured by chlorine. A high-energy gamma ray with a discrete energy is emitted following some of these reactions, but many of these reactions result in the emission of several gamma rays from energy levels that are very closely spaced, which leads to the emission of a gamma-ray continuum rather than distinct photons . These gamma rays may not have sufficient energy to score as a neutron detection event on an individual basis, but the sum of the energies of multiple gamma rays may have sufficient energy. In fact, the detector efficiency for gamma rays in the 2 to 3 MeV range is greater than the efficiency for higher energy gamma rays, so splitting the energy into multiple gamma rays may be advantageous relative to detection of a single high-energy gamma ray. Since the two PVT detectors are in close proximity, they are well positioned to perform coincidence measurements. The software that runs the PVT-NG sensor was written to utilize this data, but the task of debugging the EventBuilder software did not leave sufficient time to attempt to utilize the coincident gamma rays. It is hard to estimate how this would enhance the neutron sensitivity because the partitioning of energy in the nucleus between emitted gamma rays is not known. We estimate that utilization of the coincidence gamma rays would improve the neutron sensitivity by about 10% relative to the PVT-NG prototype.

3 Conclusions

The three design modifications discussed in this final report would have been performed to improve the neutron sensitivity of Version 2 of the PVT-NG sensor if the project had not been terminated prematurely. Collectively, these modifications were expected to increase the neutron sensitivity by about 50% relative to the PVT-NG prototype. Hence, the anticipated neutron sensitivity of the modified sensor was estimated to be about 2.8 cps/ng for bare ^{252}Cf, which exceeds the DNDO requirement. The original version of the PVT-NG prototype was more sensitive to moderated neutron sources, and the sensitivity to moderated sources should also have improved. Therefore, the modified sensor should have exceeded the DNDO neutron sensitivity requirements for all neutron source configurations.

One performance criteria that would not have been achieved by the PVT-NG sensor is immunity to very strong gamma ray sources. Testing at Sandia and NNSS showed that the neutron count rate was relatively insensitive to gamma ray sources below a few hundred micro-Curies. Version 2 of the voxelSPEC MCA can operate at about four times the count rate that could be accommodated by the units that were used with the PVT-NG. Therefore, it was projected that the neutron count rate for Version 2 would not be affected appreciably by a gamma ray source with an activity below about 2 milli-Curies. Substantially stronger unshielded gamma ray sources would paralyze the gamma ray detector in any portal. This is not an operational problem because the system would alarm and an additional inspection would be performed due to the presence of the strong gamma-ray source. Nevertheless, dedicated neutron sensors can be superior to the PVT-NG design with respect to immunity to gamma ray sources.

The PVT-NG sensor development demonstrated several performance goals that may be useful in future portal designs. These achievements are listed below:

- Combined gamma and neutron sensitivity was obtained with a single type of detector. This capability makes maximum use of the detector volume, it simplifies the design, and it could reduce the cost of portals that use this approach.
- The resolution was improved by a factor of two relative to most existing portals, which generally use one or more MCAs on only one end of the PVT detector. The voxelSPEC MCA performed gain stabilization, and the improved resolution enabled energy calibration based on the Compton edge associated with 2614-keV gamma ray in background radiation. Improved resolution, gain stabilization, and in-field energy calibration would benefit any type of analysis technique that utilized spectral information, such as energy windowing.
- As shown in Reference 1, isotope identification can be performed based spectra that are measured with the PVT-NG sensor. The value of isotope identification versus performance that can be achieved by energy windowing techniques was not evaluated, and it is not clear which approach is superior. Nevertheless, the fact that isotope identification can be achieved based on analysis of PVT spectra is a significant accomplishment.

References

1) Dean J. Mitchell and Charles Brusseau, “Neutron Counting and Gamma Spectroscopy with PVT Detectors, Sandia National Laboratories Report SAND2011-4362 (June 2011).

2) Dean J. Mitchell, Lee T. Harding and Kenneth R. Smith, “Neutron Detection with Gamma-Ray Spectrometers, Sandia National Laboratories Report SAND2009-5449 (August 2009).

Distribution

1	MS0782	Dean Mitchell	6633 (electronic copy)
1	MS0782	Charles Brusseau	6633 (electronic copy)
1	MS0899	Technical Library	9536 (electronic copy)
1	MS0899	RIM-Reports Management	9532 (electronic copy)

External

Greg Slovik DHS/DNDO Gregory.Slovik@dhs.gov

1125 15th Street NW
Washington, DC, 20005
(202) 254-7222

Sandia National Laboratories