SANDIA REPORT
SAND2009-1702
Unlimited Release
Printed March 2009

Iodine Transport Analysis in the ESBWR

Michael F. Young, Pamela Longmire, Randall O. Gauntt, and Donald A. Kalinich

Prepared by
Sandia National Laboratories
Albuquerque, New Mexico 87185 and Livermore, California 94550

Sandia is a multiprogram laboratory operated by Sandia Corporation,
a Lockheed Martin Company, for the United States Department of Energy's
National Nuclear Security Administration under Contract DE-AC04-94AL85000.

Approved for public release; further dissemination unlimited.

Sandia National Laboratories

Issued by Sandia National Laboratories, operated for the United States Department of Energy by Sandia Corporation.

NOTICE: This report was prepared as an account of work sponsored by an agency of the United States Government. Neither the United States Government, nor any agency thereof, nor any of their employees, nor any of their contractors, subcontractors, or their employees, make any warranty, express or implied, or assume any legal liability or responsibility for the accuracy, completeness, or usefulness of any information, apparatus, product, or process disclosed, or represent that its use would not infringe privately owned rights. Reference herein to any specific commercial product, process, or service by trade name, trademark, manufacturer, or otherwise, does not necessarily constitute or imply its endorsement, recommendation, or favoring by the United States Government, any agency thereof, or any of their contractors or subcontractors. The views and opinions expressed herein do not necessarily state or reflect those of the United States Government, any agency thereof, or any of their contractors.

Printed in the United States of America. This report has been reproduced directly from the best available copy.

Available to DOE and DOE contractors from
U.S. Department of Energy
Office of Scientific and Technical Information
P.O. Box 62
Oak Ridge, TN 37831

Telephone: (865) 576-8401
Facsimile: (865) 576-5728
E-Mail: reports@adonis.osti.gov
Online ordering: http://www.osti.gov/bridge

Available to the public from
U.S. Department of Commerce
National Technical Information Service
5285 Port Royal Rd.
Springfield, VA 22161

Telephone: (800) 553-6847
Facsimile: (703) 605-6900
E-Mail: orders@ntis.fedworld.gov
Online order: http://www.ntis.gov/help/ordermethods.asp?loc=7-4-0#online

SAND2009-1702
Unlimited Release
Printed March 2009

Iodine Transport Analysis in the ESBWR

Michael F. Young, Pamela Longmire, Randall O. Gauntt, and Donald A. Kalinich
6762 Reactor Modeling & Analysis
Sandia National Laboratories
P.O. Box 5800
Albuquerque, New Mexico 87185-MS0748

Abstract

A simplified ESBWR MELCOR model was developed to track the transport of iodine released from damaged reactor fuel in a hypothesized core damage accident. To account for the effects of iodine pool chemistry, radiolysis of air and cable insulation, and surface coatings (i.e., paint) the iodine pool model in MELCOR was activated. Modifications were made to MELCOR to add sodium pentaborate as a buffer in the iodine pool chemistry model. An issue of specific interest was whether iodine vapor removed from the drywell vapor space by the PCCS heat exchangers would be sequestered in water pools or if it would be rereleased as vapor back into the drywell. As iodine vapor is not included in the deposition models for diffusiophoresis or thermophoresis in current version of MELCOR, a parametric study was conducted to evaluate the impact of a range of iodine removal coefficients in the PCCS heat exchangers. The study found that higher removal coefficients resulted in a lower mass of iodine vapor in the drywell vapor space.

CONTENTS

1 Introduction 7
1.1 Background 7
1.2 Regulatory Issue 9
2 Problem Descripton 13
2.1 MELCOR Nodalization 13
2.1.1 Reactor Vessel. 13
2.1.2 Containment. 14
2.1.3 PCC, Expansion, and Storage Pools. 15
2.1.4 Environment. 15
2.2 Iodine Pool Model 21
2.3 Application of Iodine Pool Model 21
2.4 Iodine Pool Model Setup and Input 23
2.4.1 Extra RN Classes 23
2.4.2 Surface Deposition Classes 23
2.4.3 Pool Radiolysis Dose Input 24
2.4.4 Cable Radiolysis 24
2.4.5 Buffering 24
3 Summary of ESBWR Iodine Results 25
3.1 Iodine absorption in the PCCS 31
3.2 Acid Generation 31
4 Considerations on the pool modeling 35
5 Discussion and Conclusions of the Orginal March 2008 Analysis 37
6 Updates to the Original March 2008 Analysis 37
6.1 Model and Code Changes 37
6.2 Results 39
6.3 Summary and Conclusions of the Update to the Original March 2008 Analysis 41
7 REFERENCES 43

FIGURES

Figure 1. Schematic of ESBWR Containment Systems. 8
Figure 2. Simplified Schematic of ESBWR Containment Illustrating Iodine Transport and Deposition Pathways. 9
Figure 3. PCCS Scrubbing of Aerosols and Vapors. 10
Figure 4. Schematic of MELCOR ESBWR Containment Model. 16
Figure 5. MELCOR Nodalization of the ESBWR Reactor Pressure Vessel (RPV). 17
Figure 6. MELCOR Nodalization of the ESBWR Wetwell. 18
Figure 7. MELCOR Nodalization of One of Two PCCS Representative Units. 19
Figure 8. MELCOR Nodalization for the PCCS, Expansion, and Storage Tanks. 20
Figure 9. Total Class Masses in ESBWR MELCOR Problem 26
Figure 10. Total Elemental Iodine (RN Class 4) Mass by CV Type 26
Figure 11. Pool pH 27
Figure 12. Mass of Iodine Adsorbed on the Walls of the RPV 27
Figure 13. Masses of Nitric and Hydrochloric Acid in the Problem 32
Figure 14. Nitrogen Mass in Atmosphere of CVs 33
Figure 15. Drywell Iodine Vapor Mass as a Function of PCCS Removal Coefficient 39
Figure 16. Pool pH 40

TABLES

Table 1. Data Summary for ESBWR MELCOR Run 29

1 INTRODUCTION

The focus of this study is to examine the chemistry and transport behavior of fission product iodine released from damaged reactor fuel in a hypothesized core damage accident in the Economic Simplified Boiling Water Reactor (ESBWR). While most iodine released in a core melt accident is known to be released in an aerosol form as either CsI or other compound forms, this aerosol can subsequently be deposited into aqueous pools such as sumps, water films on walls, or in the case of the ESBWR, be transported into the passive containment cooling system (PCCS), where the iodine can become dissolved into an aqueous form. Once dissolved, depending on the pH of the water, radiolytic processes, effects of buffers and acids, etc., the iodine can re-evolve into a gaseous form, generally elemental I_2.

This gaseous elemental iodine can accumulate in the reactor containment and subsequently escape to the environment, This study seeks to quantify the transport processes affecting elemental iodine associated with partitioning between pools and atmosphere and with its uptake onto the water films in the PCCS system. Essentially, a quasi-steady-state solution is sought for the iodine airborne concentration in the ESBWR containment, accounting for uptake of iodine in water films and pools and the re-evolution of gaseous iodine from water pools into the containment atmosphere. In the following analysis a design basis large break Loss-of-Coolant Accident (LOCA) is used to investigate the iodine transport processes in the ESBWR containment. While other design basis accidents (DBA) sequences can be postulated, the long-term behavior of iodine is not significantly affected by the particulars of the initiating DBA thermal-hydraulics.

1.1 Background

The ESBWR passive safe containment design makes use of a unique passive containment cooling system, the PCCS, in order to transport decay heat from a damaged reactor core to a water-pool heat sink and thereby limit the pressure experienced by the reactor containment. A schematic of the ESBWR containment system is shown in Figure 1. In brief, pressure control in the ESBWR under various postulated accident conditions is accomplished by the actions of the suppression pool and the PCCS system, where the suppression pool can absorb the prompt energy released from a large LOCA event or safety relief valve depressurization event, and the PCCS can absorb longer-term energy released from the Direct Pressure Vent valves (DPV) and protracted reactor vessel boiling.

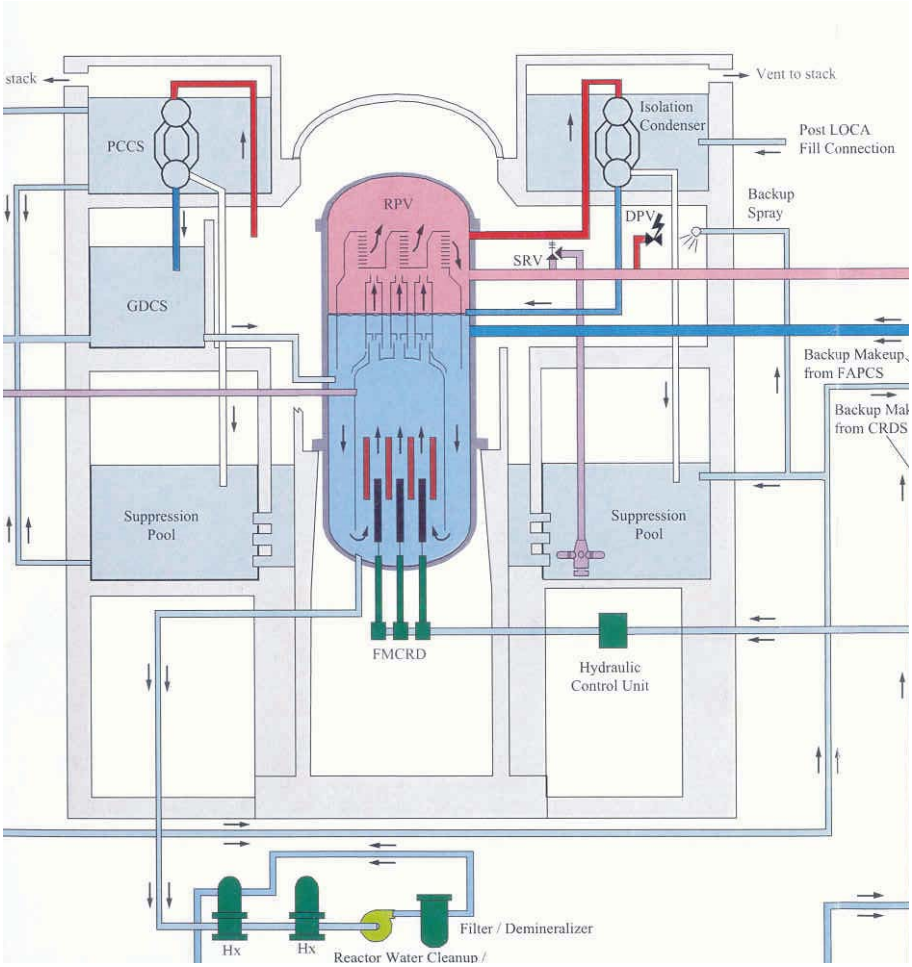

Figure 1. Schematic of ESBWR Containment Systems.

Following any initial pressure transients associated with vessel blowdown, long term heat rejection in the ESBWR is accomplished by heat rejection to the PCCS water pools, transported by the flow of steam drawn into the cool condenser tubes of the PCCS. The ESBWR is designed in such a way that water is maintained in the reactor vessel by a supply from the Gravity Drain Condensate System (GDCS) pool or by cavity flooding in the event of a pipe break accident. Steam produced by boiling in the vessel enters the containment by way of the open DPV lines and flows into the PCCS where the heat is rejected to the PCCS pool. The condensate from the PCCS returns to the GDCS pool and subsequently returns to the reactor vessel.

While the action of the PCCS should prevent core damage, licensing requirements and regulations require that the containment meet certain performance requirements even in the event of a significant core melt accident. For demonstrating these requirements the licensee is allowed to assume containment conditions associated with a design basis accident, but must show adequate containment performance with a significant release of fission products to the reactor

for example. Figure 2 illustrates the relevance of this requirement as it pertains to iodine transportation and deposition within the ESBWR.

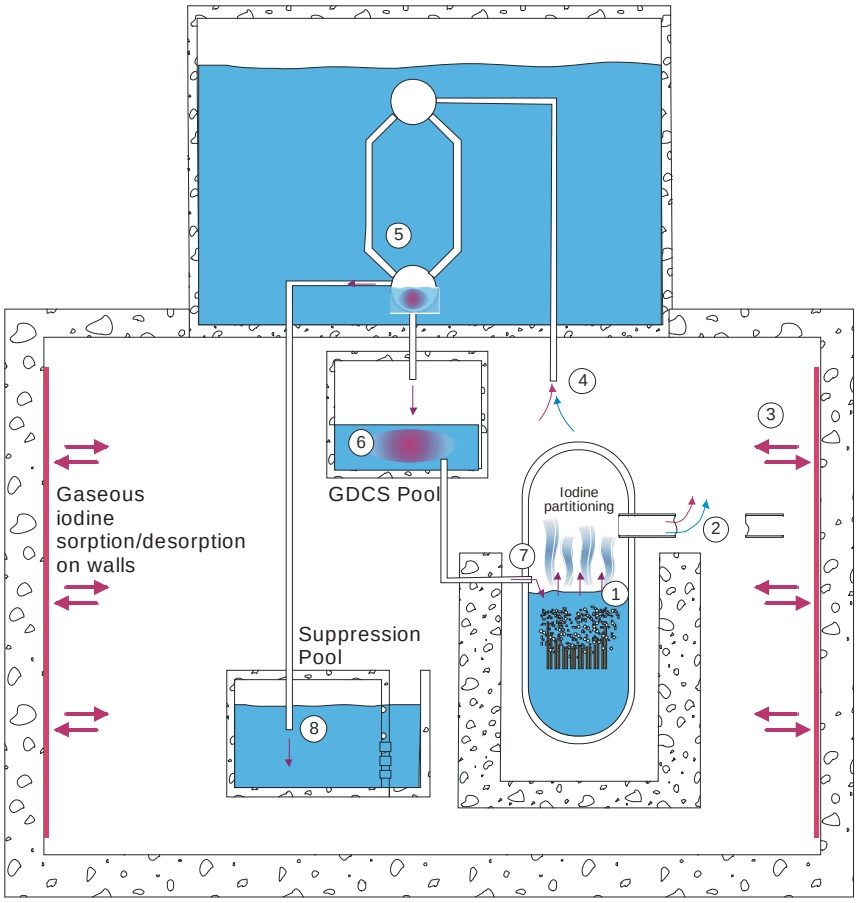

Figure 2. Simplified Schematic of ESBWR Containment Illustrating Iodine Transport and Deposition Pathways.

1.2 Regulatory Issue

In this regulatory application, a design basis accident is assumed to have occurred where fission products have been released into the containment as a result of a presumed significant core damage. While Figure 2 illustrates a main steam line break, the analyses proposed will focus on three alternate scenarios that have been proposed by General Electric (GE) in the design certification process. This release to the containment is described by the NUREG-1465 regulatory source term [Soffer, L., *et al*., 1995]. The intent of the analysis is to demonstrate that under these assumed conditions that control room and site boundary dose limits are not exceeded.

In the ESBWR, several mitigating processes occur in the containment that serve to limit the airborne radioactivity and thereby limit releases to the environment. Since much of the airborne

radioactivity is associated with aerosol particles, aerosol deposition processes occurring in the ESBWR are quite important in limiting releases from the containment. Chief among these deposition mechanisms are gravitational settling, and diffusiophoresis, the latter being quite significant within the strong condensing environment in the PCCS tubes, as illustrated in Figure 3.

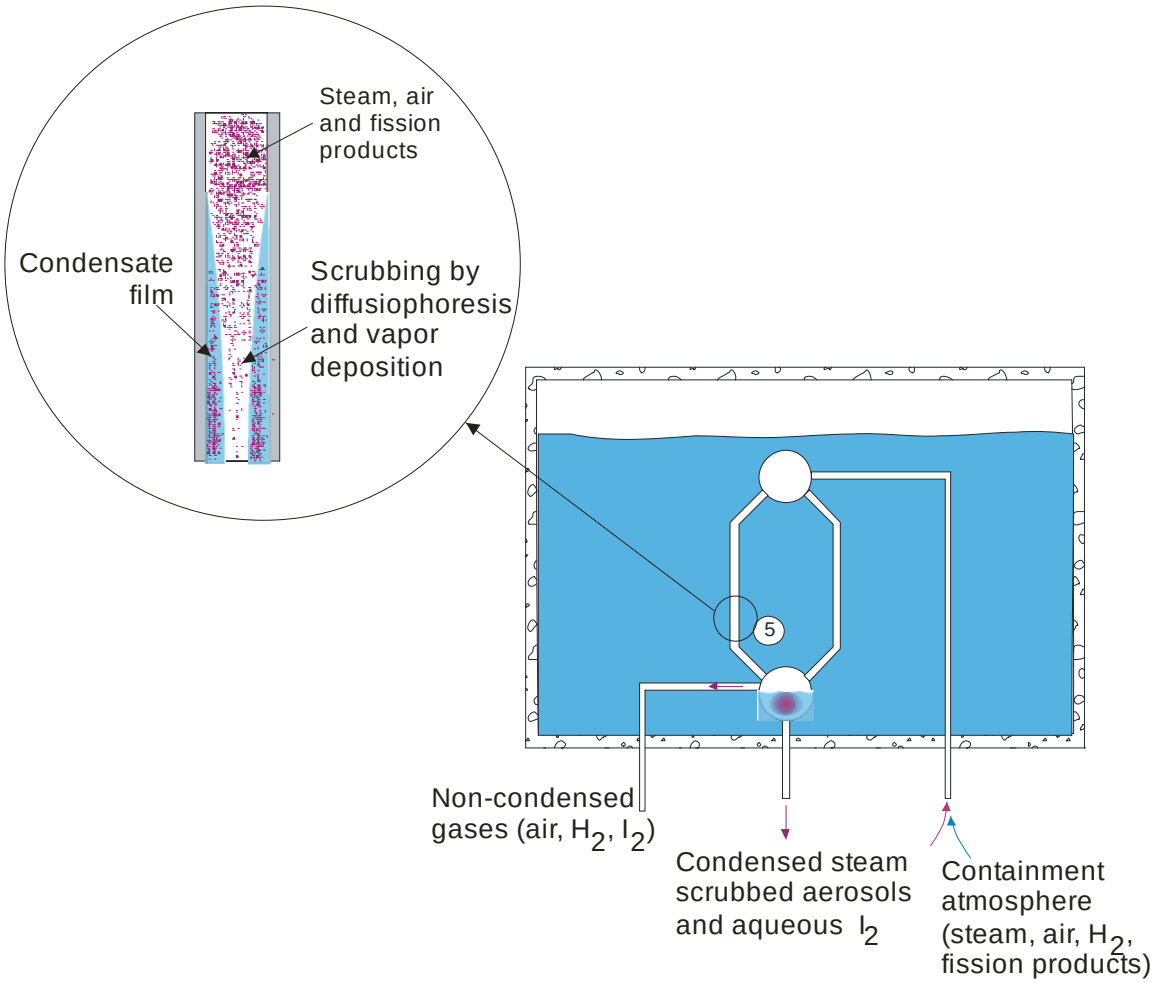

Figure 3. PCCS Scrubbing of Aerosols and Vapors.

The condensation occurring in the PCCS tubes driven by the boiling of water in the reactor vessel serves as a very effective means of scrubbing radioactive particulate in the drywell volume, and in time most drywell airborne particulate will be captured in the wetwell volume or in the PCCS condensate. Note that noble gases are not captured by the PCSS; however, they may be accumulated in the wetwell volume with other non-condensible gases that are drawn into the PCCS. Since the PCCS condensate drains back into the reactor vessel, much of the original inventory of airborne particulate material specified by the NUREG-1465 source term will reside in the water of the reactor vessel. Most fission products will be retained in the vessel water owing either to aqueous insolubility or to a non-volatile ionic form dissolved ionic Cs^+ for example. The behavior of iodine however is not as clear, as described as follows.

Iodine initially released to the containment as specified by the NUREG-1465 alternative source term is assumed to be comprised of approximately 5% gaseous form as elemental I_2 and organic CH_3I, and 95% particulate form as CsI. Both gaseous and particulate iodine can be scrubbed from the atmosphere in the PCCS tubes and delivered back to the vessel water by the draining condensate. Within the boiling vessel, the CsI will subsequently disassociate to form Cs^+ and I^-. Here, the aqueous I_2 and CH_3I together with the disassociated I^- undergo complex chemical reactions in the high radiation environment of the boiling vessel, producing a wide range of chemical and ionic forms of iodine, including volatile I_2. The equilibrium aqueous concentration of I_2 is strongly affected by water radiolysis products and water pH. This dissolved I_2, much of which was originally in the form of CsI when initially released to the containment, can subsequently return to the atmosphere as gaseous iodine at the surface of the water pool in the reactor vessel, and subsequently carried to the drywell atmosphere by the steam leaving the vessel. This volatilized iodine, of course, again flows into the PCCS where it can be dissolved into the condensate and re-introduced to the vessel. In this way, one can see that there is a continuous refluxing of iodine from the PCCS to the vessel, and from the vessel back into the drywell atmosphere, and back into the PCCS tubes. Additionally, airborne volatile iodine in the drywell atmosphere can become adsorbed on walls and wetted surfaces. Figure 2 illustrates the various transport pathways encountered by iodine in the ESBWR containment. The combination of sources and sinks will lead to a steady-state concentration of gaseous iodine in the containment that can leak to the control room and the environment. The objective of the MELCOR calculations is to determine the magnitude of the steady state iodine concentration and the rates that iodine and noble gases leak from the containment.

Documented in this report are the results from calculations for a main steam line break (MSLB) scenario for the ESBWR. In the following sections, a description of the MELCOR ESBWR containment model is presented.

2 PROBLEM DESCRIPTON

The MELCOR ESBWR model was adapted from an early severe accident (SA) input deck provided by ERI [ERI, 2006]. The ERI model was extensively modified to conform to the needed detail and conservative licensing guidelines recommended for DBA containment analysis. Additionally, the early SA input was updated to reflect plant design changes and clarification of data provided in various GE responses to NRC issued Requests for Additional Information. The current ESBWR model, Figure 1, reflects the most recent plant design changes as referenced in the Design Control Document (DCD) Rev 4 submittal [GE Nuclear, 2007]. The ESBWR model is divided into four input groupings by component location and connection as follows:

- reactor vessel and Isolation Condensers (ICs),
- containment (drywell, wetwell, passive cooling condensers),
- external pools (PCCS, expansion, and storage tanks)
- environmental regions.

2.1 MELCOR Nodalization

2.1.1 Reactor Vessel.

Shown in Figure 2 is the reactor vessel model that includes lower plenum, core, downcomer, chimney, separator/dryer, and steam dome regions. The core region contains three radial fuel sections that are, in turn, vertically segmented into three axial regions. The fuel rods are modeled as simple cylindrical heat structures with a prescribed internal heat source consistent with the power profile and magnitude associated with the reactor rating and decay heating subsequent to scram. Structural steel in the vessel and vessel walls are included in the reactor vessel model. Initialization of the reactor water level (collapsed), flows, fuel and structure temperatures are obtained by running the model for a pre-conditioning time period of 300 seconds. Due to an inability of the code to model two-phase flow and heat regimes, the reactor power was scrammed 30 seconds prior to the main steam line guillotine break to prevent non-physical excursions of fuel temperature in high void regions under full power conditions. The preconditioning has two important goals required for blowdown analysis; 1) establishment of water inventory (collapse level) at operational pressure and temperature, and 2) the calculation, approximately, of fuel and other structure temperatures at full power rating. These pre-conditioning values are required for a prediction of blowdown water releases to the containment and through balance-of-plant (until containment isolation), and later for predicting the start of the quench during the GDCS draindown. Some sources of water injections to the reactor subsequent to scram are specified, not calculated. These include the feedwater inlet coastdown flow (for ~5 seconds) and the injection from the Standby Liquid Control System (SLCS). External liquid water rates and temperatures defining these sources are obtained from GE responses to issued Requests for Additional Information (RAIs) [Tills, 2007].

For the sequencing of Automatic Depressurization System (ADS)/SLCS and GDCS valve actuation, the model is consistent with the most recent design information where actuation is dependent on a Level 1 signal with associated time delays. Level 1 signal time is calculated in the code based on the collapse water level in the downcomer. The time delay for isolation of the reactor vessel from the balance-of-plant is specified according to the value listed in the DCD (13 seconds).

Modeling for the isolation condensers is included in the MELCOR input decks. However, for the bounding calculations, heat removal is neglected as indicated in the DCD. The initial inventory of water in the IC units is transferred to the reactor vessel by gravity during the blowdown period. The initial IC water inventory included in the model reflects a design change in the IC units as indicated in the DCD Rev 4 (doubling the value used in DCD Rev 0).

2.1.2 Containment.

The containment model is presented in the nodalization sketch shown in Figure 4. Significant to this modeling is the characterization of the drywell as a single volume cell. The cell includes the drywell head, upper, annulus, and lower regions. The three GDCS tanks are modeled separately. The reason for treating the drywell region as a single volume is the conservative licensing guidelines that recommend this modeling approach in order to maximize noncondensible gas transfers to the wetwell during the blowdown period; that is, transfers with minimal trapping of gases in the drywell. Minimization of drywell gas trapping produces the maximum pressure increase during the time that the main (horizontal) vents are cleared, and also tends to increase maximum drywell pressure late in the accident after the vents close. Expansion of gas volume above the falling GDCS pool surface level are connected by double pathways between the GDCS and drywell that allow steam and gas circulation between the tanks and drywell volume. This treatment for dead-ended gas space represents a conservative modeling method (minimizes noncondensible gas trapping) which has also been observed to be physically justified.

The three main vents connecting the drywell to wetwell suppression pool are modeled using a prescription for a conservative estimation of inertial lengths as defined in the CONTAIN code user guidance for BWR plant modeling [CONTAIN, 2003]. ESBWR vent pipes are lumped together and modeled as a single cell volume with a pool. Figure 4 is a representation of the main vent and wetwell modeling. Conservative temperature stratification in both the suppression pool and gas space is included in the MELCOR modeling following the procedures outlined in the ESBWR pre-application certification submittal. These modeling procedures are indicated in the figure, where circulation is inhibited such that buoyancy driven stratification is enhanced.

Heat sink structures are limited in the MELCOR model, providing a conservative treatment with respect to early and late time heat removal. Structures that are exposed only to the wetwell gas and pool regions are included. These structures are defined as inner and outer walls, with details provided in DCD Rev 4 section 6A [GE Nuclear, 2007].

A composite model of three PCCS condensers located on either side of the storage/dryer pool and reactor well is included in the MELCOR input deck. Each condenser model is connected to a

single volume tank that contains excess water inventory for three condensers. The overlying atmospheric pressure in the tank volumes is artificially elevated in order to increase the saturation temperature at the approximate mid-plane of the submerged PCC condenser tubes. This procedure for setting atmospheric pressure to adjust pool saturation temperature was developed for a single volume tank to improve PCCS modeling accuracy, as validated in MELCOR analysis of the GE PANTHERS PCCS testing [Tills, 2005]. Shown in Figure 7 is the nodalization for one of the two composite PCCS units used in the ESBWR plant model. The small tube volumes in the upper level are included to better resolve heat removal rates during initial uncovering and reflooding of tubes during the long-term cooling period. Heat removal from the tubes and transfer to PCCS tanks is calculated in a mechanistic manner using the MELCOR wall condensation modeling for forced internal flow with film tracking on the tubes' inner walls. Heat transfer to the PCCS tank pools is modeled using the empirical nucleate boiling equation in the code. The entire PCCS modeling approach has been validated through single and multiple tube test analyses performed with the CONTAIN and MELCOR codes [Tills, 2005].

2.1.3 PCC, Expansion, and Storage Pools.

Shown in Figure 8 is the layout for the PCCS, expansion, and storage pools. The IC tank volumes are included in the expansion tanks which are connected directly to the PCC tank. When the collapsed pool level decreases to 29.6 meters, valves connecting the storage and expansion tanks open transferring water to expansion pools on either side of the storage pool.

2.1.4 Environment.

Two environmental cells are included in the ESBWR plant model. One cell is connected to the external pool volumes and is used to set pool average saturation temperature for boil-off. The other environmental cell is thermally connected to the outer surfaces of the wetwell wall; and additionally, this cell is also connected to the steam dome of the reactor vessel, serving as a boundary condition for blowdown into the turbine prior to reactor isolation.

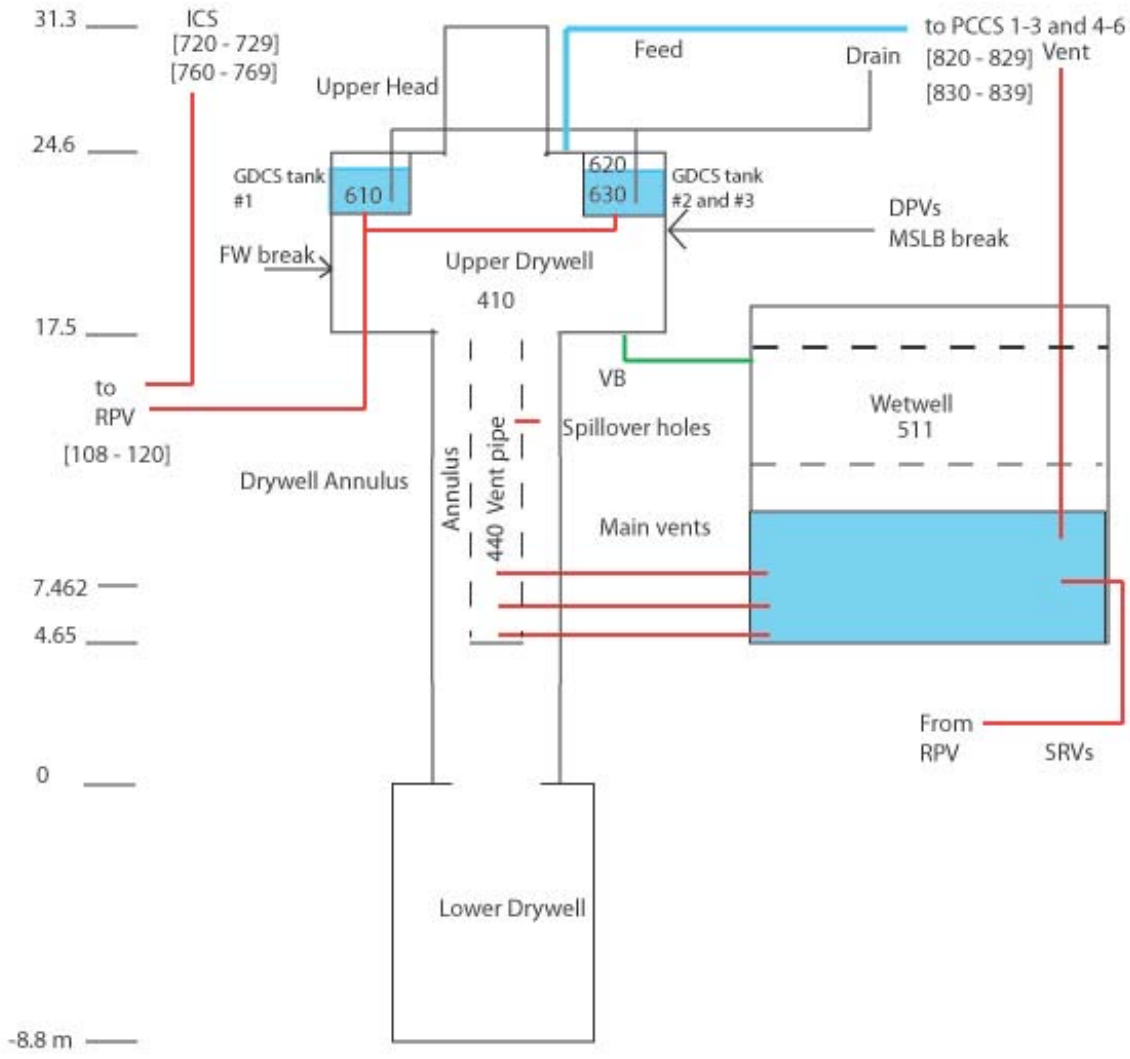

Figure 4. Schematic of MELCOR ESBWR Containment Model.

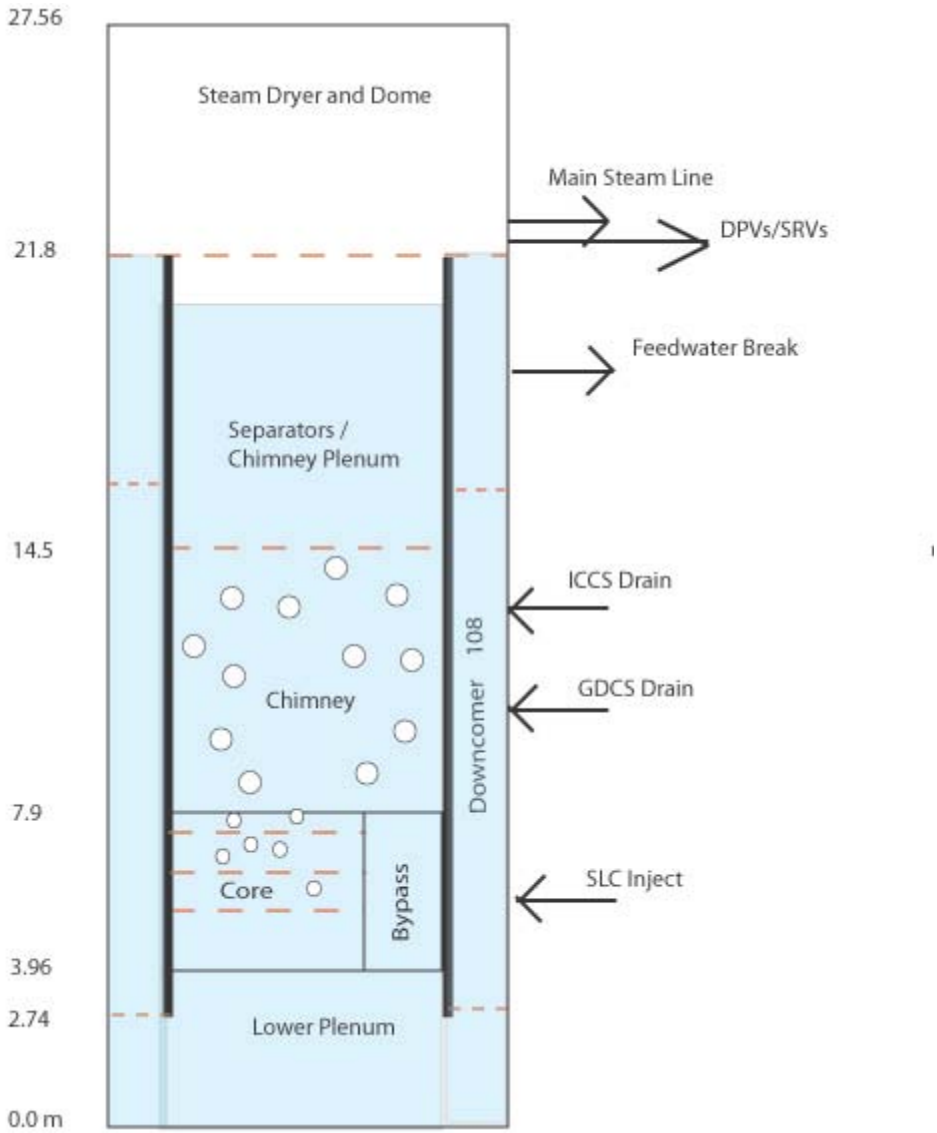

Figure 5. MELCOR Nodalization of the ESBWR Reactor Pressure Vessel (RPV).

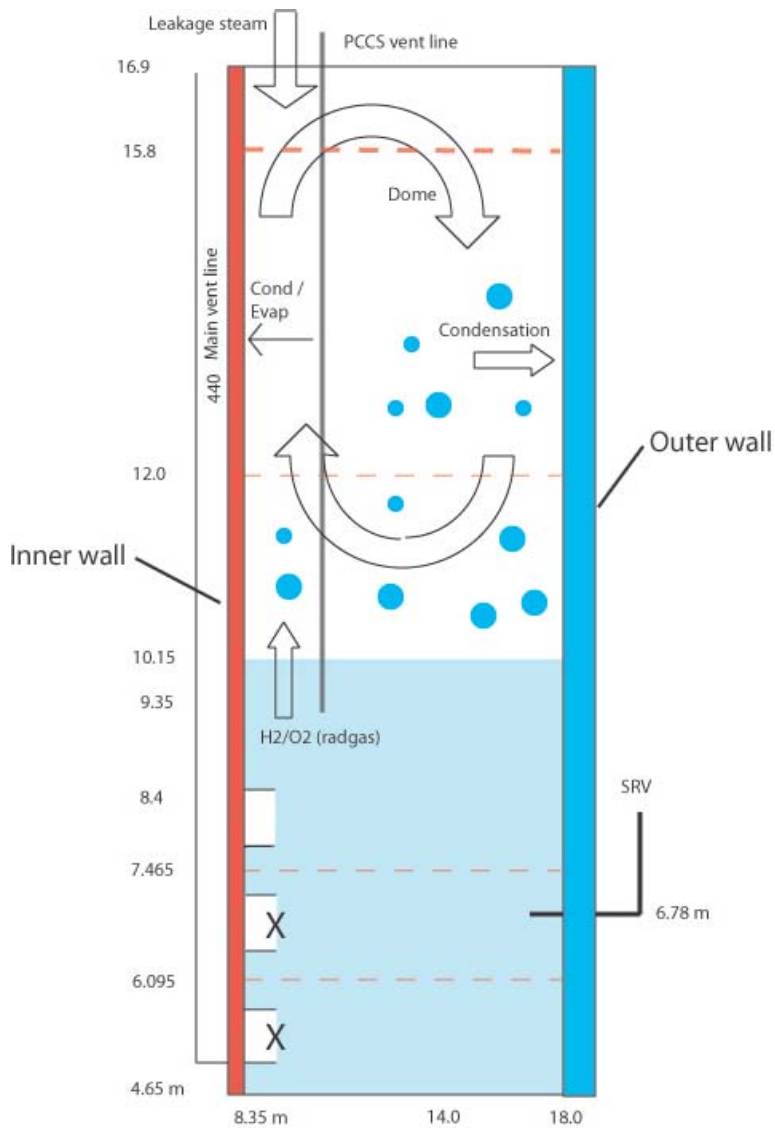

Figure 6. MELCOR Nodalization of the ESBWR Wetwell.

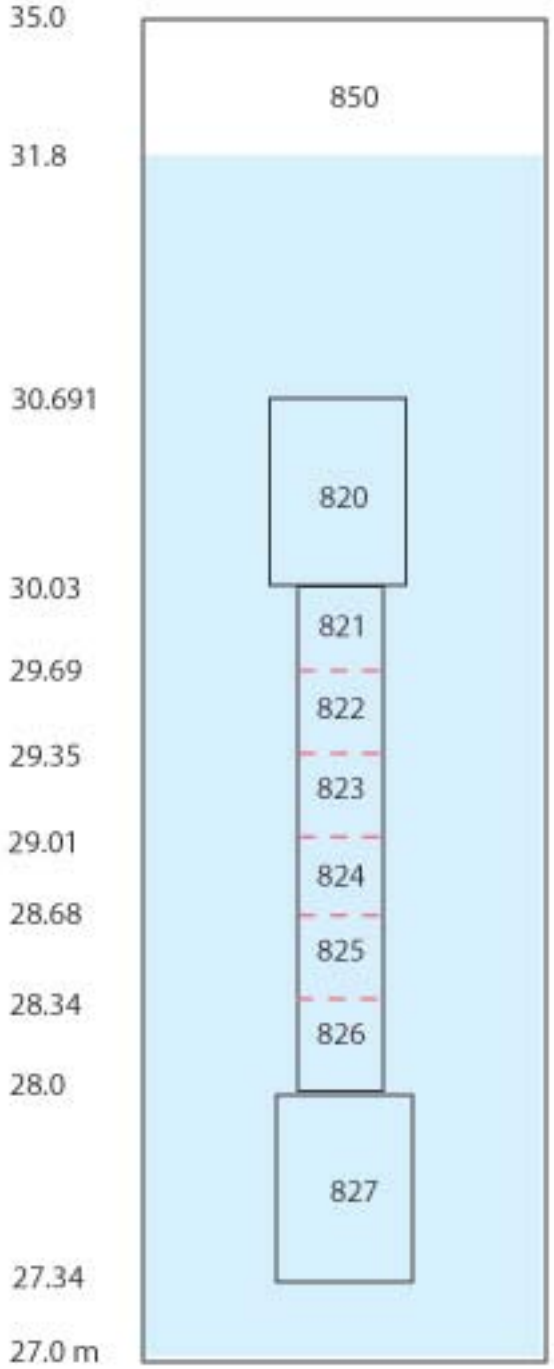

Figure 7. MELCOR Nodalization of One of Two PCCS Representative Units.

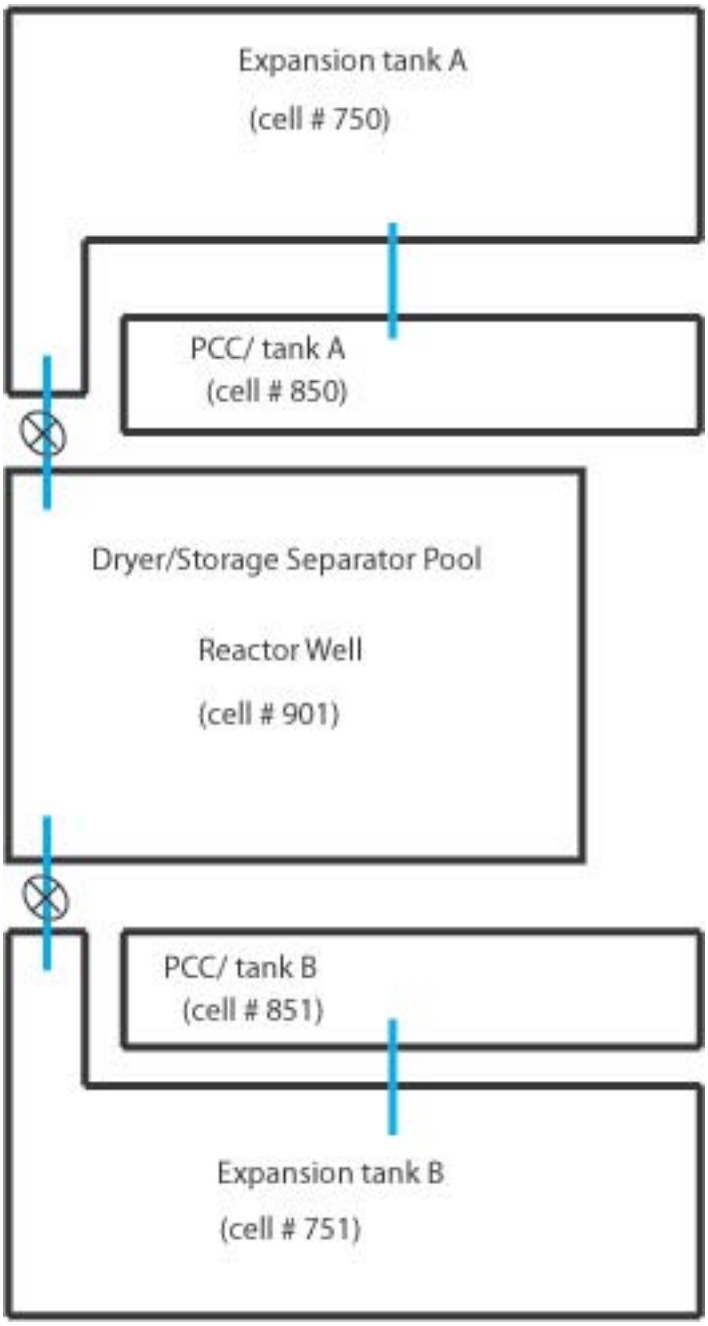

Figure 8. MELCOR Nodalization for the PCCS, Expansion, and Storage Tanks.

2.2 Iodine Pool Model

The Iodine Pool Model (IPM) implemented in MELCOR predicts iodine in the containment atmosphere during the late phase of accident sequences. The model uses known iodine chemistry to predict what factors affect the iodine concentration in the atmosphere, while allowing for additional chemical reactions. In the containment atmosphere, where gas-phase behavior is important, there are sub-models relating the radiolysis of the air and cable insulation to the generation of nitric acid and hydrochloric acid, respectively. On the structural surfaces, provision is made to account for the type of surface, thus allowing the extension to treat the effects of different paints and other surface coatings on iodine behavior. In the water pool, where liquid-phase behavior is important, the model determines the pH based upon the user controlled boric acid and phosphate buffering, the effects of cesium hydroxide, cesium iodide, and control rod silver released by the accident scenario chosen, and the effects of the acids introduced from the containment atmosphere due to radiolysis. The aqueous pool chemistry model then determines the speciation of iodine, particularly the important elemental, molecular, and organic forms, over the range of pH from 4 to 12. Thus, chemical systems that control pool pH can be examined as well as pools and films on surfaces that have no pH controls. With this combination of features, the iodine pool model provides the ability to conduct sensitivity studies and to incorporate new effects found in the course of ongoing research.

2.3 Application of Iodine Pool Model

The original ESBWR deck had the RPV and wetwell divided into many control volumes (CVs). This is not the conceptual model of the IPM. The IPM conceptual model is of a CV with a pool, atmosphere, and wall surfaces; subdividing this volume is going to cause the IPM to be on in some small parts of the total volume and off in others, because the pool aqueous chemistry model cycles on and off depending on certain criteria, such as a temperature range, pressure range, and minimum pool and atmosphere volumes. For this reason, the RPV and wetwell were changed to be one CV each in the volumes where the IPM would be used.

For the ESBWR problem, the RPV, wetwell, and drywell would have the IPM turned on. The CVs in the original RPV and wetwell input were thus combined so that each had a single CV for the volume where it was desired to use the pool model. The RPV CVs were combined to form a single lower plenum-core region-upper plenum CV, CV120, with a downcomer also consisting of one CV, CV108 (no pool model was used in the downcomer). The wetwell, previously subdivided into multiple CVs, was also combined into one, CV511. The lower drywell was already one CV, CV410.

The version of MELCOR used for the ESBWR problem is a modified version of 186YR, with input records added to turn on the pool model only in CVs input on a new record, RNIOCVnnn. Previous versions of the pool model required the iodine submodels (acid generation, deposition of iodine and acid on walls) to be on in all CVs, whereas the pool chemistry model was active in CVs satisfying the temperature/pressure/pool-atmosphere volume criteria (the criteria are typical of a containment pool, which is the intended use of the pool model). In this version, all iodine

pool models are off except in those CVs selected on RNIOCVnnn. This procedure allows the iodine pool model to be run only in those CVs where it is applicable, and prevents the model from running in CVs such as pipes, etc.

2.4 Iodine Pool Model Setup and Input

Setting up the pool model to run in MELCOR is fairly complicated, involving, besides the pool input, extra radionuclide (RN) classes and deposition classes. This extra input is specified on records other than the IPM records, so, although the input is described in the MELCOR User's Guide (UG), the use is not obvious.

2.4.1 Extra RN Classes

The extra RN classes for the iodine model are to allow transport of species occurring in the pool model between CVs, and are as described in the UG under the description of the RN1003 record. They are named classes for nitric and hydrochloric acids, I-, methyl iodide, borate and phosphate buffers, and AgI. Besides the DCH records, sensitivity coefficients are used to define the molecular weights and vapor curve properties for these classes. As extra classes, the default setting in MELCOR is to be pure vapor, meaning that the RN vaporization/deposition models are not used, and that the classes would go into the atmosphere immediately in a CV where both pool and atmosphere were present. However, the acids, methyl iodide, and I^-, although defined as pure vapor classes, are hardwired to stay in the pool in CVs where the pool model is off (amounts of these classes in the atmosphere will stay there). The borate and phosphate buffers, and AgI, are defined to be aerosols, meaning that they stay in the pool only. This must be specified on the SC7110 records by setting both the T parameter to -1.0 and setting the A parameter to a value greater than or equal to zero. Otherwise, both the vapor-only and aerosol-only flags are set.

The effect of these settings for extra classes is to keep pool ionic species, such as I^- and AgI, and acids and buffers, in the pool, even if transported to CVs where the pool model is not on. If in a CV where the pool model is on, acids can be transported between the pool and atmosphere, and the atmosphere and walls via the pool submodels.

2.4.2 Surface Deposition Classes

These are surface deposition classes for the surface deposition submodel. They are specified by setting the number of extended deposition classes (NCA2 parameter on RN1003) to 6 to account for the six defined classes. The deposition class numbering is not the same as the RN classes, because the deposition is for chemical and physical deposition of methyl iodide and molecular iodine. Note that deposition for the pool model only occurs on dry walls; wet walls absorb atmospheric species into the water film using the usual MELCOR models. In the ESBWR problem, the only concern is the deposition of RN class 4 (the physical deposition of molecular iodine).

2.4.3 Pool Radiolysis Dose Input

The pool radiolysis models require input of the radiation dose for use by iodine radiolysis in the pool, atmospheric generation of nitric acid, atmospheric iodine recombination, and release of hydrochloric acid from cable insulation by radiolysis. In ESBWR, these doses are taken as proportional to the amount of radioactive species present in the wetwell and drywell. In the RPV, the core retains the unreleased radionuclides and probably a large amount of the released radionuclides, so in the RPV the radiation dose was assumed proportional to the decay heat in the core.

2.4.4 Cable Radiolysis

Hydrochloric acid can be released from cable insulation by radiolysis. In ESBWR, cable mass (3400 kg) is assumed present only in the drywell.

2.4.5 Buffering

Buffering agents can be added to the pool water to keep the pool pH basic, so as to help retain molecular iodine in the pool rather than in the containment atmosphere. For the ESBWR, sodium pentaborate is added to the accumulator water (SLCS). This is modeled in the present problem using phosphate buffer, as chemistry for sodium pentaborate is not included in the pool chemistry model[1].

[1] The IPM model was subsequently modified to include sodium pentaborate as a buffer (see Section 6).

3 SUMMARY OF ESBWR IODINE RESULTS

This MELCOR problem run had the IPM on in the RPV (CV120), the wetwell (CV511), and the drywell (CV410). These components were all reduced to single CVs, where necessary, to allow the IPM to function. The problem input includes buffering from the accumulator water (modeled as tri-sodium phosphate), and treatment of the dose in the RPV as proportional to half the decay power in the intact fuel rods. Dose in other parts of the system is proportional to the radionuclide decay power in those components.

The run was carried out to 2.6×10^5 sec (3 days). Changes in the pool chemistry have generally leveled out by about 6×10^4 sec (0.694 days). Figure 9 shows the masses of the main species of interest (RN class masses). As can be seen in Figure 9, the mass of CsI in the system has gone down, the Cs and I being transferred to the CsOH class and the I^- class. This transfer of the CsI RN class to CsOH and I- is an artifact of the IPM; the pool species are still CsI. The molecular iodine class masses in the major system components are shown in Figure 10. Although iodine levels stay fairly constant in all components from 1000 min on, there is a ramp up starting around 3900 min in the GDCS. This corresponds to a step decrease in the adsorbed wall iodine in the RPV and increase in the RPV pool I^-. It is probable that the RPV walls, usually dry, became wetted and allowed the adsorbed iodine to wash off and drain into the RPV pool. The amount of iodine adsorbed on the RPV walls is shown in Figure 12. The RPV, wetwell and drywell pool pHs, shown in Figure 11, have leveled off at 8.8, 9.3 and 9.0, respectively.

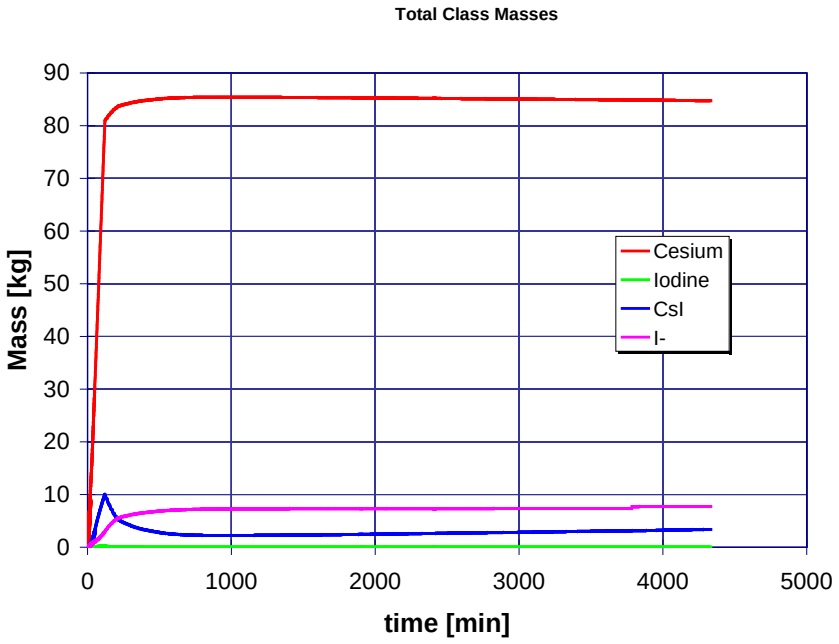

Figure 9. Total Class Masses in ESBWR MELCOR Problem

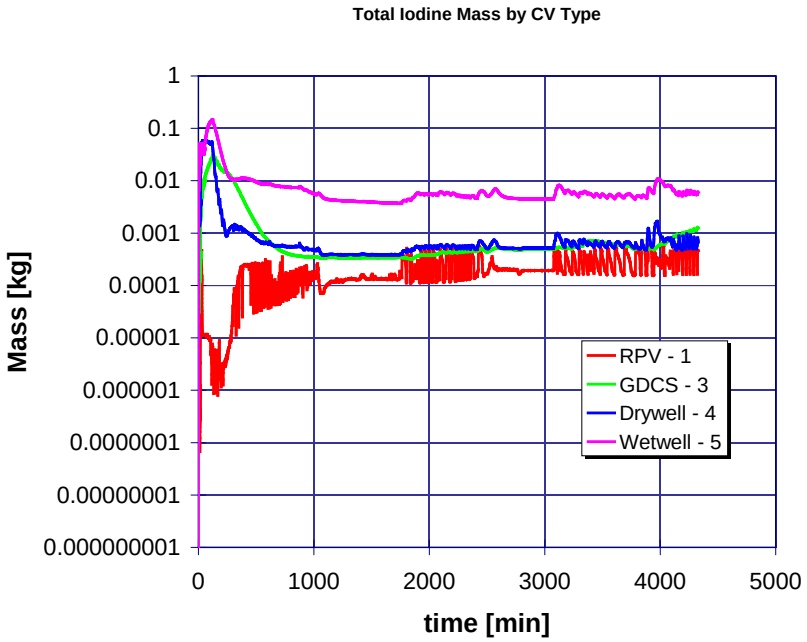

Figure 10. Total Elemental Iodine (RN Class 4) Mass by CV Type

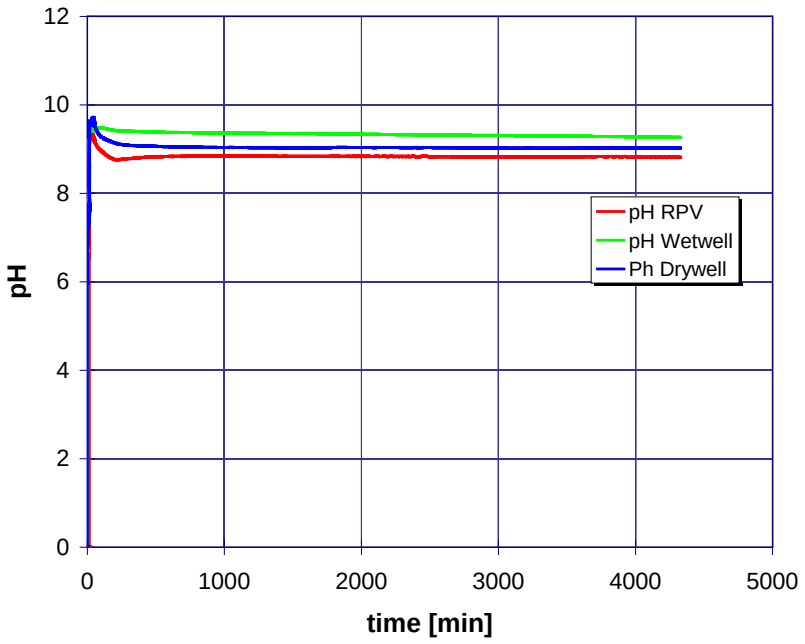

Figure 11. Pool pH

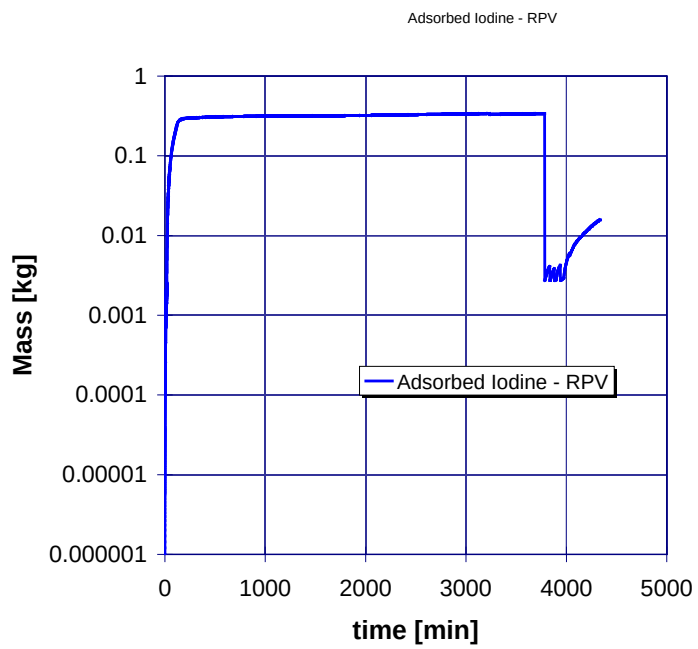

Figure 12. Mass of Iodine Adsorbed on the Walls of the RPV

Table 1 summarizes some major chemistry indicators of interest at the end of the problem run (2.6 x 10^5 sec). As can be seen, comparing the total I^- mass in the pools versus that in the atmospheres, most of the iodine is bound up in the pools as I^- and with very little in the atmosphere. The pools and atmospheres, however, do not appear to be in equilibrium, as would be given by the partition coefficient (PC).

Comparing the row labeled "Equil Air I2 (kM/m3)", the molar concentration of I_2 expected in the atmosphere at equilibrium for the given pool concentration, given by the partition coefficient, to that actually in the atmosphere, we can see that the atmosphere molar iodine concentrations are much different than expected for equilibrium.

For reference, the partition coefficient is defined as

$$PC = \frac{x_{I2aq}(pool)}{x_{I2}(air)} = f(T)$$

Looking at the RPV column, the air concentration is about 10x less than expected. There is a large amount (0.34 kg) of iodine adsorbed on the heat structures (HS) in the RPV until it mostly washes off at 3780 min, as seen in Figure 12. This is apparently the other factor in the pool-air iodine equilibrium in the RPV.

Looking at the wetwell, the air concentration is higher than would be expected at equilibrium by a factor of 200x and, since these are wet wall surfaces, there is no adsorbed iodine on the walls. The pool is absorbing the excess iodine from the air in the wetwell. The wetwell atmosphere in fact has most of the iodine in the wetwell, although the actual concentration is similar to that in the RPV. This suggests that the iodine may have been convected to the wetwell from the RPV.

Table 1. Data Summary for ESBWR MELCOR Run

	Air-RPV	Pool-RPV	Total-RPV	Air-Wetwell	Pool-Wetwell	Total-Wetwell	Air-Drywell	Pool-Drywell	Total-Drywell
I2 Mass (kg)	1.24E-06	1.76E-04	3.60E-04	5.90E-03	4.62E-07	5.90E-03	6.70E-04	3.30E-09	6.70E-04
Volume (m^3)	242	541	761	4445	5353	9790	6216	890	7106
Temperature (K)	420	420		360	353		419		
pH		8.8			9.3			9	
xI2 (kM/m^3)	2.02E-11	1.28E-09		5.23E-09	3.40E-13		4.25E-10	1.46E-14	
MI2 (kM)	4.88E-09	6.92E-07	1.42E-06	2.32E-05	1.82E-09	2.32E-05	2.64E-06	1.30E-11	2.64E-06
MWI2 (kg/kM)	253.9								
PC			6			14			6
Equil Air I2 (kM/m^3)	2.13E-10			2.43E-14			2.43E-15		
I- Mass (kg)		3.59			2.08			2.05	
MI- (kM)		0.02826772			0.016377953			0.016142	
MWI- (kg/kM)	127								

3.1 Iodine absorption in the PCCS

First, let us examine the hydraulic behavior of the PCCS/A, looking at the inlet and outlet plenums of PCCS/A: steam-air comes into the inlet plenum, which is entirely full of vapor; the steam condenses, leading to a pool in the outlet plenum, which is almost constant in height. The pool height is regulated by the hydrostatic pressure drop to the GDCS pool. The water drains through the three drains which is represented as a single flowpath in the model since all three have the same flows. The air and remaining steam exit through the vent, at first, but the vent flow quickly goes to zero. This is due to the vent outlet being under about 2 m of water in the drywell pool, so enough pressure difference must exist to overcome this hydrostatic head in order for the vent to work.

Molecular iodine (RN class 4) comes into the PCCS in the steam-air mixture as a vapor. When the steam condenses, the iodine stays in the atmosphere phase (now air). There is no evidence that there is any iodine at all in the water in the PCCS, either as vapor or aerosol. There is also no iodine as aerosol in the atmosphere. The net result is that the iodine concentration increases in the atmosphere phase of the outlet plenum.

The reason for this behavior is that, although there are many deposition mechanisms and transport mechanisms in MELCOR for aerosols, they are all for aerosols. In this case, the iodine vapor is not condensing into an aerosol, nor is it condensing on the PCCS heat structures. This is because the iodine partial pressure is actually very low, meaning it will condense at a low temperature, whereas the atmosphere and water temperatures are pretty high.

In reality, iodine vapor in contact with water will equilibrate by dissolving some of the iodine into the water. However, this equilibration mechanism is not modeled in MELCOR, except as part of the IPM, which is not turned on in the PCCS. So the iodine vapor stays in the atmosphere phase. This modeling deficiency will be corrected in planned revisions to the IPM.

3.2 Acid Generation

Generation of hydrochloric and nitric acids can potentially lower the pH in pools. The amounts of acid in this problem are shown in Figure 13. In the IPM, nitric acid is generated by radiolysis in the atmosphere, mostly in the wetwell (see Figure 14). Some nitric acid is generated early in the problem in the drywell. The drywell air is soon displaced by steam and is convected to the wetwell. Air in the atmosphere, hence nitrogen, is required to generate nitric acid, so there is no nitric acid generation in the RPV, where the atmosphere is entirely steam. The amount of nitric acid calculated to have been produced at 3 days was 2.26 kg, or 36 moles, comparable to the 114 moles at 30 days in the GE report [VTT, 2007].

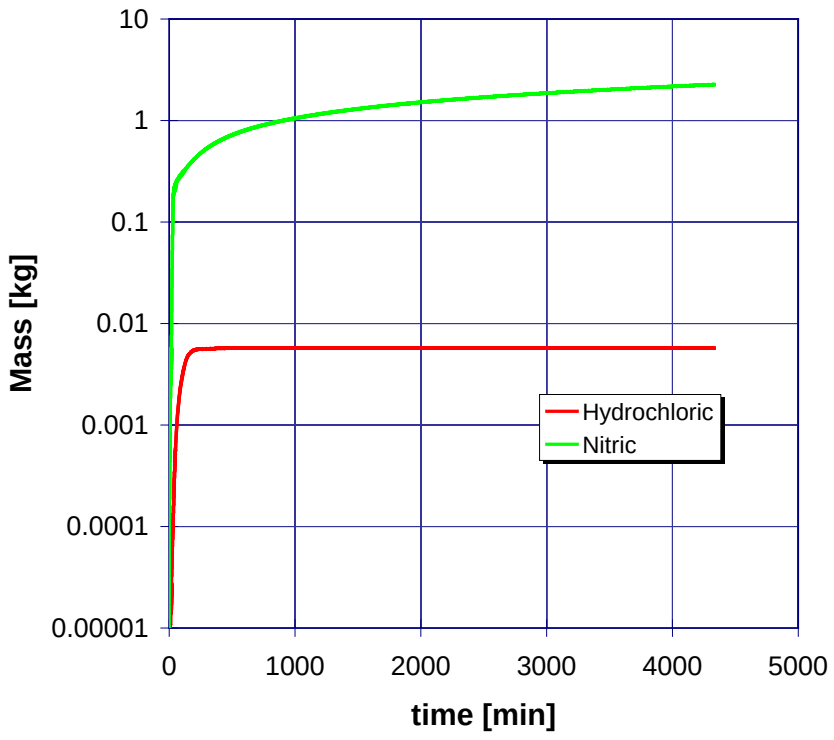

Figure 13. Masses of Nitric and Hydrochloric Acid in the Problem

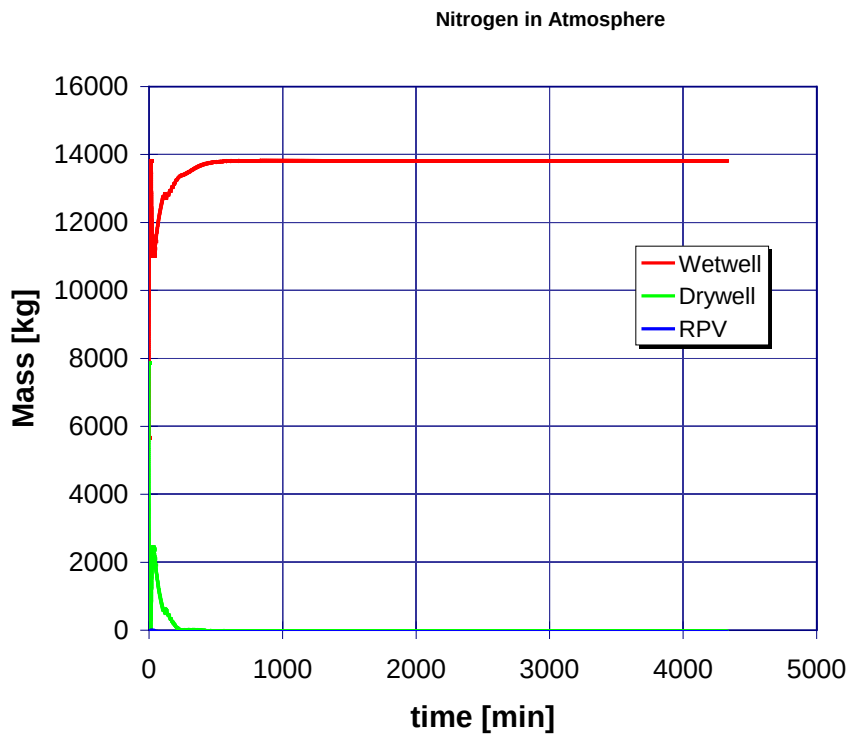

Figure 14. Nitrogen Mass in Atmosphere of CVs

Hydrogen chloride (HCl) can be evolved from plastics used in cable insulation. When this gas contacts water, it forms hydrochloric acid. In this problem, cable is only in the drywell, so hydrochloric acid comes from there. The amount evolved, 0.006 kg or 0.0016 moles, is much less than that reported in the ESBWR report (5547 moles at 30 days) [VTT , 2007]; so much so that an error in the MELCOR model implementation was suspected. It was decided that the HCl generation from source radiation dose in Mrad/hr was incorrectly calculated from the radionuclide power in W, resulting in much less dose than there should be (roughly, a factor of 1000)[2]. Another factor contributing to the discrepancy is that the air originally in the drywell was swept out by steam, probably because the PCCS vent is not working. The radionuclides in this problem were injected into the atmosphere in the drywell, and were also swept out. The radiation source in the drywell atmosphere is thus reduced to such an extent that soon after the start of the problem, so the HCl production was reduced to almost zero.

[2] There was not sufficient time to correct this error under the scope and schedule of the project. It should be correct in any follow-on work.

4 CONSIDERATIONS ON THE POOL MODELING

The results suggest several things about the modeling. One consideration is the radiation dose used in the iodine pool model. The radiation dose is tied to the decay heat, hence varies as the radionuclides move through the system. The radionuclides in this problem are those that escaped to the containment. The RPV is being simulated with HS and heat sources, and since a major portion of the radionuclides can be expected to be retained in the RPV, it is probably more realistic to simulate the radiation level in the RPV as proportional to the heat source rather than to the decay heat produced by the radionuclides that reenter the RPV. Note that the IPM does not allow specifying both as the dose type in the input.

Another thought concerns the way that the iodine pool model redistributes iodine and cesium. The model does class transfers, which is resulting here in transfer of iodine from CsI (RN class 16), the major source of iodine in this problem, to the I_2 (RN class 4) class and to the I^- class (RN class 22). Cs remaining is transferred from CsI (RN class 16) to Cs (RN class 2). However, the reverse does not happen – Cs from RN class 2 cannot be transferred back in conjunction with I^- s from RN class 22 into RN class 16. This is an artifact of the IPM which could be corrected in the future.

As noted, the nitric acid produced is similar to that in the GE ESBWR report [VTT, 2007]. The hydrochloric acid production, however, is much less. This suggests an error in the way the HCl source is implemented. The source term is in fact the same as in the GE report [Beahm, *et al*., 1992], where it was quoted as 1×10^{-4} mol/kg-cable/Mrad. The actual calculations in Beahm were carried out using the radionuclide power in MeV/s, so “Mrad”, an absorbed dose unit, has to be inferred from the power as absorbed in something. The “something” apparently is the containment atmosphere, although this is not spelled out. This appears to be the source of the discrepancy, as the conversion in MELCOR from radionuclide power in W to Mrad/hr assumes absorption in plastic does not match the convention used by Beahm.

It was noted that iodine was not being transferred from the atmosphere to the water in the PCCS, although this would occur in reality. This is due to the iodine in the present problem being in vapor form, and there is no model in MELCOR, outside of the IPM, to transfer vapor to water (or walls) besides condensation. This should be remedied in a future task.

Calculation of the problem using the IPM in three CVs takes a considerable amount of computing time. In this problem, nearly 90% of the total CPU time was taken by the RN package. It would be useful to improve the calculation time by using a faster solution method for the aqueous chemistry in a future task.

5 DISCUSSION AND CONCLUSIONS OF THE ORGINAL MARCH 2008 ANALYSIS

The pH in the three pools where the IPM was used are all basic through the three days the problem was run. This means that very little molecular iodine is present in the atmosphere, with the majority being in the pools as I-. Buffering in the pools is provided both by the CsOH radionuclide added and by the sodium pentaborate buffer added in the accumulator water. This buffering lasts for about 20 days, according to the GE report.

The amount of nitric acid generated, as noted, is comparable to that in the GE report. The amount of hydrochloric acid, although artificially low due to the Mrad-to-Watts conversion problem in MELCOR, is also going to be lower because of the displacement of the drywell air (and contained radionuclides) by steam. This effect was probably not considered in the GE report.

As noted, the PCCS does not transfer atmospheric iodine to the condensed water in MELCOR modeling, although this would occur in reality. This effect, if included, would lower the amount of atmospheric iodine even further, although the major factor in lowering the atmospheric iodine amount is the pool pH.

6 UPDATES TO THE ORIGINAL MARCH 2008 ANALYSIS

The initial March 2008 analysis evaluated an accident sequence different from any of those evaluated in the GE [VTT, 2007] or SNL [Kalinich, 2008] aerosol deposition evaluations. Also, the buffer used in the ESBWR (sodium pentaborate) was not available as an option in the MELCOR code version used for the March 2008 calculations, nor was there a mechanistic model to account for removal of iodine vapor by water vapor condensation in the PCCS heat exchangers. To address these issues, changes were made to the ESBWR model as well as the MELCOR code.

6.1 Model and Code Changes

The following changes were made to the final March 2008 work:

- The model was ported from MELCOR 1.8.6 to MELCOR 2.1. This port was done due to it being simpler to modify MELCOR 2.1 source code than MELCOR 1.8.6 source code.

- Changes were implemented in the MELCOR 2.1 code and in the model to allow sodium pentaborate as a buffer. This allows the model to be consistent with the buffer used in the ESBWR.

- The PCCS was simplified from two lumped trains of three PCCS heat exchangers to a single lumped train of six PCCS heat exchangers. This treatment is identical to that used in previous ESBWR aerosol deposition modeling work [Kalinich, 2008] and was implemented in an attempt to simplify the model and improve the speed of its execution.

- The PCCS pool tanks were lumped into a single equivalent control volume. Moreover, control logic was added to maintain the level in the single lumped tank such that the heat exchangers were never uncovered. The change was implemented to simplify the model and to preclude late-time pressurization of the containment.

- The accident sequence in the model was changed to the bottom drain line break with the ADS operational and restoration of adequate core cooling (i.e., flow from GDCS tanks to the RPV) after 6083 s (1.69 hr) [Kalinich, 2008].

As noted in Section 4, there is currently no model in MELCOR, other than condensation, for the removal of iodine vapor to the PCCS heat exchanger walls. In lieu of a mechanistic model, a simple parametric model was implemented via control functions. This model removes an amount of iodine vapor from the heat exchanger vapor space proportionate to the mass of iodine vapor, with the removal rate based on the magnitude of a user-specified removal coefficient.

$$\dot{m}_{removed} = \lambda m$$

where

$\dot{m}_{removed}$ - mass of iodine vapor removed from the heat exchanger vapor space
λ - rate of iodine vapor removal from the heat exchanger vapor space
m - mass of iodine vapor in the heat exchanger vapor space

This removed iodine vapor mass is then placed into the GDCS pools.

By varying the removal coefficient, the effect of iodine vapor removal by the PCCS on the overall mass of iodine in the containment vapor space can be evaluated.

6.2 Results

A parametric study was conducted with the model. The PCCS removal coefficient was set equal to 1 1/hr, 10 1/hr, and 100 1/hr. A case was also run with the removal coefficient set equal to 0 1/hr (i.e., no iodine vapor removal by the PCCS heat exchangers). Note that due to the computing time taken by the RN package to execute the IPM, the studies were limited to a duration of 7 days (168 hr).

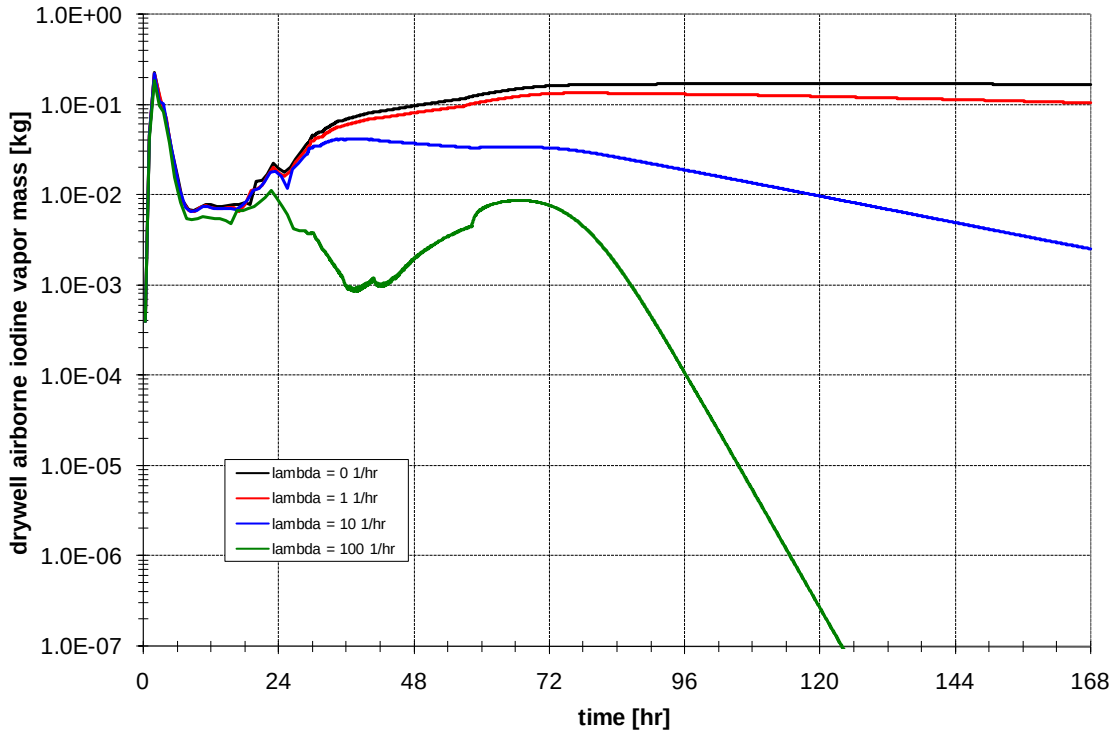

Figure 15. Drywell Iodine Vapor Mass as a Function of PCCS Removal Coefficient

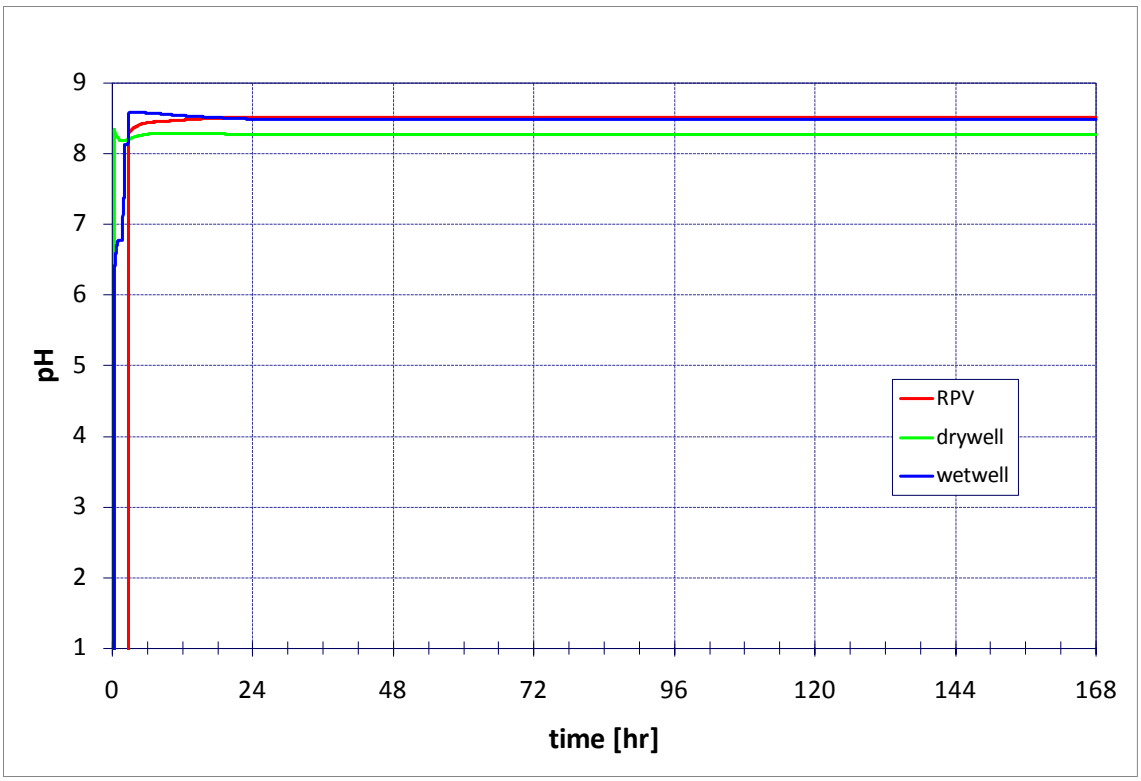

Figure 16. Pool pH

As seen in Figure 15, as the removal coefficient is increased the amount of iodine vapor in the drywell vapor space decreased. Comparing the case of no iodine vapor removal in the PCCS (lambda = 0 1/hr) with that for a 1 1/hr PCCS removal coefficient finds about a 2x decrease in the drywell iodine vapor mass at 7 days. Increasing the removal coefficient results in higher decreases, with the 10 1/hr removal coefficient yielding about a 100x decrease, and the 100 1/hr removal coefficient resulting in a decrease of greater than six orders-of-magnitude.

Figure 16 shows the pH in the RPV, drywell, and wetwell pools. As in the previous March 2008 analysis the pH effectively remains constant once the IPM is activated.

6.3 Summary and Conclusions of the Update to the Original March 2008 Analysis

MELCOR analyses have been performed using a simplified ESBWR plant model with the IPM activated. The MELCOR code and the ESBWR model have been modified to account for the accident scenario of interest (bottom drain line break with ADS operational and restoration of adequate core cooling (i.e., flow from GDCS tanks to the RPV) after 6083 s) and the use of sodium pentaborate as the buffer in the ESBWR.

A simple parametric model was implemented to allow for iodine vapor deposition in the PCCS heat exchanger tubes due to water vapor condensation.

Due to computational time taken by the RN package to execute the IPM, the analyses were limited to a duration of 7 days.

The results of the parametric study in which the PCCS iodine vapor removal coefficient was varied from 0 1/hr (i.e., no iodine vapor removal) to 100 1/hr found that as the removal coefficient was increased the iodine vapor mass in the drywell decreased, and hence any containment leakage would result in a lower iodine vapor source term release to the environment.

The parametric model for iodine vapor deposition was used as there is currently no mechanistic model available for this deposition mechanism.

7 REFERENCES

Beahm E. C., Lorentz R. A. and Weber C. F., 1992, *Iodine Evolution and pH Control*, NUREG/CR-5950, ORNL/TM-12242, Oak Ridge National Laboratory, Oak Ridge, TN.

CONTAIN, 2003, *CONTAIN Code Qualification Report/User Guide for Auditing Design Basis BWR Calculations*, SMSAB-03-02, ML030700353.

ERI, 2005 *MELCOR 1.8.5 Modeling of ESBWR*, ERI/NRC 06-201, ERI, Washington, D.C.

General Electric Nuclear, 2007, *ESBWR Design Control Document, Tier 2, Chapter 1, Introduction and General Description of Plant, Sections 1.1 – 1.11*, 26A6642AD, Revision 4, September 2007, General Electric Nuclear, Wilmington, NC.

Kalinich D. A., 2008, *Analysis of Aerosol Deposition in the ESBWR Containment and Main Steam Lines*, SAND2008-4961, Sandia National Laboratories, Albuquerque, NM.

Soffer, L., *et al*. 1995, *Accident Source Terms for Light-Water Nuclear Power Plants*, NUREG-1465, Washington, D.C.

Tills J, 2005, *MELCOR Code Calculations for the PANDA Facility*, Sandia National Laboratories, Albuquerque, NM.

Tills J., 2007, *MELCOR DBA Containment Audit Calculations for the ESBWR Plant (Draft)*, Sandia National Laboratories, Albuquerque, NM

VTT, 2007, *Estimation and Modeling of Effective Fission Product Decontamination Factor for ESBWR Containment - Part 3*, VTT Technical Research Centre of Finland, Espoo, Finland.

DISTRIBUTION

2 Jay Lee
Mail Stop O10H4
U.S. Nuclear Regulatory Commission
Washington, DC 20555

1	MS0748	Randall Gauntt	6762
5	MS0748	Donald A. Kalinich	6762

1	MS0899	Technical Library	9536 (electronic copy)

Sandia National Laboratories