SANDIA REPORT
SAND2001-2505
Unlimited Release
Printed August 2001

The Design-to-Analysis Process at Sandia National Laboratories

Observations and Recommendations

Shawn P. Burns, Randy J. Harrison, and Dean Dobranich

Prepared by
Sandia National Laboratories
Albuquerque, New Mexico 87185 and Livermore, California 94550

Sandia is a multiprogram laboratory operated by Sandia Corporation,
a Lockheed Martin Company, for the United States Department of
Energy under Contract DE-AC04-94AL85000.

Approved for public release; further dissemination unlimited.

Sandia National Laboratories

Issued by Sandia National Laboratories, operated for the United States Department of Energy by Sandia Corporation.

NOTICE: This report was prepared as an account of work sponsored by an agency of the United States Government. Neither the United States Government, nor any agency thereof, nor any of their employees, nor any of their contractors, subcontractors, or their employees, make any warranty, express or implied, or assume any legal liability or responsibility for the accuracy, completeness, or usefulness of any information, apparatus, product, or process disclosed, or represent that its use would not infringe privately owned rights. Reference herein to any specific commercial product, process, or service by trade name, trademark, manufacturer, or otherwise, does not necessarily constitute or imply its endorsement, recommendation, or favoring by the United States Government, any agency thereof, or any of their contractors or subcontractors. The views and opinions expressed herein do not necessarily state or reflect those of the United States Government, any agency thereof, or any of their contractors.

Printed in the United States of America. This report has been reproduced directly from the best available copy.

Available to DOE and DOE contractors from
U.S. Department of Energy
Office of Scientific and Technical Information
P.O. Box 62
Oak Ridge, TN 37831

Telephone: (865)576-8401
Facsimile: (865)576-5728
E-Mail: reports@adonis.osti.gov
Online ordering: http://www.doe.gov/bridge

Available to the public from
U.S. Department of Commerce
National Technical Information Service
5285 Port Royal Rd
Springfield, VA 22161

Telephone: (800)553-6847
Facsimile: (703)605-6900
E-Mail: orders@ntis.fedworld.gov
Online order: http://www.ntis.gov/ordering.htm

SAND2001-2505
Unlimited Release
Printed August 2001

The Design-to-Analysis Process at Sandia National Laboratories

Observations and Recommendations

Shawn P. Burns
Thermal/Fluid Computational Engineering Sciences

Randy J. Harrison
W76-1 Life Extension Department

Dean Dobranich
Thermal and Reactive Processes

Sandia National Laboratories
P.O. Box 5800
Albuquerque, New Mexico 87185-0836

Abstract

The efficiency of the design-to-analysis process for translating solid-model-based design data to computational analysis model data plays a central role in the application of computational analysis to engineering design and certification. A review of the literature from within Sandia as well as from industry shows that the design-to-analysis process involves a number of complex organizational and technological issues. This study focuses on the design-to-analysis process from a business process standpoint and is intended to generate discussion regarding this important issue. Observations obtained from Sandia staff member and management interviews suggest that the current Sandia design-to-analysis process is not mature and that this cross-organizational issue requires committed high-level ownership. A key recommendation of the study is that additional resources should be provided to the computer aided design organizations to support design-to-analysis. A robust community of practice is also needed to continuously improve the design-to-analysis process and to provide a corporate perspective.

Acknowledgements

The authors are grateful for the help of the Sandia staff members who contributed their input to this study. The frank observations of these staff members were instrumental in constructing this report. The authors also acknowledge the Sandia Weapon Intern Program for providing the motivation and support necessary for this study.

Table of Contents

SUMMARY ..... **IV**

INTRODUCTION **1**

BACKGROUND AND LITERATURE REVIEW 1
SCOPE 3
METHODS AND MATERIALS 3

STAFF MEMBER OBSERVATIONS **4**

ANALYSIS HAS NOT BEEN A HISTORICAL CUSTOMER OF CAD MODELERS 4
A PUSH-BUTTON PROCESS IS UNLIKELY GIVEN THE CURRENT ENVIRONMENT 5
INTEGRATION BETWEEN CAD AND ANALYSIS REQUIRES COMMUNICATION 7
INFRASTRUCTURE IMPROVEMENTS ARE NEEDED 8
CULTURAL BIASES NEED TO BE OVERCOME 9

CONCLUSIONS **10**

RECOMMENDATIONS **11**

ANALYSIS HAS NOT BEEN A HISTORICAL CUSTOMER OF CAD MODELERS 11
A PUSH-BUTTON PROCESS IS UNLIKELY GIVEN THE CURRENT ENVIRONMENT 12
INTEGRATION BETWEEN CAD AND ANALYSIS REQUIRES COMMUNICATION 13
INFRASTRUCTURE IMPROVEMENTS ARE NEEDED 14
CULTURAL BIASES NEED TO BE OVERCOME 15

DO-NOTHING OPTION **17**

APPENDIX A - SUMMARY OF RECOMMENDATIONS **18**

APPENDIX B - PRO/ENGINEER DESIGN-TO-ANALYSIS RECOMMENDATIONS **20**

APPENDIX C - DESIGN-TO-ANALYSIS PROBLEM DEFINITION **22**

APPENDIX D - INTERVIEW GUIDE **23**

APPENDIX E - SUCCESS FACTORS FOR COMMUNITIES OF PRACTICE **25**

APPENDIX F - PRODUCT INFORMATION MANAGEMENT SYSTEM **26**

REFERENCES **27**

Summary

The following report provides a review of the design-to-analysis process at Sandia from a business process viewpoint. The study finds that the design-to-analysis process at Sandia is not mature and committed high-level management attention will be required to develop an efficient process that addresses the needs of the corporation rather than focusing on the needs of particular organizations. Improvements in the current design-to-analysis process will require significant resources and a high degree of coordination between Sandia organizations. Specific recommendations include:

- Staff resources within the computer aided design geometric modeling organizations need to be increased to fully support analysis as a customer in addition to manufacturing.
- Infrastructure and production computing improvements are needed to support a production level design-to-analysis process.
- An authoritative coordinator should be identified and given the mandate and funding necessary to provide design-to-analysis process improvements.
- Relevant projects that encourage the application of computational analysis to engineering design should be fostered at the program level.

A complete summary of specific observations and recommendations is provided in Appendix A.

The efficiency of the design-to-analysis process is a limiting factor in determining how well technology developed by the Accelerated Strategic Computing Initiative and associated programs can be brought to bear on Defense Program applications. Forgoing improvements in the current design-to-analysis process will limit use of this technology to applications with long time horizons and may preclude its use in rapidly evolving design applications. A committed effort will be needed, however, to develop a coordinated, production-level design-to-analysis strategy at the corporate level.

Introduction

What is the process for translating solid-model-based engineering design data to computational analysis model data at Sandia National Laboratories? How can the efficiency of this process be improved? These questions received increased attention in the late 1990's and continue to receive attention in the early 2000's as the application of computational simulation to support weapon development activities is emphasized within the Nuclear Weapons Complex (Crandall and Beck, 2000). Advances in phenomenological understanding, algorithms, and the speed and capacity of computational hardware have increased the power of computational analysis as a tool for engineering development, certification, and surveillance. How well this technology can be brought to bear on rapidly evolving mechanical designs is highly dependent on the efficiency of the design-to-analysis process. This study has been undertaken to evaluate the design-to-analysis process at Sandia from a business process standpoint and to provide recommendations for how the current process might be improved in the future.

Background and Literature Review

The seamless use of electronic design representations from development through manufacturing has been the ideal since the introduction of the first Computer Aided Design (CAD) software in the late 1970s. This ideal has yet to be realized as incompatible data representations make the exchange of data between proprietary software packages a major source of error. A recent study sponsored by the National Institute of Standards and Technology (Brunnermeier, 1999) estimates that the U.S. automotive supply chain spends approximately one billion dollars a year addressing interoperability concerns between different computer aided design software packages. "The majority of these costs are attributable to the time and resources spent correcting and recreating data files that are not useable by those receiving files." (Brunnermeier, 1999, pg. ES-5). The magnitude of these costs is not as significant as the fact that the ideal of seamless use of electronic design data has yet to be realized even in the U.S. Automotive Industry. Domm and Underwood (1999) also observed …

Within the Nuclear Weapons Complex, the need for efficient data exchange was recognized in the mid 1980s. The Interagency Information Study (Sharp, et al., 1988), inaugurated by the Department of Energy Computer Integrated Manufacturing Program Office, sought to analyze the interagency information needs within the Complex. This study developed a detailed business model for the Nuclear Weapons Complex as it existed at that time, and defined how engineering, financial, and scheduling information was transferred between facilities within the complex. Understanding what data is needed by each activity within the Complex was an important step in developing a data transfer infrastructure.

At the time of the Interagency Information Study, each facility within the Nuclear Weapons Complex employed a different set of CAD and computer aided manufacturing software applications. It was recognized that maintaining interoperability between these applications would be prohibitively expensive. Therefore, hardcopies of two-dimensional drawing sets were used as the standard for exchanging manufacturing

product definition data between facilities. Drawing sets would be generated by a given facility and entered by hand into the CAD format used by other facilities.

The desire for improved quality and manufacturability of electromechanical components drove Sandia National Laboratories and the Kansas City Plant to standardize on a single computer aided design package in the early 1990s. A selection committee chose Pro/Engineer marketed by Parametric Technology Corporation of Needham, Massachusetts as the standard package to be used by these facilities. By the mid 1990s the remaining facilities in the nuclear weapons complex had also standardized on Pro/Engineer.

Standardization on a single computer aided design package, however, did not eliminate interoperability problems between models. The flexibility and generality of the Pro/Engineer software, indeed of most CAD packages, allowed a given geometry to be constructed in equivalent but incompatible ways by different designers. Additionally, emphasis was placed on reusing solid model data for multiple manufacturing applications. The Kansas City Plant identified inadequacies in the geometric fidelity of solid model data when attempting to use these models for tooling and inspection purposes. Many of these design-to-manufacturing issues have parallels in the design-to-analysis process.

During the late 1990s, increasing emphasis was placed on using CAD solid model geometry for developing analysis models as well as for manufacturing purposes. Kistler (1997) conducted a study of the process of using Pro/Engineer solid models to develop finite element meshes for computational analysis. Kistler's study included a number of geometries typically found in weapon design and provided a list of Pro/Engineer specific recommendations for improving the design-to-analysis process (cf. Appendix B). These and other best practices recommendations, however, apply only to solid models developed since their implementation. Many existing solid models of weapon components were generated in the late 1980's and early 1990's and were not developed with the needs of possible analysis applications in mind.

Three years after the Kistler study, Dobranich, et al. (2000) and Dobranich and Dempsey (2001) evaluated several solid model and mesh generation packages as well as several translation and neutral file formats during the development of a thermal analysis model to support a particular Defense Program application. These studies developed a new, highly detailed, meshable CAD geometry model of a complex mechanical assembly based on the original design drawings. Dobranich, et al. selected the SolidWorks solid modeling package marketed by SolidWorks Corporation of Concord, Massachusetts for this work rather than the Nuclear Weapon Complex standard Pro/Engineer package. A key factor in this selection was the close association of the COSMOS/Works mesh generation package, marketed by Structural Research and Analysis Corporation of Los Angeles, California, with the SolidWorks package. As will be discussed later, errors introduced during the transfer of data between the CAD geometry model and mesh generation software are a significant contributor to the overall design-to-analysis cycle time. Dobranich and Dempsey, as well as Gross and Dempsey (2001), noted that close coupling between the CAD geometry modeling and mesh generation software greatly reduces the occurrence of data transfer errors.

Most recently, Dobranich and Metzinger (2001) conducted a risk analysis for the application of computational analysis to support specific design activities at Sandia. This study identified the design-to-analysis process as an issue of highest concern for the application of both thermal and structural analysis capabilities to support design and certification efforts. Investment in the design-to-analysis process was further identified as offering the greatest potential for improving analysis support for design at Sandia.

Scope

This study focuses on design-to-analysis as a business process for the development of computational analysis models from solid model data as defined by Ames, et al. (1996) (cf. Appendix C). While this study is concerned about the requirements of different computational analysis tools, it is not concerned about the details of the analysis or how analysis feeds back to influence design. Similarly, while technology certainly influences the design-to-analysis process, this is not intended to be a technology study. Where appropriate, different computational tools will be discussed but it is not the intent of this study to provide an analysis or critical review of these tools. Finally, this study makes several recommendations for how the design-to-analysis process might be improved. These recommendations are intended to inspire discussion regarding the improvement of this important process. It is expected that much more in-depth study will be required to develop a production level design-to-analysis process.

Methods and Materials

The information presented in this report was obtained predominantly through interviews with Sandia National Laboratories staff members and managers in the design and analysis organizations. An interview guide was given to each staff member and manager (cf. Appendix D) to provide a framework for the interview. Observations and recommendations obtained from the interviews were condensed and are summarized in the main body of this report. In total, 37 staff members and managers were interviewed from eight centers including the principle engineering, design, and analysis organizations within Sandia. The summarized comments and recommendations were presented to the entire group of interviewees for verification.

Information gathered from staff member interviews was supplemented by technical reports and white papers published within Sandia as well as the Nuclear Weapons Complex and industry. Technical texts on specific topics including business process improvement, constructive solid geometry, and boundary representation geometry were also consulted for this work (Hoffmann, 1989, Mortenson, 1997). The entire list of citations used in developing this report is included in the bibliography.

Where appropriate, software tutorials were consulted to obtain familiarity with some of the software packages used in the design-to-analysis process at Sandia. In general, these software packages are too complex to obtain a complete understanding during the period of this study. Nevertheless, hands-on experience proved useful for understanding some of the observations made during the staff member interviews.

Staff Member Observations

The following sections summarize the principle observations made by staff members during the interview process. The observations have been organized into five broad categories. This organization is by no means unique but is felt by the authors to give the most concise view of the range of staff member comments. Specific staff member comments are paraphrased here with additional supporting material drawn from literature sources. It should be noted that these observations have not been substantiated by any formal investigation, instead they represent commonly held staff perceptions.

Analysis has not been a historical customer of CAD modelers

Historically at Sandia, and indeed throughout industry, the principle objective of CAD has been to provide support for manufacturing. The geometric models developed by the CAD organizations at Sandia are generally used to provide the design definition used by Sandia machine shops and manufacturing plants within the Nuclear Weapons Complex. Certainly CAD models have been used in the past for the development of analysis models but this use has been fairly limited and the demands of a production level design-to-analysis process at Sandia will far exceed any historical use of CAD models to support analysis model development. As a result of this historical concentration on manufacturing, CAD modelers at Sandia have not had the opportunity to become familiar with the needs of analysis model development and the CAD organizations themselves may not have the staff resources necessary to support new analysis customers.

In manufacturing, CAD geometric models may be used for machine tool path analysis and numerically controlled machining and inspection equipment. These applications require that the CAD geometry model provide a certain level of geometric fidelity and accuracy. Analysis model development, particularly mesh generation, typically requires a level of fidelity two orders of magnitude greater than do these manufacturing applications[1]. This may require that the CAD geometric model is generated using a much tighter tolerance than that required by manufacturing applications. Tighter tolerances will result in larger and more cumbersome CAD geometry files which may hinder their use for other applications.

In addition to geometric fidelity, analysis models often require a more flexible geometric representation than manufacturing models. For example, depending on the needs of a given analysis, the CAD geometry model for use in analysis model development may need to be constructed to simplify the suppression of small features (Kistler, 1997). Small features not only increase the overall computational mesh size[2] but also may not be analyzeable due to the lack of adequate physical models, for example, the thermal contact resistance between the threads of a bolt and a bolt-hole. Although it

[1] Tolerances on the order of 10^{-4} of the mean part dimension are typical for manufacturing CAD geometry models. Mesh generation software typically operates with tolerances of $O(10^{-6})$ of the mean part dimension or smaller.

[2] A coarse tetrahedral mesh of a unit cube may require 12 tetrahedra. A coarse terahedral mesh of the same cube with rounded corners may require 52 tetrahedra., a 433% increase.

may be possible to mesh such small features, an adequate model for the thermal contact resistance between the threads may not exist. Such features may be suppressed in a given analysis to allow the use of a limiting assumption, such as zero thermal resistance, to represent the contact between the bolted components

It is not possible to provide a comprehensive list of all analysis model requirements relative to CAD geometry model data. The needs of an analysis model constantly change and evolve depending on the objectives of a given analysis and the capabilities of analysis software. As a result, the development of an analysis model from CAD geometry model data will necessarily involve communication and iteration between analysts and CAD modelers just as there currently is between manufacturing engineers and CAD modelers. In addition, a production level design-to-analysis process will result in a need to reuse CAD geometry data for different applications (Technical Business Practice 307). These applications will often place contradictory and sometimes incompatible requirements on the design of the CAD geometry model that will need to be resolved by the CAD modeler. The development of different CAD geometry models to satisfy incompatible requirements also results in version control and model coherence issues. The support of the analysis customer as well as increased CAD model management activities will place additional demands on the CAD organization's staff resources.

A push-button process is unlikely given the current environment

Technological issues, as well as the environment of the CAD software development industry, make the development of a general, push-button design-to-analysis process unlikely. One important factor is that mesh generation does not drive the development of CAD software technology. Furthermore, CAD software manufacturers use proprietary data formats; market pressures and competitive rivalries do not promote interoperability between these formats. Nevertheless, development of highly automated design-to-analysis tools has been demonstrated at Sandia[3] for focused applications. Extension of this experience to general applications within the Nuclear Weapons Complex may require that standardization on a single CAD software product be relaxed.

The fundamental technology underlying CAD geometry modeling is set for most practical purposes (Mills, 1998). Future advances in CAD modeling technology will likely be incremental and the development efforts of CAD software developers will be focused on the user interface needs of large industrial customers. By contrast, mesh generation is one of the most complex geometric reasoning problems yet encountered.[4] Mesh generation and analysis also represents a small fraction of the market for most CAD software developers. As a result of these factors, mesh generation issues or data transfer issues with mesh generation packages will only be resolved slowly by CAD software developers, if at all.

Currently four principal CAD products including the Nuclear Weapons Complex standard package Pro/Engineer dominate the CAD software development industry(Mills,

[3] Goodyear Cooperative Research and Development Agreement, 1993.
[4] Arlo Ames, Sandia National Laboratories, Albuquerque, New Mexico, 2001

1998). These four products[5] are followed by more than ten smaller competitors. Each of these products uses proprietary data representations that are generally incompatible. As a result, geometry errors are often introduced during the data transfer process between CAD systems or between CAD systems and neutral file formats or mesh generators.

Dobranich, et al. (2000) identified data transfer as a major source of error as is illustrated in Figure 1. Figure 1 shows the results of the transfer of a Pro/Engineer geometry model to the CUBIT mesh generator developed by Sandia National Laboratories and the COSMOS/Works mesh generator. In Figure 1, the original Pro/Engineer geometry was translated through the ACIS geometry kernel data format as well as the STEP[6] neutral format. Although CUBIT provides by far the best performance, each of the examples shown in Figure 1 will require resolution of geometric errors prior to meshing. Resolution of translation errors such as these often requires extraordinary efforts on the part of individual staff members to resolve.

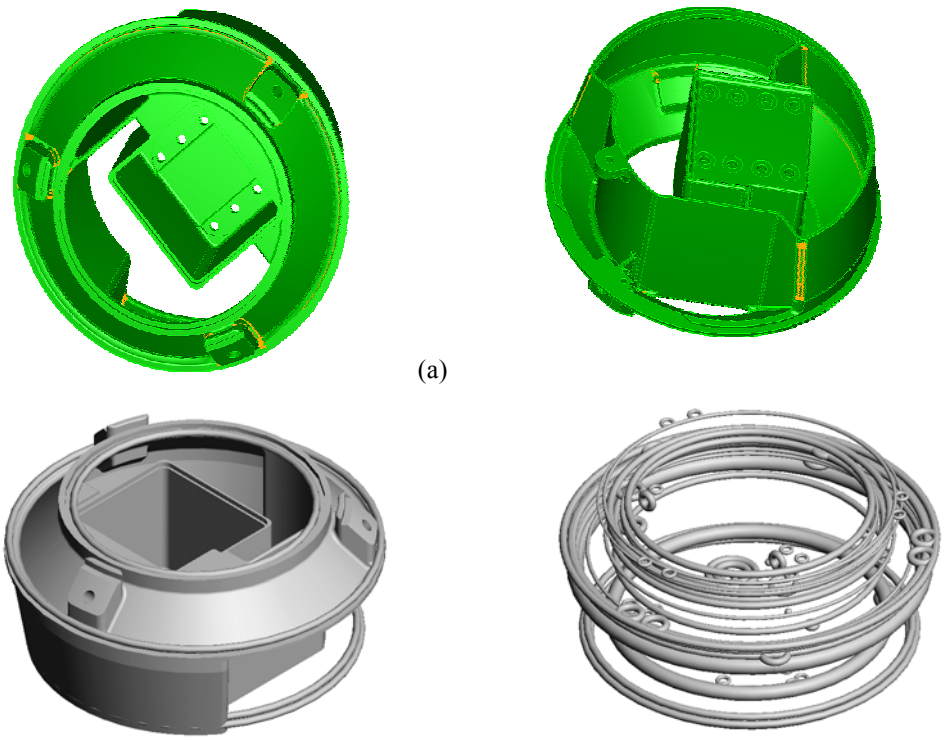

(a)

(b) (c)

FIGURE 1 - Pro/Engineer data transfer examples, (a) to CUBIT through ACIS (highlighted geometry errors remain after automatic healing in CUBIT), (b) to COSMOS/Works through ACIS, (c) to COSMOS/Works through STEP.

The examples shown in Figure 1 illustrate the difficulties faced in developing analysis models from CAD geometry model data using even recently developed tools and best

[5] CATIA-CADAM Solutions marketed by IBM/Dassault Systems, I-DEAS Master Series marketed by SDRC, Pro/Engineer marketed by Parametric Technology Corp., Unigraphics marketed by Unigraphics Solutions

[6] Standard for the Exchange of Product Model Data

practices. Geometric errors of the type shown in Figure 1 arise from loss or corruption of data during transfer between proprietary data representations. Brunermeier (1999) emphasizes that, even in the context of the U.S. automotive industry, CAD software developers do not have a strong incentive to promote interoperability between these data formats. Nor do they have an incentive to collaborate on the development of a neutral format such as the STEP format.

Integration between CAD and analysis requires communication

Communication between the CAD modeler and analyst plays a critical role in the development of analysis models from CAD geometry models. The role of communication has been touched on peripherally in the previous sections but it is central enough to warrant emphasis here. Best practices documentation efforts have been undertaken by a number of organizations within Sandia and the Nuclear Weapons Complex. While playing a vital role in the overall design-to-analysis process, best practices documentation has a number of limitations when applied to dynamic technological areas. Individual staff experience remains the most important factor in determining the efficiency of the design-to-analysis process. Additionally, the design-to-analysis process takes place across organizational lines requiring a method for broadly communicating changes in practices.

Kistler (1997) proposed a set of specific best practices relating to the development of finite element analysis models from Pro/Engineer geometry models (cf. Appendix B). As of this publication, similar best practice documentation may be found on the internal Sandia web site[7] as well as in external web sites.[8] Best practices serve a vital role in preserving knowledge important to an efficient design-to-analysis process and can serve as an important training resource. McDermott (2000), however, suggests that best practice documentation is not well suited to transferring tacit knowledge and may tend to become a "data junkyard" from which useful data cannot be extracted. Best practices must also be allowed to evolve to incorporate lessons learned over time but dissemination of changes may be slow. McDermott observed that professional problem solving capability lies in individual experience that may not be possible to articulate. McDermott recommends the development of communities of practice, which will be discussed in greater detail later in this report, as an adjunct to best practice documentation to provide a medium for communication between the CAD geometry modeling and analysis communities.

Both CAD geometry modeling and computational analysis involve complex tools and highly specialized skills requiring many years to develop. Although both CAD geometry modelers and analysts need to acquire better mutual understanding, it seems unrealistic to expect that either of these communities will become completely competent in both fields. Nor does it seem prudent to pursue cross-training because of the likelihood that the acquired skills will be lost due to lack of use. Therefore it should be expected that a production level design-to-analysis process will involve close coordination between CAD

---

[7] Eden Tadios Eager, et al., http://www-irn.sandia.gov/organization/div9000/mech/analysis.htm
[8] Nuclear Weapons Complex, Pro-Engineer Models Based Working Group, http://www.lanl.gov/projects/nwc-mpe

geometry modelers and analysts as an "essential aspect" (Dobranich and Dempsey, 2001, Dobranich, et al. 2000).

While emphasizing the importance of communication between CAD geometry modelers and analysts, it is important to understand that the development of the CAD geometry itself is a collaborative effort which often crosses organizational lines. As a result, communication pathways must be established in order to homogenize CAD practices in general as well as to communicate changes in CAD geometry models. Dobranich and Dempsey (2001) cited poor communication of CAD geometry model changes between CAD organizations as a significant problem in the design-to-analysis process.

Infrastructure improvements are needed

The design-to-analysis process depends on an infrastructure of computer networks, utility software applications, and databases. Since the early 1990's classified networks within Sandia have deteriorated to some extent or remained static relative to the unclassified networks. Advances in technology or lack of support have left other portions of the design-to-analysis infrastructure underdeveloped. The efficiency of the overall design-to-analysis process as well as the ability of the process to adapt to future requirement changes depends on the robustness of this infrastructure.

The use of classified computer networks at Sandia has changed significantly since the early 1990's. Since maintenance of both classified and unclassified networks is labor-and cost-intensive, many organizations concentrate support in either classified or unclassified networks depending on the nature of their work. Where unclassified computing is emphasized, classified networks tend to degenerate in terms of availability, data bandwidth, and processor power. As a result, working with classified networks in these organizations results in a significant reduction in productivity. Additionally, the process for transferring data from classified to unclassified networks may require several days to weeks depending on the availability of classification experts.

In addition to computer networks, computational analysis involves a variety of utility software applications. Database translation software and parallel mesh decomposition software are examples of utility software needed during the analysis process. Often this utility software is poorly maintained in terms of platform support and version control, making its use in a production environment problematic. Additionally, advances in analysis software capability may require the development of new production computing capabilities. Development and maintenance of utility applications to support a production computing capability requires the dedicated attention of skilled staff members (Gartling, 1997).

A production design-to-analysis process also requires analysis model management support similar to the CAD geometry model support discussed previously Depending on the analysis, results may require millions to billions of bytes of storage. To maintain the pedigree of this data the data must be uniquely identified with the CAD geometry model as well as the engineering databases used to generate the data. The analysis software version as well as that of any critical production computing software must also be

associated with the analysis results. Specialized database applications could play a vital role in providing analysis model management (Sauer, et al., 2000).

Cultural biases need to be overcome

The most passionate observations made by staff members during the interview process conducted for this study tended to center about corporate culture issues. While the authors appreciate that such observations reflect individual opinions, they also understand that individual biases can significantly hinder process improvement efforts. To minimize this effect the most consistent staff observations regarding corporate culture are summarized here. It is important to note, however, that very significant counterexamples exist to each of the observations discussed. Nevertheless, the authors contend that these statements reflect valid concerns which need to be acknowledged in any process improvement effort.

There is a general perception that there is no high level commitment to the design-to-analysis process on the part of the management team. The design-to-analysis process involves organizations that are widely separated in terms of common management. This separation raises the design-to-analysis process nearly to a corporate level issue. Management is seen as reluctant to resolve issues that arise across organizational boundaries and the overall management perspective is characterized as focused upward rather than downward.

In the computational analysis organizations[9], application is seen as having a lower priority than development activities. There is a related lack of focus on the analysis infrastructure and production computing necessary to support a production design-to-analysis process. This environment is associated with a poor reward system for application and production computing efforts. Although there is some evidence that this condition is changing, the rate of change is perceived as too slow.

Within the CAD geometry modeling organizations there is a poor focus on the range of customers for the geometric data being developed. These customers include analysis as well as other CAD geometry modeling organizations. A number of organizations within Sandia have responsibility for developing component and system-level CAD geometry models. Design practices between these organizations are not necessarily uniform resulting in interoperability problems between CAD models. These problems may include the use of standardized part libraries and may extend to the details of how the individual CAD geometry models were developed.

Finally, within the mechanical design organizations, analysis is not perceived as part of the design process. Having made this observation, it is particularly important to emphasize that there are excellent counterexamples at the project level. Nevertheless, analysis is often perceived as a consultative function rather than an integral part of the design process.

---

[9] For the purposes of this report the computational analysis organizations are defined as the organizations responsible for developing, maintaining, and running computational mechanics programs.

Conclusions

It is clear from the staff observations and individual staff experience that the current design-to-analysis process at Sandia is not mature. Past successes in the development of analysis models from CAD geometry models have been due largely to staff member heroics both in the analysis and CAD modeling communities. It also appears unlikely that a single solution, including a technological solution, is likely to significantly improve the efficiency of the current process. The development of a production-level design-to-analysis process will require organizational and cultural changes as well as increased communication and familiarity crossing organizational and discipline boundaries. Most importantly, real change in the current design-to-analysis process will require allocation of funding and resources as well as an extended high-level management commitment to process improvement.

Recommendations

The following sections provide specific recommendations intended to address each of the general staff observations discussed in previous sections. All of the staff observations involve complex corporate issues and it is unlikely that they are amenable to simple solutions. Indeed a complete evaluation of these issues would require analysis of much greater depth than is possible in a scope as limited as the current study. Nevertheless, the *principle objective* of the authors is to *raise awareness and generate discussion* around these important issues and, in that context, suggesting a course of action is appropriate.

Recommended courses of action are provided for particular groups within Sandia including analysis, CAD modeling, engineering design, and management. The precise definition of these groups is necessarily vague because roles and responsibilities are not the same in each situation. Hopefully, the discussion will provide the necessary context. The recommendations presented here are summarized in Appendix A.

Analysis has not been a historical customer of CAD modelers

At the time of this writing, responsibility for development of the principal Sandia mesh generation tool, CUBIT, lies with the Sandia computational analysis organizations. It is important for this development effort to emphasize the improvement of mesh generation and CAD geometry model interoperability. Indeed, this has been one of the mandates of the production-meshing group within the CUBIT development effort. The production-meshing group includes staff members from Pro/Engineer CAD modeling organizations and focuses on meshing issues associated with Pro/Engineer geometry. The importance of this effort should continue to be emphasized. It is also recommended that the scope of the production meshing team be expanded to include other CAD geometry modeling and mesh generation tools.

Perhaps the most important recommendation that can be made for the CAD geometry modeling organizations is the need to increase staff resources in order to support analysis as a customer. The increase in staff resources should accompany increased training to allow better understanding of analysis applications. In addition to analysis support, these resources should also be employed to provide active management of CAD geometry models for multiple applications including manufacturing and analysis. Geometry modelers should have the luxury of modifying the details of the CAD geometry model to improve the efficiency of data transfer or improve integration with other geometry models.

The increased resource and training requirements within the CAD organizations will require additional funding. It is likely that this increase in funding will be required for an extended period to allow organizations to adjust to the increased work scope. Some funding should also be directed through the analysis organizations to support specific programmatic needs.

The engineering design organizations at Sandia can be instrumental in developing relevant activities to drive the development of a production design-to-analysis process.

For example, some Defense Programs are developing model validation test units to experimentally validate computational models. Model validation test units will exercise all aspects of the design-to-analysis process. Efforts similar to the model validation test unit efforts should be actively supported and encouraged by the engineering design organizations.

A push-button process is unlikely given the current environment

The development of a push-button design-to-analysis process has been the ideal since the first development of CAD technology in the late 1970's. The current technological challenges and CAD marketing environment makes a point solution to this ideal unlikely and efforts will be required in a number of areas to improve the current process. Through a combination of efforts on the part of the analysis, CAD, and engineering design organizations, with support from the management team, it is likely that significant improvements can be made in the current process even if the ideal may not be reached.

By emphasizing the development of application-friendly features, the analysis groups may relax some of the requirements that currently exist for CAD geometry models relative to their meshability. The Accelerated Strategic Computing Initiative has already emphasized the development of high-resolution meshing and analysis capabilities that allows smaller features to be retained in the CAD geometry model prior to meshing. Tetrahedral meshing algorithms tend to be more robust than hexahedral meshing algorithms for discretizing complex CAD geometry. Unfortunately, tetrahedral elements may cause numerical difficulties for a number of analysis tools. Research that is directed at eliminating or alleviating these numerical problems might allow broader use of tetrahedral meshing algorithms. Slide line and contact algorithms have also been developed in the past to allow modeling of complex phenomena such as mechanical crush. These algorithms reduce the need for contiguous meshing between different components and simplify the meshing of complex mechanical assemblies. Further development of slide line and contact algorithms should be encouraged. In the longer term, meshless numerical algorithms such as reproducing kernel particle methods and smooth particle hydrodynamics may significantly reduce the geometric reasoning problem involved in mesh construction. Although meshless methods have been applied in some fields[10] several decades of research may still be required before these formulations can be applied as broadly as finite element and finite difference methods.

Eliminating errors resulting from data transfer from CAD geometry models to mesh generation software often involves changes in the underlying geometric model either through tighter tolerances or through modifying the details of the CAD geometry model construction. Given the complexity of CAD geometry modeling software and the specialized knowledge required for its use, it makes sense for the CAD geometry modeler to "own" the data transfer step to mesh generation software. In this way, time consuming iterations between the analyst and the CAD geometry modeler can be reduced and the development of "meshable" geometry is encouraged.

This concept of design-for-analysis can also be applied by the engineering design organizations just as the more familiar design-for-manufacturing concept has been

[10] Smooth particle hydrodynamics formulations in astrophysics applications for example.

applied for some time. In general, design features that are not important to the operation of a component and that make the component difficult to manufacture should be eliminated or altered. Analogously, irrelevant design features that make the component difficult to analyze should also be removed or altered. For example, a component with two bolt holes oriented at right angles to one another represents a configuration which is difficult to mesh automatically. Bolt holes that are parallel represent a trivial meshing problem in comparison. If the orientation of the bolt holes is irrelevant to the form, fit, function, or manufacturability of the component, then the parallel configuration should be considered.

The decision to adopt Pro/Engineer as the standard CAD software package for the Nuclear Weapons Complex was driven mostly by the needs of the manufacturing community. Dobranich, et al. (2000), as well as other analysts (Gross and Dempsey, 2001), have observed that the Pro/Engineer product may not be ideally suited to the needs of the analysis community. Additionally, efforts such as the Goodyear Cooperative Research and Development Agreement have shown that the development of highly automated design-to-analysis tools is possible for specific applications. It is possible that similar success may be achieved for some subset of the Nuclear Weapons Complex design-to-analysis needs. The management team should encourage and fund the development of focused design-to-analysis solutions as well as "out-of-the-box" efforts that are not necessarily predicated on the use of the Pro/Engineer product.

Integration between CAD and analysis requires communication

It is not possible to simply mandate improved communication between different communities, particularly if that communication crosses organizational boundaries. It is possible, however, to foster an environment in which improved communication can develop. McDermott (2000) proposed the community of practice as a model for improving communication within technical organizations (cf. Appendix E). McDermott's community of practice is more involved than a working group structure if for no other reason than it provides for the involvement of the entire community. Alternatively, Ames, et al. (1996) recommended the formation of a design-to-analysis organization. The development of a viable design-to-analysis community of practice or organization at Sandia would require direct management involvement as well as participation by both analysis and CAD geometry modeling organizations.

The most critical need for a design-to-analysis community of practice is the identification of an authoritative coordinator. This coordinator must be respected both in the CAD geometry modeling and the analysis communities. The coordinator must receive the mandate and the funding from the management team necessary to form the design-to-analysis community of practice. Additionally, an active core membership must also be formed with the core members receiving support in the form of funding for their participation. Salary support for the coordinator and the core members would be necessary as well as an adequate operational budget. Finally, participation in the design-to-analysis community of practice by rank and file staff members must be supported and recognized by the management team during performance evaluations.

Beyond the coordinator and core members, the broader design-to-analysis community of practice membership would be made up of staff members from the CAD geometry modeling and analysis organizations. Although participation in the community of practice by specific staff members would fluctuate over time, the participation of the CAD geometry modeling and analysis organizations in general would be an important factor in developing a viable design-to-analysis community of practice. Again, this participation must be encouraged and recognized by the management team.

Participation in a design-to-analysis community of practice would provide an avenue for communication and development of best practices between analysis and CAD geometry modeling staff members. Familiarity would play an important role in this communication. For this reason it is also recommended that the CAD modeling organizations develop at least a limited analysis capability. This would allow the CAD modeling organizations to better understand mesh generation and other analysis issues as well as to exercise the aspects of the design-to-analysis process for which they have responsibility. Efforts to pursue this objective have already been initiated by some CAD modeling organizations. Similarly, it is recommended that the analysis organizations develop and support a limited CAD modeling capability. This capability would again improve understanding and would also provide a backup CAD modeling capability to support analysis needs. Acquisition of this capability has also begun in the use of the Solidworks product in the analysis organizations.

Infrastructure improvements are needed

Addressing the detailed infrastructure needs of the design-to-analysis process necessarily falls to the analysis and CAD geometry modeling organizations. These detailed needs include support of the production computing environment and engineering databases necessary for the smooth operation of the overall design-to-analysis process. At the same time, the corporate management team must address broader infrastructure and organizational issues. These broader issues include classification and computer network issues but also include, as always, providing sufficient financial support to the analysis and CAD geometry modeling organizations to address their infrastructure needs.

Gartling, et al. (1997) recommended that a group of individuals with appropriate skills and interests be " … tasked with the development, acquisition, maintenance, and support of a production meshing environment." The authors would expand this recommendation to include support of a production design-to-analysis process. This support would include the translators and utility application software necessary to the design-to-analysis process discussed previously and by (Ames, 1996) (cf. Appendix C, #9). This group should reside within the analysis organizations in order to respond to the needs of code developers and analysts. Furthermore, this group should be encouraged and rewarded on par with analysis code development efforts.

In addition to production computing, specialized databases will be needed to archive the variety of artifacts associated with computational analysis (Sauer, et al., 2000). Although analysis model management databases may fall slightly outside the scope of this study, their use is worth mentioning here because they provide some of the resources necessary for establishing the pedigree of analysis model data. An analysis model

management system provides an important link between the computational grid used for an analysis and the CAD geometric model used to generate that mesh.

Other databases necessary for the design-to-analysis process include material property databases. Maintenance of material property databases has long been an issue not only for analysis but also for determination of mass properties[11] in support of design. Standardization of parts databases has also been an issue for interoperability of CAD geometry models generated by different organizations. It is not clear that the maintenance of all engineering databases fits comfortably within the CAD geometry modeling organizations. However, the CAD geometry modeling organizations may hold the most central position relative to where engineering data is developed and where it is ultimately used. For example, material specifications must be included in the CAD geometry model to support analysis model development. However, the tools necessary to automate the transfer of specific material properties from the material property database to the analysis input file might fall more naturally in the production computing support organization discussed previously.

Kistler (1997) as well as other best practices documents recommends the use of geometry checking tools to provide verification checks for geometry models. The Pro/Engineer product provides an internal geometry checking tool and a number of external proprietary tools are commonly employed. It is recommended that research be conducted into integrating this type of geometry checking directly into the CAD Technology Model Management systems that are currently part of the overall Sandia Product Information Management System shown in Appendix F. This type of verification checking would be similar to the systems currently employed in the software development industry to ensure interoperability of software modules prior to their integration into a larger software product. Verification checking in the CAD Technology Model Management system could include metadata checking but more detailed checks involving the details of the geometry model construction might also be possible. This type of geometry model checking would be a convenient means of enforcing best practices and of promoting interoperability between CAD geometry models.

Resolving classified computing issues will require long term attention by upper management. Funding should be provided to reinvigorate classified network resources where they have fallen into disuse. These resources include bandwidth, processor speed, and storage capacity as well as interconnectivity between classified networks. Attention should also be given to improving the process of transferring unclassified data from classified to unclassified networks. Overall, a consistent corporate standard for the use of classified computing in the design-to-analysis process should be established and sustained funding should be provided to support the standard.

Cultural biases need to be overcome

In recent years the rewards and recognition system for successfully applying analysis technology to Nuclear Weapons Complex design programs has improved within the analysis organizations. This recognition should be continued and expanded to be on par

[11] Mass properties include quantities such as center of gravity and moment of inertia and are typically extracted directly from the CAD geometry model.

with the rewards for development activities. Additionally, equal rewards should be provided for developers of production computing technology. An equitable reward system would provide encouragement for staff members whose interests lie in production computing and analysis application within weapon development programs, thereby fostering increased application for analysis code technology.

The customer focus within the CAD geometry organizations should be expanded to include analysis as well as other CAD geometric modeling applications. The view of the CAD geometry model as a valuable resource central to the design-to-analysis-to-manufacturing-to-inspection process should be encouraged. This type of "design-for-" perspective is identical to the design-for-manufacturing perspective that is currently taken by the CAD geometry modeling organizations. This focus should be expanded to include the full range of potential customers for geometric model data.

Within the engineering design organizations, the view of analysis as part of the design process should be encouraged. Historically, analysis has had a consultative role in the engineering design process at Sandia, hence the current design-to-analysis process is relatively underdeveloped. In the future, analysis is expected to have a more fundamental role, contributing to design decisions and supporting design qualification activities. One way to achieve this goal would be to include members with analysis as well as design and manufacturing expertise on the product realization teams. An example of this approach is the model validation test unit development efforts that are ongoing in some Defense Program projects. Including analysis early in the design process provides a communication path as well as allowing for a greater lead time to develop appropriate analysis capabilities.

On a higher level, there is a vital need for the corporate management team to recognize the design-to-analysis process as an *unresolved* corporate issue. There have been a number of white papers and internal technical reports since the mid 1990's which have identified the design-to-analysis process as a significant obstacle in the application of computational analysis technology to support design and production at Sandia (Ames, et al. 1996, Gartling, et al.,1997, Dobranich, et al., 2000, Dobranich and Dempsey, 2001, Dobranich and Metzinger, 2001, Gross and Dempsey, 2001). Ames (1996) emphasized the importance of identifying a well-defined and committed owner of the design-to-analysis process. However, organizations that own portions of the design-to-analysis process are widely dispersed across Sandia so that common management reaches the corporate level. High-level management attention will be needed to focus resources on resolving specific organizational and technical issues necessary for process improvement

Do-Nothing Option

An alternative to the recommendations presented in this report is to take no action to improve the current design to analysis process. Dobranich, et al. (2000) have shown that it is possible to provide analysis support for Defense Program applications with the current tools and process. Dobranich also shows that forgoing improvements will prevent the development of a more agile design-to-analysis process as discussed by Gross and Dempsey (2000). Without an agile design-to-analysis process it is unlikely that recent advances in computational analysis, brought about by the Accelerated Strategic Computing Initiative for example, could be applied to Defense Program applications with time horizons shorter than several months. While analysis time scales on the order of months to a year may be adequate to support design qualification activities, many design and testing activities involve significantly shorter time scales of a few weeks to a month. The benefit that these activities will derive from the powerful computational analysis tools currently available will be significantly reduced without the development of a robust, production level design-to-analysis process. Increasing the availability of computational analysis tools earlier in the design phase is the proper technical approach to providing higher quality components and systems.

Appendix A - Summary of Recommendations

Analysis has not been an historical customer of CAD modelers

- The analysis organizations should continue to improve mesh generation /CAD interoperability.
- The CAD geometry modeling organizations should increase staff resources and make the necessary improvements to staff training and skill mix to support analysis as a customer.
- The CAD geometry modeling organizations should actively maintain geometry models to support multiple downstream customers.
- The design organizations should encourage relevant application of the design-to-analysis process.
- The management team should increase funding and resources for the CAD geometry modeling organizations.

A push-button process is unlikely in the current environment

- The application organizations should emphasize the development of application friendly code features.
- The CAD geometry modeling organizations should take ownership of data transfer between CAD and mesh generation applications.
- The CAD geometry modeling organizations should consider geometry filter research to partially automate the generation of analysis model geometry data from the manufacturing definition.
- The design organizations should emphasize design-for-analysis as well as design-for-manufacturing.
- Management should foster the development of design-to-analysis technology which is independent of specific geometry modeling tools.

Integration between CAD and analysis requires communication

- The management team should establish an active community of practice to coordinate design-to-analysis solutions.
- The analysis organizations should support a limited CAD geometry modeling capability.
- The CAD modeling organizations should support a limited analysis capability.

Infrastructure improvements are needed

- The analysis organizations should improve support for production computing.
- The analysis organizations should support analysis model management.
- The CAD geometry modeling organizations should implement a model checking and verification procedure in the CAD Technology Model Management systems.
- The CAD geometry modeling organizations should provide support for engineering databases.
- The management team should provide funding to support classified networks and to make classification/declassification process more robust and responsive.

Cultural biases need to be overcome

- The analysis organizations should ensure the reward system for application and production computing is on par with development activities.
- The CAD geometry modeling organizations should increase focus on down-stream applications such as analysis but also including CAD geometry model interoperability.
- The design organizations should include analysis representation in product realization teams.
- Upper management should recognize design-to-analysis is an unsolved corporate issue requiring continuing attention and resources.

Appendix B - Pro/Engineer Design-to-Analysis Recommendations

Reproduced from Kistler, 1997

For the drafter

1. If possible, consult with analyst before creating model.
2. Ask questions of a Pro/Engineer expert if you are not sure how to create or do something or if you don't understand what the program is doing
3. For new systems designs, create each part of an assembly in a simplified state (no bolt holes, fillets, etc.) and provide the model to the analyst before continuing the parts of the assembly
4. Do not create complex, detailed geometry in sketcher mode or with complex cuts
5. Create many simple features rather than a few complex features
6. Create small features (small steps, small radii, etc.) in large parts as separate features rather than in the large part (sketcher) definition
7. If reasonable without loosing accuracy, position parts of an assembly relative to global rather than local coordinates (do not do for small parts in large assemblies)
8. Use the "thin" option to create solids whenever possible
9. Create mid-plane surfaces for all "shell" structures which may be analyzed
10. Suppress half of symmetric structures in model for analyst
11. Use the "info"/"geometry check" capability of Pro/Engineer to make sure that the created geometries are valid even in Pro/Engineer
12. Communicate with the analyst and work with them before providing them a model
13. Use simplified representations when suppressing features which cause parent-child relationship problems, or to maintain different levels of suppression for the analyst, designer, and drafter in the same model
14. Coordinate suppression of bolt holes, fillets, and other details with analyst

For the analyst

1. Learn the basics of Pro/Engineer -- how to open a model and suppress simple features
2. Ask questions of an expert for your mesh generation code if you are not sure how to do something or if you don't understand what the program is doing

3. Assume that the drafter can create/modify geometry faster than you, so ask them to help
4. If minor changes in the design make it easier to analyze, ask the designer if those changes are possible before meshing the model, get the drafter to incorporate the changes, and then do the analysis
5. If you are modeling more than a single part in the same model, always get an assembly file as well as the part files
6. Use the capabilities of PATRAN to break solids with planes, as necessary, to get best mesh densities
7. If you need to manually position a new part into an existing finite element model, contact Arlo Ames (Org. 9622) or his equivalent to help obtain a transformation matrix from the Pro/Engineer files

For the designer

1. Consider the cost of analysis and manufacture in the cost of the part design -- the "ultimate" design may not be easy to analyze or make, while minor changes might save in both areas
2. Consult with an analyst before making design decisions on important parts, rather than handing the analyst a finished product to model
3. Symmetric or 2 1/2 D designs (parts extruded into the third dimension) are easier to analyze than fully 3D complex parts
4. When asking for an analysis, include the drafter in the communication
5. Make sure the analyst has the support of a drafter, and that the budgets reflect the time and cost savings of having drafting support for the analyst

Appendix C - Design-to-Analysis Problem Definition

Reproduced from Ames, et al., 1996

1. Translation of the solid model from the design system format to the geometry format(s) required by the DtoA system. (For example, Pro/Engineer format to ACIS format)
2. Transformation of the design geometry into the analysis geometry. Examples include feature suppression, splitting along symmetry planes, representing thin solids as shells, and transforming to an axisymmetric representation.
3. Identifying and fixing "dirty geometry." That is, geometry artifacts which result from the method used to construct the geometry rather than geometry that results from design intent.
4. Modification (decomposition and/or simplification) of the geometry into meshable pieces. This step may involve geometry recognition algorithms and it is dependent on the meshing algorithms available in the meshing software.
5. Meshing of each piece of geometry.
6. Managing and identifying geometry and mesh interactions such as ensuring mesh contiguity between contiguous pieces of geometry. Note that this is a relatively simple process if the geometry is meshed at one time in a single program, but it becomes much more complicated if the geometry is meshed at different times and/or in multiple programs.
7. Application of correct boundary conditions, material groups, constraints, and other groupings or identifications required for analysis, postprocessing, or additional preprocessing.
8. Selection of the appropriate physics including material constitutive model selection, material properties appropriate for the analysis conditions, and analysis code.
9. Translation of the analysis model from the meshing system format into the format required by the analysis code. This can include simple file format translations, element and/or node numbering optimization, domain decomposition, and other steps required by the computational environment.
10. Persistence or journalling of the previous steps to facilitate repeated invocations of the DtoA process on similar designs.

Appendix D - Interview Guide

Name _____

MS _____

Location _____

Date _____

Time _____

Introduction

This interview is being conducted as part of a research study to evaluate the design-to-analysis process at Sandia. That is, the process of translating design data in the form of electronic solid models and databases into analysis model data in the form of computational grids and property data. The efficiency of this process is a primary concern in the application of computational analysis tools to support rapidly evolving designs at Sandia. You have been selected for this interview, either by the interviewer or your colleagues, because you play a key role in the design-to-analysis process at Sandia. In addition to you, other staff members and managers from the design groups, analysis code development groups, and production tool development groups will be interviewed.

The information obtained from this interview will be used to develop an understanding of how the design-to-analysis process is currently implemented at Sandia. Interviewee suggestions will be used to provide recommendations for how the process could be improved. The analysis and recommendations will be published in a Sandia report by the end of the fiscal year. Prior to publication, all interviewees will be invited to attend a brief conference to review and approve the contents of the report. All interviewees will receive a copy of the final report.

By participating in this interview you will have the opportunity to positively affect an important engineering process at Sandia. Thank you for your help.

Interview Questions

Below is a general list of questions that will be asked during the interview. This list is only intended to provide some structure to the interview and is not rigid. Other topics may be discussed at the discretion of the interviewee. The interview should take approximately 60 minutes. If more time is required, then a follow-up interview will be scheduled.

What is your background?

In your mind, what is the design-to-analysis process?

What do you see as your role in this process?

What do you need to accomplish your role?

Who are your suppliers for these needs?

What information do you supply?

Who are your customers?

What software tools do you use?

Are these commercial or in house tools?

What is wrong with the design-to-analysis process?

What is right?

Who is currently involved in or working on the design to analysis process?

What work has already been done?

What reports have been published?

What questions should be asked in this study?

Who should be included in the interview list for this study?

Appendix E - Success Factors for Communities of Practice

Reproduced from McDermott, 2000

Management Challenge

1. Focus on topics important to the business and community members.
2. Find a well-respected community member to coordinate the community.
3. Make sure members have time and encouragement to participate.
4. Build on the core values of the organization.

Community Challenge

5. Get key thought leaders involved.
6. Build personal relationships among community members.
7. Develop an active passionate core group.
8. Create forums for thinking together as well as systems for sharing information.

Technical Challenge

9. Make it easy to contribute to and access the community's knowledge and practices.

Personal Challenge

10. Create real dialogue about cutting edge issues.

Appendix F - Product Information Management System

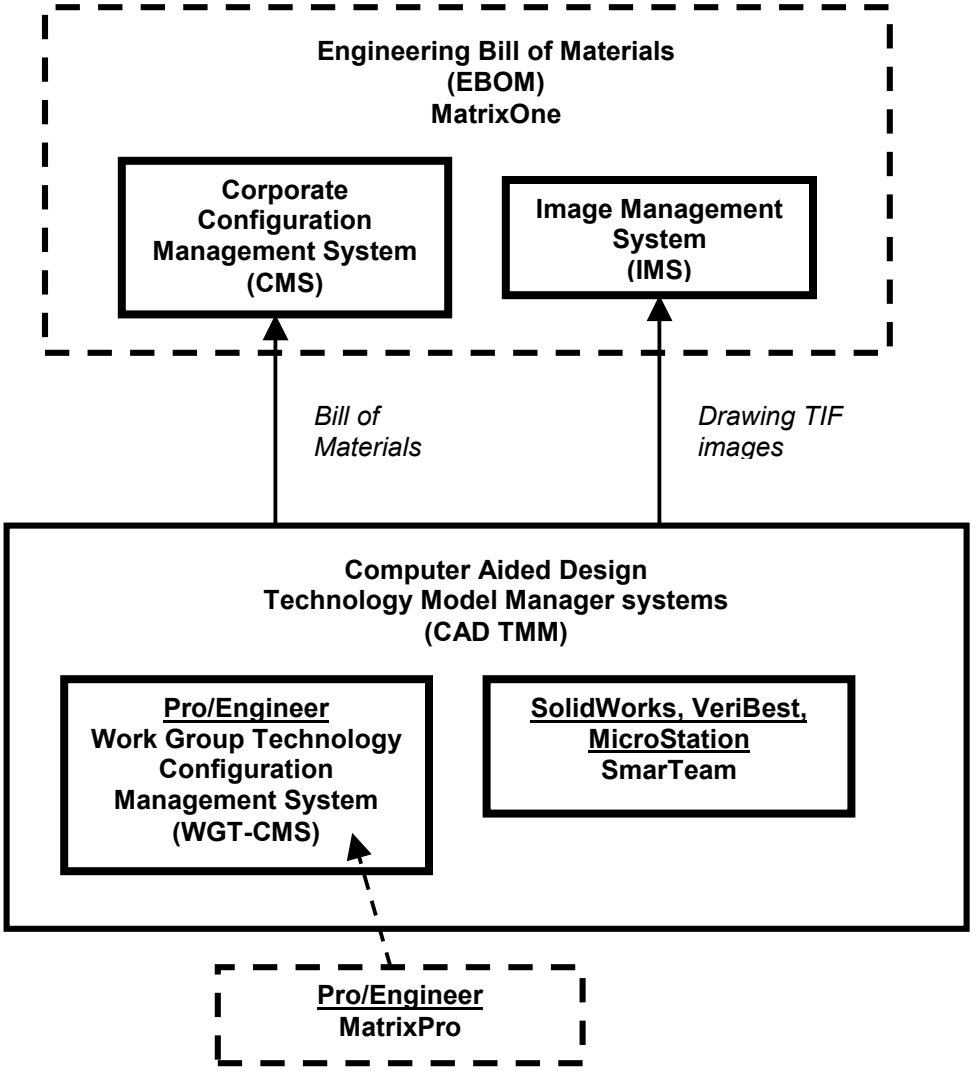

Key:

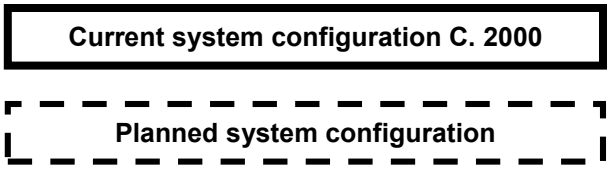

REFERENCES

A. L. Ames, G. S. Heffelfinger, R. R. Lober, S. A. Mitchell, R. W. Ostensen, M. J. Penthaki, G. D. Sjaardema, E. L. Tadios, T. J. Tautges, 1996, "Design to Analysis Action Plan," *Sandia National Laboratories internal memo*, Sandia National Laboratories, Albuquerque, New Mexico, October

S. B. Brunnermeier, S. A. Martin, 1999, "Interoperability Cost Analysis of the U.S. Automotive Supply Chain," Prepared for National Institute of Standards and Technology by the Research Triangle Institute, *RTI Project Number 7007-03*, Research Triangle Park, North Carolina, March

D. H. Crandall, D. E. Beck, 2000, "Models-Based Product Realization for Weapons Systems," *DOE Memorandum*, October 13

D. Dobranich, J. F. Dempsey, B. L. Bainbridge, M. M. White, 2000, "ASCI Safety Applications - W76 Thermal Model Development and the Design-to-Analysis Process," *Sandia National Laboratories Technical Report SAND2000-0074*, Sandia National Laboratories, Albuquerque, NM, January

D. Dobranich, J. F. Dempsey, 2001, "Thermal Design Support for the W76 MC4700 AF&F Replacement," *Sandia National Laboratories Technical Report SAND2000-3095*, Sandia National Laboratories, Albuquerque, NM, January

D. Dobranich, K. E. Metzinger, 2001, "The Use of Abnormal Environment Simulations to Support Design Activities for the W76 AF&F Replacement - An Assessment of the Risks and Benefits," *Sandia National Laboratories Technical Report SAND2001-0249*, Sandia National Laboratories, Albuquerque, NM, February

T. C. Domm, R. S. Underwood, 1999, "Model-Based Engineering and Manufacturing CAD/CAM Benchmark," *Oak Ridge Y-12 Plant Report Y/EN-5839*, Oak Ridge, TN, April 26

D. K. Gartling, S. W. Key, J. Jung, J. R. Weatherby, 1997, "Mesh Generation", *Sandia National Laboratories Internal Memo*, August 26

R. J. Gross, J. F. Dempsey, 2001, "A new W80 three-dimensional model and mesh and its implications regarding the Design-to-Analysis Process and Agile Modeling,"

Sandia National Laboratories internal memo, Sandia National Laboratories, Albuquerque, New Mexico, March

C. M. Hoffmann, 1989, *Geometric and Solid Modeling, An Introduction*, Morgan Kaufmann Publishers, Inc., San Mateo, CA

B. L. Kistler, 1997, "A Study of the Process of Using Pro/ENGINEER Geometry Models to Create Finite Element Models," *Sandia National Laboratories Technical Report, SAND97-8239*, Albuquerque, NM, February

R. McDermott, 2000, "Knowing in Community:10 Critical Success Factors in Building Communities of Practice," *International Association for Human Resource Information Management Journal*, March

R. Mills, 1998, "The Advancing State of Solid Modeling," *Computer-Aided Engineering*, 17(9):56-66, September

M. E. Mortenson, 1997, *Geometric Modeling, Second Edition*, John Wiley and Sons, Inc., New York, NY

L. Sauer, R. Clay, C. Adams, H. Walther, B. Allan, R. Mariano, C. Poore, B. Whiteside, B. Boughton, J. Dike, E. Hoffman, R. Hogan, C. LeGall, 2000, "SIENA Customer Problem Statement and Requirements,", Sandia National Laboratories Report SAND2000-8255, Sandia National Laboratories, Albuquerque, New Mexico, August

J. Sharp, A. Bennett, W. Dalby, S. LeCrone, G. Mahfouz, P. C. Morris, D. Naffziger, P. Naillon, C. Salley, B. Wagner, R. Harrison, 1988, "Interagency Information Study, Final Report," *Sandia National Laboratories Technical Report SAND86-0503*, Sandia National Laboratories, Albuquerque, NM, December

2000, "Use of Models in The Product Realization Process," *Technical Business Practice, TBP-307, Issue A*, Sandia National Laboratories, Albuquerque, NM, June

1	F. Current	8935	0139
1	P. Wilson	9902	0139
1	P. Yarrington	9230	0310
1	M. Craig	2616	0311
1	G. Neff	2616	0311
1	R. Jaramillo	2991	0328
1	S. Rottler	2100	0429
1	H. Abeyta	2101	0453
1	A. Verardo	2990	0469
1	M. Murphy	2900	0469
1	W. Tedeschi	2113	0479
1	M. Harcourt	2114	0481
1	W. Moffatt	2114	0481
1	M. Moulton	2114	0481
1	H. Radloff	2114	0481
1	M. Rosenthal	2114	0481
5	R. Harrison	2114	0481
1	K. Ortiz	2131	0482
1	R. Paulsen	2109	0482
1	S. Lott	2109	0482
1	K. Meeks	2131	0482
1	A. Hillhouse	2112	0483
1	M. Garrett	9122	0555
1	T. Baca	9125	0557
1	K. Haulenbeek	2992	0623
1	C. Evans	2992	0623
1	T. Hoover	2994	0624
1	C. Neugebauer	2994	0624
1	E. Eager	2991	0627
1	L. Grube	2991	0627
1	E. Pulling	2991	0627
1	J. Smith	2991	0627
1	G. Vaitkus	2991	0627
1	E. Young	2991	0627
1	S. Trauth	2993	0628
1	J. Hogan	2907	0632
1	A. Rogulich	2911	0632
1	P. Cowen	12336	0637
1	V. Luk	6420	0744
1	E. Boucheron	9231	0819
1	D. Carroll	9231	0819
1	R. Summers	9231	0819
1	P. Chavez	9232	0820
1	P. Demmie	9232	0820
1	A. Ratzel	9110	0824

1	K. Chavez	9115	0825
1	W. Rutledge	9115	0825
1	L. Schoof	9131	0826
1	R. Schunk	9114	0826
1	J. Zepper	9143	0826
1	W. Hermina	9112	0826
1	J. Moya	9132	0828
1	T. Chu	9100	0834
1	J. Johannes	9114	0834
1	M. Prairie	9112	0834
1	R. Cochran	9111	0835
1	S. Kempka	9141	0835
1	M. McGlaun	9140	0835
10	S. Burns	9141	0835
1	J. Peery	9142	0835
1	B. Bainbridge	9117	0836
1	F. Dempsey	9117	0836
1	R. Gross	9117	0836
1	R. Hogan	9117	0836
1	T. Voth	9116	0836
1	E. Hertel	9116	0836
1	R. Griffith	9117	0836
5	D. Dobranich	9116	0836
1	T. Bickel	9100	0841
1	C. Adams	9125	0847
1	C. Fulcher	9125	0847
1	J. Jung	9132	0847
1	R. Leland	9226	0847
1	K. Metzinger	9133	0847
1	V. Porter	9121	0847
1	G. Sjaardema	9131	0847
1	H. Morgan	9120	0847
1	D. Martinez	9124	0847
1	R. May	9126	0847
1	R. Brannon	9123	0893
1	A. Ames	15222	1010
1	L. Lorence	15341	1179
1	E. Cull	2260	9005
1	C. Hinckley	2266	9013
1	W. Delameter	2267	9014
1	C. Hartwig	8907	9031
1	R. Monson	2263	9034
1	E. Talbot	2254	9036
1	J. Handrock	8727	9042
1	B. Kistler	8727	9042
1	J. Dike	8727	9042

1	V. Rivelli	8727	9042
1	L. Voelker	8727	9042

1 Dr. Timothy Tautges
University of Wisconsin - Madison
Engineering Research Building 425
1500 Engineering Drive
Madison, WI 53706

1	Central Technical Files	8945-1	9018
2	Technical Library	09616	0899
1	Review and Approval Desk for DOE/OSTI	9612	0612