SANDIA REPORT
SAND2000-1550
Unlimited Release
Printed July 2000

Energy Storage Concepts for a Restructured Electric Utility Industry

Joseph Iannucci and Susan Schoenung

Prepared by
Sandia National Laboratories
Albuquerque, New Mexico 87185 and Livermore, California 94550

Sandia is a multiprogram laboratory operated by Sandia Corporation, a Lockheed Martin Company, for the United States Department of Energy under Contract DE-AC04-94AL85000.

Approved for public release; further dissemination unlimited.

Sandia National Laboratories

Issued by Sandia National Laboratories, operated for the United States Department of Energy by Sandia Corporation.

NOTICE: This report was prepared as an account of work sponsored by an agency of the United States Government. Neither the United States Government, nor any agency thereof, nor any of their employees, nor any of their contractors, subcontractors, or their employees, make any warranty, express or implied, or assume any legal liability or responsibility for the accuracy, completeness, or usefulness of any information, apparatus, product, or process disclosed, or represent that its use would not infringe privately owned rights. Reference herein to any specific commercial product, process, or service by trade name, trademark, manufacturer, or otherwise, does not necessarily constitute or imply its endorsement, recommendation, or favoring by the United States Government, any agency thereof, or any of their contractors or subcontractors. The views and opinions expressed herein do not necessarily state or reflect those of the United States Government, any agency thereof, or any of their contractors.

Printed in the United States of America. This report has been reproduced directly from the best available copy.

Available to DOE and DOE contractors from
U.S. Department of Energy
Office of Scientific and Technical Information
P.O. Box 62
Oak Ridge, TN 37831

Telephone: (865)576-8401
Facsimile: (865)576-5728
E-Mail: reports@adonis.osti.gov
Online ordering: http://www.doe.gov/bridge

Available to the public from
U.S. Department of Commerce
National Technical Information Service
5285 Port Royal Rd
Springfield, VA 22161

Telephone: (800)553-6847
Facsimile: (703)605-6900
E-Mail: orders@ntis.fedworld.gov
Online order: http://www.ntis.gov/ordering.htm

SAND2000-1550
Unlimited Release
Printed July 2000

Energy Storage Concepts for a Restructured Electric Utility Industry

Prepared for
Energy Storage Systems Department
Sandia National Laboratories
P.O. Box 5800
Albuquerque, NM 87185-0613

Joseph Iannucci
Distributed Utility Associates
1062 Concannon Blvd.
Livermore, California 94550

With assistance from
Susan Schoenung
Longitude 122 West
1010 Doyle Street
Suite 10
Menlo Park, CA 94025

Abstract

The electric utility industry in the United States is being restructured and is now evolving from a regulated monopoly to a partially competitive, partially regulated group of electricity providers. This report outlines a wide range of innovative ways in which energy storage could be advantageously used in all aspects of this electric supply system of the future, including customer-sited storage. Nine scenarios that consider the use of storage in the restructured utility industry are described. From these scenarios, four themes for guiding the economic and technical application of energy storage are presented.

Acknowledgments

The authors would like to thank the Energy Storage Systems Program at Sandia National Laboratories and the Department of Energy's Office of Power Technologies for sponsoring this work. Paul Butler, Abbas Akhil, and John Boyes of Sandia served as valuable sounding boards for the concepts and applications described and provided excellent suggestions for refining the logic and text.

Contents

1. Introduction **1-1**

2. Core Scenario Assumptions **2-1**

3. Core Scenario Storage Opportunities **3-1**
- Bulk Generation 3-1
- Transmission and Distribution System Storage Applications and Markets 3-1
- Customer-Sited and Consumer Storage Products 3-1
- Combined Benefits Applications 3-1
- Core Scenario Summary 3-2

4. Storage Opportunities in the "Stretch" Scenarios **4-1**
- Very Inexpensive and Efficient Storage Scenario 4-1
  - Load Leveling 4-1
  - Enabling Renewables and Other Nondispatchable Resources 4-5
  - Power Conditioning and Power Quality 4-5
- Environmental Emergency Scenario 4-5
- Fluctuating Electricity Price Scenario 4-7
- Demanding Customer Scenario 4-7
  - Power Quality and Reliable (Continuous) Service 4-8
  - Reliable Supply in a Financially Driven Market 4-8
  - Direct Customer Cost Reduction Through Customer Peak Shaving, Where Demand Charges Apply. 4-8
  - Overall Reduction in the Cost of Electricity Because of Efficient Use of Resources 4-8
  - Remote Locations, Either at the End of a Feeder or Completely off the Grid 4-8
  - Enabling or Enhancing Transit System Reliability and Effectiveness in Urban/Suburban Corridors... 4-8
  - Promoting Electric Vehicle Use and Construction of Infrastructure 4-9
  - Using Energy Storage to Enable and Promote the Use of Electrotechnologies in the Industrial and Agricultural Sectors 4-9
  - Synergies with Nanotechnologies 4-9
- Storage Packaging Breakthrough Scenario 4-9
- Gas and Electric Industry Convergence Scenario 4-10
- Energy Security Scenario 4-11
- Extreme Deregulation and Competition Scenario 4-11

5. Scenario Implications for Storage Technology Development and Market Opportunities **5-1**

6. Conclusion **6-1**

Appendix A: Innovative Customer Uses of Storage **A-1**

Figures

Figure 4-1. Energy Storage Used for Load Leveling Within the Electric System **4-1**

Figure 4-2(a). Power Profiles with No Storage in the System. **4-3**

Figure 4-2(b). Storage Installed in Conjunction with the Generation. **4-3**

Figure 4-2(c). Storage Installed to Buffer a Transmission Line **4-4**

Figure 4-2(d). Storage Sited at Each Customer Location. **4-4**

Figure 4-3. Gas-Electric Tradeoff. **4-10**

Acronyms

CAES	compressed air energy storage
EMF	electromagnetic field
ESCO	energy service company
O&M	operating and maintenance
PBR	performance based rates or rate-making
SMES	superconducting magnetic energy storage
UPS	uninterruptible power supply

Executive Summary

The electric utility industry in the United States is being restructured and is evolving from a regulated monopoly to a partially competitive, partially regulated group of electricity providers. The public's expectation of plentiful, high quality, and low cost electricity for all consumers has not changed and, if anything, will grow in the coming years. Generation, transmission, distribution, and use of electricity will be performed in a great variety of new and evolving ways through the implementation of creative regulatory frameworks, financial instruments, and technologies. One technology that could have tremendous impact is energy storage.

This report outlines a wide range of innovative ways in which storage could be advantageously used in all aspects of the electric supply system of the future, including customer-sited storage. It discusses ways to expand the envelope of possible storage applications and suggests creative uses for storage. It also presents many possibilities for communicating the value and flexibility of storage.

The report begins with a summary of the assumptions made for the study. These assumptions include continuing state-by-state restructuring with federal restructuring directives lagging behind the states. Generation will be a competitive industry, but transmission and distribution will be regulated using performance based rate-making techniques. While overall electricity rates are assumed to decrease, inequities will exist from state to state and between different classes of customers. Technologies for energy storage will continue to improve, but no dramatic breakthroughs will occur.

This report also describes a series of scenarios that consider the use of storage in the restructured industry. These scenarios are:

1. Core (business as usual with steady evolution),
2. Very inexpensive and efficient storage,
3. Environmental emergency,
4. Fluctuating electricity price,
5. Demanding customer,
6. Storage packaging breakthrough,
7. Gas and electric industry convergence,
8. Energy security, and
9. Extreme deregulation and competition.

The following common themes were determined from an assessment of the scenarios:

1. Storage is more likely to be installed at customer sites than coupled to central power plants.

2. An increased interest in environmental issues would accelerate storage technology market entry in many ways; the expanded use of storage is completely consistent with cleaner energy systems.

3. Packaging, ease of use, low initial cost, and high reliability (rather than efficiency and energy density) are the key technology factors in several major market opportunities.

4. Regulatory structures that allow more freedom to solve problems with innovative approaches would be more likely to lead to increased uses of storage.

The implications of each of these themes to electricity providers as well as storage system suppliers and research organizations are also presented.

This page intentionally left blank.

1. Introduction

The title of this report is deceptively simple, as is the topic of electrical energy storage itself. On the surface, storage of electricity is as straightforward as batteries in a car: take a little out when you need it, and recharge it as is convenient. But those familiar with the topic know that storage is one of the most complex and challenging issues in the energy business and that very inexpensive and efficient storage would be the first wish of almost any engineer. This report attempts to develop a broad-ranging vision of the energy systems of the future in which storage technologies may have new applications.

This is an ideal time to consider the profound implications of storage on the future of the electric supply system. The results of electric industry restructuring will surely change the rules by which "utilities" (whatever that term may mean in the future) will operate and will open the doors of competition to many new businesses and may encourage innovative applications for storage technologies. As regulators consider the way the electric business should be redefined, having a vision for how emerging storage technologies fit in will amplify the opportunities for those technologies.

This report outlines a wide range of innovative ways in which storage could be used in the electric supply systems of the future, including customer-sited storage. This report discusses ways to expand the envelope of possible storage applications and suggests creative uses for storage that could dramatically impact the way that energy is produced, delivered, and consumed. This report discusses the many possibilities for future uses of storage or communicating the value and flexibility of storage to those who may not be fully aware of its potential.

This report begins with the assumptions and a general discussion of the full range of uses, benefits, and applications of storage for a likely "Core Scenario" for electric utility industry restructuring, while assuming modest improvements in storage technology capabilities and costs. This scenario covers the leading approaches by states to regulation and the emerging competitive electric utility industry.

Additionally, eight "stretch scenarios" (uses for storage beyond those normally expected) with dramatically different (yet plausible) sets of assumptions for utility regulations and/or storage technology capabilities are defined. These "alternative worlds" are chosen to expand the boundaries of utility, customer, and storage parameters in order to illustrate

- Innovative uses of storage and
- Emerging utility trends to be followed closely by storage researchers wanting to stay "ahead of the curve."

The implications of each scenario for storage technology market opportunities are explored in some detail.

In the final section, the implications of the stretch scenarios are synthesized into some innovative suggestions for potentially profitable storage technology research directions for a competitive electric utility industry.

This page intentionally left blank.

2. Core Scenario Assumptions

Scenarios describing the uses of storage in a restructured utility industry cannot easily be defined without stating what baseline assumptions underlie them all. This set of assumptions, fairly conservative it is hoped, is called the Core Scenario representing the "business-as-usual" utility and customer situations that are most likely to occur, independent of storage technology breakthroughs or other unexpected events.

Electric utility industry restructuring in the Core Scenario is defined by the following parameters:

- Electric utility industry restructuring continues state by state, but only a few states will settle into a fully restructured system before 2003.
- Performance based rate making (PBR) for the regulated wires utilities is more the norm than the exception. (A wires company is a local electric distribution company whose only role is to provide reliable delivery of electricity through its wires, substations, transformers, etc.) PBR is a leading regulatory mechanism that involves setting targets for system reliability levels and allowing utilities more freedom in how they achieve those levels and invest their wires dollars.
- Federal restructuring lags behind rather than leads state actions because the diverse approaches taken by the leading states toward electric industry restructuring are confusing.
- Open transmission access exists with an open market for ancillary services.
- Generation is a merchant function, separated from the wires businesses of utilities.
- These regulated wires businesses are still part of large holding companies and are allowed to do only limited transactions with their affiliates.
- The industry has increased awareness of marginal costs necessary to serve groups of customers or more expensive locations.
- Many holding companies form energy service companies (ESCOs) on their unregulated sides.
- Competitive forces are more important than they were in the past.
- More mergers occur between electric utility companies.
- More convergence of the electricity industry with the gas industry occurs.

Electricity rates drop on the average, but "inequities" abound:

- Average utility rates decline somewhat as competition squeezes out some profits; rates drop fastest for industrial customers, and transition charges are pervasive.
- A few states see very little in the way of rate reductions since they are now exporting much of their cheap electricity to higher-value locations in neighboring states.
- More electric price volatility now exists than in the past; summer peak electric shortages and the financial hedging of competitive wholesale electricity markets cause substantial price peaks to those buying on the spot market.
- Minimal load growth continues.
- Reliability remains largely unchanged, but some areas have poorer service, and rare widespread outages continue to occur.
- ESCOs emerge as broad energy service organizations that serve many customer sectors.

Technologies continue to improve, but no dramatic changes occur:

- Viable, proven storage technologies (similar to those now available or in development) continue to come into the market with somewhat lower costs and improved performance.
- There is a slow trend toward the addition of distributed resources into the grid.
- Several gigawatts of customer-sited standby generators are activated and aggregated into fleets of virtual power plants used during critical peak periods for tens to hundreds of hours per year.

- Large combined-cycle gas-fired power plants dominate new central-generation additions.
- Natural gas remains inexpensive and available, and is the fuel of choice for new power plants.
- Renewable energy resources continue to expand into the marketplace, but only very slowly and by exception through modest green pricing and renewable portfolio standards programs.
- Many technologies compete with energy storage to solve electricity supply problems.

External factors continue to only slightly impact energy decisions:

- No environmental crisis or national energy imperative occurs.
- Customers are becoming a bit more aware of their power as consumers and the need for their utility to be more responsive and flexible.
- Customers become more sensitive to poor power quality, while contributing more distortions to the sine wave through low-quality ballasts and adjustable-speed drives.

3. Core Scenario Storage Opportunities

Under the Core Scenario, energy storage has the same opportunities the industry has been pursuing in recent years.

Bulk Generation

For bulk generation applications, storage is used for seasonal demand matching where inexpensive hydroelectric generation is available or, potentially, where good compressed air energy storage (CAES) geologies are nearby. If high-energy-capacity super conducting energy storage (SMES) becomes practical and cost-effective, it plays into this same market. Very little large storage will be built to use as a physical hedge against the price volatility in the Core Scenario, because of the technology's high price and efficiency penalties.

Storage is also used to smooth the output of intermittent renewables, but this market is very modest because renewables themselves are not entering the market quickly in an absolute sense, and project developers frequently do not desire the complication, efficiency losses, and added capital costs of storage.

Transmission and Distribution System Storage Applications and Markets

Under the Core Scenario, storage systems will likely have an expanded role in the wires systems of the future. Because storage has higher value if added at the lower voltages of the distribution system (primarily because low-voltage sources can solve both transmission and distribution problems simultaneously, but also because transmission costs per unit are much lower than distribution capital costs), those distribution applications will be more prevalent than transmission-system locations.

Battery systems and, potentially, SMES systems could be placed in the transmission system as a way to stabilize imbalances or assist in power export controls. Perhaps some large storage systems could be placed at the high-voltage locations for energy hedging or to serve other merchant functions (such as provision of ancillary services) in transmission systems.

All of the modular storage technologies have the potential for inclusion in the distribution systems of the future, given favorable economics and storage hardware field experiences. Applications such as local load smoothing, peak clipping, reliability enhancements, power quality solutions, and many others seem very reachable with modest technology improvements and careful matching of local application needs with the size and duration of the storage system.

Customer-Sited and Consumer Storage Products

At customer sites, the potential applications for storage are virtually unlimited. Very small storage components are, of course, already present in many consumer products too numerous to list, but more applications will continue to be found to be cost-effective and valuable to customers. Even with no changes in storage technologies, one can envision more storage-powered tools for residential users, and more embedded power sources in industrial processes where nearly flawless reliability is becoming more important and elusive. As another example, commercial customers may add uninterruptible power supplies (UPSs) to systems other than computers and servers.

A few large customers may use substantial storage systems to help them clip their peaks, firm up reliability of large facilities, enhance service for individual critical loads on site, improve their power quality, manage their demand charges, etc. The size of these markets will depend on many factors, such as the type of restructuring in each state, details of the rate structures, local power quality concerns, and the reliability of utility service, not to mention the cost and performance of the storage technologies.

Combined Benefits Applications

The most interesting type of market entry in the Core Scenario may be the gathering of multiple benefits from storage systems installed at lower voltages (i.e., on the distribution system or at customer sites). While the individual benefits of installing storage at generation, transmission and distribution, and customer locations may be substantial, dispatching storage for two or more of these benefits may be more cost-effective.

For example, a peak-clipping storage system at a customer site could, on three different days within a month, do the following:

- Help manage the owner's demand charge by keeping the customer's load below some maximum ratchet point for as little as 15 minutes,
- Smooth a local distribution system-load profile for an hour, or
- Be dispatched for emergency central station supply needs at $10/kWh for two hours.

It may even be possible to earn all three benefits in a single 2-hour period if the problems happen to be coincident and the storage system is sized appropriately.

To pursue such opportunities for joint benefit optimization, utilities and customers must be able to contract with one another, sharing risks and rewards, and the distributed technologies must be proven to be safe, reliable, and cost-effective. Storage faces the added constraint that it is not arbitrarily dispatchable and has a finite duration of capacity.

Core Scenario Summary

Using a simple business-as-usual approach to defining the Core Scenario, we have described a broad array of storage applications throughout the utility and customer systems.

Although not exhaustive, this brief and conservative preview of the potential market applications for storage sets the stage for more innovative thinking under other less-likely scenarios. The Core Scenario has many opportunities for storage, but none of them is revolutionary or appears to be ready for explosive market growth.

The following sections describe more speculative but higher-payoff scenarios for storage.

4. Storage Opportunities in the "Stretch" Scenarios

A wide range of possible alternative situations is described in these scenarios. Some of the scenarios are defined by storage technology progress, while others are caused by external forces (for example, environmental trends and responses). Each of these scenarios is defined as it might impact storage, and the likely roles and market trends for storage are predicted.

Very Inexpensive and Efficient Storage Scenario

In this scenario, storage is virtually free and nearly 100% efficient.

If energy storage systems were free and 100% efficient, they would be used throughout the electric system in three ways, all of which would ultimately reduce the cost of electric service

- To level loads throughout the system, from generation to end use.
- To enable the use of renewable and other nondispatchable resources.
- To condition power, preventing disruptions from reaching customers.

Load Leveling

A major application for energy storage is to level loads throughout the electric system. This includes generation, transmission, substations, distribution, and customer end use. (See Figure 4-1.)

The result would be that all generation would run at constant rating all day and night with the amount of storage sized to meet the varying load demand (including seasonal). This would result in minimum generation capacity, and minimum cost of electricity ($/kWh).

Some of the storage could be placed along the transmission system to provide stabilization, voltage and volt-amp reactive control, and to increase utilization of the transmission system. Such systems would require only small amounts of storage, with fast dynamic or transient control.

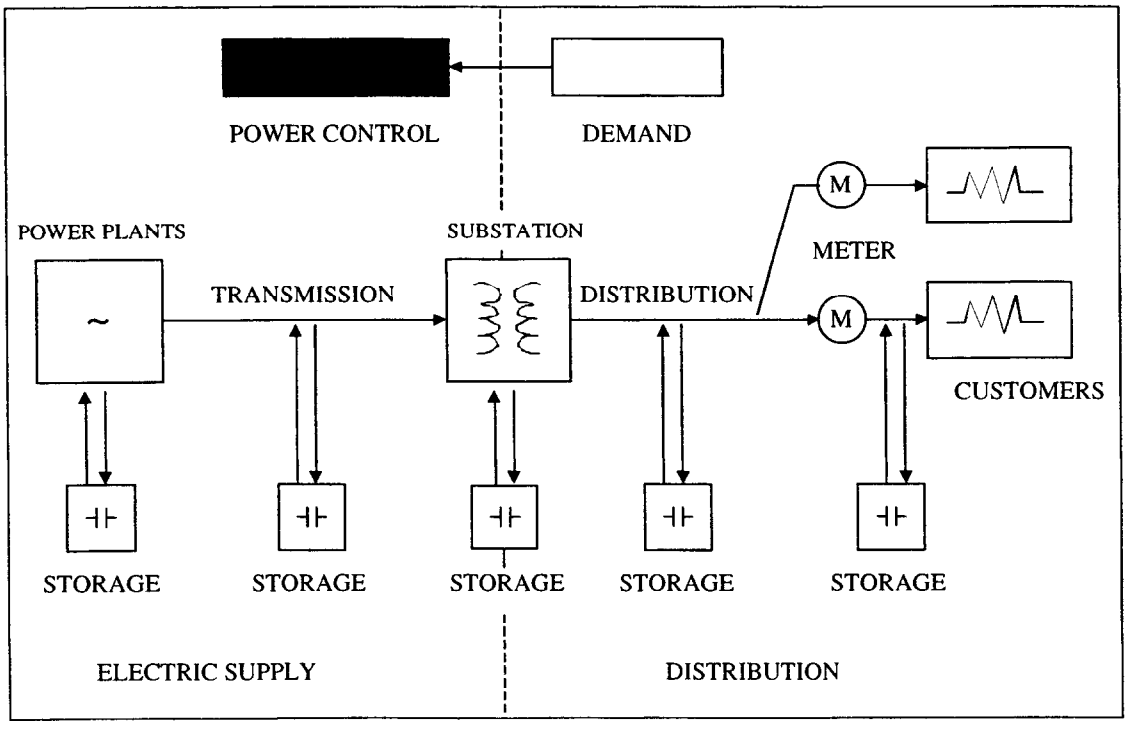

Figure 4-1. Energy Storage Used for Load Leveling Within the Electric System.

Alternatively, storage could be located at the distribution end of the transmission system to buffer transmission lines from variations in load. This would result in minimum transmission capacity. Oversizing would be prevented, and minimum transmission system cost would result. Transient and frequency instabilities would also be avoided.

Storage could be incorporated into substations to ensure stable operating conditions and power flow control. Storage could also be integrated into the distribution system to provide peak shaving and to optimize power flow among feeders, thus reducing all distribution system costs (wire, substation, transformers, operating and maintenance [O&M], land, etc.). The result would be a minimum-cost distribution system. In an ideal system, the need for distributed generation decreases as the use of storage increases.

Storage could also be placed at the customer end to level peaks, absorb transients, and provide continuous service. Storage would also reduce electric bills where customers pay for peak usage in addition to energy usage.

The amount of storage (MWh installed) and its optimum placement within the system to give an overall minimum cost could be directly calculated, if detailed local and regional load profiles were known.

To examine the optimum placement of storage, consider the scenarios in Figures 4-2(a) through 4-2(d). Figure 4-2(a) shows load profiles throughout the system with no storage in place. Note that the customer load profiles vary, but the aggregate or integrated load is generally double-peaked. This profile flows through the distribution and transmission systems and must be met by the generation system.

In Figure 4-2(b), storage is located at the system generation and levels the load so that constant generator output power is achieved. This minimizes generation costs, and increases the reliability of the generation system.

In Figure 4-2(c), storage is located at the distribution side of the transmission system, resulting in constant load on the transmission lines and, just as important, the substation equipment. This also minimizes transmission cost. The storage component would be sized to level the integrated load from all connected customers. Following this scenario's logic, if storage were very inexpensive and efficient, storage should be moved to the customer sites to level each individual load, thus leveling the load on the distribution system. Constant power flow through the distribution system would result in a minimum-cost distribution system. In principle, this is the overall minimum-cost system since the storage is free and the rest of the system runs always at constant power, i.e., with no oversizing.

Several consequences of locating all the storage at the customer locations are that

- All customers will need space for adequate storage to level their daily and seasonal loads.
- The total amount of storage installed will be greater than in the other scenarios, because in the other cases (Figure 4-2(b) and 4-2(c)), there is some averaging over time-varying loads (for example, some customers experience peak load during the daytime work hours, others during the morning and evening).
- The maintenance of multiple small-storage units may be more work than maintaining larger, centrally located units. If not an economic issue, this could be a logistical one.

Thus the optimum mix would probably incorporate storage primarily at the distribution level.

Since the storage is virtually free and 100% efficient, the type of storage selected would be determined by other features. These considerations would include power and storage ratings available, footprint (the floor area required), and any operating or siting constraints. Operating constraints include handling of hazardous materials (batteries), environmental impacts (SMES), or safety concerns (flywheels). Most of these are eliminated, however, if cost is no object. For example, toroidal SMES configurations have no external magnetic field to worry about, but are generally more expensive than solenoid configurations.

Siting constraints are more obvious, such as the need for elevation change in pumped hydro or suitable underground reservoirs for CAES. Footprints also vary widely among the technologies.

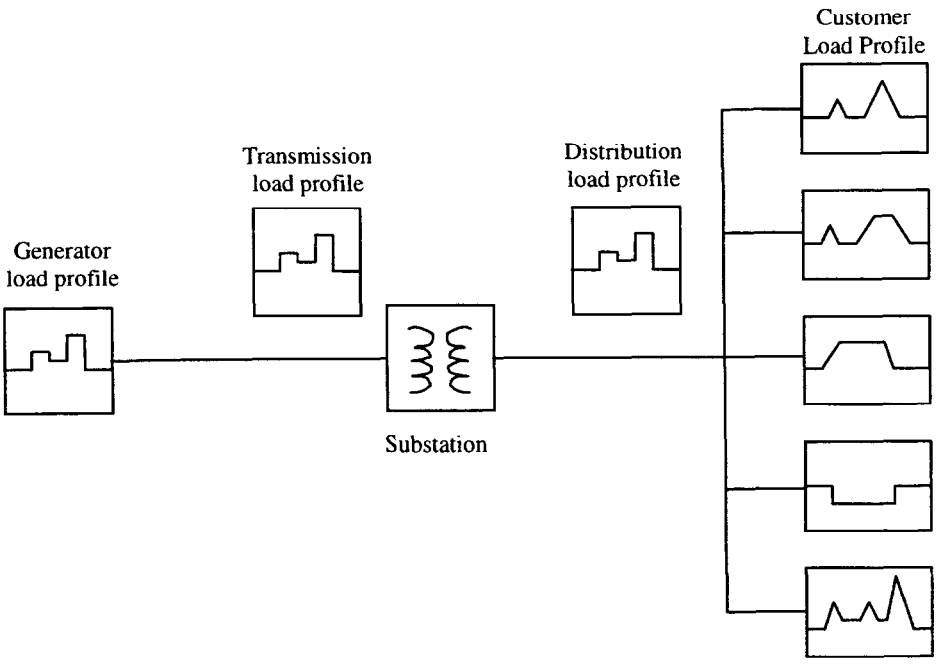

Figure 4-2(a). Power Profiles with No Storage in the System.

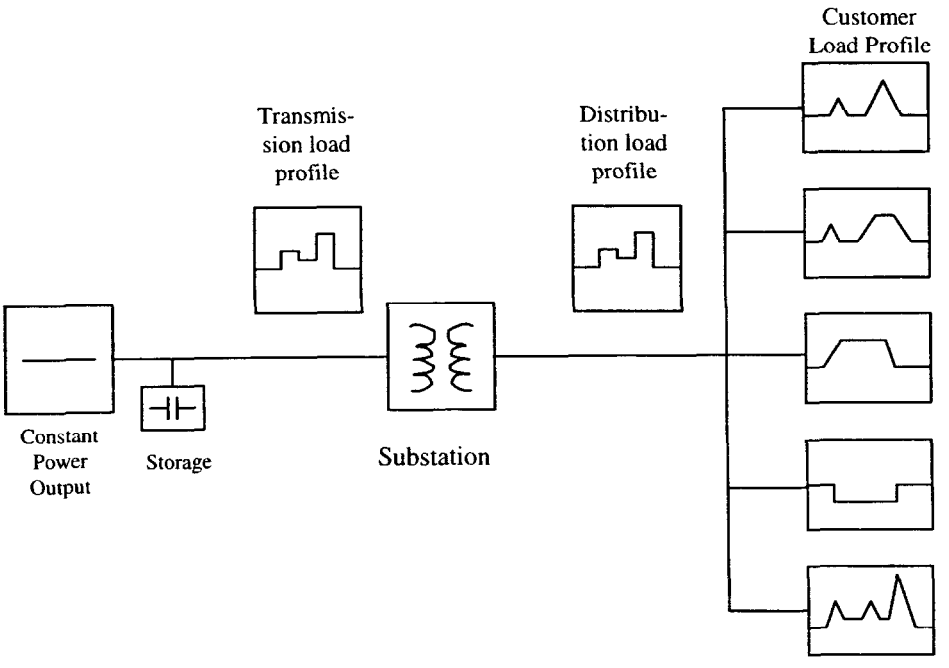

Figure 4-2(b). Storage Installed in Conjunction with the Generation.

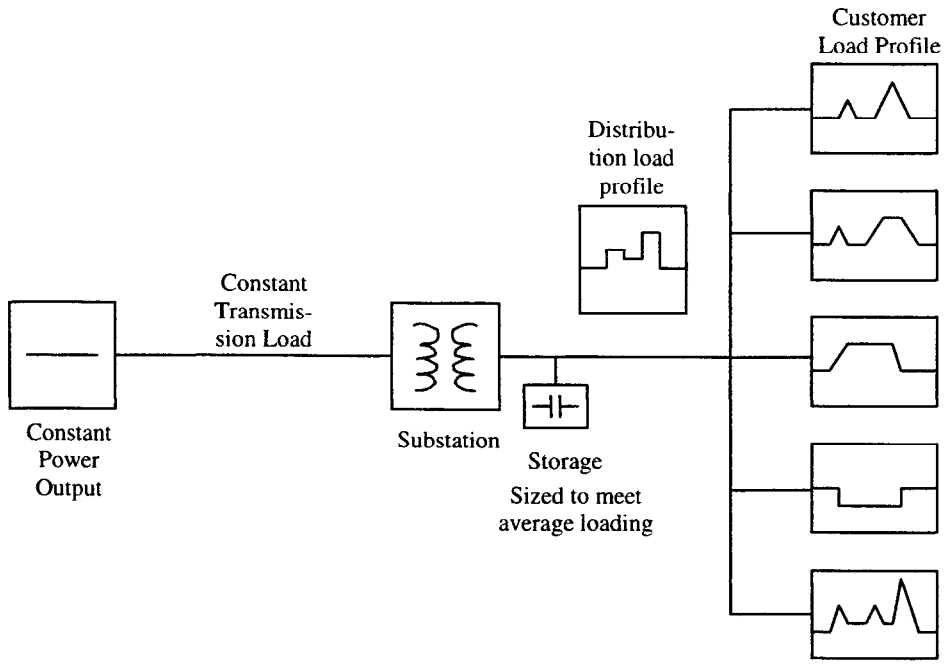

Figure 4-2(c). Storage Installed to Buffer a Transmission Line.

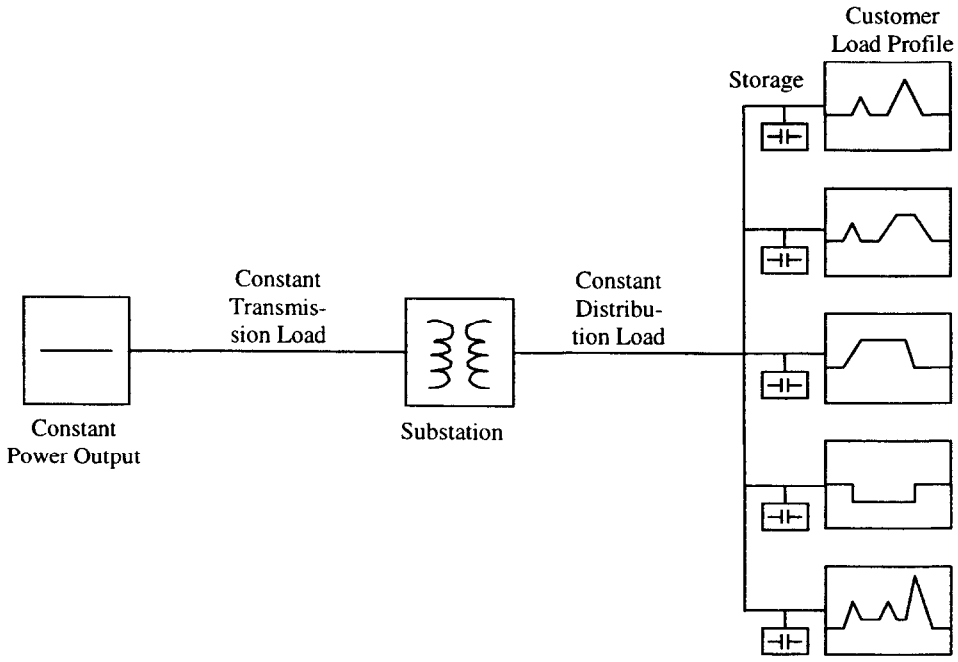

Figure 4-2(d). Storage Sited at Each Customer Location.

Enabling Renewables and Other Nondispatchable Resources

Free, efficient energy storage is a perfect companion to intermittent renewable resources. Storage systems could be matched with photovoltaics, solar central receivers, wind and hydro, to meet local or regional loads with minimum generating capacity. Some storage might be located at the generation site and some at the load. The optimal location would be selected so that transmission equipment could be sized for as steady a load as possible.

Many types of storage can be matched with renewables if the response time is appropriate and the power interface is designed to match fluctuating conditions. This could eliminate pumped hydro and CAES, which have slower response times than batteries, SMES systems, capacitors, and flywheels. The remaining selection would then be based in ratings, footprint, and other constraints, as noted previously.

Cogeneration, similar to renewables, has an unpredictable supply profile. Cogeneration facilities are designed primarily for thermal processes, and electricity is a by-product. If either thermal and/or electric forms of energy storage were included within a cogeneration system, the operation could be optimized around the thermal requirements. Then electricity would be generated and used as needed, with power flow controlled through the storage system. The excess electricity is a nondispatchable resource. It could also be matched with energy storage for optimal use on the electric system to which it is connected. Free storage would be a particular advantage with cogeneration because the ultimate size of the resource is harder to estimate than for renewables, which can be statistically modeled. Storage associated with cogeneration would be best oversized, to capture large electric output events; if the storage were free, no economic penalties would result.

Power Conditioning and Power Quality

Energy storage has another ideal application in ensuring reliable, high-quality power for customers. Some end users are particularly sensitive to outages or variations in power-flow characteristics. Energy storage systems can provide a buffer for these disruptions so that customers' loads are isolated from them.

In this application, depending on the source of the disturbance, storage can be located at the following places:

- At customer sites,
- Within the distribution system at key locations, or
- At the transmission level, if necessary.

The major feature of a power-quality energy storage system is in the design of the power-electronics interface, which must provide rapid response and match the changing voltage and current characteristics of the system as it charges and discharges.

The selection of one storage technology over another would depend most on available sizes (to meet the power rating required) and any operating conditions or limitations that the technology imposes.

Among the characteristics to consider are footprint (especially if a system is to be located at a customer site), lifetime (only to avoid the inconvenience of replacement, since in this case the system is free), and any environmental or safety concerns.

The additional MWh installed of energy-storage technologies could be calculated if power-quality data for points throughout the national electric grid were available. If free and efficient energy storage were available (including the power electronics), utilities might spend less money and effort on other power-quality mitigation, such as lightning arrestors or voltage regulation.

Environmental Emergency Scenario

In this scenario, global warming or some other circumstance forces utilities and customers to rethink the way they make and use electricity. Clean air issues (local air pollution) are best addressed by moving to cleaner or more remote energy production. Global warming is probably caused by CO_2 emissions; remediation will require primarily the use of fewer carbon-based fuels. Taken together, energy storage could be used in the following ways to address such an environmental imperative:

- To reduce emissions at the generation point by
  - *Operation of the plants at optimal environmental settings.* Energy storage used within the electric system generally lowers the overall

need for peak-generating capacity. This allows central generating plants to operate at a steadier level, reducing emissions from nonoptimal operation. Older peaking units with dirtier emissions would be retired.

- *Improving overall system efficiency.* Energy storage, if optimally placed, can also improve the overall efficiency of the electric system, such as reducing transmission-line losses, thus reducing the overall demand and accompanying emissions.

- *Changing generators to cleaner sources.* If energy storage is used to enhance transmission and distribution capability by strategic placement, then generation can take place at locations where cleaner fuels are available. Power will flow to where it is needed. An overall reduction in emissions can be achieved.

- To enable the use of renewable resources and thus reduce the contribution of fossil-fuel generation to pollutant emissions. Because of the intermittent nature of renewable resources, storage is a valuable enabling companion.

- To smooth the output from cogeneration facilities and make efficient use of that resource within the overall system.

- To reduce emissions from distributed generation by coupling with storage. Distributed generation is a growing component of the electric-system mix. It bolsters distribution systems and improves reliability and power quality for large customers. Also, storage is an ideal companion for these technologies so that they can run at optimal settings for minimum emissions production. Alternatively, distributed generation itself may be eliminated if optimal distributed storage is used.

- To reduce industrial emissions by improving process operations and by making the transition from combustion-based technologies to electrotechnologies. Many industrial and agricultural processes require thermal steps that have traditionally relied on combustion-based techniques. In recent years, a trend has begun to make the transition from these processes to electricity-driven technologies. Some examples are metals-forming, paint-drying, grain-drying and induction-sterilization. Although the impetus for utilities to encourage this transition has often been to increase electric load, the result is also a quantifiable reduction in emissions compared to combustion-based processes.

- To reduce emissions from electric generation used for heating and cooling by using thermal energy storage. A significant fraction of all electric demand is to heat and cool living spaces. This demand could be reduced by using thermal energy storage coupled with technologies such as heat pumps. The reduced demand would lead directly to reduced fossil-fuel pollutants. Many industrial and even utility processes could also benefit from thermal energy storage, either hot or cold.

- To reduce vehicle emissions by greater use of

  - *Electric vehicles (storage onboard, usually batteries, flywheels or capacitors).* Vehicle emissions contribute a large fraction of the pollutants that cause local air pollution and global warming. In this arena, energy storage plays a big role. Electric vehicles, which inherently operate from energy storage, are nonpolluting.

  - *Electric recharging stations (incorporating storage to prevent overload on the local distribution system).* The charging electricity comes from generating stations that may be located in a more appropriate place and be more energy-efficient and less polluting overall. Even the local recharging stations can incorporate energy storage to ensure efficient operation of the local distribution network.

  - *Transit (incorporating regenerative braking to load level at the local feeder).* Another way to reduce vehicle emissions is to greatly increase the use of electric-transit systems. These incorporate energy storage for efficient functioning of the train and track. Storage buffers the local distribution from a spiky load. Starting traction is provided from storage, and energy is conserved through regenerative braking.

- To accelerate the use of hydrogen as an energy carrier, both within the utility sector and the transportation sector, thus eliminating CO_2 emissions. Hydrogen is a nonpolluting resource, both for utility use and transportation. The development of a hydrogen-based economy addresses directly the problem of global warming. Hydrogen storage is an essential component of a hydrogen-based econ-

omy, since hydrogen is an energy carrier, just like electricity. Hydrogen-based systems are also compatible with other types of storage that may have lower cost or better operational features in some situations.

Fluctuating Electricity Price Scenario

In this scenario, the daily, weekly, or annual level of energy and delivery prices of electricity become unpredictable. Prices may rise or fall on average, but their extreme variability is the only certainty in this scenario.

Such customer price variations occurred in the summer of 1998 in the Midwest and Northeast. In some cases the cost of spot electricity rose to near $10/kWh for several hours. The debate continues over the real cause and whether such variations in electricity prices are healthy market indicators or a symptom of something wrong with the market. We do not concern ourselves here so much with their causes, but only with how such wild variations might present opportunities for the storage community.

If the fluctuations occur over a long time period (say 8 hours), storage will have a difficult time entering the market because of other more competitive options. Storage systems with long discharge durations and that are used infrequently have poor economics. However, if the fluctuations have a duration of an hour or less, the market for storage could be substantial.

For central storage, utilities or energy brokers may choose to install more short-term storage. Their goal would be to serve this very high-value spot market when it occurs.

To look at a specific example, let us assume 20 periods of high price fluctuations per year, each one hour long, and each valued at $10/kWh. This yields a gross income of $200/kW-year. Since the premium is on availability of the power rather than the efficiency of the storage system in this market scenario, the storage system efficiency becomes irrelevant. Even if the energy to charge the storage system were bought at a pessimistic rate of $.10/kWh and the storage system round-trip efficiency were as low as 20%, the charging energy would cost only $10/kW-year; this is negligible with respect to income. Continuing with this hypothetical example, if the owner of this storage unit were to finance it so that the length of the loan, interest rates, etc., yielded a pessimistic 20%-per-year carrying charge (most utilities currently would say 12%), the net $190/kW-year income could support an installed cost of one hour of storage of approximately $950/kW.

Of course there would be some O&M costs, but the storage unit is cycled only 20 times per year. If the price fluctuations were more frequent or even larger, then roughly proportionately more could be paid for the storage unit. In addition, if there are other more frequent, lower-value price fluctuations, these might also be served, adding to the gross income stream. Notice that if several of the price peaks are occasionally broader than one hour, there is no economic penalty to the owner of the units, only a missed opportunity to make even more money. This scenario could be very interesting for the storage community.

Because of its high capacity costs and relatively low energy costs, hydro-storage dams would probably not be used unless it is just an increase in the peaking capacity of such units. Such added water through-put might cause water-flow excesses downstream, however. Adding a boost capability to an existing CAES plant or designing new CAES plants with a super-peaking capability might be more favorable.

It would seem that the more modular, medium- to short-duration storage technologies (batteries or SMES, for example) might get the biggest market boost in this scenario. They are familiar enough to their potential owners, reliable, fairly simple, very modular, and suited to meet these occasional peak-capacity needs.

Very short-duration storage technologies would have very few additional benefits in this scenario unless the price fluctuations occurred (and were assessed) within very short time frames; this is very unlikely.

If a new technology could be designed specifically to meet this scenario it would have moderate-to-low capital cost, fair reliability, any efficiency (above 10%), any reasonable variable operating costs, and low fixed operating costs; unattended operation capability would be helpful. Rapid response to discharge commands and quick drain-down capability would be important, while fast recharge rates would be unimportant.

Demanding Customer Scenario

In this scenario, customers become very demanding on their suppliers of electricity. Under these conditions, more options are wanted, better and/or tailored services are requested, lower costs are demanded, or new load

types are connected. As customers become accustomed to being selective and demanding about cost and performance from their energy providers, storage will become an enabling technology for improving customer service. The possible functions are described in this section. They focus on reducing electric bills and providing high quality-of-life service.

The customer sectors addressed in this scenario include

- Commercial
- Residential
- Industrial
- Agricultural
- Community
- Transportation

Some areas where energy storage may help serve these customers are discussed below.

Power Quality and Reliable (Continuous) Service

This is especially critical in manufacturing and process industries with sensitive equipment and in establishments where critical services are provided, such as hospitals and hotels. Uninterruptible power and voltage-sag protection will be the dominant applications.

Many types of energy storage can address power quality problems. The selection of one technology over another and the potential market penetration (MWh installed) depend almost entirely on the cost of the technology in comparison to the value of reliable, steady power. The value is often measured by the financial loss incurred when a problem occurs. In critical-care situations, the value is not measured in financial loss, but rather by the cost of redundant power-generation capability. Beyond cost, some distinguishing features are size, lifetime, and safety considerations.

Reliable Supply in a Financially Driven Market

In the more general sense, storage can be incorporated to provide overall reliability in a business-oriented market. Where power flows are dominated by financial transactions, energy storage can provide a physical (and psychological) hedge against breakdown in the delivery system. Relatively large-scale systems may fill this need for large transfers of power on a regional basis. Advanced pumped hydro or CAES with fast response capability or large-scale SMES would be ideal.

Direct Customer Cost Reduction Through Customer Peak Shaving, Where Demand Charges Apply

This can be significant for some customers in some locations. Local storage can effectively cut local peaks.

Overall Reduction in the Cost of Electricity Because of Efficient Use of Resources

See the free-storage scenario (Very Inexpensive Efficient Storage Scenario, page 4-1).

Remote Locations, Either at the End of a Feeder or Completely off the Grid

Customers at the end of a radial feeder often suffer the most problems because of outages or poor power quality. Energy storage can eliminate or significantly reduce these problems if installed at a customer site or strategically along the feeder. Problems caused by environmental factors (lightning, tree interferences, etc.) can be damped. In some cases, storage combined with high-speed transfer mechanisms can enable solutions using dual feeders, or storage can eliminate the need for dual feeders altogether.

Customers who are off the main grid can be supplied using renewable sources coupled with storage. In many instances, adding storage is a much better solution than the use of diesel generators alone, since it is less intrusive to the environment, reduces the need for fuel, and adds to the owner's sense of self-reliance.

Enabling or Enhancing Transit System Reliability and Effectiveness in Urban/Suburban Corridors

Customers depend on reliable electric power to operate transit systems for commuters. The functioning and reliability of transit systems can be improved by using energy storage in the interface with the local distribution network. The large transients that occur during

acceleration and braking can be buffered, thus protecting the distribution connection and also conserving energy. Storage could be used to support the voltage on long stretches of track, reducing voltage sags and train stalling (as in the BART tubes under San Francisco Bay).

Promoting Electric Vehicle Use and Construction of Infrastructure

As certain geographic regions begin using electric vehicles more, customers will expect local utilities to support the infrastructure that makes the use of these vehicles as convenient as conventionally fueled vehicles. Energy storage can play a role in recharging stations to prevent overload on the distribution system during peak recharging periods (which may coincide with other demand peaks).

Using Energy Storage to Enable and Promote the Use of Electrotechnologies in the Industrial and Agricultural Sectors

As utilities encourage their customers to convert combustion-based processes to electrotechnologies for cleanliness and efficiency, they may find increased roles for energy storage to buffer those loads from being disturbed by or causing disturbances on the local grid.

Synergies with Nanotechnologies

If micro- and nanotechnologies become important in customer systems (for example, to allow much more intimate process monitoring, finer controls, and even nanomanipulation of flows or motions), such minute components will either need to be

- Wired into a harness to provide it with motive power,
- Supplied with fuel in some way, or
- Powered with a nanostorage device (if such a device could be remotely recharged).

Storage would seem to be at least as feasible as the other two approaches if recharging can be accomplished easily; this possibility seems to be worth further study.

Appendix A provides further information. It includes the results of several brainstorming sessions on the potential innovative uses of storage at customer sites. Some of these applications require technology breakthroughs, but they illustrate the wide range of customer uses that are possible.

Storage Packaging Breakthrough Scenario

Two characteristics of energy storage that are often considered are energy density (kWh/m^3) and power density (kW/m^3). These parameters relate to the size of a system and therefore the space required to house it. A related parameter is footprint, or the floor area required. Current technologies vary widely in these characteristics. In addition, some technologies also require "auxiliary" space, such as a keep-out zone for the magnetic field surrounding a SMES unit, or the safety containment for some flywheels.

Some current technologies also have scaling characteristics that make them less attractive in smaller, modular units. Economies of scale are an advantage for large applications and a disadvantage for small applications. In this scenario, we consider the use of energy storage that is modular, has high energy and power density, and has no environmental or safety constraints. A fictitious example could be a storage "paint."

If energy storage were more convenient (modular, compact, safe, and environmentally benign), even if not free and not 100% efficient, it could be used in all of the circumstances that were described in the Very Inexpensive and Efficient Storage Scenario for load leveling, for transmission stabilization, or for providing power quality.

For many applications (for example, large-scale load leveling), space is not necessarily a concern, however, and a new, more costly technology would not penetrate there as much as if it were free. The likely place for insertion would be on the smaller end of the scale (substation, distribution, customer end use), where space is limited.

A particularly exciting development would be for innovative configurations to become available that could easily fit within typical customer work or living spaces. Some small-scale batteries are currently being made to fit hand-held appliances. Batteries and capacitors are the most likely technologies to be used this way, since toroidal SMES and rotating flywheels

inherently have circular features. In any case, development in this direction encourages load leveling at the customer end of the electric system, leading to constant power flow throughout the rest of the system, as shown previously in Figure 4-2(d). This minimizes the cost of the delivery system overall.

Another innovation that could reduce system and operating costs would be to eliminate wiring by charging storage components inductively. The technology to do this has already been developed for the electric vehicles industry. With such systems, home appliances, factory machinery, street and other community lighting, and many other types of electric equipment could be operated from stored energy. Recharging would take place on an optimal schedule.

Realistic economics would necessarily result in a lower penetration rate (MWh installed) than an entirely free storage scenario. Cost estimates might be made from load data, power-quality data, and financial-loss data, in conjunction with cost and efficiency data for the storage technologies.

Gas and Electric Industry Convergence Scenario

In this scenario, through a series of mergers and acquisitions and because better gas-conversion technologies arise, the gas and electric industries become nearly indistinguishable. These dual-energy companies will probably not care which form of energy they sell; they are capable of converting natural gas into electricity where and when it is needed, for example with on-site generation. There are no business boundaries separating these two energy forms, only a question of maximum profitability and service quality (both gas and electric).

Such a schematic is shown in Figure 4-3, where a natural gas pipe and the wires are shown in a parallel format. Depending on the economic details of the conversion process of natural gas to electricity (primarily heat rates and capital costs), the electricity can be created where it would be most profitable.

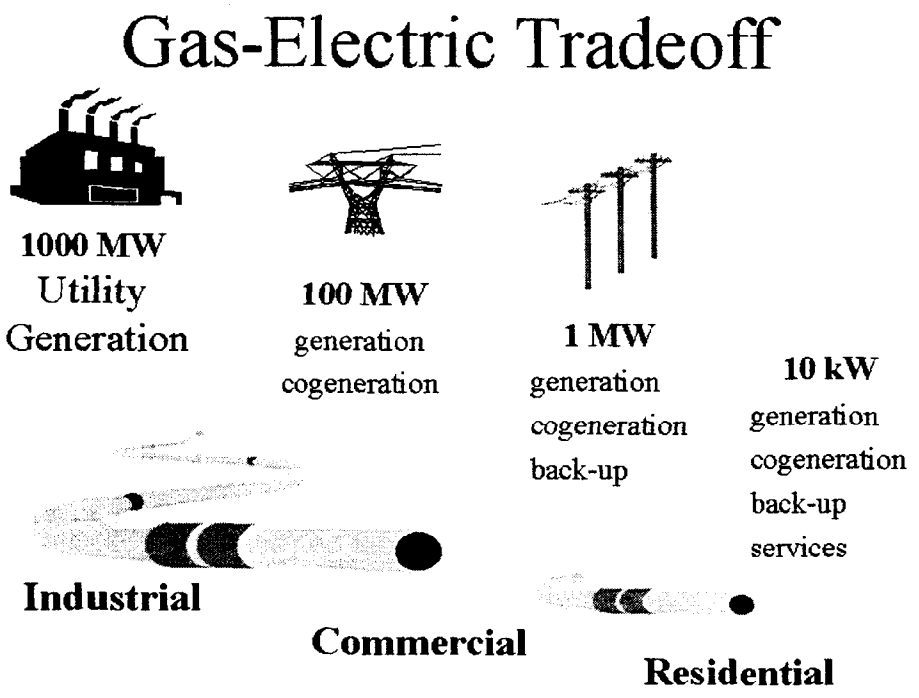

©1998 Distributed Utility Associates

D-32

Figure 4-3. Gas-Electric Tradeoff.

Here the combined company's "wires" can easily become redundant with gas pipes and vice versa. Depending on the cost to serve each customer and on local business regulations and practices, new and old customers could be served by electric only, gas only, or both (as is now the practice). If the company could be more profitable selling gas and converting to electricity at the point of use, this would be preferred.

This could lead to abandonment of wires in some cases in favor of bringing only gas service to a customer. In this scenario, electric energy storage will have shrinking market opportunities, since gas is much less expensive to store than electricity; it is also more efficient to store natural gas than electricity. If local ordinances forbid gas storage, however, on-site electricity storage may still be desired in some applications. If gas service reliability were to deteriorate, then electricity storage would become more important.

In areas where natural gas becomes the preferred energy delivery choice, only the very modular, very short-duration storage technologies would have many applications, mostly in tandem with on-site generation units to help short-term ride-through or power quality. In areas without natural gas access, electric storage markets would be unaffected.

Energy Security Scenario

In this scenario, the electric and/or gas infrastructure becomes fragile or is threatened with possible demolition. National action is needed to come up with alternatives to counteract this problem. Could storage technologies play a large role in this situation?

Whether our energy delivery systems could become weak or not, just the threat of their being damaged is a real concern. No one is patrolling the transmission and distribution systems continuously to make sure that they are not tampered with. Many transmission systems are especially at risk since they may carry the output of several power plants and be hundreds of miles long. A single break in a line could cause a major outage, as evidenced in northern California in 1998. As this is being written, the area around a major service center in San Francisco is cordoned off because of the discovery of hundreds of pounds of ammonium nitrate (and other bomb-making materials and instructions) illegally stored on site.

If only the electric system were at risk, the gas system could be designed to provide substantial support through local generation. Electric storage would have very high value, but massive amounts of storage would be needed to solve the major long-term outages that might occur. This situation would be quite different from having an electric system with naturally degraded reliability, but most of the failures would be at the generation and transmission level.

The very large distribution system would not be worth the trouble to try to sabotage since very few customers are affected by each distribution system failure. It would seem that the amounts of storage needed to solve these outages would be excessively expensive compared to relying on local generation from the gas system. If no local fuels are available, this is a very bad situation; perhaps some storage could be added for emergency services, but relying on storage in general seems unlikely.

If both the gas and electric systems become weakened, the mutual support of these energy delivery industries is just as important, but now electric storage becomes even more valuable. Perhaps a portable fleet of storage units would help, but this seems unlikely because high-energy-capacity storage is not easy to move. It also seems that the storage industry might have a hard time responding to market demand in this scenario. The best hope might be simple home storage units rechargeable from an automobile's alternator, an unattractive alternative for many reasons such as safety, excessive gasoline use, inefficiency, wear and tear, etc.

Distributed storage (storage placed throughout the distribution system) would be a help during relatively brief outages (several hours) occurring for any reason, but despite their local nature, they could not be recharged if the transmission and generation systems were compromised for a longer period. Distributed storage would play a major role during security-caused outages in supplying emergency power to critical individual loads for brief periods of time.

Extreme Deregulation and Competition Scenario

In this scenario, regulators (state and/or federal) nearly dissolve the utility monopoly for the wires in addition to the open market for bulk electricity assumed in the Core Scenario. The (former) utilities have little choice but to run their businesses as non-monopolies, with a few important exceptions still in the overwhelming public interest such as lifeline rates and minimal reliability and power-quality standards.

Nearly every function the wires companies now serve would be unbundled and priced at rates set by the marketplace, rather than a commission. We would expect to see customer-specific (or at least location-specific) electric rates priced near or above the margin to serve each customer (or location). Retail rates would be offered in many different packages and forms to meet customer needs: hourly spot prices, curtailable rates, risk-free long-term rates, power-quality adjusted rates, reliable service guarantee adjustments, group discounts, green pricing, etc.

Such a scenario offers many new opportunities for storage. On a retail level, customers may choose to use storage to hedge against temporarily high spot electricity prices, or to buffer sensitive equipment from poor power-quality events. The degradation of service quality, the lack of firm and uniform pricing, and locally poor reliability will lead some customers to hire ESCOs to solve many of their problems, sometimes with storage solutions. Utilities more in tune with customer needs may offer such storage-based solutions themselves.

States that encourage such severe competitive practices will have to allow utilities discretion in the obligation to serve in rate setting, in marginal costing, and in creative sharing of risks and rewards with their customers.

Locational pricing will eliminate the averaging and localized cross-subsidies now employed by utilities. If locational pricing is coupled with near-real-time cost of power, extremely sharp peaks in rates will occur frequently, making storage a critically important and valuable technology in this scenario.

5. Scenario Implications for Storage Technology Development and Market Opportunities

The scenarios described previously reveal some interesting perspectives on how storage might be used in the future as restructuring and storage technology breakthroughs unfold. Some of these ideas seem to suggest new research directions for storage and a few electric utility industry restructuring effects, which, if they occur, would significantly impact storage applications and markets. The themes below arise from the scenarios.

1. Storage is more likely to be installed at customer sites than coupled to central power plants.

In almost all of the scenarios (including the Core Scenario) storage appears to be more or much more favorable (economic, cleaner, more valuable, etc.) the closer to the customer it is installed.

- In the free-storage scenario, when all else is equal, storage was located at the customer sites, allowing base-loading of the wires and generation systems.
- Environmental benefits are maximized by customer-sited storage because of reduced line losses and cogeneration synergies.
- Customers have more flexibility in rates and pricing with their own storage.
- Reliability can be maximized with storage on site.
- Even the packaging scenario seems to allow for more customer-owned storage applications.
- If customer sites are not feasible, the distribution system is the next most likely and valuable location for storage.

2. An increased interest in environmental issues would accelerate storage technology market entry in many ways; the expanded use of storage is completely consistent with cleaner energy systems.

If energy is to be conserved or if emissions are to be reduced, storage could play a major supporting role.

- Storage installed anywhere in the system could allow operation of central power plants at their cleanest settings.
- Storage placed near loads would reduce line losses.
- Dispatch of renewable resources is easier with storage.
- Cogeneration has a surprisingly beneficial synergy with electric or thermal storage.
- Customer uses of storage may accelerate the use of cleaner electrotechnologies.

3. Packaging and ease of use (rather than efficiency and energy density) are the key technology factors in several major market opportunities.

Many potential applications at both utility and customer sites are almost independent of round-trip efficiency.

- ESCOs wishing to serve the rare but very valuable fluctuating energy price peaks will care much more about first cost and reliability than efficiency or recharge rates.
- Customer uses of storage would expand if packaging flexibility and recharging ease were improved to the point that no wiring would be needed at all; efficiency is a secondary effect compared to the extra value of more dispersed controls with no wiring needed.
- Storage synergies with micro- and nano-technologies may be worth exploring.

4. Regulatory structures that allow more freedom to solve problems with innovative approaches would be more likely to lead to increased uses of storage.

Current utility practice does not encourage departures from the norm or partnerships with customers, both of which are vitally important to storage implementation.

- Performance based rate-making encourages risk-taking by rewarding successful cost reductions and reliability improvements.

- Competition will push utilities closer to their customers or the customers will find other options/partners such as independent ESCOs.

- Storage is an excellent way to improve local reliability and power quality, both of which will be important under PBR.

- Marginal costing makes storage site targeting easier and more cost-effective for utilities.

- States that allow risk and reward sharing between parties (such as between utilities and customers or between utilities and ESCOs) could install more storage.

On the other hand, storage may be less attractive than might be imagined in the following two instances:

- Gas-electric industry convergence will tend to deemphasize many of the normal benefits of electricity storage. However, in regions not served by natural gas, electricity storage will be a much more valuable commodity, leading to possible niche markets and soft market-entry points in those geographical areas.

- Storage may not be very helpful in the most likely and severe energy security situations.

Storage researchers seeking new directions consistent with the scenarios that were described should consider the following:

- Emphasis on small, modular, and customer on-site storage technologies.

- Innovative and flexible packaging schemes, adaptable to almost any shape, integrable with customer appliances, micromotors, lighting systems, control systems, etc.

- Inductive, rapid recharging systems for appliances.

- Coupling micro- and nanostorage with micro- and nanotechnologies.

- Developing storage technologies that are low in efficiency but that have a low initial cost.

6. Conclusion

This report has attempted to go "outside the box" by assuming several extreme situations for the use of energy storage in utility applications. The assumptions that were made allowed us to explore the full range of potential storage applications and describe electrical systems that take maximum advantage of storage. This work should encourage storage developers and potential users to more closely examine near-term applications of energy-storage technologies, expedite pathways to the longer-term applications outlined in this report, and accelerate the market development of the technologies. Only time will tell which of these innovative storage applications will become reality.

This page intentionally left blank.

Appendix A
Innovative Customer Uses of Storage

Customer Uses of Inexpensive, Efficient Storage

The following lists were the product of several brainstorming sessions on how storage at customer sites might be used in innovative ways in the future.

Industrial

Micro-process control
Micro-robotics
Cogeneration output leveling/thermal versus electric dynamic rebalancing
Ride through lasting hours
Power quality "farms"
Surge protection
Seasonal storage of electricity, especially for green uses
DC controllers, DC circuits
Lower frequency (10 hertz?) sources for special purposes
Arbitrage?
Regenerative and dynamic braking of mechanical devices
Avoid on-site liquid or gaseous fuel storage for backup or emergency purposes
Avoid n+1 engine running for ramp-up, backup
Uses during interruptible/curtailable periods offered by utility
Sale to neighboring customers during outages
Sell local reliability "credits" (use to bolster local reliability) to utility if utility is on the edge of a PBR reliability cliff
Ditto for transmission access
Use in concert with distributed generation which may be on the edge of an emissions constraint (say, 200 hours per year)
Dynamic tags on products being manufactured

Commercial

Several of the above
Carry-through to keep cash registers or other vital hardware working
"Spare the air day" operation to avoid local or regional emissions
Trend away from plug-in appliances toward rechargeables
Expanded acceptance of interruptible/curtailable periods offered by utility (packaged service by utility)
Whole building UPSs
Dynamic tagging of products

Residential

Pool pump scheduling during day, charge from grid at night
Load leveling
Expanded acceptance of interruptible/curtailable periods offered by utility
Super safe wiring (disconnected from utility when not in use)
Electromagnetic field (EMF) reductions by using more DC wiring and appliances
EMF reductions by using DC electric blankets
Home renewables installations
Whole-home UPSs
DC homes
Combined electric vehicle recharging and home power management hardware/software
Lighting (or other small, distributed energy consuming) systems that are rechargeable; no wires? Inductive charging? Ambient light charging with photovoltaic?
Laser-photovoltaic charging?
Microgrids

Other

Storage for all emergency buildings, facilities, situations
Portable medical devices, stimulators for healing, oxygen production, etc.
Personal environment

This page intentionally left blank.

Distribution

Bob Weaver
777 Wildwood Lane
Palo Alto, CA 94303

Eric Rudd
35 Harmon Ave
Painesville, OH 44077

Robert W. Fenn
6335 Coleridge Road
Painesville, OH 44077

Dutch Achenbach
2111 Buffalo
Casper, WY 82604

Per Danfors
ABB Power T&D Co., Inc.
16250 West Glendale Drive
New Berlin, WI 53151

Hans Weinerich
ABB Power T&D Co., Inc.
1460 Livingston Ave.
P.O. Box 6005
North Brunswick, NJ 08902-6005

Jim Balthazar
Active Power
11525 Stonehollow Dr.
Suite 255
Austin, TX 78758

Robert Wills
Advanced Energy Systems, Inc
Riverview Mill
P.O. Box 262
Wilton, NH 03086

David Lockard
Alaska State Div. of Energy
333 West Fourth Ave.
Suite 220
Anchorage, AK 99501-2341

Percy Frisby
Alaska State Div. of Energy
333 West Fourth Ave.
Suite 220
Anchorage, AK 99501-2341

Peter Crimp
Alaska State Div. of Energy
333 West Fourth Ave.
Suite 220
Anchorage, AK 99501-2341

Phillip R. (Phil) Beaver
Albemarle Corporation
8000 GSRI Avenue
P.O. Box 14799
Baton Rouge, LA 70820

Thomas Ablel
American Superconductor Corp.
8371 Bunchberry Court
Citrus Heights, CA 95610

C. Shih
American Elec. Pwr. Serv. Corp.
1 Riverside Plaza
Columbus, OH 43215

Meera Kohler
Anchorage Municipal Light & Pwr
1200 East 1st Avenue
Anchorage, AK 99501

Tim Ball
Applied Power Corporation
Solar Engineering
1210 Homann Drive SE
Lacey, WA 98503

Ralph M. Nigro
Applied Energy Group, Inc.
46 Winding Hill Drive
Hockessin, DE 19707

Christian St-Pierre
ARGO-TECH Productions, Inc.
Subsidiary of Hydro-Quebec
1580 de Coulomb
Boucherville, QC J4B 7Z7
CANADA

Gary Henriksen
Argonne National Laboratories
9700 South Cass Avenue
CTD, Bldg. 205
Argonne, IL 60439

Ira Bloom
Argonne National Laboratories
9700 South Cass Avenue
CTD, Bldg. 205
Argonne, IL 60439-4837

Alan Wolsky
Argonne National Laboratories
9700 S. Cass Avenue
Building362
Argonne, IL 60439-4837

Herb Hayden
Arizona Public Service
400 North Fifth Street
P.O. Box 53999, MS8931
Phoenix, AZ 85072-3999

Ray Hobbs
Arizona Public Service
400 North Fifth Street
P.O. Box 5399, MS8931
Phoenix, AZ 85072-3999

Robert Hammond
Arizona State University East
6001 S. Power Rd.
Bldg. 539
Mesa, AZ 85206

Edward C. Kern
Ascension Technology, Inc.
P.O. Box 6314
Lincoln, MA 01773-6314

Greg Kern
Ascension Technology, Inc.
4700 Sterling Drive
Unit #
Boulder, CO 80301

Rick Lawrence
AVO International
P.O. Box 9007
Valley Forge, PA 19485-1007

Glenn Campbell
Babcock & Wilcox
P.O. Box 785
Lynchburg, VA 24505

Richard L. Hockney
Beacon Power Corp.
6 Gill St.
Woburn Industrial Park
Woburn, MA 01801-1721

Michael L. Bergey
Bergey Windpower
2001 Priestley Avenue
Norman, OK 73069

Klaus Kraemer
Berliner Kraft und Licht (BEWAG)
Bewag AG
Energy Planning & Trading
D- 12432 Berlin,
GERMANY

Massoud Assefpour
BHP Research & Tech Dev.
600 Bourke Street
Melbourne Victoria, 3000
AUSTRALIA

Samuel B. Wright
Boeing
Inform., Space & Defense Sys.
P.O. Box 3999 MS 82-97
Seattle, WA 98124-2499

Gerald W. Braun
BP Solarex
630 Solarex Court
Frederick, MD 21703

Salim Jabbour
Business Management Consulting
24704 Voorhees Drive
Los Altos Hills, CA 94022

Dr. Les Holden
C&D Charter Pwr. Systems, Inc.
Washington & Cherry Sts.
Conshohocken, PA 19428

Larry S. Meisner
C&D Powercom
1400 Union Meeting Road
P.O. Box 3053
Blue Bell, PA 19422-0858

Dr. Sudhan S. Misra
C&D Technologies
Washington & Cherry Streets
Conshohocken, PA 19428

Jon Edwards
California Energy Commission
1516 Ninth Street, MS-46
Sacramento, CA 95814

J. Holmes
California State Air Resc. Board
Research Division
P.O. Box 2815
Sacramento, CA 95812

Pramod P. Kulkarni
California Energy Commission
Research & Dev. Office
1516 9th Street, MS43
Sacramento, CA 95814-5512

Rod Boucher
Calpine Corporation
50 W. San Fernando
Suite 550
San Jose, CA 95113

Tom Lovas
Chugach Elec. Association, Inc.
5601 Minnesota Dr.
P.O. Box 196300
Anchorage, AK 99519-6300

John Cooley
Chugach Elec. Association, Inc.
P.O. Box 196300
Anchorage, AK 99519-6300

M. Lebow
Consolidated Edison
4 Irving Place
New York, NY 10003

N. Tai
Consolidated Edison
4 Irving Place
New York, NY 10003

R. Stack
Corn Belt Electric Cooperative
P.O. Box 816
Bloomington, IL 61702

R. B. Sloan
Crescent EMC
P.O. Box 1831
Statesville, NC 28687

J. Michael Hinga
Delphi Energy & Engine
Management Systems
P.O. Box 502650
Indianapolis, IN 46250

Bob Galyen
Delphi Energy. & Engine
Management Systems
P.O. Box 502650
Indianapolis, IN 46250

Jim Daley
Department of Energy
1000 Independence Ave. SW
EE-12 FORSTL
Washington, DC 20585

Dan T. Ton
Department of Energy
1000 Independence Ave. SW
EE-11 FORSTL
Washington, DC 20585

James E. Rannels
Department of Energy
1000 Independence Ave. SW
EE-11 FORSTL
Washington, DC 20585-0121

Dan Sanchez
Department of Energy
Albuquerque Operations Office
P.O. Box 5400
Albuquerque, NM 87185

Mark B. Ginsberg
Department of Energy
1000 Independence Ave. SW
EE-90 FORSTL 5E-052
Washington, DC 20585

Alex O. Bulawka
Department of Energy
1000 Independence Ave. SW
EE-11 FORSTL
Washington, DC 20585

Tien Q. Duong
Department of Energy
1000 Independence Ave. SW
EE-32 FORSTL, Rm. 5G-030
Washington, DC 20585

J. A. Mazer
Department of Energy
1000 Independence Ave. SW
EE-11 FORSTL
Washington, DC 20585

J. P. Archibald
Department of Energy
1000 Independence Ave. SW
EE-90 FORSTL
Washington, DC 20585

Richard J. King
Department of Energy
1000 Independence Ave. SW
EE-11 FORSTL, 5H-095
Washington, DC 20585

Russ Eaton
Department of Energy
Golden Field Office
1617 Cole Blvd., Bldg. 17
Golden, CO 80401

Kenneth L. Heitner
Department of Energy
1000 Independence Ave. SW
EE-32 FORSTL, Rm. 5G-030
Washington, DC 20585

Neal Rossmeissl
Department of Energy
1000 Independence Ave. SW
EE-13 FORSTL
Washington, DC 20585

Allan Jelacic
Department of Energy
1000 Independence Ave. SW
EE-12 FORSTL
Washington, DC 20585

R. Eynon
Department of Energy
1000 Independence Ave. SW
EI-821 FORSTL
Washington, DC 20585

Alex G. Crawley
Department of Energy
1000 Independence Ave. SW
EE-90 FORSTL
Washington, DC 20585

Philip N. Overholt
Department of Energy
1000 Independence Ave. SW
EE-11 FORSTL
Washington, DC 20585-0121

Benjamin A. Finzel
Department of Energy
1000 Independence Ave. SW
EE-1 FORSTL
Washington, DC 20585

Jack Cadogan
Department of Energy
1000 Independence Ave. SW
EE-11 FORSTL
Washington, DC 20585

Joe Galdo
Department of Energy
1000 Independence Ave. SW
EE-10 FORSTL
Washington, DC 20585

Paul Maupin
Department of Energy
19901 Germantown Rd
ER-14 E-422
Germantown, MD 20874-1290

Dr. Imre Gyuk
Department of Energy
1000 Independence Ave. SW
EE-14 FORSTL
Washington, DC 20585

Tina M. Kaarsberg
Department of Energy
1000 Independence Ave SW
EE-10 FORSTL
Washington, DC 20585

Dan W. Reicher
Department of Energy
1000 Independence Ave. SW
EE-1 FORSTL
Washington, DC 20585

Peter R. Goldman
Department of Energy
1000 Independence Ave. SW
EE-12 FORSTL
Washington, DC 20585

Robert K. Dixon
Department of Energy
1000 Independence Ave. SW
EE-10 FORSTL
Washington, DC 20585F

William P. Parks, Jr.
Department of Energy
1000 Independence Ave. SW
EE-10 FORSTL
Washington, DC 20585

Gary D. Burch
Department of Energy
1000 Independence Ave SW
EE-11 FORSTL
Washington, DC 20585

Lynne M. Gillette
Department of Energy
1000 Independence Ave. SW
EE-11 FORSTL
Washington, DC 20585

Sigmund Gronich
Department of Energy
1000 Independence Ave. SW
EE-15 FORSTL
Washington, DC 20585

Patricia A. Hoffman
Department of Energy
1000 Independence Ave. SW
EE-22 FORSTL
Washington, DC 20585

Joseph J. Iannucci (5)
Distributed Utility Associates
1062 Concannon Blvd.
Livermore, CA 94550

Steven Whisenant
Duke Power Company
P.O. Box 1006
Charlotte, NC 28201

Alan Collinson
EA Technology Limited
Chester CH1 6ES
Capenhurst, England
UNITED KINGDOM

Jim DeGruson
Eagle-Picher Industries. Inc.
C & Porter Street
Joplin, MO 64802

M. Stanton
East Penn Manufact. Co., Inc.
Deka Road
Lyon Station, PA 19536

Daniel R. Bruck
ECG Consulting Group, Inc.
55-6 Woodlake Road
Albany, NY 12203

Steve Eckroad
Electric Power Research Institute
P.O. Box 10412
Palo Alto, CA 94303-0813

Robert Schainker
Electric Power Research Institute
P.O. Box 10412
Palo Alto, CA 94303-0813

Steve Chapel
Electric Power Research Institute
P.O. Box 10412
Palo Alto, CA 94303-0813

Phillip C. Symons
Electrochemical Engineering
Consultants, Inc.
1295 Kelly Park Circle
Morgan Hill, CA 95037

Dave Feder
Electrochemical Energy
Storage Systems, Inc.
35 Ridgedale Avenue
Madison, NJ 07940

Michael Dodge
Electrosource
P.O. Box 7115
Loveland, CO 80537

Harald Haegermark
Elforsk-Swedish Elec Utilities R&D Co
Elforsk AB
Stockholm, S-101 53
Sweden

Chuck Whitaker
Endecon Engineering
2500 Old Crow Canyon Road
Suite 220
San Ramon, CA 94583

Mindi J. Farber De Anda
Energetics, Inc.
501 School Street SW
Suite 500
Washington, DC 20024

Howard Lowitt
Energetics, Inc.
7164 Gateway Drive
Columbia, MD 21046

Rich Scheer
Energetics, Inc.
501 School Street SW
Suite 500
Washington, DC 20024

Laura C. Johnson
Energetics, Inc.
7164 Gateway Drive
Columbia, MD 21046

Ed Skolnik
Energetics, Inc.
501 School Street SW
Suite 500
Washington, DC 20024

Greg J. Ball
Energy & Env. Economics, Inc.
353 Sacramento Street
Suite 1540
San Francisco, CA 94111

Amber Gray-Fenner
Energy Communications Consulting
7204 Marigot Rd. NW
Albuquerque, NM 87120

Dale Butler
EnerTec Pty. Ltd.
349 Coronation Drive
PO Box 1139, Milton BC Old 4044
Auchenflower, Queensland, 4066
AUSTRALIA

Robert Duval
EnerVision
P,O, Box 450789
Atlanta, GA 31145-0789

David H. DaCosta
Ergenics, Inc.
247 Margaret King Avenue
Ringwood, NJ 07456

Erik Hennig
EUS GmbH
Munscheidst 14
Gelsenkirchen, D-45886
GERMANY

John Breckenridge
Exide Electronics
8609 Six Forks Road
Raleigh, NC 27615

J. Mills
Firing Circuits, Inc.
P.O. Box 2007
Norwalk, CT 06852-2007

James P. Dunlop
Florida Solar Energy Center
1679 Clearlake Road
Cocoa, FL 32922-5703

Steven Kraft
Frost & Sullivan
2525 Charleston Road
Mountain View, CA 94043

Dave Coleman
Frost & Sullivan
2525 Charleston Road
Mountain View, CA 94043

Bob Zrebiec
GE Industrial & Pwr. Services
640 Freedom Business Center
King of Prussia, PA 19046

Nick Miller
General Electric Company
1 River Road
Building 2, Room 605
Schenectady, NY 12345

Declan Daly
General Electric Drive Systems
1501 Roanoke Blvd.
Salem, VA 24153

Gerry Woolf
Gerry Woolf Associates
17 Westmeston Avenue
Rottingdean, East Sussex, BN2 8AL
UNITED KINGDOM

Anthony B. LaConti
Giner, Inc.
14 Spring Street
Waltham, MA 02451-4497

George Hunt
GNB Tech. Ind. Battery Co.
Woodlake Corporate Park
829 Parkview Blvd.
Lombard, IL 60148-3249

Joe Szymborski
GNB Tech. Ind. Battery Co.
Woodlake Corporate Park
829 Parkview Blvd.
Lombard, IL 60148-3249

Sanjay Deshpande'
GNB Technologies
Woodlake Corporate Park
829 Parkview Blvd.
Lombard, IL 60148-3249

John Boehm
GNB Tech. Ind. Battery Co.
Woodlake Corporate Park
829 Parkview Blvd.
Lombard, IL 60148-3249

Steven Haagensen
Golden Valley Elec. Assoc., Inc.
758 Illinois Street
P.O. Box 71249
Fairbanks, AK 99701

Ben Norris
Gridwise Engineering Company
121 Starlight Place
Danville, CA 94526

Clyde Nagata
Hawaii Electric Light Co.
P.O. Box 1027
Hilo, HI 96720

George H. Nolin
HL&P Energy Services
P.O. Box 4300
Houston, TX 77210-4300

Carl D. Parker
ILZRO
2525 Meridian Parkway
P.O. Box 12036
Research Triangle Park, NC 27709

Patrick Moseley
ILZRO
2525 Meridian Parkway
P.O. Box 12036
Research Triangle Park, NC 27709

Jerome F. Cole
ILZRO
2525 Meridian Parkway
PO Box 12036
Research Triangle Park, NC 27709

Ron Myers
Imperial Oil Research Centre
3535 Research Road NW
Room 2E-123
Calgary, Alberta, T2L 2K8
CANADA

Ken Belfer
Innovative Power Sources
1419 Via Jon Jose Road
Alamo, CA 94507

Albert R. Landgrebe
Int'l Electrochemical Sys & Technology
B14 Sussex Lane
Long Neck, DE 19966

David Warar
Intercon Limited
6865 Lincoln Avenue
Lincolnwood, IL 60646

A. Kamal Kalafala
Intermagnetics General Corp.
450 Old Niskayuna Road
P.O. Box 461
Latham, NY 12110-0461

John Neal
Internationl Business & Tech.
Services, Inc.
9220 Tayloes Neck Road
Nanjemoy, MD 20662

Imelda G. Francis
Just Do IT
21658 W. Ravine
Lake Zurich, IL 60047

Gerard H. C. M. Thijssen
KEMA T&D Power
Utrechtseweg 310
P.O. Box 9035
ET, Ernhem, 6800
The Netherlands

Elton Cairns
Lawrence Berkeley Nat'l Lab
University of California
One Cyclotron Road
Berkeley, CA 94720

Frank McLarnon
Lawrence Berkeley National Lab
University of California
One Cyclotron Road
Berkeley, CA 94720

Kim Kinoshita
Lawrence Berkeley Nat'l Lab
University of California
One Cyclotron Road
Berkeley, CA 94720

J. Ray Smith
Lawrence Livermore Nat'l Lab
University of California
P.O. Box 808, L-641
Livermore, CA 94551

Susan M. Schoenung (5)
Longitude 122 West, Inc.
1010 Doyle Street
Suite 10
Menlo Park, CA 94025

Joseph Morabito
Lucent Technologies, Inc.
600 Mountain View Ave.
P.O. Box 636
Murray Hill, NJ 07974-0636

Cecilia Y. Mak
Lucent Technologies
3000 Skyline Drive
Room 855
Mesquite, TX 75149-1802

Stephen R. Connors
Massachusetts Inst of Tech
The Energy Laboratory
Rm E40-465
Cambridge, MA 02139-4307

Floyd Russell
Metlakatla Power & Light
P.O. Box 359
3.5 Mile Airport Road
Metlakatla, AK 99926

D. Nowack
Micron Corporation
158 Orchard Lane
Winchester, TN 37398

Anthony Price
National Power PLC
Harwell Int'l Business Ctr.
Harwell, Didcot, OX11 0QA
UNITED KINGDOM

Steven P. Lindenberg
National Rural Elec Cooperative Assoc.
4301 Wilson Blvd.
SSER9-207
Arlington, VA 22203-1860

Bill Brooks
NC Solar Center
Corner of Gorman & Western
Box 7401 NCSU
Raleigh, NC 27695-740

Andrew L. Rosenthal
New Mexico State University
Southwest Tech. Dev. Institute
Box 30001/Dept. 3SOL
Las Cruces, NM 88003-8001

Bart Chezar
New York Power Authority
1633 Broadway
New York, NY 10019

Denise Zurn
Northern States Power Co.
414 Nicollet Mall
Minneapolis, MN 55401

Jack Brown
NPA Technology
Two University Place
Suite 700
Durham, NC 27707

John Stoval
Oak Ridge National Laboratory
P.O. Box 2008
Bldg. 3147, MS-6070
Oak Ridge, TN 37831-6070

Robert Hawsey
Oak Ridge National Laboratory
P.O. Box 2008
Bldg. 3025, MS-6040
Oak Ridge, TN 37831-6040

James VanCoevering
Oak Ridge National Laboratory
P.O. Box 2008
Bldg. 3147, MS-6070
Oak Ridge, TN 37831-6070

Brendan Kirby
Oak Ridge National Laboratory
P.O. Box 2008
Bldg. 3147, MS-6070
Oak Ridge, TN 37831-6070

Douglas R. Danley
Orion Energy Corporation
10087 Tyler Place #5
Ijamsville, MD 21754

John DeStreese
Pacific Northwest Nat'l Lab
Battelle Blvd.
P.O. Box 999, K5-02
Richland, WA 99352

Daryl Brown
Pacific Northwest Nat'l Lab
Battelle Blvd. MS K8-07
P.O. Box 999
Richland, WA 99352

Thomas H. Schucan
Paul Scherrer Institut
CH - 5232 Villigen PSI
Switzerland

Brad Johnson
PEPCO
1900 Pennsylvania NW
Washington, DC 20068

Hans Meyer
Power Electronics Div S&C Electric
2010 Energy Drive
P.O. Box 879
East Troy, WI 53120

Stan Sostrom
POWER Engineers, Inc.
P.O. Box 777
3870 US Hwy 16
Newcastle, WY 82701

P. Prabhakara
Power Technologies, Inc.
1482 Erie Blvd.
P.O. Box 1058
Schenectady, NY 12301

Rick Winter
Powercell Corporation
6724 Preston Avenue
Suite C
Livermore, CA 94550

Reznor I. Orr
PowerCell Corporation
99 South Bedford Street
Suite 2
Burlington, MA 01803

Jerry Neal
Public Service Co. of New Mexico
Alvarado Square MS-BA52
Albuquerque, NM 87158

Roger Flynn
Public Service Co. of New Mexico
Alvarado Square MS-2838
Albuquerque, NM 87158

Wenceslao Torres
Puerto Rico Elec. Pwr. Authority
P.O. Box 364267
San Juan, PR 00936-4267

Norman Lindsay
Queensland Department of
Mines and Energy
G.P.O. Box 194
Brisbane, 4001
QLD. AUSTRALIA

J. Thompson
R&D Associates
2100 Washington Blvd.
Arlington, VA 22204-5706

Al Randall
Raytheon Eng. & Constructors
700 South Ash Street
P.O. Box 5888
Denver, CO 80217

K. Ferris
RMS Company
135 Post Office Rd.
South Salem, NY 10590-1106

George V. Fantozzi
S&C Electric Company
6601 North Ridge Blvd.
Chicago, IL 60626-3997

Jim McDowall
SAFT America, Inc.
3 Powdered Metal Drive
North Haven, CT 06473

Guy Chagnon
SAFT Research & Dev. Ctr.
107 Beaver Court
Cockeysville, MD 21030

Michael C. Saft
SAFT Research & Dev. Ctr.
107 Beaver Court
Cockeysville, MD 21030

G. E. "Ernie" Palomino
Salt River Project
P.O. Box 52025
MS PAB 357
Phoenix, AZ 85072-2025

Dr. Charles Feinstein
Santa Clara University
Dept. of Dec. & Info. Sciences
Leavey School of Bus. & Admin.
Santa Clara, CA 95053

Robert Reeves
Sentech, Inc.
9 Eaton Road
Troy, NY 12180

Kurt W. Klunder
Sentech, Inc.
4733 Bethesda Avenue
Suite 608
Bethesda, MD 20814

Rajat K. Sen
Sentech, Inc.
4733 Bethesda Avenue
Suite 608
Bethesda, MD 20814

Nicole Miller
Sentech, Inc.
4733 Bethesda Avenue
Suite 608
Bethesda, MD 20814

Clay Aldrich
Siemens Solar
4650 Adohr Lane
P.O. Box 6032
Camarillo, CA 93011

Deepak Divan
Soft Switching Technologies
2224 Evergreen Road
Suite 6
Middleton, WI 53562

Scott Sklar
Solar Energy Ind. Assoc. (SEIA)
1111 North 19th St
Suite 2604th Floor
Arlington, VA 22209

Naum Pinsky
Southern California Edison
2244 Walnut Grove Ave.
P.O. Box 800, Room 418
Rosemead, CA 91770

K. Vakhshoorzadeh
Southern Company Services, Inc.
600 North 18th Street
P.O. Box 2625
Birmingham, AL 35202-2625

Richard N. Schweinberg
Southern California Edison
6070 N. Irwindale Avenue
Suite I
Irwindale, CA 91702

James T. Collins
Southern Electric Exchange
3379 Peachtree Road NE
Suite 250
Atlanta, GA 30326

C. Seitz
SRI International
333 Ravenswood Avenue
Menlo Park, CA 94025

George Zink
Stored Energy Engineering
7601 E. 88th Place
Indianapolis, IN 46256

Bob Bish
Stored Energy Engineering
7601 E. 88th Place
Indianapolis, IN 46256

Jon Hurwitch
Switch Technologies
4733 Bethesda Avenue
Suite 608
Bethesda, MD 20814

Terri Hensley
Tampa Electric Company
P.O. Box 111
Tampa, FL 33601-0111

Harold Gotschall
Technology Insights
6540 Lusk Blvd.
Suite C-102
San Diego, CA 92121

Thomas J. Jenkin
The Brattle Group
44 Brattle Street
Cambridge, MA 02138-3736

Haukur Asgeirsson
The Detroit Edison Company
2000 2nd Ave.
435 SB
Detroit, MI 48226-1279

rles E. Bakis
Pennsylvania State University
Hammond Building
rsity Park, PA 16802

Michael Orians
The Solar Connection
P.O. Box 1138
Morro Bay, CA 93443

Tom Anyos
The Technology Group, Inc.
63 Linden Avenue
Atherton, CA 94027-2161

Bill Roppenecker
Trace Engineering Division
5916 195th Northeast
Arlington, WA 98223

Bill Erdman
Trace Technologies
161G South Vasco Road
P.O. Box 5049
Livermore, CA 94550

Michael Behnke
Trace Technologies
161G South Vasco Road
P.O. Box 5049
Livermore, CA 94550

Donald A. Bender
Trinity Flywheel Power
6724D Preston Avenue
Livermore, CA 94550

Jim Drizos
Trojan Battery Company
12380 Clark Street
Santa Fe Springs, CA 90670

James Fangue
TU Electric
R&D Programs
P.O. Box 970
Fort Worth, TX 76101

Paul C. Klimas
U.S. Agency for Intn'l Development
Center for Environment
Washington, DC 20523-3800

Dr. Gerald P. Ceasar
U.S. Department of Commerce
NIST/ATP
Bldg 101, Room 623
Gaithersburg, MD 20899

Henry Chase
U.S. Flywheel Systems
1125-A Business Center Circle
Newbury Park, CA 91320

Wayne Taylor
U.S. Navy
Code 83B000D, NAWS
China Lake, CA 93555

Edward Beardsworth
UFTO
951 Lincoln Avenue
Palo Alto, CA 94301-3041

Richard Lemmons
United States Air Force
OO-ALC/LIPC
6040 Gum Lane
Hill Air Force Base, UT 84056-5825

John Herbst
University of Texas at Austin
J.J. Pickel Research Campus
Mail Code R7000
Austin, TX 78712

Max Anderson
University of Missouri - Rolla
112 Electrical Eng. Bldg.
Rolla, MO 65401-0249

Mariesa L. Crow
University of Missouri-Rolla
233 EECH
Rolla, MO 65409-0040

G. Alan Palin
Urenco (Capenhurst) Ltd.
Capenhurst, Chester, CH1 6ER
UNITED KINGDOM

Marnell Hoover
US Air Force
OO-ALC/LIPC
6040 Gum
Hill Air Force Base, UT 84056-5825

Steve Hester
Utility Photo Voltaic Group
1800 M Street NW
Washington, DC 20036-5802

Mike Stern
Utility Power Group
21250 Califa Street
Suite 111
Woodland Hills, CA 91367-5029

Rick Ubaldi
VEDCO Energy
12 Agatha Lane
Wayne, NJ 07470

Gary Verno
Virginia Power
Innsbrook Technical Center
5000 Dominion Blvd.
Glen Ellen, VA 23233

Alex Q. Huang
Virginia Polytechnic Instit. & State Uni
Virginia Power Electronics Center
672 Whittemore Hall
Blacksburg, VA 24061

Randy Bevin
Walt Disney World
Design and Eng'g
P.O. Box 10,000
Lake Buena Vista, FL 32830-1000

Gerald J. Keane
Westinghouse Elec. Corp.
Energy Management Division
4400 Alafaya Trail
Orlando, FL 32826-2399

Howard Saunders
Westinghouse STC
1310 Beulah Road
Pittsburgh, PA 15235

Frank Tarantino
Yuasa, Inc.
2366 Bernville Road
P.O. Box 14145
Reading, PA 19612-4145

Nicholas J. Magnani
Yuasa, Inc.
2366 Bernville Road
P.O. Box 14145
Reading, PA 19612-4145

Gene Cook
Yuasa-Exide, Inc.
666 Edison Furlong Road
Furlong, PA 18925

R. Kristiansen
Yuasa-Exide, Inc.
35 Loch Lomond Lane
Middleton, NY 10941-1421

Henry W. Zaininger
Zaininger Engineering Co., Inc.
9959 Granite Crest Court
Granite Bay, CA 95746

Robert J. Parry
ZBB Technologies, Inc.
11607 West Dearbourn Ave.
Wauwatosa, WI 53226-3961

MS-0340/01832	Jeff W. Braithwaite
MS-0953/02500	William E. Alzheimer
MS-0953/02501	J. Thomas Cutchen
MS-0613/02521	Daniel H. Doughty
MS-0613/02521	Terry M. Unkelhaeuser
MS-0613/02521	Rudolph G. Jungst
MS-0613/02522	Paul C. Butler
MS-0614/02523	Robert W. Bickes, Jr.
MS-0613/02525	Garth P. Corey
MS-0613/02525	Gustavo P. Rodriguez
MS-0613/02525	James T. Crow
MS-0613/02525	Nancy H. Clark
MS-0613/02525	Stanley Atcitty
MS-0613/02525	John D. Boyes (10)
MS-0741/06200	Samuel G. Varnado
MS-0704/06201	Abbas A. Akhil
MS-0455/06201	Marjorie L. Tatro
MS-0708/06214	Henry M. Dodd
MS-0753/06218	Christopher P. Cameron
MS-0753/06218	Russell H. Bonn
MS-0753/06218	Thomas D. Hund
MS-0753/06218	John W. Stevens
MS-0753/06218	Ward I. Bower
MS-9403/08723	James C. F. Wang
MS-9018/08940-2	Central Technical Files
MS-0612/09612	Review & Approval For DOE/OSTI (1)
MS-0899/09616	Technical Library (2)