SANDIA REPORT

SAND98–1261
Unlimited Release
Printed June 1998

AT-400A Compliance Test Report

R. E. Glass

Prepared by
Sandia National Laboratories
Albuquerque, New Mexico 87185 and Livermore, California 94550

Sandia is a multiprogram laboratory operated by Sandia Corporation, a Lockheed Martin Company, for the United States Department of Energy under Contract DE-AC04-94AL85000.

Approved for public release; further dissemination unlimited.

Sandia National Laboratories

Issued by Sandia National Laboratories, operated for the United States Department of Energy by Sandia Corporation.
NOTICE: This report was prepared as an account of work sponsored by an agency of the United States Government. Neither the United States Government nor any agency thereof, nor any of their employees, nor any of their contractors, subcontractors, or their employees, makes any warranty, express or implied, or assumes any legal liability or responsibility for the accuracy, completeness, or usefulness of any information, apparatus, product, or process disclosed, or represents that its use would not infringe privately owned rights. Reference herein to any specific commercial product, process, or service by trade name, trademark, manufacturer, or otherwise, does not necessarily constitute or imply its endorsement, recommendation, or favoring by the United States Government, any agency thereof, or any of their contractors or subcontractors. The views and opinions expressed herein do not necessarily state or reflect those of the United States Government, any agency thereof, or any of their contractors.

Printed in the United States of America. This report has been reproduced directly from the best available copy.

Available to DOE and DOE contractors from
Office of Scientific and Technical Information
P.O. Box 62
Oak Ridge, TN 37831

Prices available from (615) 576-8401, FTS 626-8401

Available to the public from
National Technical Information Service
U.S. Department of Commerce
5285 Port Royal Rd
Springfield, VA 22161

NTIS price codes
Printed copy: A03
Microfiche copy: A01

SAND98-1261
Unlimited Release
Printed June 1998

AT-400A Compliance Test Report

R. E. Glass
WMD Container Systems
Sandia National Laboratories
P. O. Box 5800
Albuquerque, NM 87185-0483

Abstract

In 1993 Sandia was directed to design containers for the long-term storage and transport of nuclear weapons origin fissile material. This program was undertaken at the direction of the US Department of Energy and in cooperation with Lawrence Livermore National Laboratory and Los Alamos National Laboratory. Lawrence Livermore National Laboratory and Los Alamos National Laboratory were tasked with developing the internal fixturing for the contents. The hardware is being supplied by AlliedSignal Federal Manufacturing and Technologies, and the packaging process has been developed at Mason and Hanger Corporation's Pantex Plant. The unique challenge was to design a container that could be sealed with the fissile material contents; and, anytime during the next 50 years, the container could be transported with only the need for the pre-shipment leak test. This required a rigorous design capable of meeting the long-term storage and transportation requirements.

This report addresses the final testing that was undertaken to demonstrate compliance with US radioactive materials transport regulations.

Table of Contents

I. Background 4
II. Pretest Inspection 5
III. Hypothetical Accident Sequence 6
Test Description 6
Results 9
Photographic Record and Visual Inspection 10
Dimensional Inspection Data 12
Temperature Data 15
Leak Test Results 16
Weight Data 16
IV. Normal Conditions Tests 17
Test Description 17
Results 19
Photographic Record and Visual Inspection 19
Dimensional Inspection Data 22
Leak Test Results 25
V. Conclusion 25
VI. References 25
Appendix A: Test Hardware Pedigree 26
Appendix B: List of Test Procedures 37
Appendix C: Pantex Procedures 39

Table of Figures

Figure 1: Overpack Inspection Locations 5
Figure 2: Containment Vessel Inspection Locations 6
Figure 3: Insert Inspection Locations 6
Figure 4: Temperature Indicator Locations 8
Figure 5: Post 4-ft Drop Test 10
Figure 6: Post Center-of-Gravity Over Corner 30-ft Drop Test 11
Figure 7: Post Dynamic Crush Test - Lid View 11
Figure 8: Post Dynamic Crush Test - Bottom View 12
Figure 9: Overpack End Temperatures 15
Figure 10: Overpack Side Temperatures 16
Figure 11: Center-of-Gravity Over Corner Drop Test 21
Figure 12: Post Center-of-Gravity Over Corner Drop Test 21

Table of Tables

Table 1: SCU-6 Test Sequence 7
Table 2: Pre- and Post Test Temperatures 8
Table 3: Overpack Inspection Data 12
Table 4: Containment Vessel Inspection Data 13
Table 5: Gaps between Transition Flange and Lower Shell 14
Table 6: Gaps between Lower Jaw and Lower Shell 14
Table 7: Gaps between Preload Spring and Upper Shell 14
Table 8: Transition Flange Thickness 14
Table 9: Transition Flange Height 14
Table 10 : SCU-7B Test Sequence 17
Table 11: Timing for Water Spray/Drop Tests 18
Table 12: Overpack Inspection Data 22
Table 13: Insert -1 Inspection Data 22
Table 14: Insert -2 Inspection Data 23
Table 15: Containment Vessel Inspection Data 24
Table 16: Gaps between Transition Flange and Lower Shell 24
Table 17: Gaps between Lower Jaw and Lower Shell 24
Table 18: Gaps between Preload Spring and Upper Shell 25
Table 19: Transition Flange Thickness 25
Table 20: Transition Flange Height 25

I. Background

Prior to these two test sequences, substantial testing had been performed to validate the performance of the AT-400A design both as a storage and transport container. These tests included development and compliance tests designated as Evaluation of Containment Vessel (ECV), System Evaluation Units (SEU), Engineering Evaluation Units (EEU), and System Compliance Units (SCU).

The ECV tests provided data for the development of the internal support fixture and data to establish the margin of safety for the containment vessel. The data from the ECV tests demonstrated that the bare containment vessel would survive drop, static crush and dynamic crush events without loss of containment.

The SEU tests provided data for the development of the internal support fixture and also provided validation data for the final design. The final validation data included responses of the packaging to the normal conditions impact and thermal environments. The SEU sequence used complete AT-400A container systems.

The EEU tests were development units that were used to establish margins of safety and to evaluate preliminary concepts. Of special note in this sequence was EEU-4 which subjected a bare containment vessel with reduced weld section to a sequence of three dynamic crush tests. This test demonstrated that the weld used in the AT-400A had significant margin against failure.

The SCU tests were designed to support the Safety Analysis Report by providing data on the response of the AT-400A system to the normal and hypothetical accident sequence tests specified in Title 10, Code of Federal Regulations, Part 71 (10CFR71). The initial tests were undertaken with prototype hardware. SCU-2 and SCU-4 were each subjected to three 30-ft drops, three dynamic crush tests, three puncture tests and an all-engulfing pool fire test. These tests that exceeded regulatory requirements were performed to demonstrate that there was adequate margin to cover the requirement that the tests occur in “the most damaging orientation”. This report documents the two tests that were performed with the final internal fixture, production quality hardware and with Pantex produced assemblies.

The SCU-6 and SCU-7B test sequences that used Pantex produced assemblies demonstrated that the AT-400A container design meets the hypothetical accident and normal conditions aspects of the requirements of 10CFR71 and AT-400A Container Program Requirements (SS706212).

To demonstrate compliance with the hypothetical accident conditions sequence, SCU-6 was subjected to an immersion test and a 4-ft drop test followed by the hypothetical accident sequence. The result was that the containment vessel remained leaktight, the containment vessel temperature was less than 600°F and the fixture integrity was maintained.

To demonstrate compliance with the normal conditions requirements, SCU-7B was subjected to (1) water spray, (2) compression, (3) 4-ft free drop, (4) penetration, (5) vibration and (6)

corrosion tests. The result was that the containment vessel remained leaktight, the fixture integrity was maintained and no significant corrosion was present.

II. Pretest Inspection

Dimensional inspections were taken per the AT-400A Container Inspection Procedure for comparison with the post-test results. Figures 1,2 and 3 show the inspection locations. The results of these dimensional inspections are reported in the Results sections. The girth weld and tube crimp and weld processes were performed at Pantex using the equipment and procedures that were planned for use in pit packaging. These procedures are listed in Appendix C.

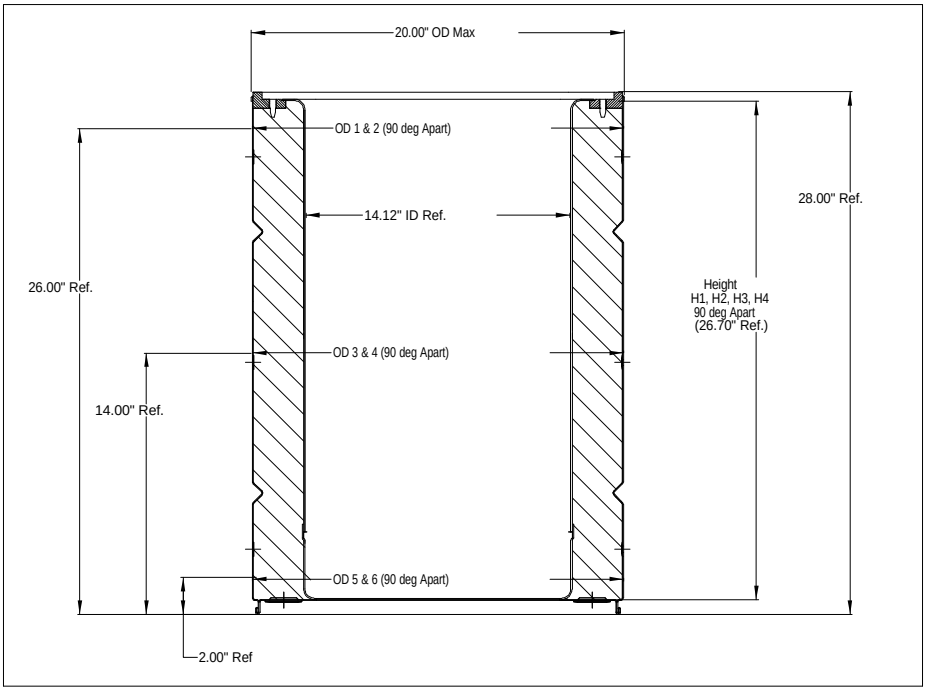

Figure 1: Overpack Inspection Locations

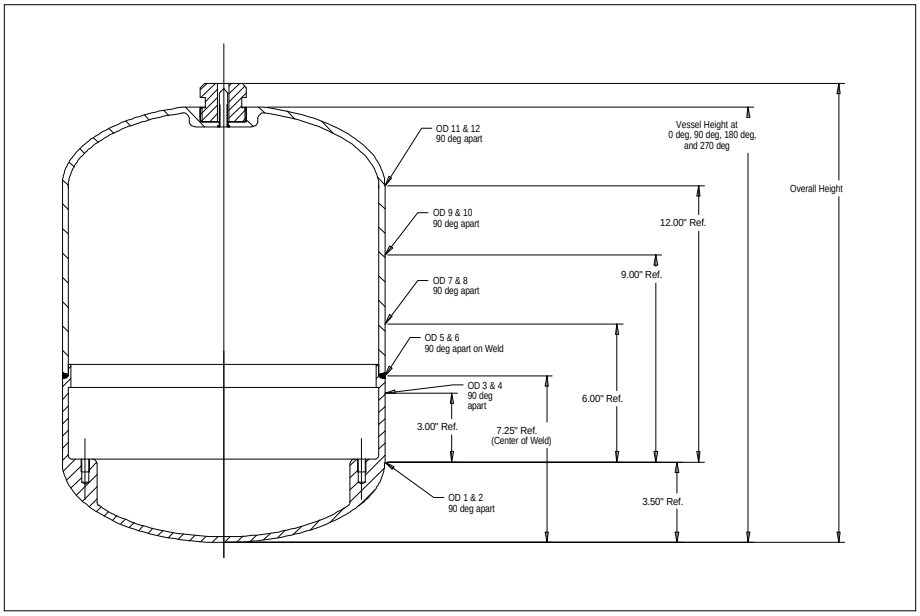

Figure 2: Containment Vessel Inspection Locations

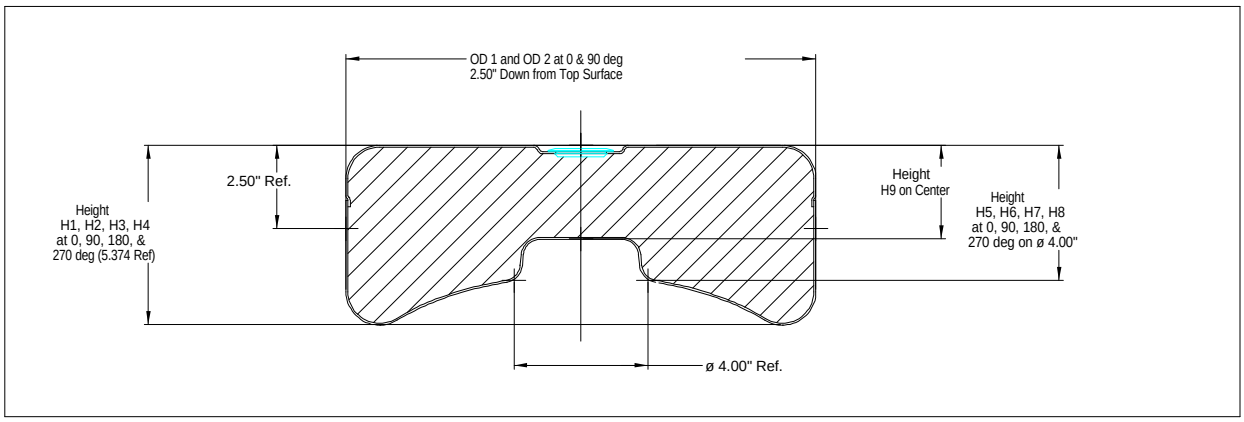

Figure 3: Insert Inspection Locations

III. Hypothetical Accident Sequence

Test Description

The SCU-6 test sequence is specified in the AT-400A Container Test Plan and consisted of the following sequence of tests: (1) immersion, (2) 4-ft drop, (3) 30-ft drop, (4) dynamic crush, (5) puncture and (6) pool fire. The drop, dynamic crush and puncture tests were performed with the container colder than -20°F. The pool fire was performed after the damaged container was heated to a temperature greater than 140°F to simulate the effect of the radioactive decay of the contents and storage in still air at 100°F. The tests used simulated contents (Shelf Life Mock Pit Assembly - Drawing No. 258480) to bound the mass of the proposed contents. This test sequence is summarized in Table 1.

Table 1: SCU-6 Test Sequence

Test	Orientation	Initial Temperature
Immersion	N/A	Ambient
4 ft Drop	Lid Down	<-20°F
30 ft Drop	CGOC	<-20°F
Crush	Side	<-20°F
Puncture	Lid gap	<-20°F
Pool Fire	Vertical	>140°F

The first step was to ensure that the hardware adequately represented the design. The pedigree given in Appendix A demonstrates the adequacy of the hardware. The pedigree is based on dimensional inspections, use of qualified processes and a review of material certifications. Where deviations from the design exist, the appropriate design agency reviewed the deviations and determined that the deviations would not significantly effect the test results.

Next, the container was assembled according to the AT-400A Container Assembly Procedure. The data required for this sequence of tests are the deformations, the maximum containment vessel temperature and the post-test sequence leak rate. To obtain the vessel temperature, passive thermal indicators were installed at the locations given in Figure 4. Note that the temperature indicators located adjacent to the girth weld location were used to determine a lower bound on the weld temperatures and were not to measure the temperature resulting from the pool fire test. A leak test was performed at the completion of the hypothetical accident sequence testing to obtain the post-test leak rate. The assembled container at the initiation of testing weighed 331.5 lb.

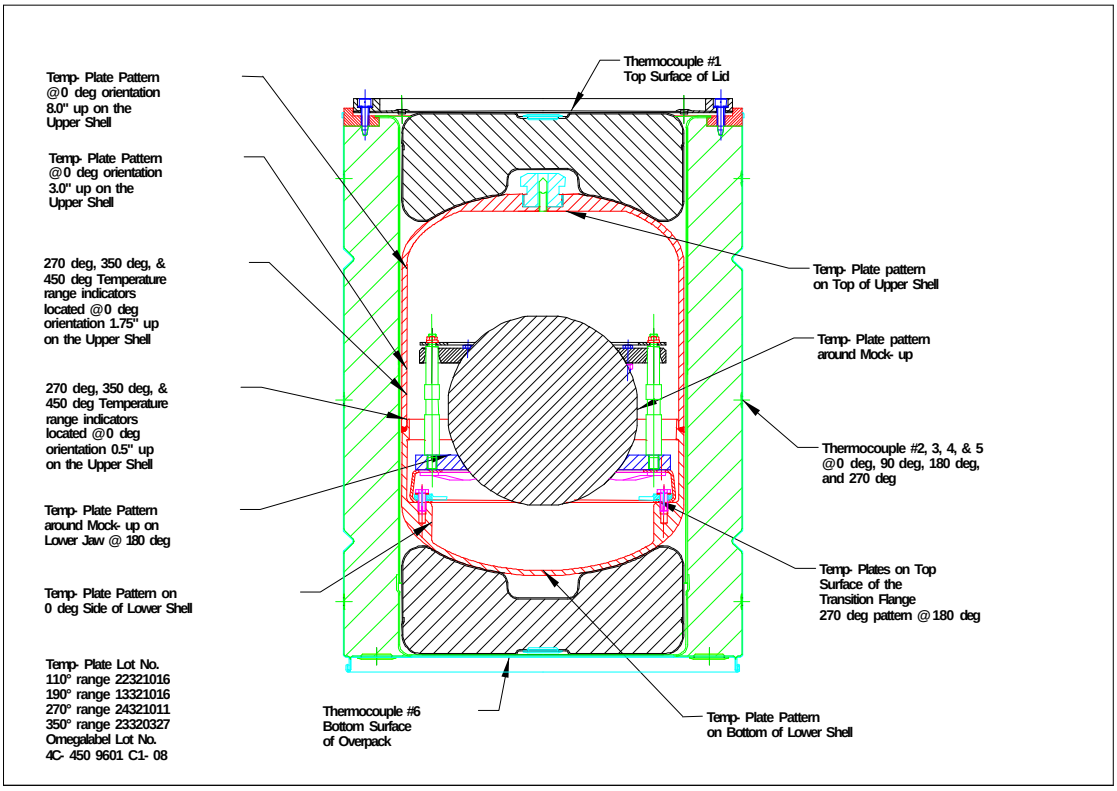

Figure 4: Temperature Indicator Locations

Following assembly and inspection, the container was subjected to the immersion test. The immersion test, as specified in the AT-400A Container Immersion Test Procedure consists of placing the container in a water filled pressure vessel and pressurizing the water to a minimum of 22 psi to simulate a 50 ft immersion. The container is held in that condition for a minimum of 24 hours. The actual test pressure was maintained at 23.6 psi for 24 hours and five minutes. The container was then removed from the pressure vessel.

Following immersion, the container was placed in a climatic chamber that was maintained at a temperature of -50°F for four days. Following impact testing or transport the cold temperature was reestablished in a portable climatic chamber. Temperatures on the skin of the container were measured just prior to impact and in all cases the temperatures remained below -20°F. The pre- and post-test temperatures for each test in the sequence are given in Table 2.

Table 2: Pre- and Post Test Temperatures

Test	Pre-Test Temperature, °F	Post-Test Temperature, °F
Immersion	Ambient	Ambient
Normal Drop (4 ft)	-58	-31
Drop (30 ft)	-53	-33
Dynamic Crush	-56	-33
Puncture	-67	-26
Pool Fire	175	Ambient

The first impact test was the 4-ft drop in the lid down orientation. This test was performed using the AT-400A Container Normal Drop Test Procedure. While this test is not required as part of the hypothetical accident sequence, the pit support fixture was expected to be permanently deformed as a result of this test. Further, the AT-400A Container Program Requirements specify that fixture integrity is required following the hypothetical accident sequence. As a result, the 4-ft drop test was performed to ensure that the test configuration at the start of the hypothetical accident sequence accounted for possible prior damage to the pit support fixture during normal handling.

The second impact test was the 30-ft drop performed according to the AT-400A Container Drop Test Procedure. This is the first of the hypothetical accident sequence tests. The container was dropped 30 ft onto the unyielding target at Sandia's 185-ft drop tower. The orientation was lid down, center-of-gravity over corner with impact at the 0° circumferential location.

The third impact test was the dynamic crush test performed according to the AT-400A Dynamic Crush Test Procedure. The container was oriented on its side with the 0° line on the target. In this test, an 1100-lb steel plate is dropped from a height of 30 ft striking the container in a horizontal position.

The fourth impact test was the puncture test. The AT-400A Container Puncture Test Procedure specifies this test as consisting of dropping the container from a height of 40 in onto a 6 in diameter steel bar. The test orientation was center-of-gravity over the lid corner. The intent was to assault the lid and attempt to fail additional bolts in shear.

The final test in the sequence was the all-engulfing pool fire test. For this test, the AT-400A Container Pool Fire Test Procedure dictates that the container is preheated for four days at 185°F. The container was supported on an open steel support structure approximately 3 ft above the fuel source. The container was also positioned such that horizontally it was between 3 and 10 ft from the edge of the fuel source. The fuel was a mixture of JP-4 and JP-8. When the measured wind speed was less than 6.5 ft/s, the fuel was ignited and allowed to burn without interruption for 30 minutes. The overpack was instrumented with six thermocouples to monitor fire conditions. Four of the thermocouples were placed every 90° around the circumference of the container at mid-height. The other two thermocouples were placed on each end of the container.

At the completion of the test sequence, the containment vessel was leak tested according to the methods and requirements specified in ANSI N14.5 and in the AT-400A Container Pressurized Envelope Helium Leak Test Procedure.

Results

The test results demonstrate compliance with the accident resistance requirements of 10CFR71 and the AT-400A Container Program Requirements. The containment vessel remained leaktight, the highest measured containment vessel temperature was less that 600°F and the integrity of the pit support fixture was maintained.

Compliance is demonstrated with the following five types of information: (1) photographic record and visual inspection, (2) dimensional inspection data, (3) temperature data, (4) leak test results and (5) weight data.

Photographic Record and Visual Inspection

The damage is shown in Figures 5, 6, 7 and 8. Figure 5 shows the container after the 4-ft drop. The observable damage is the deformation of the sheet metal portion of the lid. That surface has moved out to contact the unyielding target during impact, resulting in permanent deformation. Figure 6 shows the results of the 30-ft drop. At the impact point there is some deformation of the lid and the overpack body. The overpack lost the 3 bolts that were closest to the impact point.

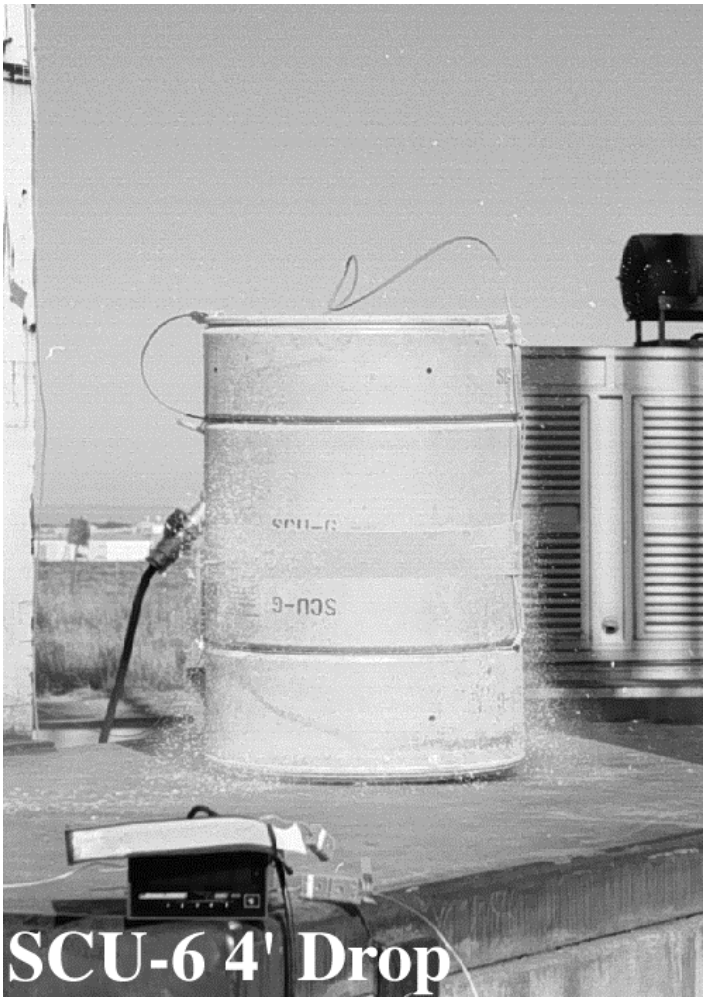

Figure 5: Post 4-ft Drop Test

Figure 6: Post Center-of-Gravity Over Corner 30-ft Drop Test

Figures 7 and 8 show the results of the dynamic crush test. This test results in significant deformation of the overpack body. Both the overpack and containment vessel were flattened at the impact point of the crush plate and where the overpack rests on the target (180° and 0° respectively). Further, from the disassembly and measurements given in Table 4, it is clear that the containment vessel was also deformed. There was no additional loss of bolts in the overpack lid.

Figure 7: Post Dynamic Crush Test - Lid View

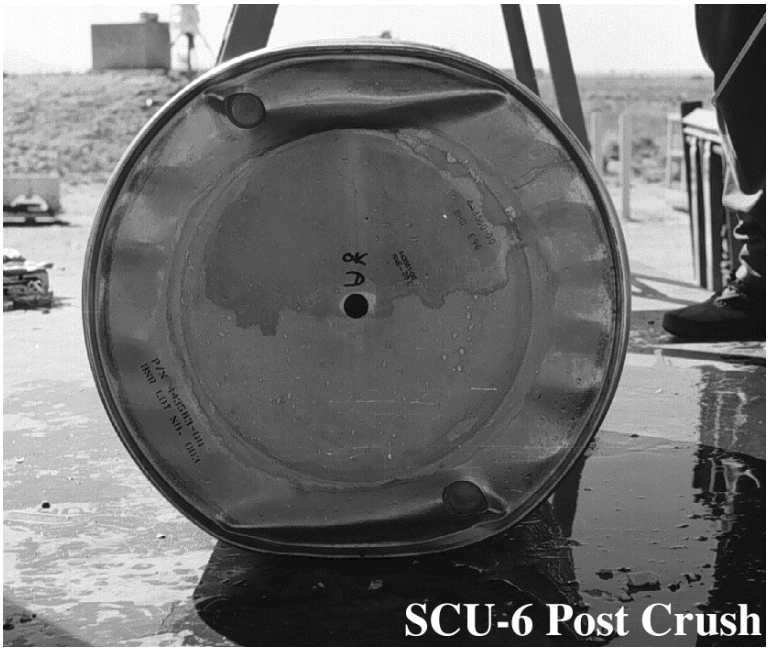

Figure 8: Post Dynamic Crush Test - Bottom View

The next test in the sequence was the puncture test. The orientation was center-of-gravity over lid corner. The observable result was "a barely visible mark approximately 1.5 inches long on the lid ring". Since there had been no opening of the lid resulting from the previous impact tests, the lid did not present an opportunity for further opening resulting from prying action in the puncture test. There were no additional bolts lost as a result of this test.

Dimensional Inspection Data

Tables 3 and 4 give the dimensions of the overpack and the containment vessel. Figures 1 and 2 show the measurement locations. The overpack dimensions were measured prior to the immersion test and following the puncture test. The containment vessel measurements were taken prior to the immersion test and after the pool fire test. The difference is the pre-test measurement minus the post-test measurement.

Table 3: Overpack Inspection Data

Measurement	Pre-Test (in.)	Post-Test (in.)	Difference (in.)
H1, 0°	26.810	26.635	0.175
H2, 90°	26.791	27.074	-0.283
H3, 180°	26.832	26.965	-0.133
H4, 270°	26.851	26.999	-0.148
OD1, 0°	19.832	19.389	0.443
OD2, 90°	19.847	20.092	-0.245
OD3, 0°	19.796	19.304	0.492
OD4, 90°	19.849	20.101	-0.252
OD5, 0°	19.871	19.192	0.679
OD6, 90°	19.899	20.175	-0.276

The results given in Table 3 demonstrate that the result of the impact tests is a shortening (by 0.175 inches) of the overpack at the impact point. With the exception of the drop impact point, the overpack is somewhat longer.

Table 4: Containment Vessel Inspection Data

Measurement	Pre-Test (in.)	Post-Test (in.)	Difference (in.)
OD1, 0°	14.004	14.026	-0.022
OD2, 90°	14.004	13.936	0.068
OD3, 0°	13.965	14.009	-0.044
OD4, 90°	13.972	13.332	0.64
OD5, 0°	14.019	14.047	-0.028
OD6, 90°	14.007	13.347	0.66
OD7, 0°	13.997	14.046	-0.049
OD8, 90°	13.994	13.264	0.73
OD9, 0°	14.000	14.044	-0.044
OD10, 90°	13.999	13.270	0.729
OD11, 0°	14.000	14.014	-0.014
OD12, 90°	14.000	13.557	0.443
H1, 0°	18.899	18.883	0.016
H2, 90°	18.902	18.888	0.014
H3, 180°	18.915	18.880	0.035
H4, 270°	18.917	18.878	0.039

The deformation of the containment vessel is dependent on the location of the containment vessel and on the orientation of impact. During assembly of the container, the 0° location of the containment vessel was aligned with the 0° location of the overpack. During testing the containment vessel rotated with respect to the overpack. Upon disassembly, it appears that the containment vessel 0° location had rotated to be adjacent to the overpack 90° location at the time of the dynamic crush test. Table 4 shows that the greatest deformations in the containment vessel were along the impact line at the 90° mark on the containment vessel. It is also apparent from Table 4 that the greatest deformation was at the unsupported center of the containment vessel with less deformation at the very stiff shelf location on the lower shell and as the semi-elliptical head of the upper shell was approached.

Tables 5 through 9 provide the data on the response of the pit support fixture. Tables 5 through 7 give the gaps that exist post-test sequence between fixture components and the containment vessel. Tables 8 and 9 show the change in the transition flange. Table 8 gives the transition flange thickness. The thickness is measured between two points on opposing sides of the transition flange. The height is measured from a flat surface on which the transition flange is resting to the top of the transition flange. For instance, Table 5 shows that the gaps between the transition flange and the lower shell increased at all but the 270° location. Table 8 shows that the transition flange thickness increased at all but the 270° location that indicates that the transition flange deformed under a tensile load except near the 270° location. Table 9 indicates

the overall deformation from a flat surface. For this test sequence, the fixture was deformed as much as 0.86 inches without loss of fixture integrity.

Table 5: Gaps between Transition Flange and Lower Shell

Location	0°	45°	90°	135°	180°	225°	270°	315°
Pre-Test (in.)	.235	.230	.225	.235	.245	.235	.250	.250
Post-Test (in.)	.383	.260.	.236	.418	.361	.360	.186	.347
Difference (in.)	-.148	-.030	-.011	-.183	-.116	-.125	.064	-.097

Table 6: Gaps between Lower Jaw and Lower Shell

Location	0°	45°	90°	135°	180°	225°	270°	315°
Pre-Test (in.)	.440	.420	.400	.390	.405	.420	.440	.450
Post-Test (in.)	.490	.285	.299	.509	.420	.177	.274	.416
Difference (in.)	-.050	.135	.101	-.119	-.015	.243	.166	.034

Table 7: Gaps between Preload Spring and Upper Shell

Location	45°	135°	225°	315°
Pre-Test (in.)	.063	.056	.057	.064
Post-Test (in.)	.051	.070	.067	.050
Difference (in.)	.012	-.014	-.010	.014

Table 8: Transition Flange Thickness

Location	0°	45°	90°	135°	180°	225°	270°	315°
Pre-Test (in.)	1.621	1.620	1.623	1.616	1.624	1.622	1.620	1.620
Post-Test (in.)	1.656	1.688	1.725	1.768	1.677	1.772	1.572	---
Difference (in.)	-.035	-.068	-.102	-.152	-.053	-.150	.048	-.203

Table 9: Transition Flange Height

Location	0°	45°	90°	135°	180°	225°	270°	315°
Pre-Test (in.)	1.624	1.627	1.625	1.622	1.626	1.628	1.631	1.631
Post-Test (in.)	2.239	1.718	2.231	1.768	2.486	1.793	2.440	--
Difference (in.)	-.615	-.091	-.606	-.146	-.860	-.165	-.809	-.128

There was damage to the jaws noted during disassembly. In particular, for the lower jaw, "sheared area of top edge from 270° to 225°" (B. J. Joseph, November 12, 1996, PFT-AT-400A-DP, Rev. A). A possible cause of this damage is the lower jaw impacting the weld joint backing plate during the 30-ft drop test. On the upper jaw, it was noted that there was a "galled area on contour 45° to 90° & 225° to 270°". These marks indicate an impact between the jaw and the lower shell, even though there was not sufficient permanent deformation to leave these components in contact.

Also measured during disassembly were the torques of all the fasteners. The tie-rods ranged from 3 to 6 ft-lb, the hex cap screws ranged from 1 to 4 ft-lb and the 3/8-16UNC-2B self-locking Hex Nuts were 20 to 26 ft-lb.

During the visual inspection of the fire damage, it was noted that there was a black high density char covering the containment vessel. This results from the deposition of the decomposing foam constituents. It was also noted in the destructive disassembly of the overpack that there were "2 pieces ~ 10"X18"X1" thick remained. Most of foam remaining was just black char." These visual observations indicate that there is little intact foam in the overpack and that the remaining material is the low-density char formed by the intumescing foam.

Temperature Data

The final test in the sequence was the pool fire test. The data from the six external thermocouples is given in Figures 9 and 10. The average temperature for the overpack side exceeded 1700°F and the average for the top and bottom of the overpack exceeded 1500°F. The fire was ignited at 9:06 a.m. on October 24 a.m. and lasted until 9:37 a.m.

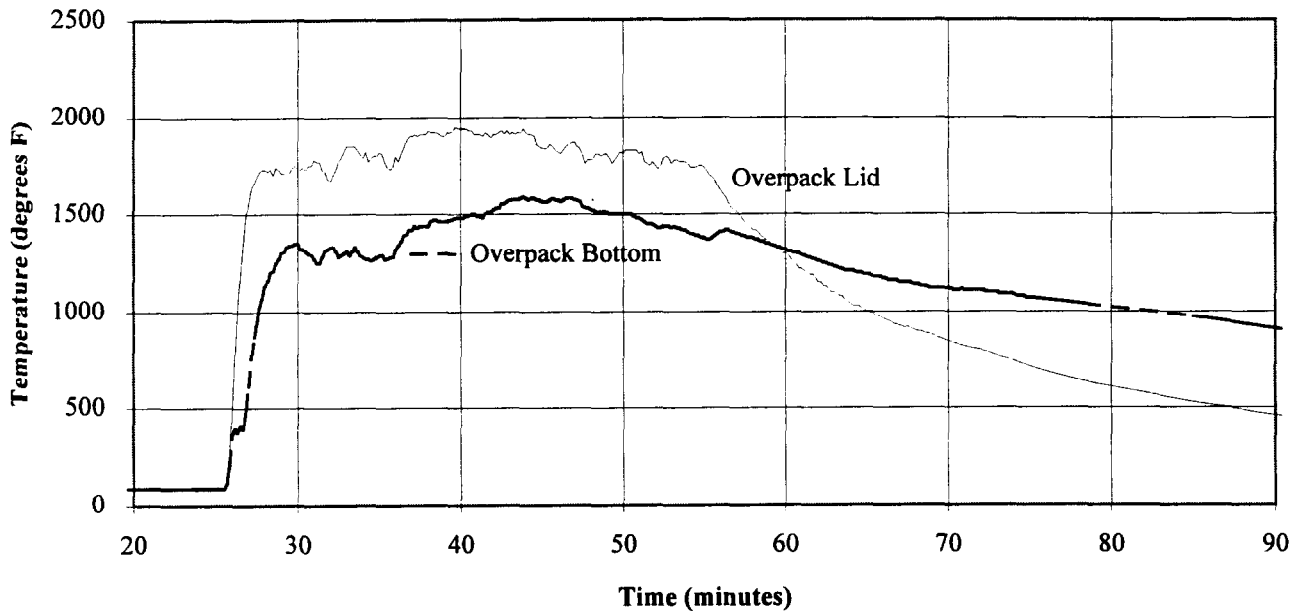

Figure 9: Overpack End Temperatures

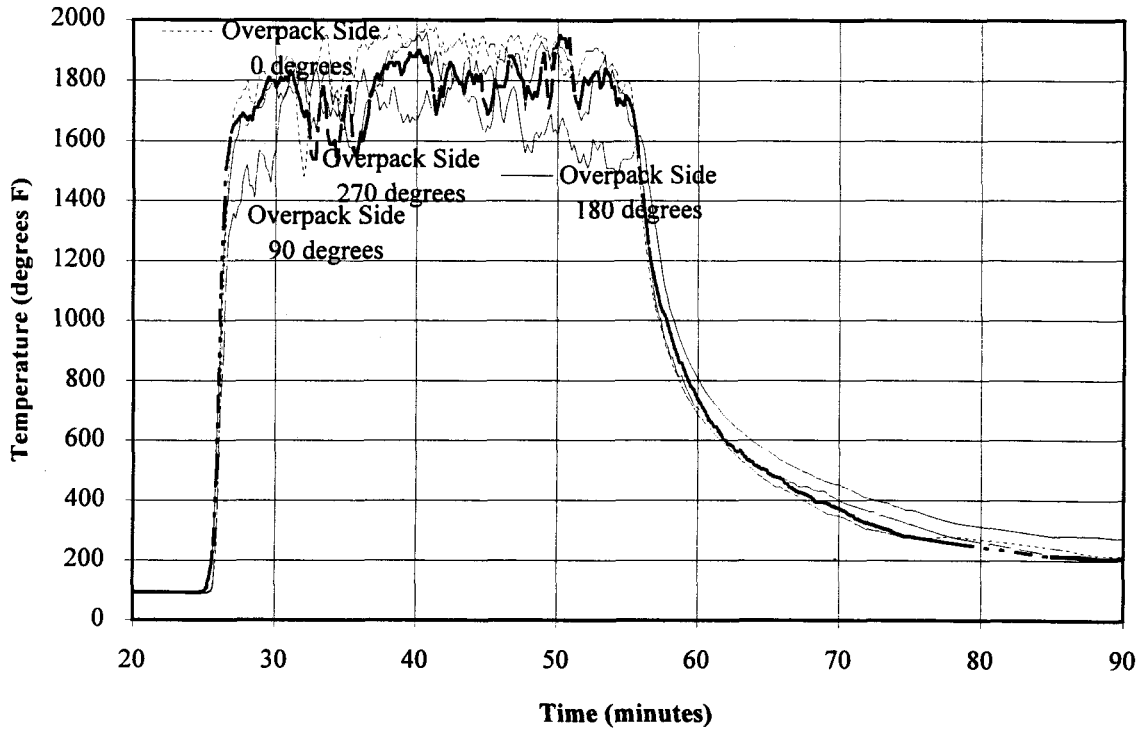

Figure 10: Overpack Side Temperatures

The final step in this test sequence was the examination of the interior of the containment vessel. The top of the containment vessel was removed using a band saw and the temperature indicators were read. Temperatures ranged from 320°F to 410°F.

Leak Test Results

Following the disassembly of the overpack and the decontamination of the containment vessel, the containment vessel was leak tested. The leak rate was 5.5 X 10^{-9} cc/s helium. This leak rate is less than the ANSI N14.5 definition of leaktight.

Weight Data

After the fire, the container was weighed. The post-fire weight of 273 pounds indicated a net weight loss of 58.5 pounds resulting from the decomposition of the polyurethane foam.

IV. Normal Conditions Tests

Test Description

The SCU-7 test sequence is specified in the AT-400A Container Test Plan and consisted of the following sequence of tests: water spray, compression, water spray, 4-ft drop, water spray, 4-ft drop, water spray, 4-ft drop, penetration, penetration, penetration, penetration, vibration and corrosion. All tests were performed at ambient temperatures. The tests used simulated contents (Shelf Life Mock Pit Assembly - Drawing No. 258480) to bound the mass of the proposed contents. The test sequence and orientations are summarized in Table 10. This sequence of tests exceeds the regulatory requirement due to the accumulated damage resulting from multiple impact tests. The test procedures used are listed in Appendix B.

The data presented is from the SCU-7B test unit. The initial unit, SCU-7, had an unacceptable tube crimp and weld. This unit was rejected at Pantex in accordance with standard Pantex AT-400A procedures.

Table 10 : SCU-7B Test Sequence

Test	Orientation
water spray	vertical
compression	vertical
water spray	vertical
4 ft drop	cgoc
water spray	vertical
4 ft drop	lid down
water spray	vertical
4 ft drop	side, 0°down
penetration	side, 0° up
penetration	0° bolt
penetration	top center plug
penetration	bottom fill plug
vibration	vertical
corrosion	N/A

The first step was to ensure that the hardware adequately represented the design. The pedigree given in Appendix A demonstrates the adequacy of the hardware. The pedigree is based on dimensional inspections, use of qualified processes and a review of material certifications. Where deviations from the design exist, the appropriate design agency reviewed the deviations and determined that the deviations would not significantly effect the test results.

Next, the container was assembled according to the AT-400A Container Assembly Procedure. The data required for this sequence of tests are the deformations, the post-test sequence leak rate and evidence of corrosion. At the initiation of testing, the assembled container weighed 331.5 lb.

The first test the container was subjected to was the water spray test. The water spray test, as specified in the AT-400A Container Normal Water Spray Test Procedure consisted of positioning a container in a vertical configuration then spraying from one direction for 15 minutes and repeating the process until all four quadrants had been sprayed. The water spray simulated 2.4 inches per hour of rainfall. The test was completed at 11:16 a.m. on October 9, 1996.

The water spray test was followed by the compression test starting at 11:30 a.m. on October 9, 1996. The test, as defined in AT-400A Container Normal Compression Test Procedure, subjects a container to a load greater than five times the weight of the container for 24 hours. Specifically, the container was placed vertically on a concrete pad, an AT-400A overpack weighing 163.6 lb was placed vertically on top of the tested container and a 2200-lb steel plate was placed on top of the overpack. This test ensured that the container experienced a load well in excess of five times its weight and that the load was transmitted as it would be in a vertical stack. The test was completed at 11:30 a.m. on October 10, 1996.

The next tests were the 4-ft drops. These tests are defined in the AT-400A Container Normal Drop Test Procedure. The test consists of dropping the container from a height of 4 ft onto an unyielding target in the orientation as specified in the test plan. Each of the three 4 ft drop tests was preceded by a water spray test. The drop tests occurred between 1.5 and 2.5 hours after the completion of the water spray test. The timing for these tests is given in Table 11.

Table 11: Timing for Water Spray/Drop Tests

Water Spray Completion Time	Drop Test Initiation Event
12:48 p.m.	2:38 p.m.
11:36 a.m.	1:20 p.m.
2:51 p.m.	4:21 p.m.

The orientations selected for the drop tests were center-of-gravity over lid corner (cgoc), lid down and side down coincident with the previously damaged corner. The cgoc orientation was selected to minimize the footprint on the target and hence to maximize deformation. It also provided for the impact of the contents onto the lid interior without the target providing an external resisting force to the deformation of the lid membrane. The lid down orientation was selected to maximize the deformation of the already deformed pit support structure and lid membrane. The side down coincident with the previously damaged corner maximizes the possibility of shock to the simulated pit and pit support structure by impact with the containment vessel wall. This orientation also results in additional damage to the previously impacted corner.

Following the 4-ft drop tests, a series of four penetration tests were performed. These tests, as defined in the AT-400A Container Normal Penetration Test Procedure, consist of dropping a 1.25 inch diameter, 13 pound steel bar with a hemispherical end from a height of 40 inches onto the package. The four orientations were selected to increase damage that occurred during the 4-ft drop tests. The impact locations, as specified in Table 10, were side - 0°, 0° bolt, top center plug and bottom fill plug. The first three of these orientations were selected to impact

areas damaged during the 4-ft drop tests. The final orientation was selected to impact the weakest area (fill plug) on the bottom of the container.

After the drop tests, the damaged lid was replaced to provide the proper level of compression for the vibration test. The vibration test simulated the shock from forklift transport as well as the vibration environment resulting from truck transport as specified in SS706212, AT-400A Container Program Requirements. The handling shocks were applied to the container both vertically and horizontally.

Since the container is symmetrical and is transported vertically, only the vertical and an envelope of the horizontal vibration inputs were used for testing. The duration for the vibration test was 180 minutes for each axis.

At the completion of the vibration test, the containment vessel was leak tested according to the methods and requirements specified in ANSI N14.5 and in the AT-400A Container Pressurized Envelope Helium Leak Test Procedure.

The final test was a corrosion test. This test simulated accelerated effects of seacoast atmospheres. The test condition, C, exposed the AT-400A and components to a salt fog atmosphere at 95°F for four days with a salt deposition rate of 10,000 to 50,000 mgm/m^2/day.

Results

The test results provide objective evidence that the AT-400A container complies with the normal conditions requirements of 10CFR71 and the AT-400A Container Program Requirements. The containment vessel remained leaktight, the integrity of the pit support fixture was maintained and there were no signs of corrosion on the container.

Compliance is demonstrated with the following three types of information. These are (1) photographic record and visual inspection, (2) dimensional inspection data and (3) leak test results.

Photographic Record and Visual Inspection

The water spray tests did not have any observable effect on the response of the container.

Figures 11 and 12 show the first drop test. Figure 11 shows the container just prior to impact. Figure 12 show the impacted corner following the test. The observable damage is a slightly flattened area around the impact point. There was no loss of bolts, tearing of metal or significant deformation that would preclude continued use.

The lid down test did result in significant deformation of the lid membrane. The membrane had a maximum displacement of approximately 1/2-inch. This amount of deformation results in loss of compression of the inserts and containment vessel. The loss of compression results in a change in the thermal path and requires that the lid be replaced. Other minor damage included loss of the lid cap plug and the loosening of two of the spot welds on the radioactive label.

The side down test created a small flat at the impact area and an additional cap plug came out of the lid. There was not any significant deformation of the overpack, loss of bolts or tearing of metal that would preclude continued use.

The visual inspections following the penetrations identified (in the order of the tests): (1) a small dent in the side at 0°, (2) a small nick on the edge of the bolt hole, (3) the top center cap plug was cracked and broken off and (4) the bottom fill cap plug was cracked. The dent and nick on the stainless steel have no impact on continued use. The cracked cap plugs can be replaced prior to continued use.

During the replacement of the lid for the vibration test it was observed that there were no obvious changes to the exterior of the container. Internally, there was a fine line on the overpack lid and the upper insert cover elliptical contour had a mark approximately 1/2 inch wide located approximately one inch from the outer diameter. Each of these marks indicate some relative rotation between the overpack, the insert covers and the containment vessel. None of the marks impact the continued use of the container. The overpack socket head screws remained fully torqued at 22 to 26 ft-lb.

The effects of the corrosion test were noted in surface staining on the threads and heads of the overpack socket head screws and the top center of the insert assembly. On the containment vessel there was a surface stain running from the laser marked area. There was no impact on component functionality from any of the surface staining.

After all testing, the top of the containment vessel was removed using a band saw so that internal measurements of the fixture and mock up could be obtained.

Figure 11: Center-of-Gravity Over Corner Drop Test

Figure 12: Post Center-of-Gravity Over Corner Drop Test

Dimensional Inspection Data

Tables 12, 13, 14 and 15 give the pre- and post-test dimensions of the overpack, inserts and the containment vessel. Figure 1, 2 and 3 show the measurement locations. The dimensions were measured prior to the first water spray test and following the vibration test. The difference is the pre-test measurement minus the post-test measurement.

Table 12: Overpack Inspection Data

Measurement	Pre-Test (in.)	Post-Test (in.)	Difference (in.)
H1, 0°	26.836	26.643	0.193
H2, 90°	26.840	26.693	0.147
H3, 180°	26.839	26.712	0.127
H4, 270°	26.831	26.686	0.145
OD1, 0°	19.829	19.806	0.023
OD2, 90°	19.837	19.871	-0.034
OD3, 0°	19.876	19.696	0.18
OD4, 90°	19.852	19.862	-0.01
OD5, 0°	19.890	19.831	0.059
OD6, 90°	19.900	19.905	-0.005

The results given in Table 12 demonstrate that the cumulative damage to the overpack is a reduction in length of the package of 0.127 to 0.193 inches. The greatest deformation was coincident with the center-of-gravity over corner impact location. The overpack was also ovalized. This is observed in the increase in diameter along the 90° line and a reduction in diameter along the impact line at 0°. The ovalization is greatest near the top of the container where the decrease in the diameter (0.023-inch) at the impact point is comparable to the increase (0.034-inch) at 90 degrees from the impact point. Moving farther down the overpack, there remains significant decrease (0.18 and 0.059) at the impact location, but relatively little change at the 90 degree locations. The overpack is reusable with this amount of damage. Where observable deformation of the lid occurs, such as during the lid down drop, the lid will be replaced to ensure adequate thermal contact.

Tables 13 and 14 provide data on the cumulative damage to the insert covers. Note that all height measurements are taken from the plane upon which the insert rests. This means that any bowing of the flat surface of the insert is included in all of the measurements. The height measurements show a general increase. This is due to a slight bowing of the insert surface that is in contact with either the lid or the bottom drum surface. Also note that the upper insert (-1) has substantially more deformation. This result is expected since the primary impact of the containment vessel in two orientations was into the top insert. The bottom insert would have received only a secondary impact.

Table 13: Insert -1 Inspection Data

Measurement	Pre-Test (in.)	Post-Test (in.)	Difference (in.)

OD1	14.023	14.002	0.021
OD2	14.009	14.013	-0.004
H1	5.496	5.507	-0.011
H2	5.494	5.512	-0.018
H3	5.500	5.523	-0.023
H4	5.510	5.527	-0.017
H5	4.007	4.022	-0.015
H6	3.999	4.015	-0.016
H7	4.000	4.029	-0.029
H8	4.006	4.034	-0.028
H9	2.832	2.850	-0.018

Table 14: Insert -2 Inspection Data

Measurement	Pre-Test (in.)	Post-Test (in.)	Difference (in.)
OD1	13.998	13.997	0.001
OD2	14.011	14.015	-0.004
H1	5.495	5.496	-0.001
H2	5.492	5.500	-0.008
H3	5.486	5.487	-0.001
H4	5.482	5.484	-0.002
H5	4.003	4.011	-0.008
H6	4.004	4.012	-0.008
H7	4.019	4.015	0.004
H8	4.007	4.017	-0.01
H9	2.840	2.842	-0.002

Table 15: Containment Vessel Inspection Data

Measurement	Pre-Test (in.)	Post-Test (in.)	Difference (in.)
OD1, 0°	14.002	14.000	0.002
OD2, 90°	14.004	14.002	0.002
OD3, 0°	13.957	13.957	0
OD4, 90°	13.966	13.966	0
OD5, 0°	14.031	14.030	0.001
OD6, 90°	14.021	14.020	0.001
OD7, 0°	14.002	14.000	0.002
OD8, 90°	14.004	14.003	0.001
OD9, 0°	14.004	14.003	0.001
OD10, 90°	14.006	14.005	0.001
OD11, 0°	14.004	14.003	0.001
OD12, 90°	14.004	14.003	0.001
H1, 0°	18.898	18.897	0.001
H2, 90°	18.897	18.897	0
H3, 180°	18.897	18.897	0
H4, 270°	18.895	18.895	0

Table 15 shows that the normal conditions tests result in no significant deformation to the containment vessel.

Tables 16 through 20 provide the data on the response of the pit support fixture. Tables 16 through 18 give the gaps that exist between fixture components and the containment vessel. Tables 19 and 20 show the change in the transition flange. Table 19 gives the transition flange thickness. The thickness is measured between two points on opposing sides of the transition flange. The height is measured from a flat surface on which the transition flange is resting to the top of the transition flange.

Table 16: Gaps between Transition Flange and Lower Shell

Location	0°	45°	90°	135°	180°	225°	270°	315°
Pre-Test (in.)	.266	.266	.260	.265	.265	.265	.262	.265
Post-Test (in.)	.141	.110	.188	.313	.444	.444	.413	.290
Difference (in.)	.125	.156	.072	-.048	-.179	-.179	-.151	-.025

Table 17: Gaps between Lower Jaw and Lower Shell

Location	0°	45°	90°	135°	180°	225°	270°	315°
Pre-Test (in.)	.406	.413	.428	.436	.436	.426	.413	.403
Post-Test (in.)	.210	.144	.265	.444	.611	.672	.652	.367
Difference (in.)	.196	.269	.163	-.008	-.175	-.246	-.239	.036

Table 18: Gaps between Preload Spring and Upper Shell

Location	45°	135°	225°	315°
Pre-Test (in.)	.058	.054	.065	.047
Post-Test (in.)	.053	.052	.049	.049
Difference (in.)	.005	.002	.016	-.002

Table 19: Transition Flange Thickness

Location	0°	45°	90°	135°	180°	225°	270°	315°
Pre-Test (in.)	1.618	1.623	1.623	1.631	1.624	1.626	1.621	1.624
Post-Test (in.)	1.635	1.606	1.654	1.696	1.664	1.661	1.667	1.676
Difference (in.)	-.017	.017	-.031	-.065	-.040	-.035	-.046	-.052

Table 20: Transition Flange Height

Location	0°	45°	90°	135°	180°	225°	270°	315°
Pre-Test (in.)	1.622	1.627	1.625	1.629	1.625	1.630	1.626	1.630
Post-Test (in.)	1.691	1.606	1.710	1.696	2.083	1.666	2.068	1.680
Difference (in.)	-.069	.021	-.085	-.067	-.458	-.036	-.442	-.050

Leak Test Results

SCU-7B remained leaktight following the normal conditions tests.

V. Conclusion

The results of these two test sequences provide evidence that the container meets the requirements of the Code of Federal Regulation, Title 10, Part 71, Packaging and Transportation of Radioactive Materials and SS706212, AT-400A Container Program Requirements.

VI. References

Code of Federal Regulations, Title 10, Part 71, Packaging and Transportation of Radioactive Materials
SS706212, AT-400A Container Program Requirements
AT-400A-TP, AT-400A Container Test Plan
ANSI N14.5, American National Standard for Radioactive Materials - Leakage Tests on Packages for Shipment
MIL-STD-883B, Salt Atmosphere

Appendix A: Test Hardware Pedigree

AT-400A TEST UNIT PEDIGREE REPORT

SCU-7B

Revision 1 / October 24, 1996

Table of Contents

I	Container Components
II	Materials
III	Vessel Weld
IV	Test Hardware vs. Current Design
Attachment	Fixture Pedigree, dated Sep. 23, 1996

Prepared by

Johnny J. Molina Jr., 2165

Reviewed and Approved by

Robert E. Glass, 2165

Ramon S. Pacheco, 2165

Wendy J. Baca, DOE/AL NESD

Distribution:

DOE/AL/NESD	W. J. Baca
LANL/MS P946	R. Mitchell
LLNL/MS L-125	G. L. Dittman
LLNL/MS L-125	B. Costerus
MS 0483	J. J. Molina Jr.
MS 0483	R. E. Glass
MS 0483	R. S. Pacheco
MS 0483	R. L. Alvis
MS 0483	D. H. Hill
MS 0483	B. J. Joseph
MS 0483	AT-400A FILE .358

Revision

Revision 1	Sections I & IV: Added Lid 2. DOE direction requires replacing the SCU-7B Lid with Lid 2 prior to the Vibration test.

I. CONTAINER COMPONENTS

PART NAME	PART NUMBER	DWG ISSUE	PART IDENTIFICATION	ORDER	INSPECTION RESULTS	NONCONFORMING FEATURES	DEVIATION	NONCONFORMANCE EVALUATION
Lower Shell	443658-01	P	TDA-20139-E96-008	TC-2110A	Conforms			
Upper Shell	703821-00	P	TDA-20016-L95-002	TC-2110A	Conforms			
Overpack	443560-00	P	BHD-E96 S/N 10037	TC-2105	Conforms			
Insert Assembly (2 ea.)	443558-01	M	BHD-00113-E96 (Lower) BHD-00115-E96 (Upper)	TC-2105	Conforms			
Lower Jaw	259462-00	A	N/A	CU-3541	NCR 96-49	per lot of 3: Spherical Radius W/.004.	3 parts exceed tolerance by +.0016, +.002, and +.0018.	Minimal impact on SCU-7B tests.
						per lot of 3: Helicoil T.P. diameter is .017 at a 6.0" projection after Helicoil installation.**[1]**	3 parts exceed tolerance by .0369 to .0851, .0228 to .0496, and .0693 to .2235.	Assembly fit adequate.
Upper Jaw	259464-00	A	N/A	CU-3541	NCR 96-51	per lot of 3: Contour W/N. .004 Radius 4.750 ±.002.	3 parts exceed tolerance by +.0005, +.0011, and +.0007.	Minimal impact on SCU-7B tests,
Tie Rods (4 ea.)	259421-00	D	N/A	Supplied by ASFM&T	Conforms			

NOTES/COMMENTS

[1] Helicoils were installed prior to inspection.

PART NAME	PART NUMBER	DWG ISSUE	PART IDENTIFICATION	ORDER	INSPECTION RESULTS	NONCONFORMING FEATURES	DEVIATION	NONCONFORMANCE EVALUATION
Fitting	443566-00	D	BQW #1	TC-2115	Conforms			
Lid	443584-00	M	Lot No. BNE/002 S/N 10037	TC-2080B	Conforms			
Lid 2	443584-00	M	Lot No. BNE/002 S/N 10032	TC-2080B	Conforms			
Screw	703822-00	K + ACO 961703KC + SXR N0075SA96SA	Lot 57920	TC-2120	Conforms			
Drum Assembly	443561-00	M	Lot No. BNE/002 S/N 10037	TC-2080B	Conforms			
Liner	443562-00	L	CJG-5615-3 & CJG-5616-3	TC-2060B	NCR 95-69	**Lot Deviations:**		
						Perpendicularity to -C-W/ .03.	Exceeded limit by up to +.055.	Problem corrected during drum assembly process P/N 443561.
						Dia. O.D. 16.64 +/-.13.	Exceeded tol. by -.005.	Problem corrected during drum assembly process P/N 443561.
						Linearity 23.18 +/-.13.	Exceeded tol. by +.015.	Problem corrected during drum assembly process P/N 443561.
						Flange hardness Rc 40.	Exceeded by Rc 5.	Support from ring during impact events will preclude crack propagation.
Insert Housing (2 ea.)	443559-00	K	CJG-004	TC-2060B	Conforms			
Drum	443583-00	F	BNR/003	TC-2075	Conforms			
Closing Plate, Lid	443655-00	J	BNR/001	TC-2075	Conforms			

NOTES/COMMENTS

II. MATERIALS

Containment Vessel Components: 304L Stainless Steel

For Vessels Made From Forgings:

Part	Part Number	Material	Material ID	Forging Serial No.	C (.030)	Mn (2.00)	P (.045)	S (.030)	Si (.75)	Cr (18.00-20.00)	Ni (8.00-12.00)	N (.10)
					Chemical Composition % (required max. values unless range is indicated)							
Lower Shell	20139	304L	9504	47436	.016	1.80	.027	.022	.45	18.41	8.85	.08
Upper Shell	20016	304L	3-7417	509T-143	.019	1.72	.030	.005	.38	18.31	8.22	.090
VCR Gland		304L	H/N431703		.013	1.13	.016	.007	.39	18.3	11.0	-------

Part	Mfr. Heat Number	Tensile Strength (65 ksi min.)	Yield Strength (25 ksi min.)	% Elong. (40 min.)	% Red. in Area (50 min.)
	Forging Mechanical Properties				
Lower Shell	K-130	82.0 ksi	40.3 ksi	58.0	74.0
Upper Shell	M-239	77.0 ksi	37.2 ksi	64.0	76.0

Screws: A286 stainless steel

	Tensile Strength (160 ksi min.)	Hardness (Info. Only)	Silver Plate Thkns. (Info. Only)
Lot 57920	183.4 - 185 ksi	36.5-36.6 Rc	.0001-.0002 in.

-

Foam: FR-3725 (General Plastics)

Overpack	Foam Weight (lb)	Batch	Compressive Strength	Thermal Conductivity	Intumescence	Notes/Comments
10036	73.6	205	2855	.489	214%	

Insert	Foam Weight (lb)	Batch	Compressive Strength	Thermal Conductivity	Intumescence	Notes/Comments
113	6.036	502	742	.286	213%	
115	5.986	502	742	.286	213%	

III. VESSEL WELD

Weld	**Process**	**Filler Metal**	**Welding Org.**	**Process Date**	**Process Information**
Girth	GMAW	308L	Pantex	10/02/96	Per P7-0371-AT400, Issue E
Tube Crimp	GTAW	N/A	Pantex	10/04/96	Per P7-0369-AT400, Issue F.

IV. TEST HARDWARE VS CURRENT DESIGN

CURRENT DESIGN			TEST HARDWARE		COMPARISON		
PART NAME	**PART NUMBER**	**DWG ISSUE**	**PART NUMBER**	**DWG ISSUE**	**CURRENT DESIGN**	**TEST HARDWARE VARIATION**	**COMMENTS**
Lower Shell	443658-01	P	443658-01	P			
Upper Shell	703821-00	P	703821-00	P			
Overpack	443560-00	R	443560-00	P			No final configuration change.
Insert Assembly	443558-01	N	443558-01	M			No final configuration change.
Fitting	443566-00	G	443566-00	D			No final configuration change.
Lid	443584-00	P	443584-00	M			No final configuration change.
Lid 2	443584-00	P	443584-00	M			No final configuration change.
Screws (16)	703822-00	K + ACO 961703KC	703822-00	K + ACO 961703KC + SXR N0075SA96SA			
Drum Assembly	443561-00	N	443561-00	M			No final configuration change.
Liner	443562-00	N	443562-00	L			No final configuration change.
Insert Housing	443559-00	L	443559-00	K			No final configuration change.
Drum	443583-00	G	443583-00	F			No final configuration change.
Closing Plate, Lid	443655-00	K	443655-00	J			No final configuration change.

NOTES/COMMENTS

AT-400A TEST UNIT PEDIGREE REPORT

SCU-6

October 10, 1996

Table of Contents

I	Container Components
II	Materials
III	Vessel Weld
IV	Test Hardware vs. Current Design
Attachment	Fixture Pedigree, dated Sep. 23, 1996

Prepared by

Johnny J. Molina Jr., 2165

Reviewed and Approved by

Robert E. Glass, 2165

Ramon S. Pacheco, 2165

Wendy J. Baca, DOE/AL NESD

Distribution:

DOE/AL/NESD	W. J. Baca
LANL/MS P946	R. Mitchell
LLNL/MS L-125	G. L. Dittman
LLNL/MS L-125	B. Costerus
MS 0483	J. J. Molina Jr.
MS 0483	R. E. Glass
MS 0483	R. S. Pacheco
MS 0483	R. L. Alvis
MS 0483	D. H. Hill
MS 0483	B. J. Joseph
MS 0483	AT-400A FILE .358

Notes

Originals signed by:

Johnny J. Molina Jr.
Robert E. Glass
Ramon S. Pacheco
Wendy J. Baca

I. CONTAINER COMPONENTS

PART NAME	PART NUMBER	DWG ISSUE	PART IDENTIFICATION	ORDER	INSPECTION RESULTS	NONCONFORMING FEATURES	DEVIATION	NONCONFORMANCE EVALUATION
Lower Shell	443658-01	P	SDA-10117-B96-006	TC-2110A	Conforms			
Upper Shell	703821-00	P	TDA-20148-A96-009	TC-2110A	Conforms			
Overpack	443560-00	P	BHD-E96 S/N 10043	TC-2105	Conforms			
Insert Assembly (2 ea.)	443558-01	M	BHD-00119-E96 (Lower) BHD-00106-E96 (Upper)	TC-2105	Conforms			
Lower Jaw	259462-00	A	N/A	CU-3541	NCR 96-49	per lot of 3. Spherical Radius W/.004.	3 parts exceed tolerance by +.0016, +.002, and +.0018.	
						per lot of 3: Helicoil T.P. diameter is .017 at a 6.0" projection. **[1]**	3 parts exceed tolerance by .0369 to .0851, .0228 to .0496, and .0693 to .2235.	
Upper Jaw	259464-00	A	N/A	CU-3541	NCR 96-51	per lot of 3: Contour W/N. .004 Radius 4.750 ±.002	3 parts exceed tolerance by +.0005, +.0011, and +.0007.	
Tie Rods (4 ea.)	259421-00	D	N/A	Supplied by ASFM&T	Conforms			

NOTES/COMMENTS

[1] Helicoils were installed prior to inspection.

PART NAME	PART NUMBER	DWG ISSUE	PART IDENTIFICATION	ORDER	INSPECTION RESULTS	NONCONFORMING FEATURES	DEVIATION	NONCONFORMANCE EVALUATION
Fitting	443566-00	D	BQW #1	TC-2115	Conforms			
Lid	443584-00	M	BNE/002 S/N 10043	TC-2080B	Conforms			
Screw	703822-00	K + ACO 961703KC + SXR N0075SA96SA	Lot 57920	TC-2120	Conforms			
Drum Assembly	443561-00	M	BNE/002 S/N 10043	TC-2080B	Conforms			
Liner	443562-00	L	Lot CJG, 5615-3 & 5616-3	TC-2060C	NCR 95-69	**Lot Deviations:**		
						Perpendicularity to -C-W/ .03.	Exceeded limit by up to +.055.	Problem corrected during drum assembly process P/N 443561
						Dia. O.D. 16.64 +/-.13.	Exceeded tol. by -.005.	Problem corrected during drum assembly process P/N 443561
						Linearity 23.18 +/-.13.	Exceeded tol. by +.015.	Problem corrected during drum assembly process P/N 443561
						Flange hardness Rc 40.	Exceeded by Rc 5.	Support from ring during impact events will preclude crack propagation.
Insert Housing (2 ea.)	443559-00	K	(106) CJG-003	TC-2060B	NCR 96-08	Ellipse 14.000 x 7.00 w/.060.	(60 out of 68 units) exceed profile limit.	Problem solved in assembly manufacturing step.
			(119) CJG-004	TC-2060B	Conforms			
Drum	443583-00	F	BNR/003	TC-2075	Conforms			
Closing Plate, Lid	443655-00	J	BNR/001	TC-2075	Conforms			

NOTES/COMMENTS

II. MATERIALS

Containment Vessel Components: 304L Stainless Steel

For Vessels Made From Forgings:

Part	Part Number	Material	Material ID	Forging Serial No.	Chemical Composition % (required max. values unless range is indicated) C (.030)	Mn (2.00)	P (.045)	S (.030)	Si (.75)	Cr (18.00-20.00)	Ni (8.00-12.00)	N (.10)
Lower Shell	10117	304L	9504	47382	.018	1.77	.028	.025	.55	18.32	8.56	.08
Upper Shell	20148	304L	9504	47568	.020	1.76	.030	.024	.50	18.36	8.30	.100
VCR Gland		304L	H/N431703		.013	1.13	.016	.007	.39	18.3	11.0	-------

Part	Forging Mechanical Properties: Mfr. Heat Number	Tensile Strength (65 ksi min.)	Yield Strength (25 ksi min.)	% Elong. (40 min.)	% Red. in Area (50 min.)
Lower Shell	K-129	82.5 ksi	39.8 ksi	57.0	71.0
Upper Shell	K-128	85.0 ksi	40.0 ksi	70.0	74.0

Screws: A286 stainless steel

	Tensile Strength (160 ksi min.)	Hardness (Info. Only)	Silver Plate Thkns. (Info. Only)
Lot 57920	183.4 - 185 ksi	36.5-36.6 Rc	.0001-.0002 in.

Foam: FR-3725 (General Plastics)

Overpack	Foam Weight (lb)	Batch	Compressive Strength	Thermal Conductivity	Intumescence	Notes/Comments
10043	73.5	205	2855	.489	214%	

Insert	Foam Weight (lb)	Batch	Compressive Strength	Thermal Conductivity	Intumescence	Notes/Comments
119	5.990	502	742	.286	213%	
106	5.964	502	742	.286	213%	

III. VESSEL WELD

Weld	**Process**	**Filler Metal**	**Welding Org.**	**Process Date**	**Process Information**
Girth	GMAW	308L	Pantex	9/17/96	Performed per P7-0371-AT400, Issue E.
Tube Crimp	GTAW	N/A	Pantex	9/18/96	Performed per P7-0369-AT400, Issue E

NOTES/COMMENTS

IV. TEST HARDWARE VS CURRENT DESIGN

CURRENT DESIGN			TEST HARDWARE		COMPARISON		
PART NAME	**PART NUMBER**	**DWG ISSUE**	**PART NUMBER**	**DWG ISSUE**	**CURRENT DESIGN**	**TEST HARDWARE VARIATION**	**COMMENTS**
Lower Shell	443658-01	P	443658-01	P			
Upper Shell	703821-00	P	703821-00	P			
Overpack	443560-00	R	443560-00	P			No final configuration change.
Insert Assembly	443558-01	N	443558-01	M			No final configuration change.
Fitting	443566-00	G	443566-00	D			No final configuration change.
Lid	443584-00	P	443584-00	M			No final configuration change.
Screws (16)	703822-00	K + ACO 961703KC	703822-00	K + ACO 961703KC + SXR N0075SA96SA			
Drum Assembly	443561-00	N	443561-00	M			No final configuration change.
Liner	443562-00	M	443562-00	L			No final configuration change.
Insert Housing	443559-00	L	443559-00	K			No final configuration change.
Drum	443583-00	G	443583-00	F			No final configuration change.
Closing Plate, Lid	443655-00	K	443655-00	J			No final configuration change.

NOTES/COMMENTS

Appendix B: List of Test Procedures

The following procedures were used in executing the SCU-6 and SCU-7B test sequences.

Procedure	**Issue**
AT-400A Container Inspection Procedure	C
AT-400A Container Assembly Procedure	E
AT-400A Container Pressurized Envelope Helium Leak Test Procedure	B
AT-400A Container Immersion Test Procedure	B
AT-400A Container Normal Drop Test Procedure	C
AT-400A Container Drop Test Procedure	C
AT-400A Dynamic Crush Test Procedure	B
AT-400A Container Puncture Test Procedure	B
AT-400A Container Pool Fire Test Procedure	B
Pool Fire Tested AT-400A Container Disassembly Procedure	A
AT-400A Container Normal Water Spray Test Procedure	C
AT-400A Container Normal Compression Test Procedure	B
AT-400A Container Normal Drop Procedure	C
AT-400A Container Normal Vibration Test Procedure	C
AT-400A Container Corrosion Test Procedure	A
AT-400A Container Normal Penetration Test Procedure	B

Appendix C: Pantex Procedures

The following procedures were used in the welding and leak testing of the SCU-6 and SCU-7B containment vessels:

Procedure	**Title**
P7-0371-AT400	AT-400A Containment Vessel Girth Weld
P7-0377-AT400	AT-400A Containment Vessel Leak Test
P7-0360-AT400	AT-400A Containment Vessel Purge and Backfill
P7-0369-AT400	AT-400A Containment Vessel Crimp and Weld
P7-0368-AT400	AT-400A Argon Leak Test

Distribution

1	MS0429	R. D. Andreas	2100
1	MS0471	D. L. Mangan	5314
1	MS0483	T. D. Hernandez	2165
1	MS0483	R. E. Glass	2165
1	MS0483	AT-400 File .341	2165
1	MS9018	Central Technical Files	8940-2
2	MS0899	Technical Library	4916
2	MS0619	Review & Approval Desk For DOE/OSTI	12690

1	DOE/AL/NMSP	S. Arp
1	DOE/AL/WSD	G. V. Binns
1	DOE/AL/WSD	S. M. Nunley