SANDIA REPORT
SAND97-1670 • UC-607
Unlimited Release
Printed July 1997

Gas Flow Characterization of Restrictive Flow Orifice Devices

Roger D. Shrouf, Shane R. Page

Prepared by
Sandia National Laboratories
Albuquerque, New Mexico 87185 and Livermore, California 94550

Sandia is a multiprogram laboratory operated by Sandia Corporation, a Lockheed Martin Company, for the United States Department of Energy under Contract DE-AC04-94AL85000.

Approved for public release; distribution is unlimited.

Sandia National Laboratories

Issued by Sandia National Laboratories, operated for the United States Department of Energy by Sandia Corporation.
NOTICE: This report was prepared as an account of work sponsored by an agency of the United States Government. Neither the United States Government nor any agency thereof, nor any of their employees, nor any of their contractors, subcontractors, or their employees, makes any warranty, express or implied, or assumes any legal liability or responsibility for the accuracy, completeness, or usefulness of any information, apparatus, product, or process disclosed, or represents that its use would not infringe privately owned rights. Reference herein to any specific commercial product, process, or service by trade name, trademark, manufacturer, or otherwise, does not necessarily constitute or imply its endorsement, recommendation, or favoring by the United States Government, any agency thereof, or any of their contractors or subcontractors. The views and opinions expressed herein do not necessarily state or reflect those of the United States Government, any agency thereof, or any of their contractors.

Printed in the United States of America. This report has been reproduced directly from the best available copy.

Available to DOE and DOE contractors from
Office of Scientific and Technical Information
P.O. Box 62
Oak Ridge, TN 37831

Prices available from (615) 576-8401, FTS 626-8401

Available to the public from
National Technical Information Service
U.S. Department of Commerce
5285 Port Royal Rd
Springfield, VA 22161

NTIS price codes
Printed copy: A03
Microfiche copy: A01

SAND97–1670 Distribution
Unlimited Release Category UC–607
Printed July 1997

Gas Flow Characterization of Restrictive Flow Orifice Devices

Roger D. Shrouf
Safety Engineering Department
Sandia National Laboratories
P. O. Box 5800
Albuquerque, NM 87185-1045

Shane R. Page
Albuquerque Valve & Fitting Company
Albuquerque, NM 87119

Abstract

A restrictive flow orifice (RFO) can be used to limit the uncontrolled release of system media upon component or line failure in a gas handling system and can thereby enhance the system safety. This report describes a new RFO product available from the Swagelok Companies and specifies the gas flow characteristics of this device. A family of four different sizes of RFO devices is documented.

* The restrictive flow orifices used in this project were manufactured by and provided courtesy of the CAJON Company.

Acknowledgment

The authors thank the CAJON Company for providing the proto-type RFOs used in this effort. The authors also thank William Anderson and Robert Romero of the Primary Standards Laboratory, in the Primary Physical Standards Department at SNL/NM for their expertise and assistance in performing the flow measurements for this project.

Contents

Acknowledgment ….....page 2
Nomenclature .....page 4
Introduction and Objectives .....page 5
Background .....page 5
Testing Methods .....page 6
Results .....page 6 - 9
Analysis .....page 10
Conclusions .....page 12
References .....page 13

Figures

1) Measurement Set-up ……..….page 6
2) Flow vs Pressure Data for the 0.010 inch diameter orifice …..……page 8
3) Flow vs Pressure Data for the 0.020 inch diameter orifice ..……page 8
4) Flow vs Pressure Data for the 0.030 inch diameter orifice ……..page 9
5) Flow vs Pressure Data for the 0.060 inch diameter orifice ……..page 9
6) Example RFO Application .. ……page 11

Tables

1) Flow vs Pressure Data for all RFO sizes ……page 6
2) RFO Sizes and Equivalent C_v Numbers ……..page 7

Nomenclature

The following acronyms and abbreviations are used throughout this report and are defined here for the reader's convenience.

C_v - flow coefficient. For gases, this is defined as the flow of air in standard cubic feet per minute at standard conditions with a one psi pressure differential across the device

MAWP - Maximum Allowable Working Pressure

NPT - National Pipe Taper or National Pipe Thread

psig - pounds per square inch, gauge

psia - pounds per square inch, absolute

RFO - Restrictive Flow Orifice

scfm - standard cubic feet per minute

SNL - Sandia National Laboratories

Specific Gravity - (of a gas relative to air) is the ratio of the molecular weight of the gas to the molecular weight of air [2]

UHP - Ultra High Purity, implies electropolished internal surfaces

Introduction and Objectives

A new product exists for a restrictive flow orifice (RFO) made by the Cajon Company. Flow vs pressure measurements for clean, dry air were recorded in order to establish a matrix of data to be used for the proper selection of RFOs in gas handling systems.

Background

Flow limitation is useful to address a number of safety related design concerns of gas handling systems. Previous commercially available RFO devices were primarily suited for ultra high purity (UHP) piping applications. Typically, 1) RFO devices were installed into a gas cylinder valve or, 2) an excess flow valve or excess flow switch provided the desired flow limitation. The Cajon RFOs described here are available in 316 stainless steel with ¼″ NPT connections which are suitable for use in research grade gas handling systems incorporating commonly employing pipe thread and or Swagelok type of connections.

The rationale for using an RFO device is derived from previously encountered incidents on SNL installations. Applications where RFO devices would enhance the system safety include:

1) limiting the accidental release of a hazardous gas (flammable, toxic, etc.) resulting from regulator or other component failure.

2) restricting flow in a system in order to assure adequate pressure relief valve sizing and system over pressure protection.

3) restricting flow from large volume sources, such as from “house” nitrogen gas.

The RFOs are available with inlet connections of ¼ male NPT and outlet connections of ¼ female NPT. The pressure rating for these RFOs (all sizes) is 4900 psig. The nominal RFO sizes available are 0.010″, 0.020″, 0.030″, 0.060″. Actual measured orifice sizes and equivalent C_v values are listed below in Table 2.

Testing Methods

The following configuration was used to measure the characteristics of pressure and flow for the four different RFO devices. The measurements were performed by the Primary Physical Standards Department at SNL/NM. Clean, dry air was passed through the RFOs over an inlet pressure range from 25 psia to 2000 psia. Due to the flow capacity limitations of the measurement equipment, the 0.060 inch RFO was measured only to 1000 psia.

The test gas was then collected in a volumetric standard chamber, where measurements produced a rate of flow in standard cubic feet per minute (SCFM) at 21.1 degrees centigrade and at 14.69 psia. The standard configuration with a ¼ male NPT inlet and a ¼ female NPT outlet connections was used.

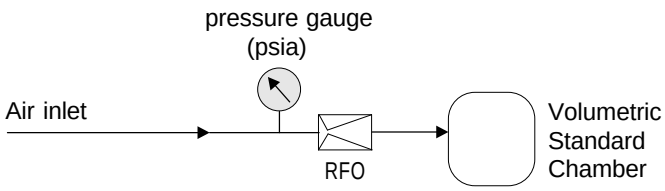

Figure 1 - test measurement configuration

Results

Table 1 - Pressure and Flow Data

RFO = 0.010″		RFO = 0.020″		RFO = 0.030″		RFO = 0.060″	
psia	flow (scfm)	psia	flow (scfm)	psia	flow (scfm)	psia	flow (scfm)
25.0	0.038	25.0	0.156	25.0	0.312	25.0	1.265
50.0	0.077	50.0	0.313	50.0	0.626	50.0	2.534
100.0	0.155	100.0	0.637	100.0	1.280	100.0	5.077
299.7	0.483	299.7	1.916	299.7	3.790	299.5	15.025
500.4	0.798	499.4	3.207	499.2	6.424	499.2	25.981
748.0	1.20	748.9	4.996	748.8	9.636	748.8	38.852
988.6	1.60	999.5	6.569	998.5	13.367	998.4	53.3
1497.7	2.44	1497.7	9.951	1497.7	19.980	no data	no data
1996.9	3.293	1996.9	13.510	1996.8	26.181	no data	no data

The stamped sizes of the RFOs are nominal values only. The actual orifice sizes of the flow restrictors are listed below, as measured by an optical comparator.

The calculated equivalent C_v of each RFO is listed:

Table 2 - Calculated Flow Coefficients

Nominal RFO Designation	Actual RFO Orifice Size	Calculated Average C_v
0.010 ″	0.0099 ″	0.00343
0.020 ″	0.0209 ″	0.01396
0.030 ″	0.0305 ″	0.02779
0.060 ″	0.0612 ″	0.11070

The equivalent C_v numbers were averaged over the entire pressure range and were calculated using the following formula [1]:

$$Q = 0.471 \bullet N_2 \bullet C_v \bullet P_1 \bullet (1/ S_g \bullet T_1)^{1/2}$$

where:

Q = flow rate (scfm)
N_2 = 22.67 (constant for units)
C_v = flow coefficient
P_1 = inlet pressure (psia)
S_g = specific gravity of the gas relative to air (air = 1)
T_1 = absolute upstream temperature (°R)

Solving for $C_v = Q \div [0.471 \bullet N_2 \bullet P_1 \bullet (1/ S_g \bullet T_1)^{1/2}]$

The data table and graphs here are based on clean, dry air flow through the RFOs. Use the following formula [2] to compensate for a different gas species:

$$Q_g = Q_{air} \bullet (1/S_g)^{1/2}$$

where:

Q_g = flow of the specific gas (scfm)
Q_{air} = flow of air (scfm)
S_g = specific gravity of the gas relative to air

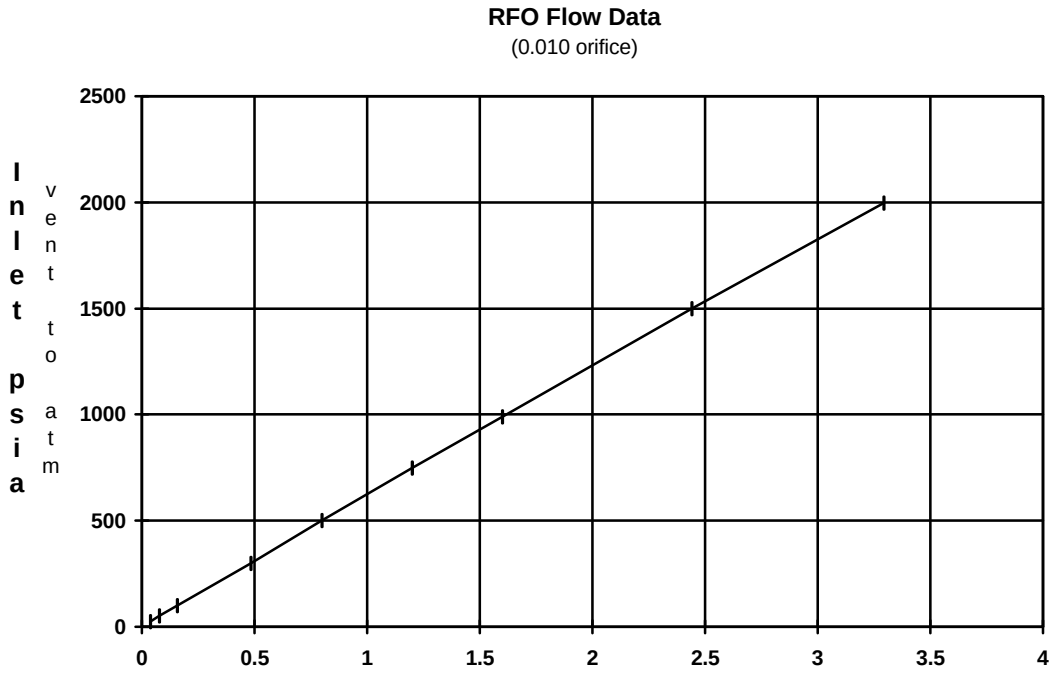

Figure 2 - Flow (scfm)

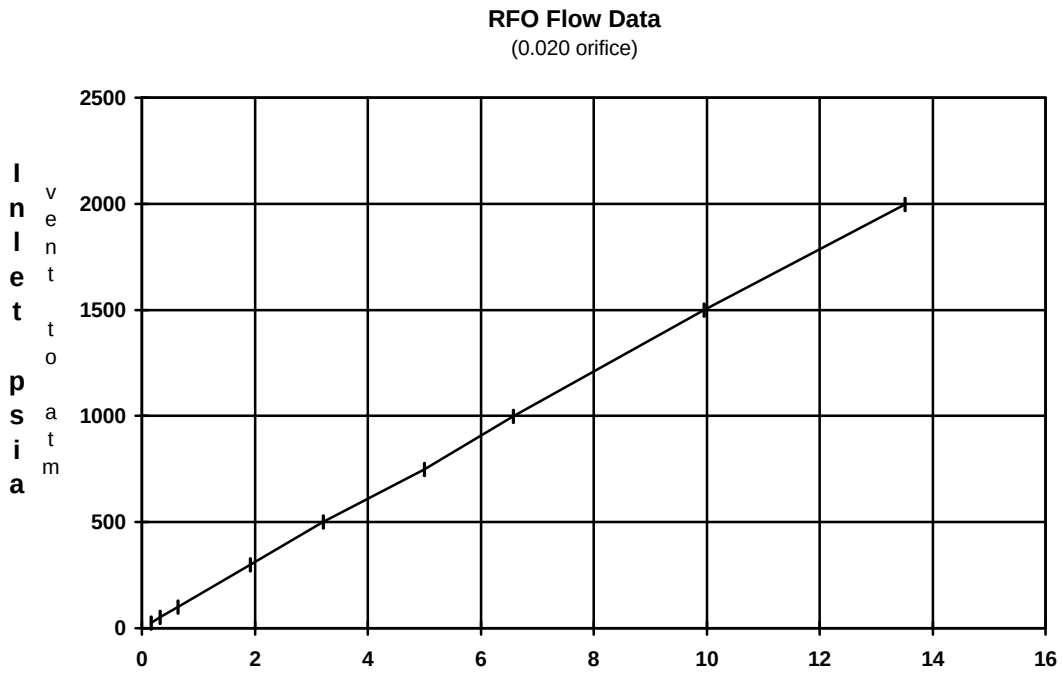

Figure 3 - Flow (scfm)

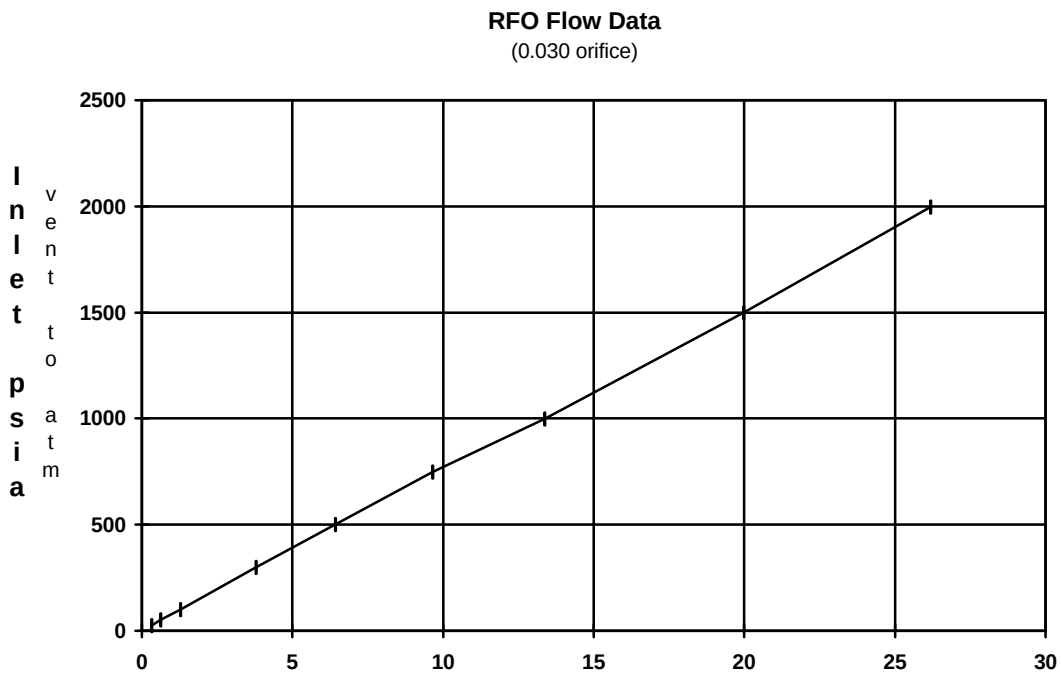

Figure 4 - Flow (scfm)

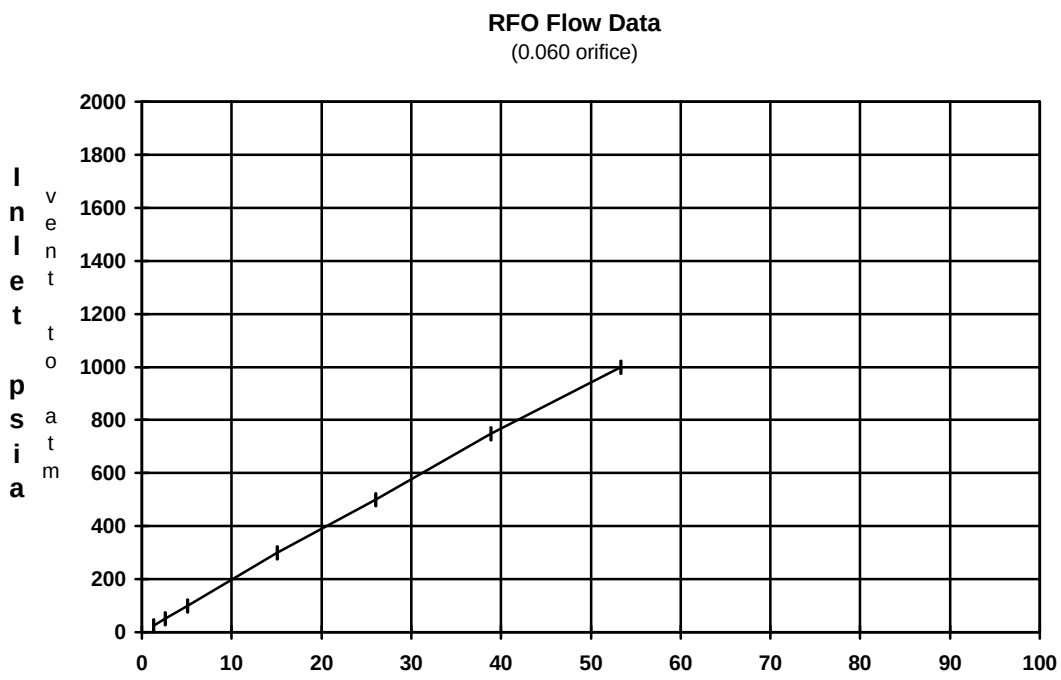

Figure 5 - Flow (scfm)

Analysis

The data shows an essentially linear response for the pressure and flow ranges tested. The average C_v values can be used to calculate flows for applications requiring flow limitation, or the graphs can be used to interpolate predicted flows. The flow tests were conducted with a straight through ¼ ″ piping system, the same size as the RFO connections. The use of additional valves, fittings, elbows or tees, size adapters, etc… in a laboratory system will affect the system flow.

One problem encountered during the measurements was related to the use of TFE tape when assembling the measurement system components. Care must be taken to prevent even small shreds of TFE tape from entering the system which could clog the RFO. A good quality TFE tape (meeting MIL-T-27730A spec), properly applied, will minimize these problems. This is especially important for the 0.010 ″ size.

Another issue identified during the measurements was related to the machining tolerance allowed for the smallest RFO size. One of the proto-type RFOs had an orifice diameter of 0.0084 ″ instead of the nominal 0.010 ″ orifice size. This resulted in a flow of approximately 36% lower than the expected value. Data published (see Figure 2 on page 8) for the nominal 0.010 ″ RFO size was based on an actual size of 0.0099 ″ - as measured by optical comparator technique.

No attempt was made to characterize the flow of liquids through these devices. However, it is believed that common conversion factors could be used to predict the flow of water or other compatible liquids through the devices.

An example application of an RFO device is depicted below in Figure 6. The regulator selected has a C_v = 0.05. This would allow a calculated air flow of ≈ 46 scfm at a maximum inlet pressure of 2000 psig if the regulator failed full open. Without the RFO, an appreciable pressure would accumulate across the relief device at such a high flow.

The pressure relief valve chosen for this example is a Nupro CH4 series pressure relief valve available JIT from Albuquerque Valve & Fitting, and is set at 10 psig cracking pressure. The flow curves for this valve show that the actual system pressure could rise to ≈ 160 psig with this regulator failure scenario. This would exceed the MAWP of the downstream equipment and would not be an acceptable over pressure protection design.

Installing the RFO (0.020″ orifice size) as shown would limit the system flow to ≈ 13.5 scfm for the same regulator failure scenario. This would result in a system pressure rise to ≈ 28 psig, and would represent an acceptable over pressure protection design for downstream equipment. If the 0.010″ size RFO were selected, the maximum system flow would be limited to ≈ 3.3 scfm, and the resultant pressure rise would be further minimized to ≈ 18 psig.

This approach assumes that the installation of a given RFO would still allow the gas flow required for normal system operation. The location of an RFO within a system is a function of the system hazards and may vary depending on the design intent for the specific system. In this application, the RFO is located immediately downstream of the regulator and is intended to limit the gas flow in a worst case regulator failure (i.e., regulator fails in the full open position) to a range that is acceptable according to the pressure relief valve's flow capacity.

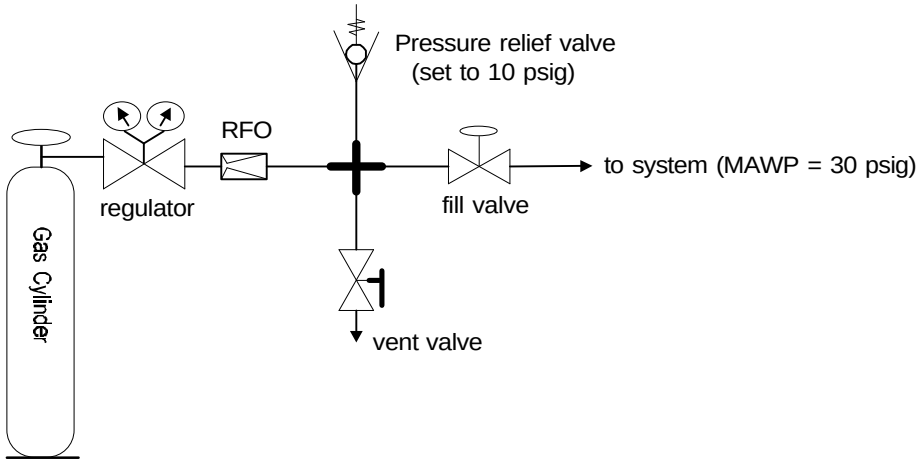

Figure 6 - Example RFO Application

Conclusions

These RFO devices can enhance system safety by providing a predictable system flow limitation. Flow parameters are basically linear over the common pressure ranges of one atmosphere to 2000 psia. The inlet and outlet connection styles available for these RFOs will allow the user to easily position this device into gas handling systems commonly used in the laboratory environment.

Careful consideration should be given when selecting the 0.010″ RFO due to its small orifice which lends itself to potential blockage by TFE tape or other particulate. An inline filter located upstream may be appropriate for this size RFO. It would appear the 0.020″ or the 0.030″ RFO sizes would appear to be appropriate for the majority of pressure systems at SNL.

Sandia is a multiprogram laboratory operated by Sandia Corporation, a Lockheed Martin Company, for the United States Department of Energy under Contract DE-ACO94AI.85000.

References and Bibliography

1) Technical Bulletin No. 8, August, 1994 - Valve Sizing Graphs, the Swagelok Companies.

2) Tescom Corporation "Engineering Data For Computing Gas And Liquid Flow Through Regulators And Valves" - Form 567 - B Revised January, 1985.

Distribution

20		Shane R. Page Albuquerque Valve & Fitting Co. 2451 Alamo SE Albuquerque, New Mexico 87106
50	MS 1045	Roger Shrouf, 7524
1	MS 1045	Ken Miles, 7524
1	MS 0443	G. Wellman, 9117
1	MS 0559	J. Munford, 1484
1	MS 0483	N. Hansen, 2165
1	MS 0967	R. Habbit, 5725
1	MS 0933	S. Walcott, 7821
1	MS 0942	M. Quinlan, 7921
1	MS 9221	A. Lau, 8421
1	MS 0615	D. Roach, 9752
1	MS 1143	L. King, 9700
1	MS 9018	Central Technical Files, 8940-2
5	MS 0899	Technical Library, 4916
2	MS 0619	Review & Approval Desk, 12690 For DOE/OSTI