SANDIA REPORT

SAND97–0881 • UC–122
Unlimited Release
Printed April 1997

Fiber Optic Communication in Borehole Applications

R. J. Franco, J. R. Morgan

Prepared by
Sandia National Laboratories
Albuquerque, New Mexico 87185 and Livermore, California 94550

Sandia is a multiprogram laboratory operated by Sandia Corporation, a Lockheed Martin Company, for the United States Department of Energy under Contract DE-AC04-94AL85000.

Approved for public release; distribution is unlimited.

Sandia National Laboratories

SF2900Q(8-81)

Issued by Sandia National Laboratories, operated for the United States Department of Energy by Sandia Corporation.
NOTICE: This report was prepared as an account of work sponsored by an agency of the United States Government. Neither the United States Government nor any agency thereof, nor any of their employees, nor any of their contractors, subcontractors, or their employees, makes any warranty, express or implied, or assumes any legal liability or responsibility for the accuracy, completeness, or usefulness of any information, apparatus, product, or process disclosed, or represents that its use would not infringe privately owned rights. Reference herein to any specific commercial product, process, or service by trade name, trademark, manufacturer, or otherwise, does not necessarily constitute or imply its endorsement, recommendation, or favoring by the United States Government, any agency thereof, or any of their contractors or subcontractors. The views and opinions expressed herein do not necessarily state or reflect those of the United States Government, any agency thereof, or any of their contractors.

Printed in the United States of America. This report has been reproduced directly from the best available copy.

Available to DOE and DOE contractors from
Office of Scientific and Technical Information
P.O. Box 62
Oak Ridge, TN 37831

Prices available from (615) 576-8401, FTS 626-8401

Available to the public from
National Technical Information Service
U.S. Department of Commerce
5285 Port Royal Rd
Springfield, VA 22161

NTIS price codes
Printed copy: A03
Microfiche copy: A01

Distribution
Category UC-122

SAND97-0881
Unlimited Release
Printed April 1997

Fiber Optic Communication in Borehole Applications

R. J. Franco and J. R. Morgan
Telemetry Technology Development Department, 2664
Sandia National Laboratories
P. O. Box 5800
Albuquerque, NM 87185-0987

Abstract

The Telemetry Technology Development Department (2664) have, in support of the Advanced Geophysical Technology Department (6114) and the Oil Recovery Technology Partnership, developed a fiber optic communication capability for use in borehole applications. This environment requires the use of packaging and component technologies to operate at high temperature (up to 175°C) and survive rugged handling. Fiber optic wireline technology has been developed by The Rochester Corporation under contract to Sandia National Labs and produced a very rugged, versatile wireline cable. This development has utilized commercial fiber optic component technologies and demonstrated their utility in extreme operating environments.

TABLE OF CONTENTS

I. Project Objectives And Design Philosophy 4
I.1. Project Background 4
I.2. Project Objectives 4
I.3. Development Approach 5
I.4 Fots System Overview 6
II. Borehole Fiber Optic Electronics Design and Test 8
II.1. FOTS Electronics Design Issues 8
II.2. Selection of Fiber Optic Receivers and Transmitters 8
II.3. Temperature Testing Of Fiber Optic Transmitters 10
II.4. Temperature Testing Of Fiber Optic Receivers 16
III. Borehole Fiber Optic System Applications 20
III.1. Fiber Optic Wireline Development 20
III.1.a. Specifications for the Rochester Wireline 20
III.1.b Comments on the Rochester Development 20
III.2. Mlsr Fiber Optic Transmission Interface 21
III.2.a MLSR Fiber Optic Electronics Design and Test 22
III.2.b MLSR/FOTS Mechanical Design 22
III.2.c MLSR Field Test Operations with the Rochester Wireline 24
III.3. Crada Source Fiber Optic System 24
III.3.a CRADA Source FOTS Specifications 24
III.3.b CRADA Source Electronics Design 26
III.3.c. CRADA Source FOTS Environmental Testing 27
IV. References: 27
Appendices 31
Appendix A. Fiber Optics Components Contact List 31
Appendix B. MLSR FOTS Electronics Schematics 32
Appendix C. CRADA Source FOTS Electronics Schematics 36
Appendix D. CRADA Source FOTS Altera Programming Files 41
Distribution: 45

TABLE OF FIGURES

Figure I.1: Fiber Optic Transmission System F. O. T. S. 7
Figure II.1: FOTS Fiber Optic Transmitter vs. Temperature Test Setup 12
Figure II.2: FOTS Transmitter Optical Power vs. Temperature 13
Figure II.3: Laser Diode TS2143 Input Current vs. Temperature 14
Figure II.4: Combined Input Current Litton TX5006L & Laser Diode IRE-160 15
Figure II.5: FOTS Fiber Optic Receiver Sensitivity Test Setup 17
Figure II.6: Optical Receiver Sensitivity vs. Temperature 18
Figure II.7: Fiber Optic Transmitter/Receiver Pair Litton TX5006L & RX5417 19
Figure III.1: FOTS Vibration Environment 28
Figure III.2: FOTS Vibration Environment 29
Figure III.3: FOTS Vibration Environment 30
Figure B.1: MLSR Fiber Optics Electronics Schematic 33
Figure B.2: MLSR Fiber Optics Electronics Schematic 34
Figure B.3: MLSR Fiber Optics Electronics Schematic 35
Figure C.1: Pelton/Sandia Interconnection Diagram for CRADA Source 37
Figure C.2: CRADA Source PC Board Dimensions 38
Figure C.3: CRADA Source Fiber Optics Schematics 39
Figure C.4: CRADA Source Fiber Optics Schematics 40
Figure D.1.a: Altera EP-610 Design File 42
Figure D.1.b: Altera EP-610 Design File 43
Figure D.1.c.: Altera EP-610 Design File 44

TABLE OF TABLES

Table II.1: Optical Power Budget for MLSR (1300 nm) 9
Table II.2: Optical Power Budget for CRADA Source (1300 nm) 9
Table III.1: Fiber Optic Wireline Specifications 21
Table III.2: MLSR/FOTS Specifications 23
Table III.3: CRADA Source General Specifications 24
Table III.4: CRADA Source Optical Specifications 25
Table III.5: CRADA Source Electrical Specifications 25
Table III.6: CRADA Source FOTS Signal List 26
Table A.1: Contact List for FOTS Suppliers and Contractors 31

I. Project Objectives And Design Philosophy

I.1. Project Background

Interest in high speed data transmission for seismic applications has a long history and has recently elevated the interest in utilizing fiber optic technologies in this arena. Transmission of digital data over long copper lines has been heavily developed and optimized. The upper data rate limit on copper wireline is well below 1 Mbit/sec. The high bandwidth and noise immunity of fiber optic communication systems offers clear advantages to borehole applications and could easily achieve data rates to 50 Mbits/sec (or more).

In a previous program, the Cross-Well Forum funded development of the Multi-Level Seismic Receiver (MLSR) [I.1]. The MLSR streams seismic data to the surface without buffering, and thus requires a 5 Mbit/sec transmission rate. This offers several key operational advantages to the receiver operation. The most significant being that down-hole memory capacity is not a recording limit and downhole processing requirements are minimized. Other seismic receiver applications could benefit from this technology and several other companies are already pursuing fiber optic capabilities for borehole data transmission. The MLSR has been successfully deployed with the Chevron fiber optic wireline which was developed in the 1970s.

Another project associated with the Cross-Well Forum has provided an application for fiber optic transmission over a wireline. The CRADA Source project has an interest in minimizing the downhole processing electronics required to actuate the hydraulic vibrator on the CRADA Source. The high bandwidth communication afforded by fiber optic transmission over the wireline allows the vibrator control electronics to be packaged in uphole controllers, minimizing the signal processing circuitry required to operate in the high temperature downhole environment. Because the wireline is included in the feedback loop of the vibrator control system, wide bandwidth fiber optic data transmission is required for both up and down links in this application. The MLSR and CRADA Source program have driven the interest in fiber optic communication in borehole applications and are the primary reason that the Cross-Well Forum has encouraged funding for this development.

I.2. Project Objectives

The primary goal of this development is to demonstrate a rugged and reliable fiber optic transmission system for operation in borehole applications. The advantages of fiber optic transmission in this application are universally accepted as highly desirable. The key problems to be addressed in this area are development and test of optical fibers and electro-optic components to operate up to the 175° C range. Another challenge is to develop wireline assembly techniques which protect the optical fibers from damage due to load stress or handling. The development of a pressure sealed electro-optical connector also presents a significant technical

challenge. These are the primary technical barriers which have slowed the adoption of fiber optic communication in borehole applications.

The objective of this project was to develop and environmentally test the key hardware elements of a fiber optic transmission system. The following major design goals were established for the borehole Fiber Optic Transmission System (FOTS) :

(1) Demonstrate Electro-Optic Components in Borehole environments.

(2) Develop a commercial supplier for rugged, fiber optic wireline cable.

(3) Demonstrate Digital Communication at bit rates from 500 kbits/sec up to 20 Mbits/sec.

(4) Verify operation with bit error rates of less than 10E-08 for operation at 175°C.

(5) Develop packing and electronics for FOTS application with the MLSR Receiver and the Cross-Well CRADA Seismic Source.

The system developed under this program generally meets all of the above goals. A detailed set of specifications that describes the conformance of the system to these goals is provided in Chapter III.

I.3. Development Approach

The engineering approach used for the FOTS development was to identify and utilize existing suppliers of optical fibers, opto-electric components and wireline cable. This approach allowed the development to leverage off of existing technology, where available. The project resources were focused on development of the technologies needed for the program, but not currently available. This allowed the efficient development of a system suitable for rugged borehole applications.

In searching the market for electro-optic components for this application, we quickly observed that commercial suppliers will test and provide component specifications to 125° C. This response is typical in high temperature electronics development and requires the screening of suppliers and component technologies for high temperature operation. This screening and testing process led to the selection of Litton components in the FOTS project (section II.2). The FOTS development also relied heavily on existing industry expertise in the wireline area. A competitive bid process led to the award of a development contract to The Rochester Corporation, allowing them to develop a very rugged, high temperature fiber optic wireline (section III.1).

I.4 FOTS System Overview

The basic elements of a fiber optic communication system are shown in Figure I.1. Each digital communication link in FOTS requires a dedicated optical fiber connected with an optical transmitter and receiver on each end of the fiber. The FOTS requires that the data input be a synchronous, continuous bitstream with constant bit width and no time gaps in the modulation. A companion clock is also required to convert the bitstream to a Manchester code. The output of the optical receiver must then be decoded to recover the bitstream and clock for recording or processing interfaces in uphole equipment. The use of optics in these systems is limited to the long wireline deployment run from the cable spool to the top of the downhole tool string (3 to 6 km). Use of fibers in interconnecting cables in downhole tool strings is attractive in several ways and is being considered, but this approach suffers from the excessive cost in developing and maintaining optical connectors. The downhole end of the fiber optic wireline is terminated into a high pressure connector with both optical and electrical contacts. The uphole end terminates in a spooling drum which is usually deployed on a winch truck. The use of fiber optic slip rings allows the optical signal to be passed through in the same housing which contains the electrical contacts required for power and other electrical signals. This eliminates the need for any optical processing inside the cable drum. This approach allows the optical signal to pass all the way to the uphole signal processing area, where the fiber optic receiver would be located. The output of the optical receiver is then decoded to recover the clock and serial bitstream in its original format, which can be recorded or processed by uphole equipment. The similarity in the requirements of the MLSR and CRADA Source fiber systems allowed them to be based on a common design.

Figure I.1: Fiber Optic Transmission System F.O.T.S

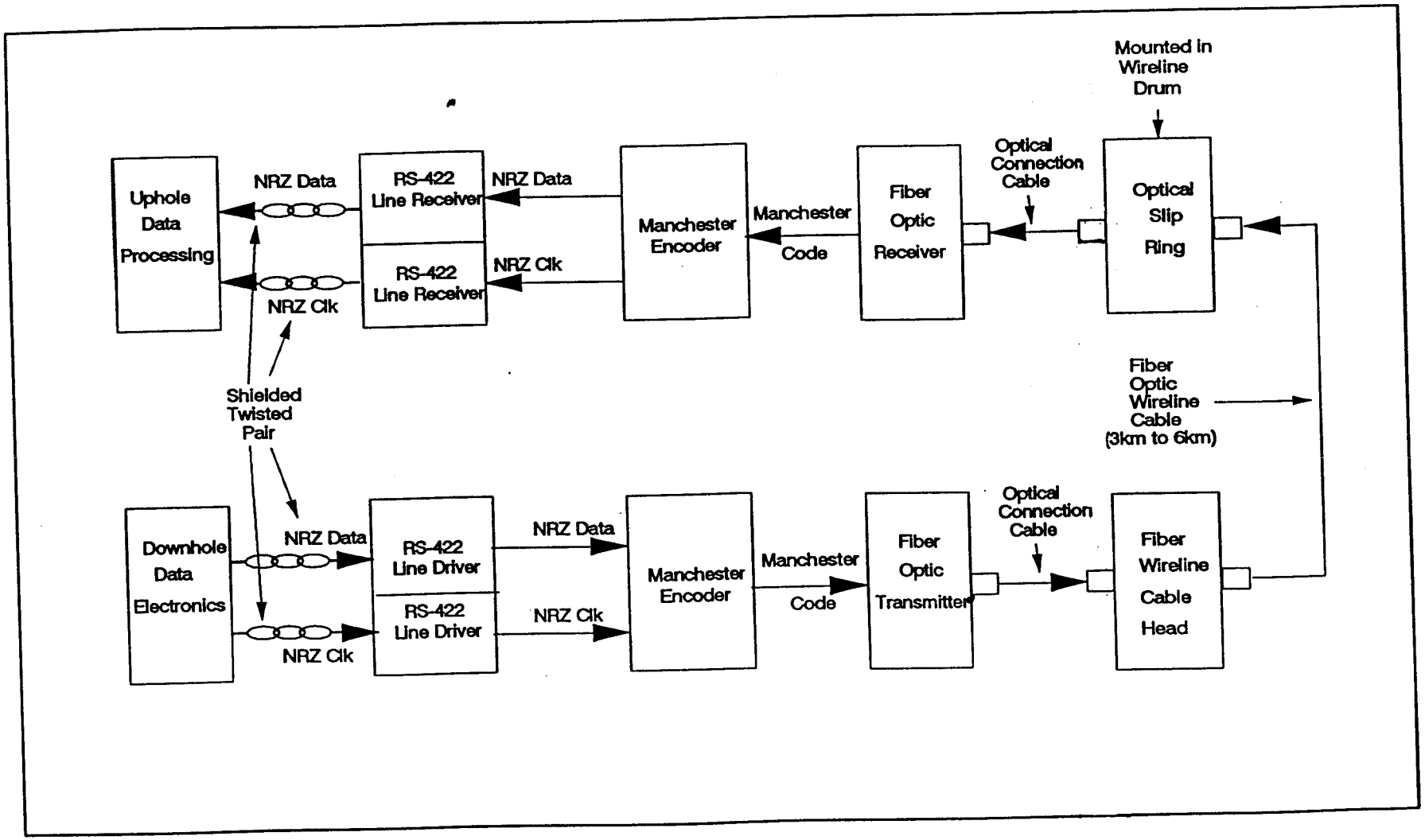

II. Borehole Fiber Optic Electronics Design and Test

II.1. FOTS Electronics Design Issues

The electronic interfaces in the FOTS are simple and straight forward, based on CMOS line driver/receiver technologies.

One key design issue to note is the need for Manchester encoding of the signals. The optical receivers are typically AC coupled devices which utilize high pass filtering of the detected signal to minimize noise. Since most digital data signals can have long strings of one or zeroes in the stream, the signal nominally requires DC response to be transmitted. However, the Manchester code can be used to generate a signal which is guaranteed to have a transition in every bit period. This eliminates the need for DC response in the fiber optic receiver. Most receivers, in fact, specify a minimum transmission bit rate in the region of 500 kbits/sec to 1 Mbit/sec and the operating limit for FOTS is 500 kbits/sec.

Another design concern in FOTS is related to Positive-Emitter-Coupled-Logic (PECL) input and output stages used in the fiber optic components. The FOTS design allows for standard TTL or CMOS inputs and outputs, with level converters included in the electronics.

Note that the FOTS electronics must survive high temperature environments. The FOTS electronics design is based on high temperature electronics design and fabrication techniques which are documented in other sources [I.1].

II.2. Selection of Fiber Optic Receivers and Transmitters

Three major criterion drove the selection of fiber optic receivers and transmitters used in the FOTS design. The first is associated with defining the optical output power and optical input sensitivity required to transmit the optical data over cables 3 to 6 km long. The second is selecting components which operate at appropriate bit rates. The third major issue is high temperature operation which is dealt with in sections II.3 and II.4. The bit rate issue was a bigger concern on the low end than it was on the high end. The requirement to operate up to 20 Mbits/sec was fairly easy, but the 500 kbit/sec lower end was close to the specification limits on many devices.

Two manufacturers were identified as having optical receivers and transmitters that meet the bandwidth requirements Litton (TX5006L and RX5417L) and Laser Diode Inc. (TS2143 and RT2714).

The optical output power and input sensitivity requirements are determined by performing an optical power link budget. This analysis allows for cable and connector losses to be considered in relation to the output and input power of the electro-optical components. The optical power budgets for the MLSR and CRADA Source systems are described in Tables II.1 and II.2.

Table II.1: Optical Power Budget for MLSR (1300 nm)

Optical Output Power(50 micron core, 105° C)	-17 dBm
Optical Input Sensitivity	-39 dBm
Optical Power Budget (-17 dBm - (-39 dBm))	22 dB
Cable Loss (3.1 km * 2.0 dB/km)	6.2 dB
Connector Loss (3 @ 1 dB/conn)	3.0 dB
Slip Ring Insertion Loss	2.5 dB
Link Margin (@ 105° C)	10.3 dB
Derate with Temp (175 - 105) ° C * .03 dB/° C	2.1 dB
Link Margin (@ 175° C)	8.2 dB

Table II.2: Optical Power Budget for CRADA Source (1300 nm)

Optical Output Power (50 micron core,105° C)	-17 dBm
Optical Input Sensitivity	-39 dBm
Optical Power Budget (-17 dBm - (-39 dBm))	22 dB
Cable Loss (6.5 km * 1.3 dB/km)	8.5 dB
Connector Loss (3 @ 1 dB/conn)	3.0 dB
Slip Ring Insertion Loss	2.5 dB (Note 1)
Link Margin (@ 105° C)	8.0 dB
Temp Derating (175 - 105) ° C * .03 dB/° C	2.1 dB
Link Margin (@ 175° C)	5.9 dB

Note 1: This specification is nominal as actual slip ring for CRADA Source design is TBD.

Consider the power budget analyses above. Note that the initial Optical Power Budget is 22 dB and is the same for both the MLSR and CRADA Source designs. This is because the same fiber optic transmitters and receivers are used in both designs. Also, it happens that the Litton and Laser Diode Inc. devices mentioned above have nearly identical optical specifications, so they were viewed as equivalent from this performance point of view. Notice, also the differences in cable length and in optical loss in dB/km. The two wirelines are manufactured with different fibers and are different lengths. The link margins of 8.2 dB and 5.9 dB over full temperature represent good engineering margins. The temperature derating coefficient of .03 dB/° C is a semiconductor property discussed in the section II.3. The connector loss term assumes three in line connections, and uses 1 dB loss for each. The three connections are at the optical transmitter, the optical receiver, and the

optical feed through on the pressure connector. Note that the insertion loss of the fiber slip ring is treated separately in both calculations. Insertion loss on optical "ST" type connectors is typically less than 0.5 dB (so, use of 1 dB is conservative). However, the optical feed through connector on a high pressure wireline connector (on the downhole end) would likely approach 1 dB.

The results of this link budget evaluation led to the conclusion that both Litton and Laser Diode Inc. devices have adequate optical and transmission characteristics to use in the FOTS design. The next section outlines the temperature performance and testing issues which led to the selection of Litton components in the design.

II.3. Temperature Testing Of Fiber Optic Transmitters

In the process of identifying commercial or military qualified electro-optic components to operate to 175° C, two basic types of device failures were observed. First, in the Laser Diode Inc. devices, it appears that the electrical interface circuitry failed (at about 125° C). There was no indication that the optical elements in the component failed. The second type failure was identified in the Litton devices and was primarily a problem with high temperature electronics assembly. The Litton problems were clearly much easier to correct, since they didn't represent fundamental design problems. Temperature testing was performed on both the Litton and Laser Diode Inc. devices to determine which was more robust with temperature. Both of the manufacturers carried operating specifications to 125° C for their components. A high temperature printed circuit board was developed with both pairs of devices installed to allow them to be tested simultaneously. The set up for the test is described in Figure II.1.

In the initial series of transmitter tests, the fiber optic attenuator was set to 1 dB loss to measure the optical output of the transmitter as a function of temperature and the receiver was left outside the oven. The transmitter was modulated with a 5.0 Mbits/sec Manchester code from the MLSR receiver system. The MLSR data stream has checksum codes embedded in the data to allow for the detection of bit errors at the data receiving end. The results of the transmitter tests are provided in Figures II.2,3,4.

Note from Figure II.2, that three optical sources were tested. The Litton and Laser Diode Inc. transmitters mentioned before and a discrete LED modulated by a semiconductor switch circuit based on power MOSFETS. The LED is the IRE-160 manufactured by Laser Diode Inc. The interest in testing a discrete LED was based on the concern that the electronics switching circuitry in front of the LED might actually fail at lower temperature than the LED. Previous experience with the MOSFET switch suggests that it will function to 200° C.

Note from Figure II.2, that the Laser Diode Inc. devices (TS2143 and IRE-160) produce higher output power initially than the Litton device. This is partially because

the Laser Diode devices have 62.5 micron fibers attached and the Litton device came with a 50 micron fiber. Since the core of the fibers to be used in both MLSR and CRADA Source are 50 micron, this apparent advantage cannot be utilized in the actual application of the system. The IRE-160 and the TX5006L degrade gracefully with temperature, while the TS2143 fails at 125° C. The input current for the TS2143 (Figure II.3.) jumps up, while the input current for the IRE-160 and TX5006L (Figure II.4) remains quite constant with temperature. This large fluctuation in the input current for the TS2143 suggests that the failure in this device was in the electronic switching circuit which modulates the LED internal to the device. Bipolar circuits tend to fail catastrophically near 125° C, so this is probably what happened here. Note the slope of the optical power derating for the other two devices is about .022 to .028 dB/° C, which is in rough agreement with the .03 dB/° C coefficient used in the link budget calculations. The transmitter outputs were also tested for bit errors in this test and found to function at better than 10 E -08.

There were some packaging concerns with the Litton components. In several early experiments, problems with low temperature solder and strain relief sleeving on the fiber were observed. The area of particular concern was in the method used to strain relief the fiber where it exits the package. Another problem was observed in the epoxy bond used to attach the fiber to the LED internal to the optical components. Since the Litton devices are packaged in metal hermetic packages, it was relatively easy for Litton personnel to open up the failed components and diagnose the internal packaging problems. Sandia project personnel were able to recommend high temperature soldering, epoxies, and sleeving ideas which allowed Litton personnel to correct the major packaging problems. Litton personnel were responsive and motivated to correct these packaging issues and ultimately produced components suitable for operation to 175° C. It seems likely that the Litton optical transmitters could operate up to 200° C, assuming that Litton corrected some remaining packaging issues.

Figure II.1: FOTS Fiber Optic Transmitter vs. Temperature Test Setup

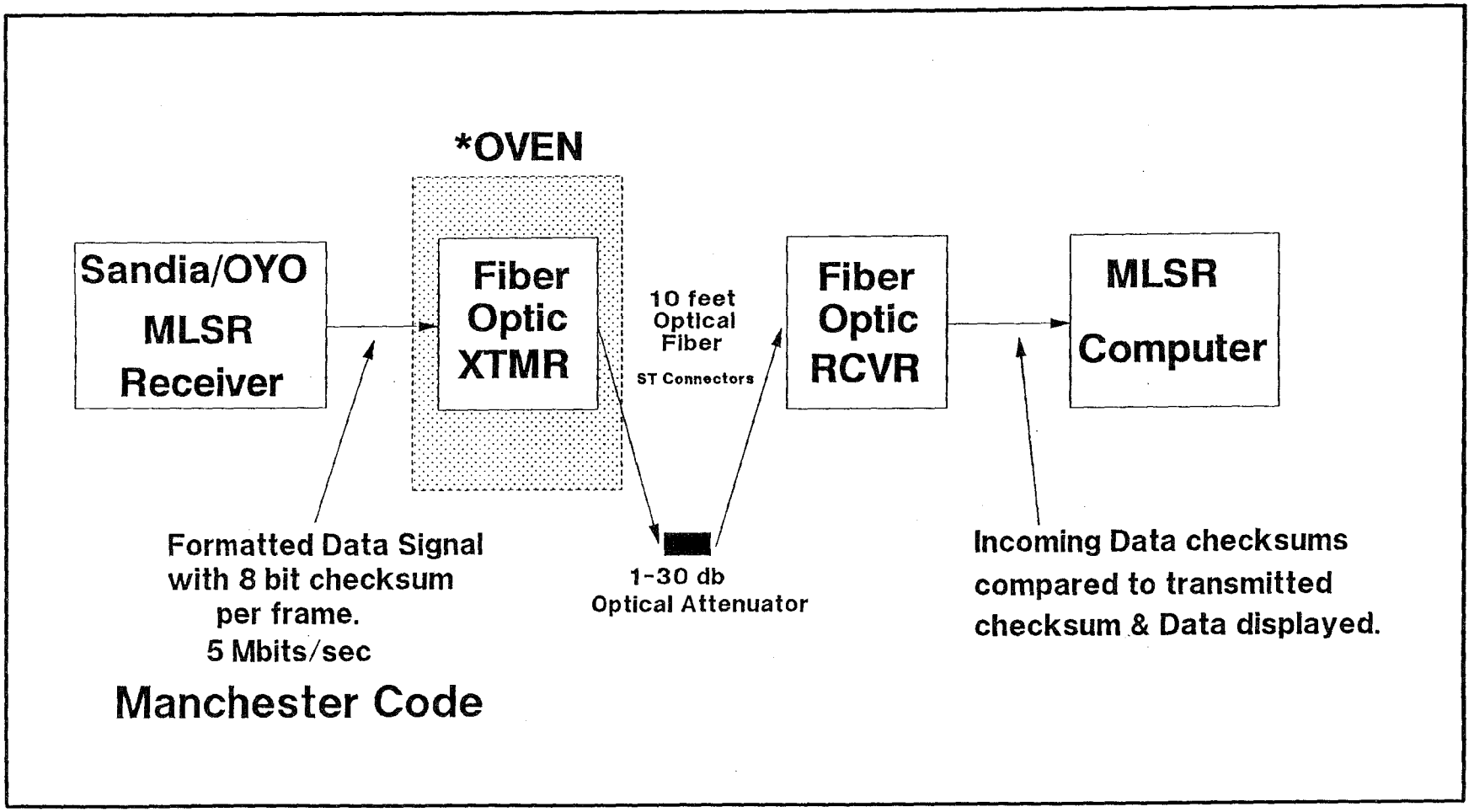

Figure II.2: FOTS Transmitter Optical Power vs. Temperature

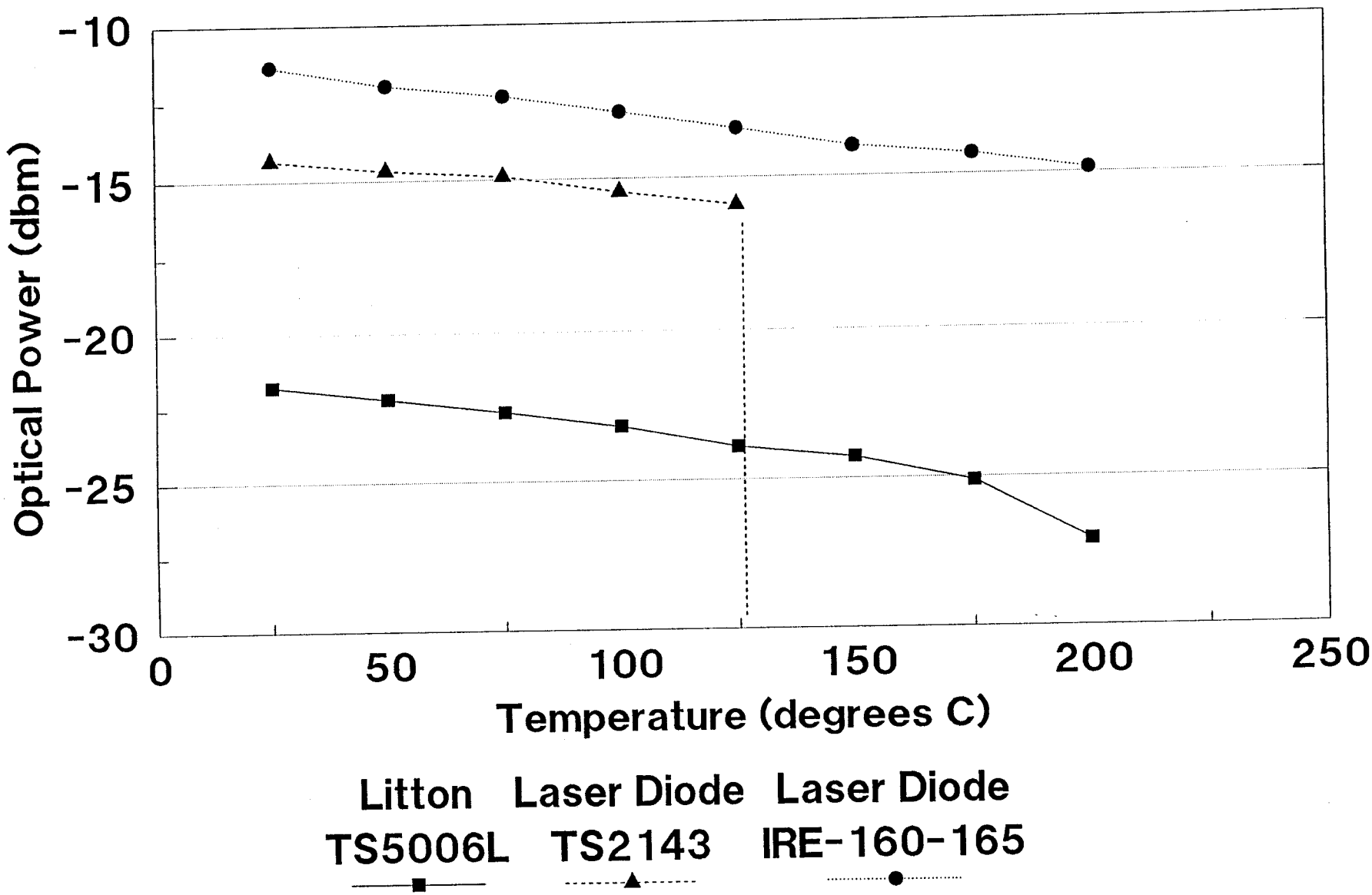

Figure II.3: LASER DIODE TS2143 Input Current vs. Temperature

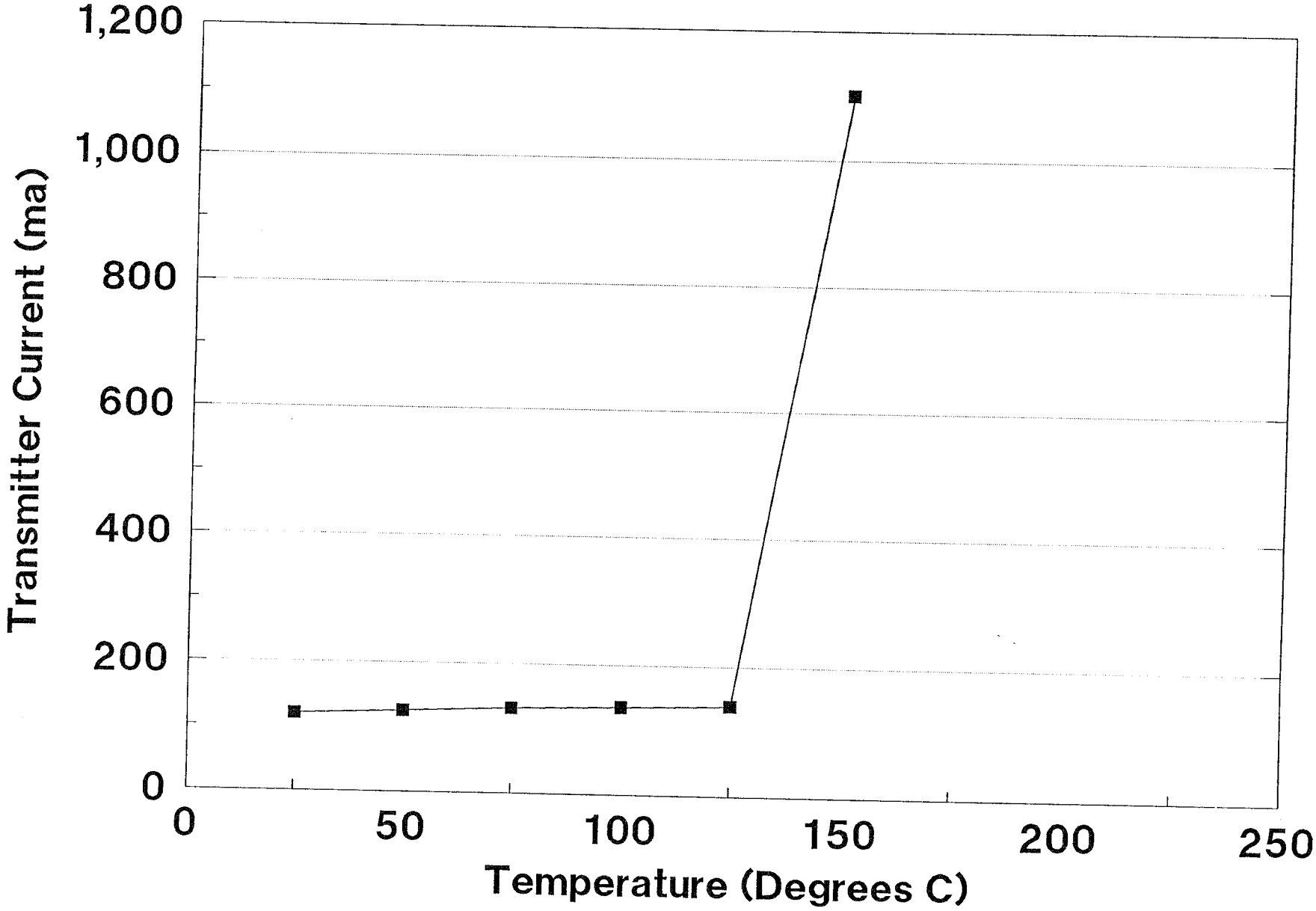

Figure II.4: Combined Input Current Litton TX5006L & Laser Diode IRE-160

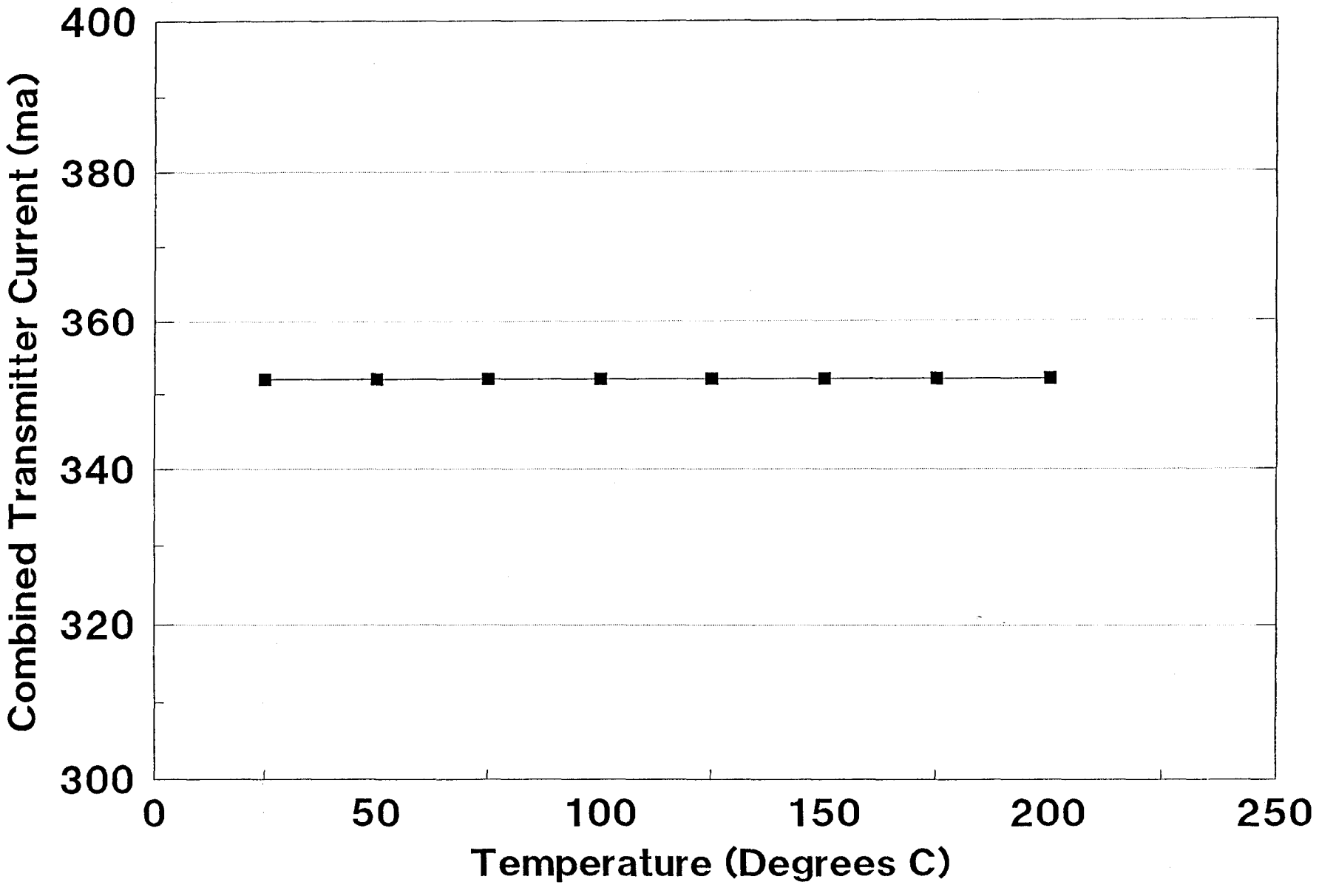

II.4. Temperature Testing Of Fiber Optic Receivers

A second series of tests were required to demonstrate that the fiber optic receivers would function at temperature with the transmitters also functioning at temperature. The setup for this test is described in Figure II.5. Note that both the receivers and transmitters are in the oven for this test. This was a functional test of the two remaining fiber optic receiver candidates, having settled on the Litton TX5006L for the transmitter. The TX5006L output was used to drive the optical inputs to the Litton RX5417L and the Laser Diode Inc. RT2714. The optical attenuator was still set at 1 dB for this experiment. The RT2714 receiver failed at 125° C in similar fashion as had been observed with the Laser Diode Inc. transmitter as discussed above. The supply current increased dramatically at 125° C and the unit failed permanently. Similar conclusions can be drawn about the failure of electronics integrated inside the device as was discussed in the previous section in the failure of the Laser Diode Inc. transmitter. The Litton RX5417 operated well up to 175° C and was chosen for use in the FOTS design.

The third series of tests demonstrated that the Litton RX5417L will maintain high optical sensitivity as operating temperature increases. The optical attenuator was used to determine the minimum optical power level required to maintain low bit error rates while operating at higher temperatures. The following tests were performed from 25° C to 175° C at 25° C increments.

1. The optical components were place in the oven and allowed to stabilize to the oven temperature.

2. The optical attenuator was set for the maximum attenuation for which the system would operate with no bit errors.

3. The attenuated light level was measured through the optical power meter.

In this way, the minimum optical power required for operation at bit error rate less than 10 E -08 was recorded and plotted against temperature. These tests were run at bit rates of 1 Mbit/sec and 5 Mbits/sec with the Manchester encoded data as described above. Figure II.6 provides the results. Note that the optical sensitivity of the RX5417L is essentially flat from ambient to 175° C. So, there is apparently no sensitivity penalty for operating the RX5417L at these elevated temperatures, and it seems likely that the optical power analysis from section II.2. will hold and the link will operate to at least 175° C. Figure II.7 illustrates the input current of the combined fiber optic system using the Litton RX5417L and the TX5006L. Note that the currents are quite stable over the temperature range of ambient to 175° C, which suggests that the devices are operating normally.

Figure II.5: FOTS Fiber Optic Receiver Sensitivity Test Setup

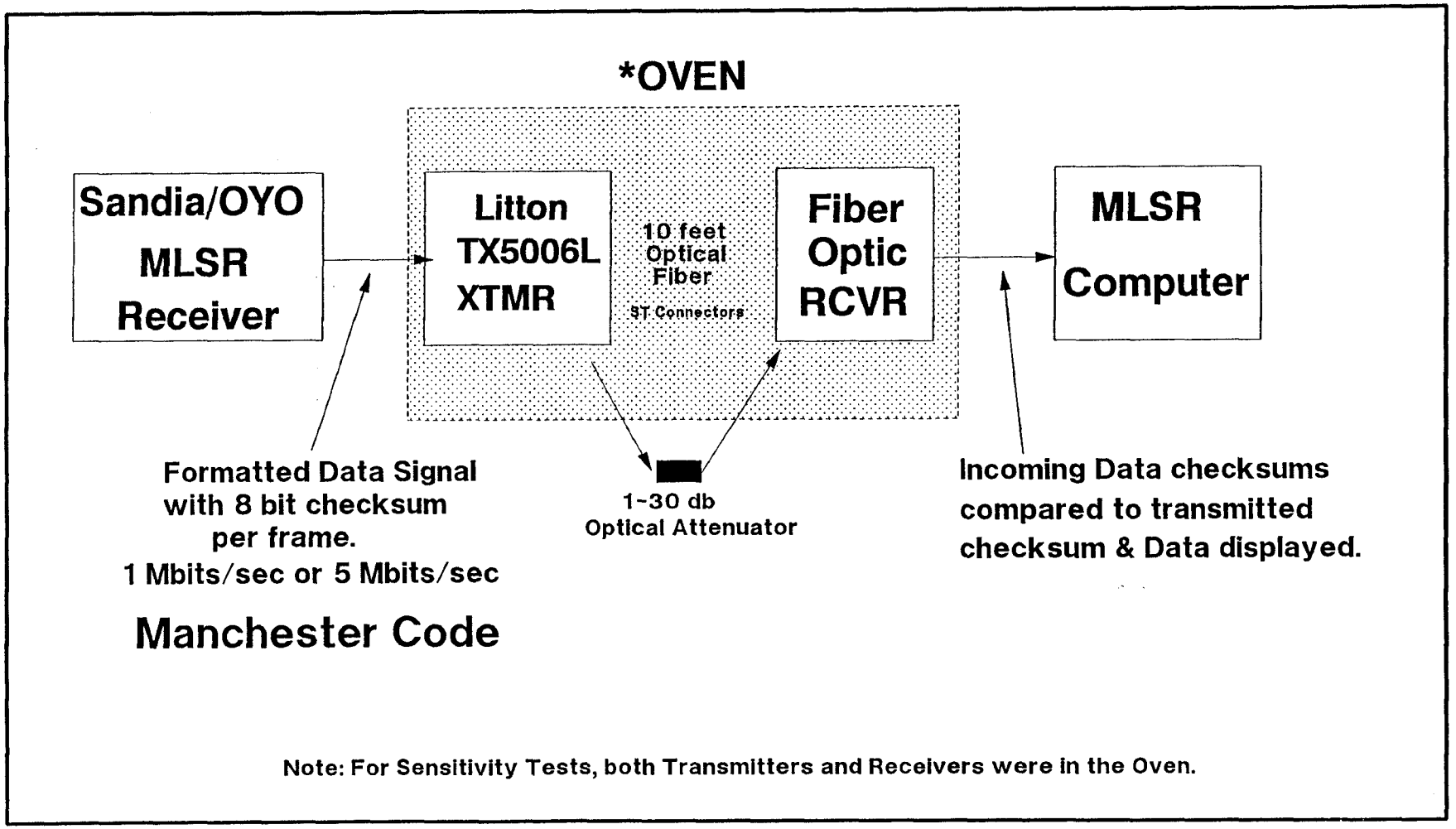

Figure II.6: Optical Receiver Sensitivity vs. Temperature

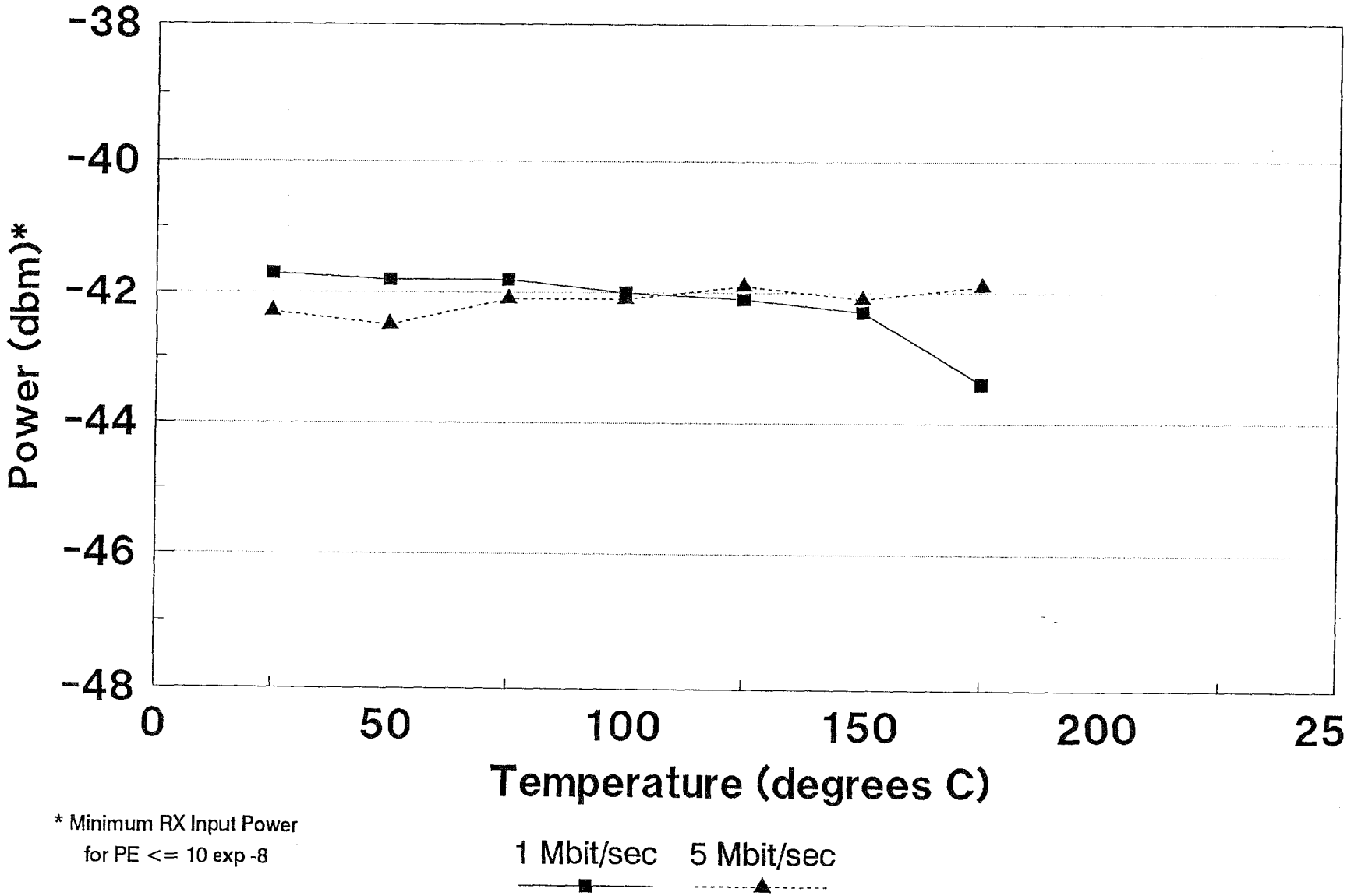

* Minimum RX Input Power
for PE <= 10 exp -8

Figure II.7: FIBER OPTIC TRANSMITTER/RECEIVER PAIR Litton TX5006L & RX5417

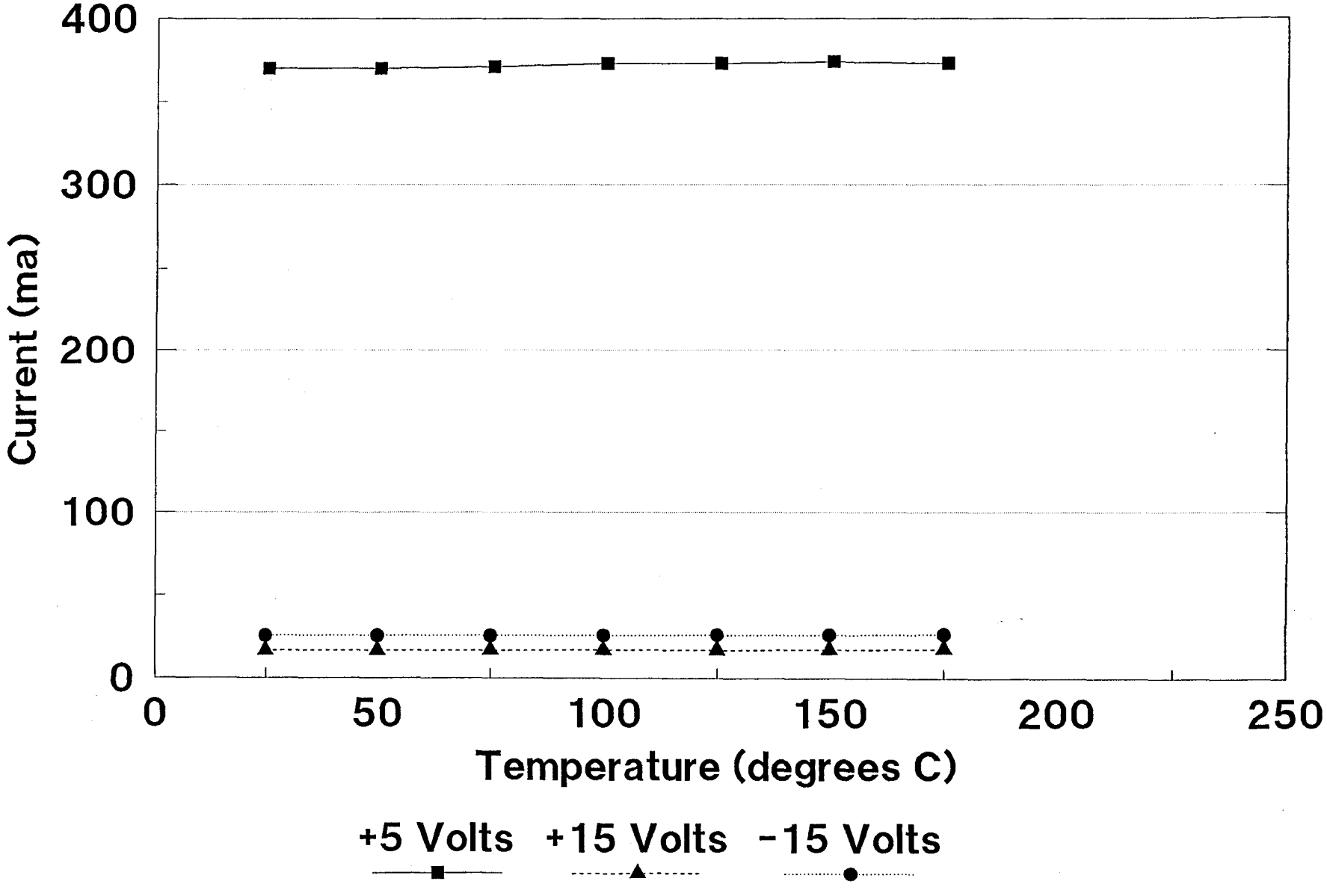

III. Borehole Fiber Optic System Applications

III.1. Fiber Optic Wireline Development

The development of the MLSR seismic receiver created an interest in developing a commercial supplier for a high temperature fiber optic wireline. The Cross-Well Forum approved a two year project, Advanced Borehole Telemetry, to pursue high temperature fiber optic component studies and the development and production of a wireline to allow fiber optic communication in borehole applications. The component technology studies described in the previous section were funded in part from the Advanced Borehole Telemetry project with additional funding provided by the CRADA Source project. The demonstration of fiber optic wireline operation in the rugged, high pressure, high temperature environment of the borehole presents significant technical challenges. A competitive bid process was used to identify the supplier of the wireline. Based on this process, a contract was awarded to The Rochester Corporation.

III.1.a. Specifications for the Rochester Wireline

The specifications of the wireline produced and delivered by Rochester are summarized in Table III.1. A wireline was fabricated, tested and shipped to Sandia to complete the contract and is in current use.

III.1.b Comments on the Rochester Development

The wireline and optical connector produced by Rochester is the end result of a very challenging technical development. Sandia is very pleased with the results of the development, which represents a significant improvement in the state of the art of wireline development.

Rochester has significant experience in the wireline and fiber optic cables business and brought essential expertise into this program. The design of this cable was fairly routine for Rochester in most areas. However, the procurement and qualification of an optical fiber operating to 175° C became a significant challenge.

Rochester identified a high temperature fiber produced by Corning, which was selected for this design. Stress and temperature testing of the fiber to 175° C provided very encouraging results. The difficulties arose when Corning applied the cladding buffer to the fiber and Rochester found "lumps" in this layer of the fiber assembly. Rochester and Corning subsequently refined the assembly process to correct the problem and Corning ultimately delivered a fiber that Rochester was able to process into the wireline.

The development of the optical termination and connector produced a robust assembly. Environmental and strength testing of the wireline assembly at Rochester were successful and Sandia took delivery of the wireline in August,

1995. Detailed specifications of the wireline are available from The Rochester Corporation (see Appendix A). The wireline has been tested at Sandia and has been integrated into field test experiments to demonstrate its capability. Section III.2 provides further information on application of the wireline with the MLSR seismic receiver.

Table III.1: Fiber Optic Wireline Specifications

Physical Characteristics:	
Length	10,000 feet (min)
Outside Diameter	0.462 " (max)
Armor	Galv. Improved Plow Steel
Weight in Air	378 lb/kft
Breaking Strength	21,000 lb
Minimum Bend Radius	18"
Recommended Working Load	5,000 lb
Electrical Conductors:	
Number Conductors	7
Conductor Size	#20 AWG
Conductor Resistance	10 W/kft
Armor Resistance	1.3 W/kft
Insulation Resistance	20,000 MW*kft
Capacitance @ 1 kHz	46 pf/ft
Recommended Working Load	3,900 lb
Optical Specifications:	
Number of fibers	1
Fiber Type	50/125 micron multi-mode (Corning)
Coating	hermetic/silicon/texel
Optical Attenuation (1300 nm)	1.0 dB/km (max, Ambient Temp) 2.0 dB/km (max, Elevated Temp)
Numerical Aperture	0.2
Bandwidth	400 MHz-km
Insertion Loss of downhole connector	1.0 dB (max @ 1300 nm)

III.2. MLSR Fiber Optic Transmission Interface

The MLSR receiver was developed in conjunction with Oyo Geospace to provided high bandwidth, high resolution borehole instrumentation. The original development unit of the MLSR has been demonstrated in a variety of field experiments in recent years. The receiver has been deployed for these experiments on the Chevron fiber optic wireline. The MLSR receiver is the ideal application to demonstrate the field utility of the Rochester fiber optic wireline. The block diagram of the MLSR FOTS is similar to that shown in Figure I.1. Note that the Manchester encoder and decoder

functions are not included on these electronics boards because those functions are provided in other MLSR hardware. The specifications for the MLSR/FOTS is included in Table III.2.

III.2.a MLSR Fiber Optic Electronics Design and Test

The electronics required for the MLSR optical system are very simple electrical interface circuits used to buffer the RS-422 standard electrical inputs to drive the fiber optic transmitter inputs and receiver outputs. The downhole "Advanced Telemetry Transmitter" circuit board includes electrical input buffers to drive the three optical transmitters installed on the board. The IRE-1306 is a discrete LED while the TX5006L and TS-2143 are integrated optical transmitters (Schematics: Appendix B). Temperature testing demonstrated that the TS-2143 won't function above 125° C and is not installed in the final design. The uphole "Advanced Telemetry Receiver" circuit board is intended to interface the optical fiber data signal to the RS-422 electrical standard. This board is not intended to operate at elevated temperatures and has several components designed only for 0° to 70° C operation. This board also includes the option to operate either of two integrated optical receivers (RX5417L or RT-2714).

III.2.b MLSR/FOTS Mechanical Design

The mechanical design required to package the FOTS for use with the MLSR receiver required the addition of the "Advanced Telemetry Transmitter" circuit board into the unit which houses the Data Formatter of the MLSR system. The MLSR data formatter housing was lengthened to accommodate this board, with the uphole end being modified to allow connection to the Rochester opto-electrical connector.

Table III.2: MLSR/FOTS Specifications

Optical Transmitter Interface:	
Power Requirements	10 to 15 Vdc (275 ma)
Input Signal Code	Manchester
Bit Rate	0.5 to 10 Mbits/sec
Signal Input Level	0/5V, Differential, 200 W (RS-422 type)
Optical Output #1	Source: Litton TX5006LPower Out: -17 dBm (1300 nm)Optical Connector: "ST" with 50 micron fiber
Optical Output #2	Source: Laser Diode Inc. IRE-1306-650Power Out: -15 dBm (1300 nm)Optical Connector: "ST" with 62.5 micron fiber
PC Board Dimensions	2.75" X 6.0" (one board)
Operating Temperature	0° to 175° C
Optical Receiver Interface:	
Power Requirements	28 Vdc (130 ma)
Output Signal Code	Manchester
Bit Rate	1.0 to 10 Mbits/sec
Signal Output Level	0/5V, Differential (RS-422 type)
Optical Input #1	Receiver: Litton RX5417LMin Power: -39 dBm (1300 nm)Optical Connector: "ST" with 50 micron fiber
Optical Input #2	Receiver: Laser Diode Inc. RT-2714-052Min Power: -40 dBm (1300 nm)Optical Connector: "ST" with 62.5 micron fiber
PC Board Dimensions	4.75" X 4.0" (one board)
Operating Temperature	0° to 70° C
Electro-Optical Slip Ring:	
Number of fibers	1
Fiber Type	50/125 micron multi-mode
Insertion Loss (1300 nm)	2.5 dB
Number of Electrical Contacts	8
Current Rating	7 Amps (continuous)
Voltage Rating	1000 V
Slip Ring Model #	Focal, Model 180/197

III.2.c MLSR Field Test Operations with the Rochester Wireline

After accepting delivery of the Rochester wireline, the fiber optic interface electronics were assembled and tested with an MLSR receiver package for operation as a system. This testing was completed in September, 1995 at Sandia Labs. The MLSR was found to operate with the Rochester wireline with bit error rates lower than 10 E -8. The wireline, slip ring, and electro-optic interface boards were then sent to Oyo Geospace in Houston to be integrated onto a wireline truck for field test demonstrations, with BOLT Technologies being the field operations contractor. The fiber optic wireline was operated in a field experiment for the Gas Research Institute in September, 1995. The wireline and fiber optic interface functioned very well in this demonstration, and further field operations are ongoing.

III.3. CRADA Source Fiber Optic System

III.3.a CRADA Source FOTS Specifications

The CRADA Source program requires a two way communication link, with fiber optic receivers and transmitters required on both the up and downhole ends of the wireline. Also, the Manchester coding and decoding functions are included in these circuit boards. The data input format for the system requires a continuous NRZ bitstream and a companion clock. The data output format at the receiver is provided in the same format. All clock and data inputs and outputs are buffered to RS-422 level. The specifications for the CRADA Source FOTS are provided in Tables III.3-6.

Table III.3: CRADA Source General Specifications

Communication Link	Dedicated Fiber Uplink Dedicated Fiber Downlink
Optical Technology	LED with Multimode fibers
Operating Temperature	0° to 175° C
PC Board Dimensions	15" by 3" (one circuit board)
Power Required	15V± .75V @ 30 ma -15V ± .75V @ 30 ma5.0V ± .2V @ 550 ma
Wireline Length	20,000 ft (6.5 km) max
Vibration (Operational)	+/- 10 gs pk (5 to 1000 Hz spectrum)

Table III.4: CRADA Source Optical Specifications

Optical Wavelength	1300 nm
Fiber Type	multimode graded index core size: 50 micron
Optical Transmitter	Litton #TX5006LPower Out: -17 dBm
Optical Receiver	Litton #RX5417Min Power: -39 dBm
Optical Connection (both TX and RX)	1 meter fiber pigtail with ST connector

Table III.5: CRADA Source Electrical Specifications

I/O Format (See Note 1)	Continuous NRZ Data & Synchronous Clock
I/O Signal Transmission(See Note 2)	Differential RS-422(Two signals one clock, one NRZ data)
Transmission Format	Manchester (coding and decoding within FOTS)
Down Link Bit Rate	1 Mbit/sec (NRZ) (+/- 5%)
Up Link Bit Rate	1 Mbit/sec (NRZ) (+/- 5%)
Decoded Clk Specs:	Symmetry: 60/40 %Jitter: 0.1 % (max)
Bit Error Rate	10E-8 (or better, full temp)
Data Delay	Circuit: 1 bit period + 0.13 usecFiber Propagation: 33 usec (6.5 km cable)Total Delay: 34 usec
Twisted Pair Cable	WL Gore # GWN 1121-3 (or similar)

Note 1.Synchronous Clock is Continuous with rising edge at center of NRZ data bits. (NRZ data can come in packets with NRZ data line idling either high or low.)

Note 2.Based on National Semiconductors: DS26C31 and DS26C32 RS422 devices.

Table III.6: CRADA Source FOTS Signal List

Signal Name	Terminal Conn	Cable Conn
RXDat	J1.1	Pair A, wht
RXDat-	J1.2	Pair A, blk
RXDatSh	J1.3	Pair A, shield
RXClk	J1.4	Pair B, wht
RXClk-	J1.5	Pair B, blk
RXClkSh	J1.6	Pair B, shield
Rx_Out	J1.7	cond #1
Rx_Out-	J1.8	cond #2
RxOutSh	J1.9	cond #3
Rx_Alarm	J1.10	cond #4
(Internal Signal)	J1.11	NC
Rst~	J1.12	cond #5
Spare	J2.1	NC
Spare	J2.2	NC
TXDat	J2.3	Pair C, wht
TXDat-	J2.4	Pair C, blk
TXDatSh	J2.5	Pair C, shield
TXClk	J2.6	Pair D, wht
TXClk-	J2.7	Pair D, blk
TXClkSh	J2.8	Pair D, shield
VCC	J2.9	cond #6
+15V	J2.10	cond #7
-15V	J2.11	cond #8
GND	J2.12	cond #9

III.3.b CRADA Source Electronics Design

The development of the electronics for the CRADA Source interface is based on very similar technologies as those discussed in section III.2. The functional block diagram is shown in Figure I.1. Note, that since the CRADA Source requires two way communication, a second uphole to downhole link is implemented for it. Obviously, the operation of the CRADA Source requires two fibers: one for downhole and one for uphole communication. The key design issue unique to the CRADA Source FOTS is the requirement for a Manchester decoder interface to operate downhole. This element of the design is based on an Altera EP-610 programmable logic device. These devices were used heavily in the MLSR receiver design, and are known to function up to 200° C. Further design information on the Manchester decoding algorithm is available in the source code design files for the EP-610 device, which is further defined in Appendix D. The electronics schematics and wiring definition for the CRADA Source FOTS are provided in Appendix C.

III.3.c. CRADA Source FOTS Environmental Testing

The circuit boards for the CRADA Source have been assembled and tested to the temperature and vibration specifications listed in Section III.3. The temperature tests were completed utilizing the test setup described in Section II. Since the CRADA Source FOTS circuit boards and components are attached to a hydraulic vibrator in the operational environment, there was concern about the vibration survivability of the unit. All of the circuit boards delivered for operation on the CRADA Source were tested, fully assembled on shaker tables at Sandia Labs. The vibration environment for these tests were applied in all three axes, and are described in Figures III.1-3.

After testing at Sandia, these FOTS circuit boards were installed and tested in the CRADA Source electronics module being assembled and tested at E-Systems in Salt Lake City.

IV. References:

G. E. Sleefe, B. P. Engler, P. M. Drozda, R. J. Franco, J. R. Morgan, Development of the Multi-Level Seismic Receiver (MLSR), SAND94-2162.

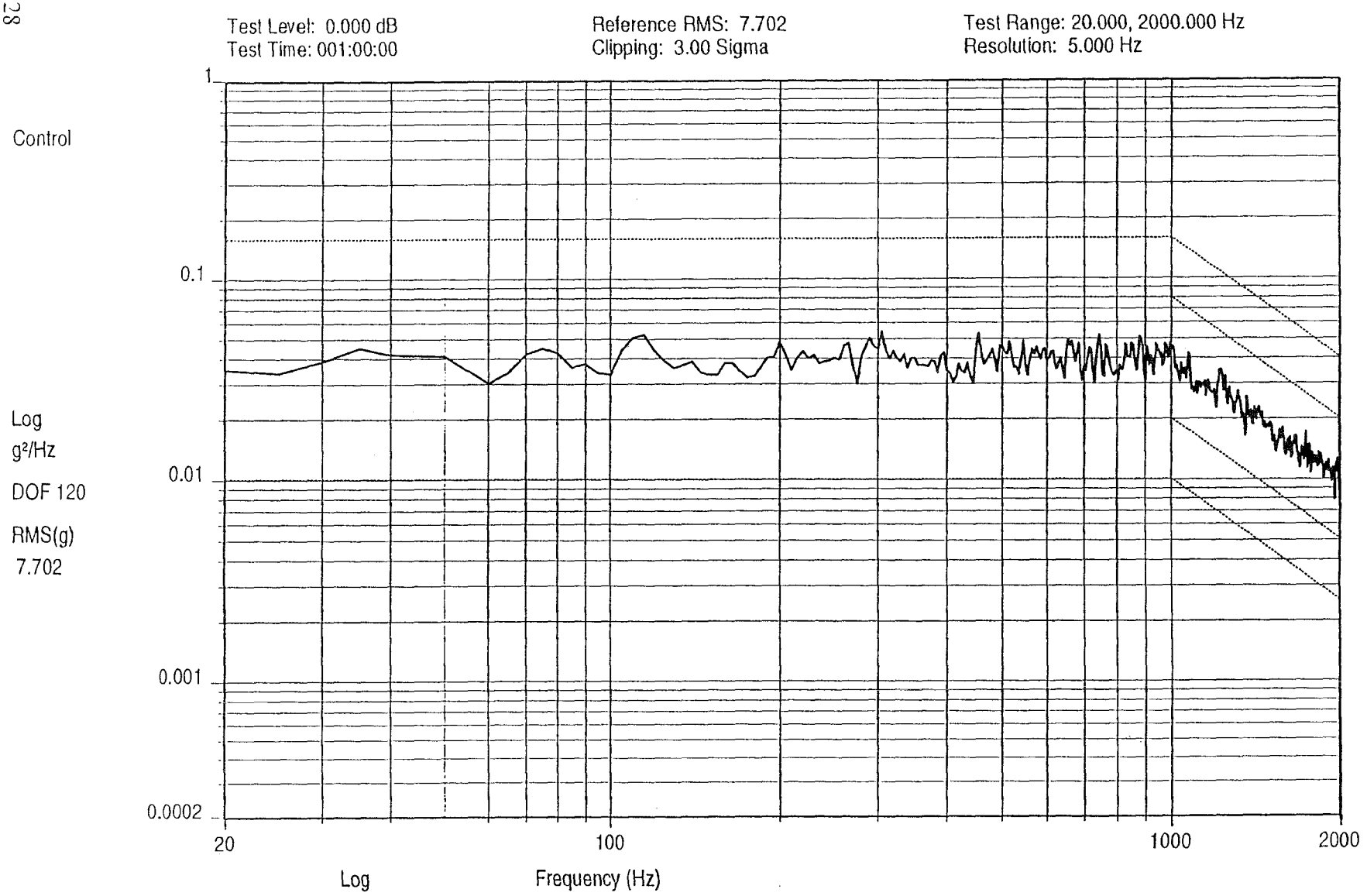

11:37:27
24-Jul-1995

PC BOARD (FO SOURCE)
X-AXIS S/N A01

Test Name: PC_BOARD.tmp

Figure III.1: FOTS Vibration Environment

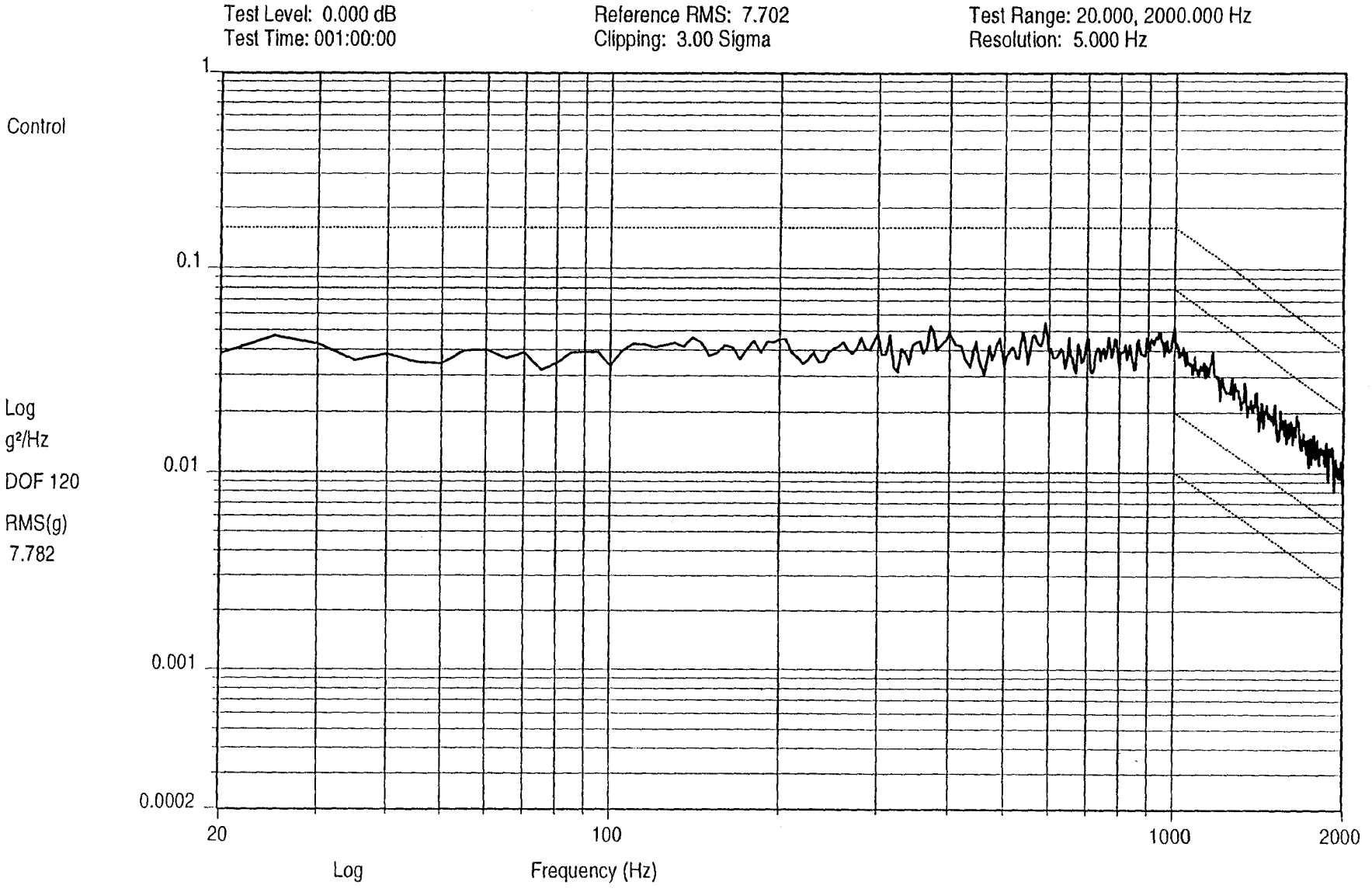

12:53:37
24-Jul-1995

PC BOARD (FO SOURCE)
Y-AXIS S/N A01

Test Name: PC_BOARD.tmp

Figure III.2: FOTS Vibration Environment

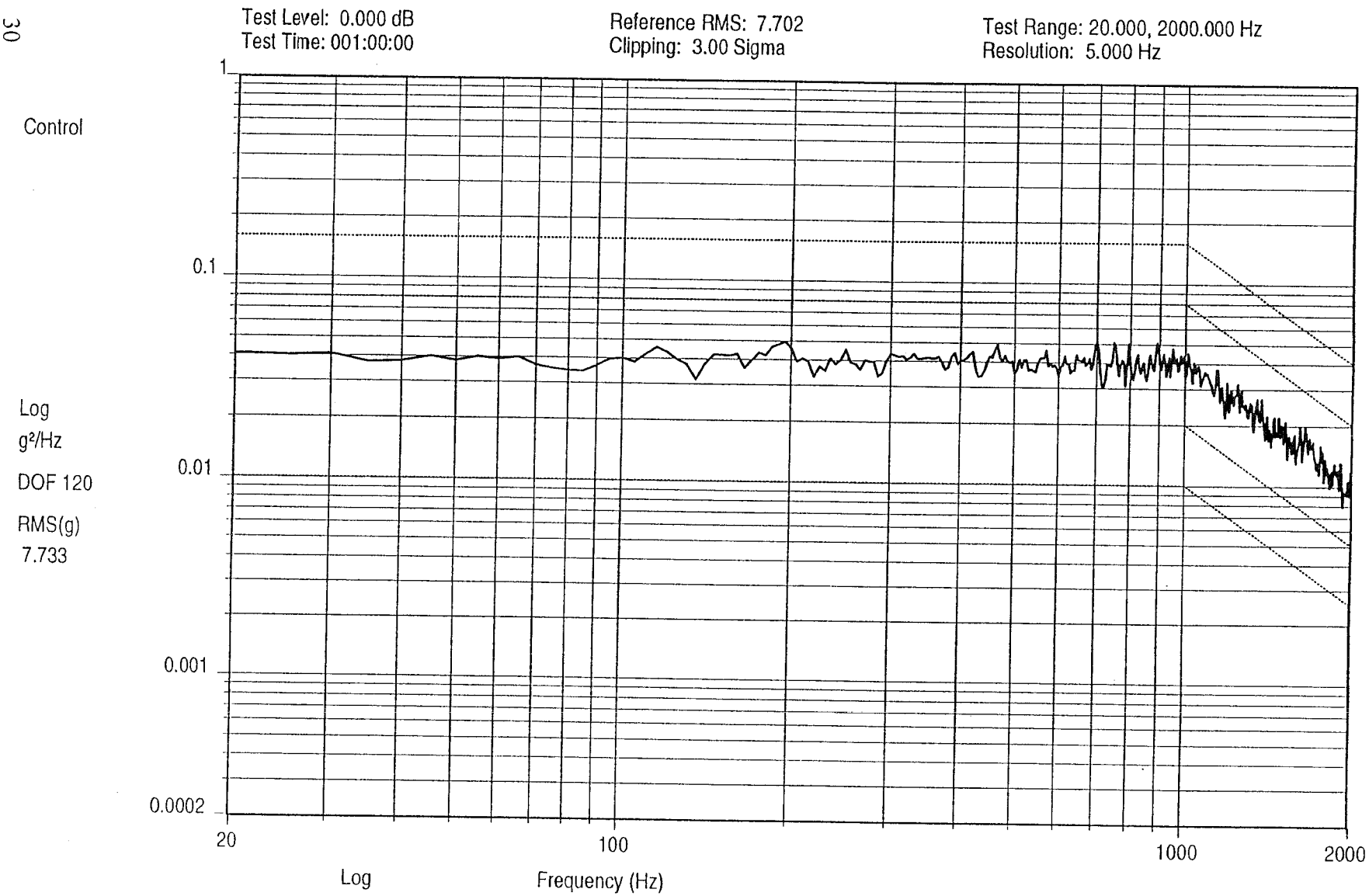

14:17:53
24-Jul-1995

PC BOARD (FO SOURCE)
Z-AXIS S/N A01

Test Name: PC_BOARD.tmp

Figure III.3: FOTS Vibration Environment

Appendices

Appendix A. Fiber Optics Components Contact List

Table A.1: Contact List for FOTS Suppliers and Contractors

Company Name	Contact Name	Address	Telephone
The Rochester Corporation	J. M. Cobb	751 Old Brandy Rd. Culpepper, VA 22701	(703)825-2111
Oyo Geospace	Arnold Pater	9777 W. Gulf Bank Rd.Suite 10 Houston, TX 77040	(713)849-2595
Bolt Technologies	Larry Walter	11220 Timber Tech. Tomball, TX 77375	(713)784-8200
Litton Poly ScientificFiber Optic Products	Mike Wright	1213 N. Main Blacksburg, VA 24060	(703)953-4751
Laser Diode Inc.		4 Olsen Ave. Edison, NJ 08820	(908)549-9001
Focal Technologies Inc.		40 Thornhill Drive, Unit 7Dartmouth, Nova ScotiaCanada B3B 1S1	(902)468-2263

Appendix B. MLSR FOTS Electronics Schematics

Figures B.1 through B.3 are the electronics schematics for the FOTS for the MLSR.

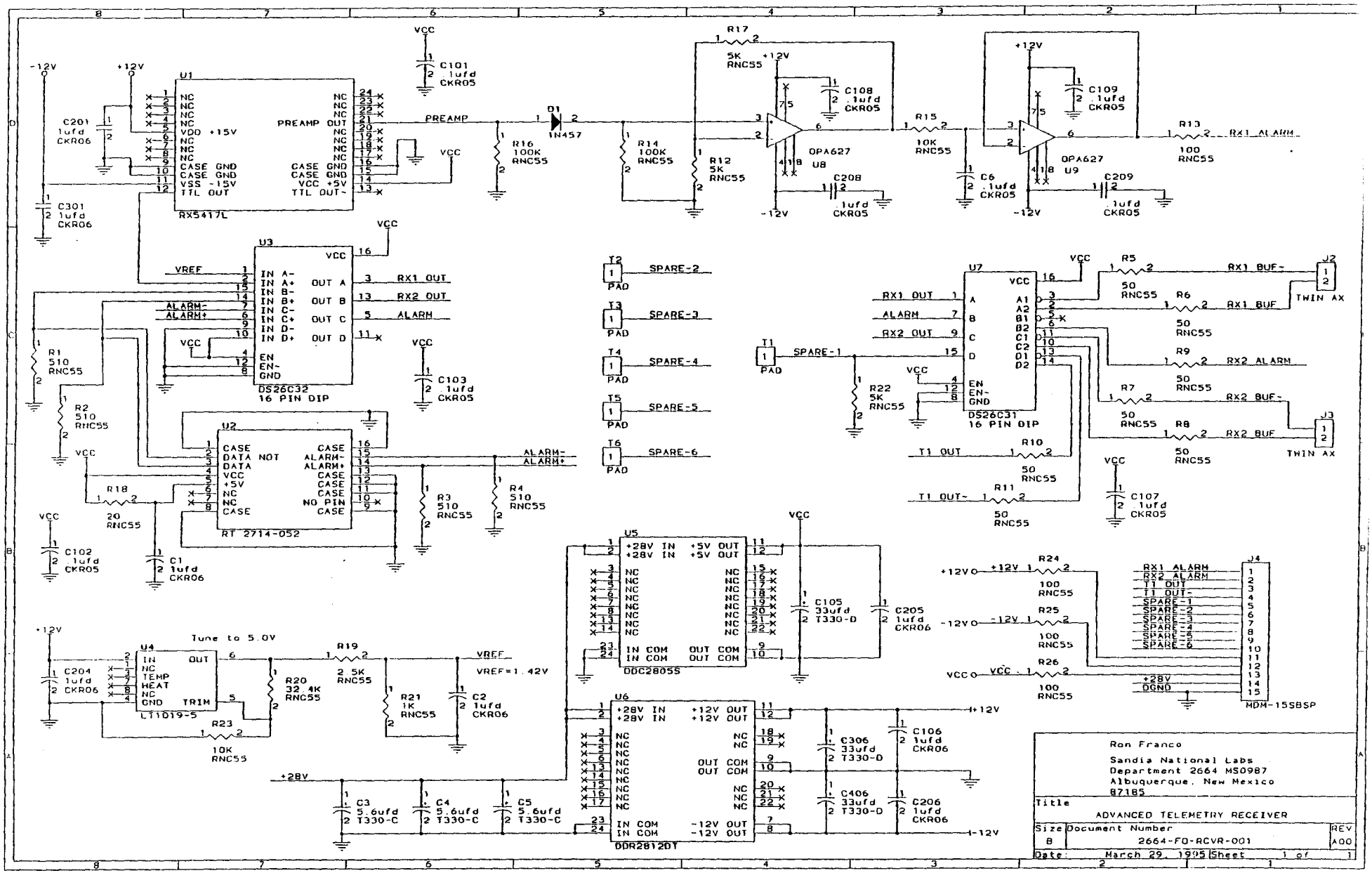

Figure B.1: MLSR Fiber
Optics Electronics Schematic

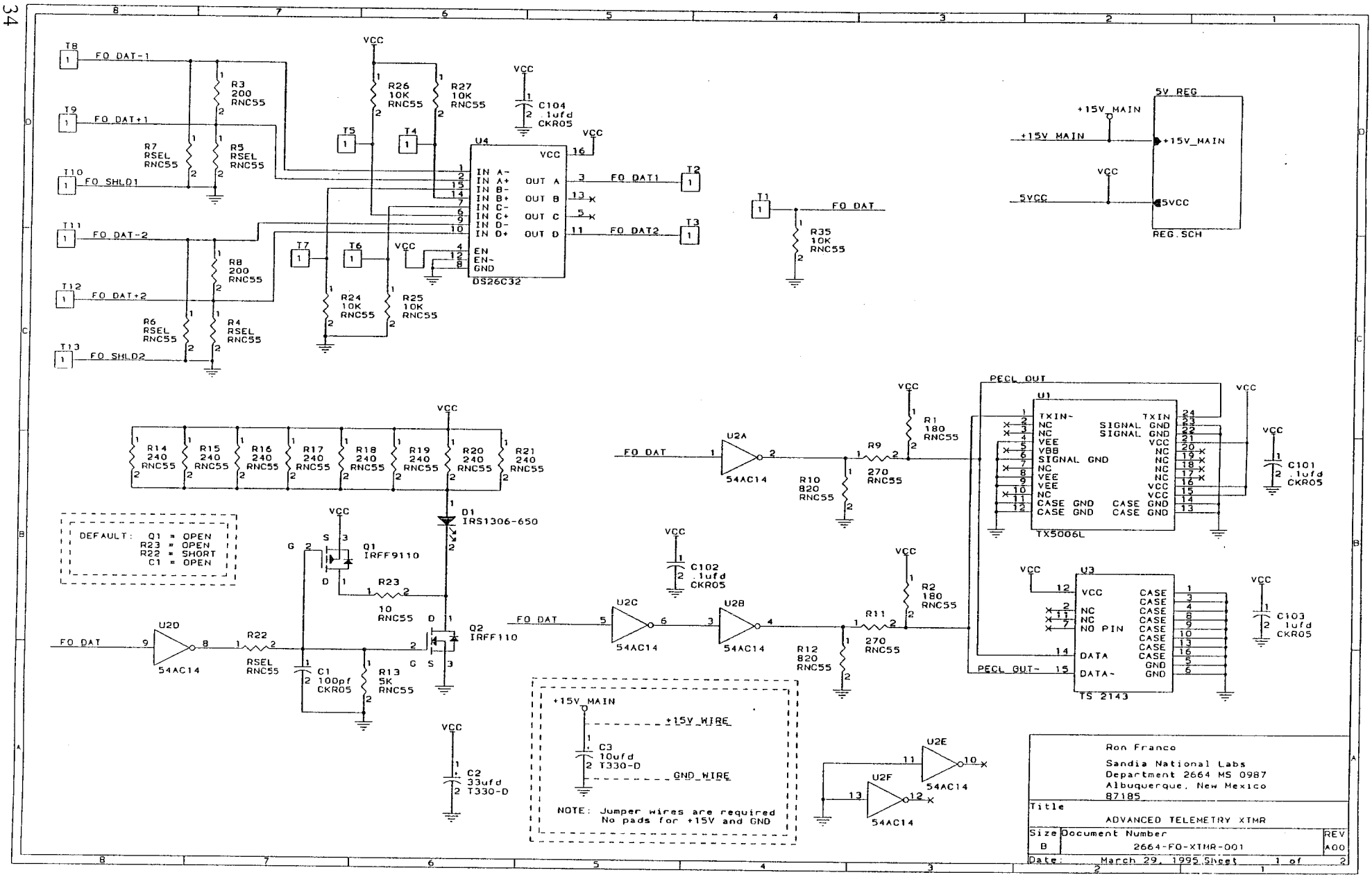

Figure B.2: MLSR Fiber
Optics Electronics Schematic

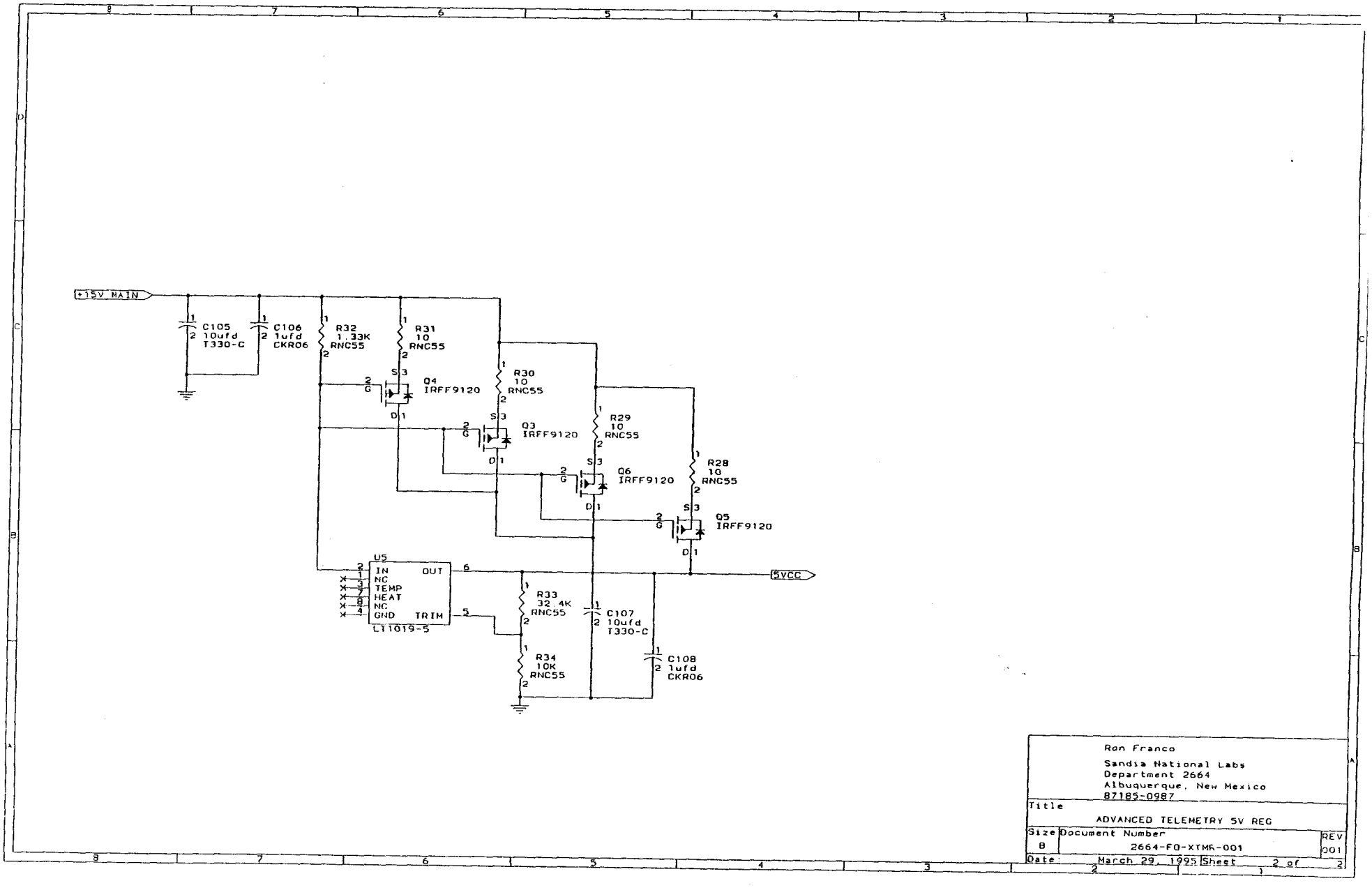

Figure B.3: MLSR Fiber
Optics Electronics Schematic

Appendix C. CRADA Source FOTS Electronics Schematics

The following pages include the electronics schematics, wiring diagram, and PC board outline drawings for the FOTS used in the CRADA Source. Figure C.1 is the wiring diagram used to wire the FOTS circuit board to the Pelton downhole vibrator circuit board. Figure C.2 is the PC board outline drawing for the FOTS circuit board. Figures C.3 and C.4 are the electronics schematics for the FOTS used in the CRADA Source.

Figure C.1: Pelton/Sandia Interconnection Diagram for CRADA Source

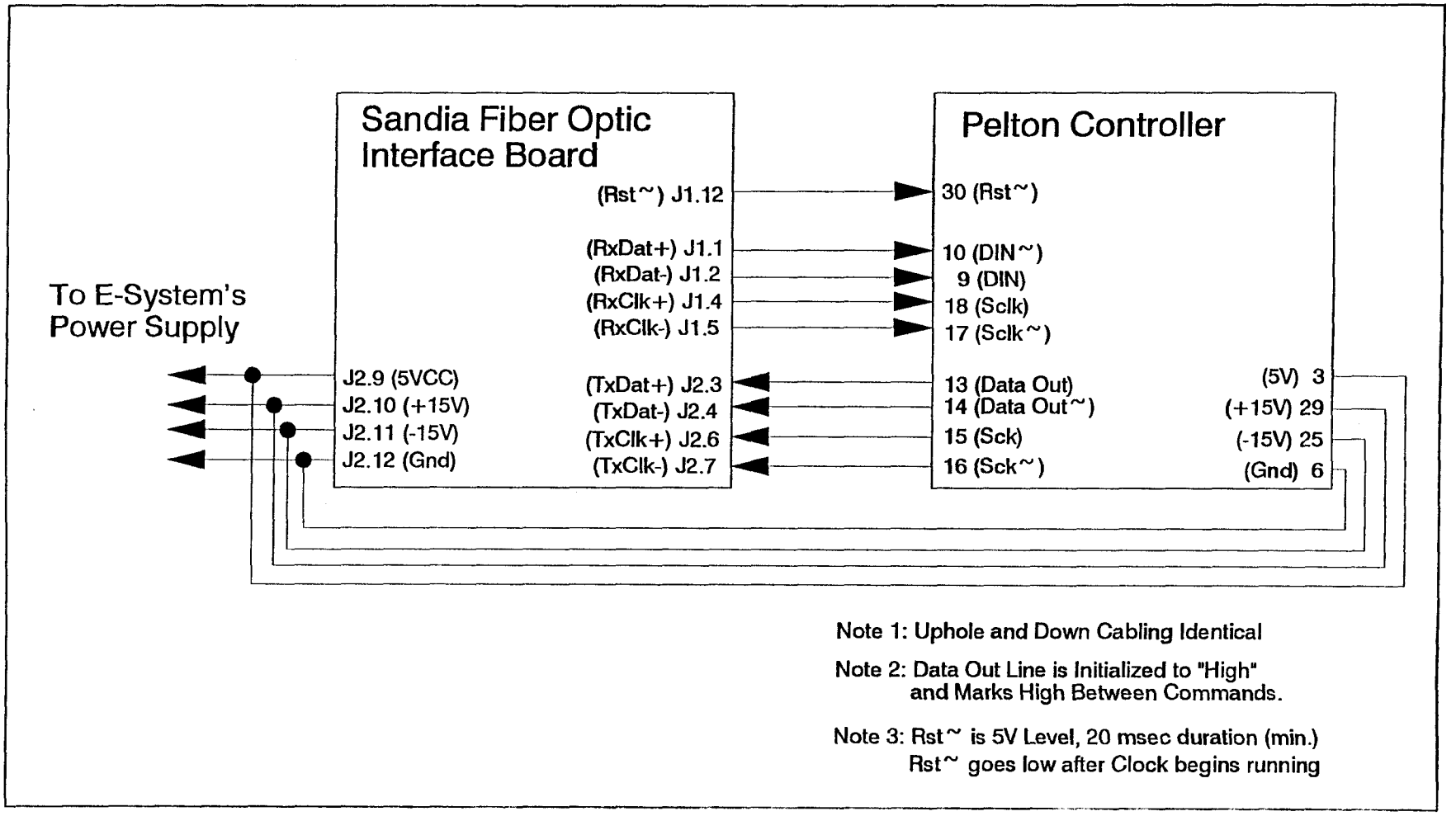

Note 1: Uphole and Down Cabling Identical

Note 2: Data Out Line is Initialized to "High" and Marks High Between Commands.

Note 3: Rst~ is 5V Level, 20 msec duration (min.) Rst~ goes low after Clock begins running

Figure C.2: CRADA Source PC Board Dimensions

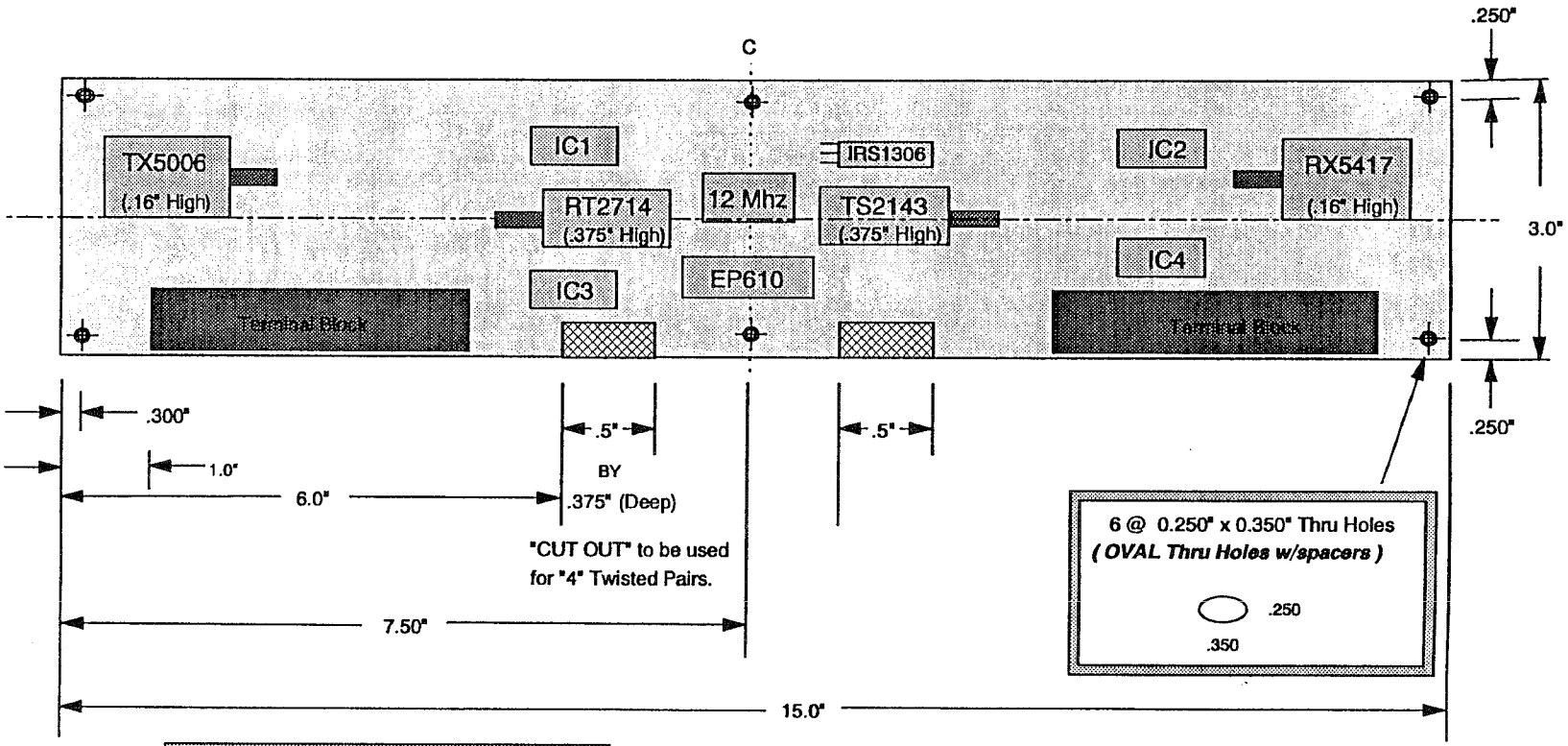

Note: Board Thicknes .09"
Note: 4 Layers
Note: Sides A & D Interconnects.
Note: Layer C=Vcc Plane.
Note: Layer B=Ground Plane.

Note: All IC's in Sockets
Note: No Sockets for Discretes.

JRM 2664 9-21-94

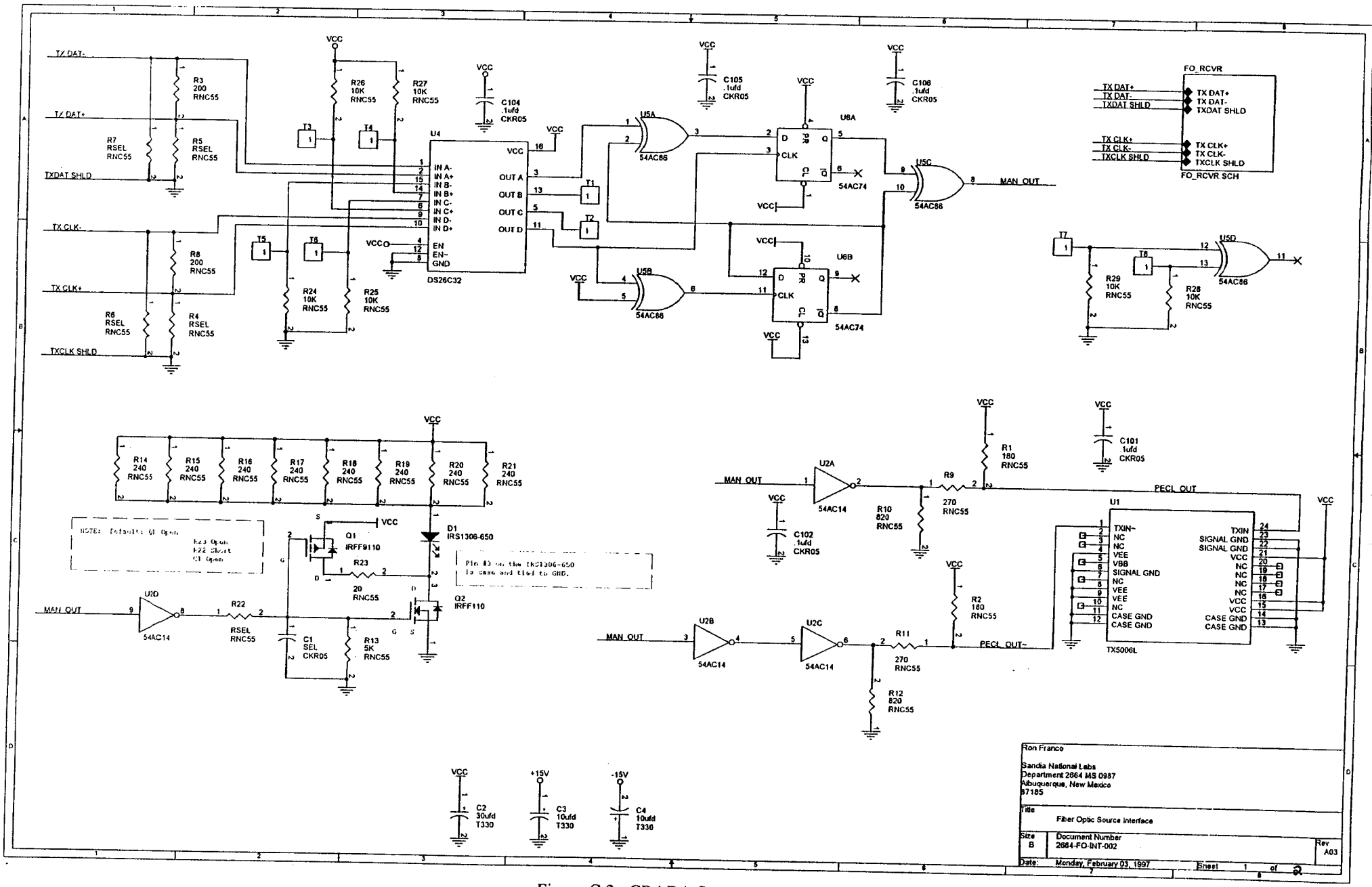

Figure C.3: CRADA Source
Fiber Optics Schematics

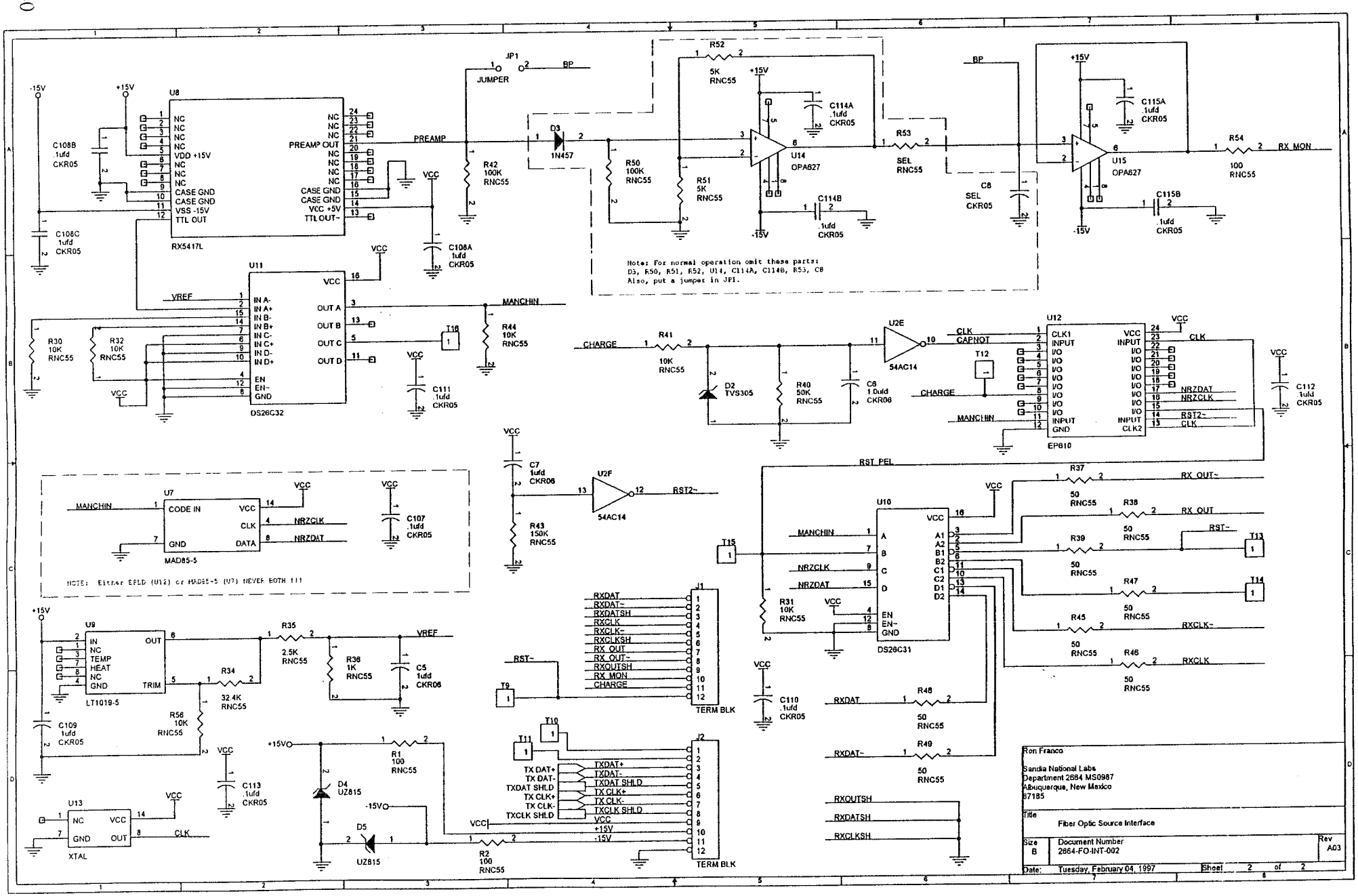

Figure C.4: CRADA Source
Fiber Optics Schematics

Appendix D. CRADA Source FOTS Altera Programming Files

The Manchester decoder function used on the CRADA Source FOTS is implemented in an Altera EP-610. The design file which defines the decoding algorithm follows as Figure D. Note, the MDRSTFIN.SMF file is the source file used to compile the design. The MDRSTFIN.JED file is the JEDEC standard file, which can be used to program the devices for use in the PC boards.

Filename: MDRSTFIN.SMF Filedate: 2/8/96 (Altera APLUS Compiler: SMF Rev 1.2)	Altera Design File
Filename: MDRSTFIN.JED Filedate: 2/8/96	JEDEC Programming file

```
R. J. Franco
Sandia National Labs
2-8-96
A
EP610
BHSource Manch Decoder,File: mdrstfin.smf (mdfin50 with Rst Output Added)
OPTIONS: SECURITY=OFF, TURBO=OFF
PART: EP610
%
        Input Definitions
%
INPUTS:  Clk@1, CapNot@2, Rst2N@14, ManchIn@11, ClkIn@23

%
        Output Definitions
%
OUTPUTS: PC0@3, PC1@4, PC2@5, PC3@6, Mode@7, Charge@8
         SetCo@9, ClrCo@10, RstOut@15, ManchInR@19,
         ComClk@18, NRZClk@16, NRZDat@17, Stat6@20, ClkB@21, Code@22

NETWORK:

   RstOut,RstOut  = COIF(RstOutc,VCC)
   Code,Code = RORF(VCC,SetCo,ClrCo,GND,VCC)
   SetCo,SetCo = RORF(SetCoD,ClkB,Rst,GND,VCC)
   ClrCo,ClrCo = RORF(ClrCoD,ClkB,Rst,GND,VCC)
   ManchInR,ManchInR  = RORF(ManchIn,ClkB,Rst,GND,VCC)
   Charge,Charge = RORF(VCC,ClrCo,Rst,GND,VCC)
   ClkB,ClkB  = COIF(ClkIn,VCC)
   ComClk,ComClk  = COIF(ComClkc,VCC)
   NRZClk,NRZClk  = RORF(VCC,ComClk,Stat6,GND,VCC)
   Stat6,Stat6  = RORF(Stat6D,ClkB,Rst,GND,VCC)
   NRZDat,NRZDat  = RORF(Code,NRZClk,Rst,GND,VCC)

EQUATIONS:

   ClrCoD  = /Mode*PC3*PC2*/PC1*/PC0;
   SetCoD  = Mode*PC3*PC2*/PC1*/PC0;
   Stat6D  = /Code*Mode*/PC3*PC2*PC1*/PC0 + Code*/Mode*/PC3*PC2*PC1*/PC0;
   ComClkc = /Code*ManchIn + Code*/ManchIn;
   RstOutc = CapNot*Charge;
   Rst     = /Rst2N;

MACHINE:   BSrcDec

   CLOCK: Clk
   CLEAR: Rst

   STATES: [ Mode  PC3  PC2  PC1  PC0  ]

   Reset0  [  0     0    0    0    0    ]

   Zero1   [  0     0    0    0    1    ]
   Zero2   [  0     0    0    1    0    ]
   Zero3   [  0     0    0    1    1    ]
   Zero4   [  0     0    1    0    0    ]
   Zero5   [  0     0    1    0    1    ]
   Zero6   [  0     0    1    1    0    ]
   Zero7   [  0     0    1    1    1    ]
   Zero8   [  0     1    0    0    0    ]
   Zero9   [  0     1    0    0    1    ]
   Zero10  [  0     1    0    1    0    ]
   Zero11  [  0     1    0    1    1    ]
   Zero12  [  0     1    1    0    0    ]


   One1   [  1     0    0    0    1    ]
   One2   [  1     0    0    1    0    ]
   One3   [  1     0    0    1    1    ]
   One4   [  1     0    1    0    0    ]
   One5   [  1     0    1    0    1    ]
```

Figure D.1.a: Altera EP-610 Design File

```
One6   [ 1   0   1   1   0   ]
One7   [ 1   0   1   1   1   ]
One8   [ 1   1   0   0   0   ]
One9   [ 1   1   0   0   1   ]
One10  [ 1   1   0   1   0   ]
One11  [ 1   1   0   1   1   ]
One12  [ 1   1   1   0   0   ]

Reset0:
        IF ManchInR THEN One1
        Zero1

Zero1:
        IF ManchInR THEN One1
        Zero2
Zero2:
        IF ManchInR THEN One1
        Zero3
Zero3:
        IF ManchInR THEN One1
        Zero4
Zero4:
        IF ManchInR THEN One1
        Zero5
Zero5:
        IF ManchInR THEN One1
        Zero6
Zero6:
        IF ManchInR THEN One1
        Zero7
Zero7:
        IF ManchInR THEN One1
        Zero8
Zero8:
        IF ManchInR THEN One1
        Zero9
Zero9:
        IF ManchInR THEN One1
        Zero10
Zero10:
        IF ManchInR THEN One1
        Zero11
Zero11:
        IF ManchInR THEN One1
        Zero12
Zero12:
        IF ManchInR THEN One1
        Zero12

One1:
        IF /ManchInR THEN Zero1
        One2
One2:
        IF /ManchInR THEN Zero1
        One3
One3:
        IF /ManchInR THEN Zero1
        One4
One4:
        IF /ManchInR THEN Zero1
        One5
One5:
        IF /ManchInR THEN Zero1
        One6
One6:
        IF /ManchInR THEN Zero1
        One7
One7:
        IF /ManchInR THEN Zero1
        One8
One8:
```

Figure D.1.b: Altera EP-610
Design File

```
145                 IF /ManchInR THEN Zero1
                    One9
            One9:
                    IF /ManchInR THEN Zero1
                    One10
150         One10:
                    IF /ManchInR THEN Zero1
                    One11
            One11:
                    IF /ManchInR THEN Zero1
155                 One12
            One12:
                    IF /ManchInR THEN Zero1
                    One12

160     END$
```

Figure D.1.c: Altera EP-610
Design File

Distribution:

Tad Bostick
Western Atlas International
P.O. Box 1407
Houston, TX 77042

Jack Caldwell
Geco-Prakla
2500, 801 - 6th Avenue S.W.
Calgary, Alberta, CANADA T2P 3W2

Mark Casady
Vastar Resources
15375 Memorial Drive
Houston, TX 77079

Sen Chen
Exxon Production Research Co.
P. O. Box 2189
Houston, TX 77479

Dale Cox
Conoco, Inc.
P. O. Box 1267
Ponca City, OK 74602-1267

Steve Crary
Schlumberger
300 Schlumberger Drive
Sugarland, TX 77478

Alex B. Crawley
U. S. Department of Energy
P. O. Box 1398
Bartlesville, OK 74005

Paul Cunningham
Mobil Exploration & Producing Tech Center
P. O. Box 650232
Dallas, TX 75265-0232

Dave DeMartini
Shell Development Corporation
P. O. Box 481
Houston, TX 77001-0481

Tim Fasnacht
Gas Research Institute
8600 West Bryn Mawr Avenue
Chicago, IL 60631

Robert S. Fleming, Jr.
Oryx Energy Company
P. O. Box 2880
Dallas, TX 75221-2880

Hugh D. Guthrie
Senior Technical Advisor
Federal Energy Technology Center
P. O. Box 880, MSB06
Morgantown, WV 26507-0880

Bob A. Hardage
Bureau of Economic Geology
University Station, Box X
Austin, TX 78713-8924

Jerry M. Harris
Stanford University
Department of Geophysics
Mitchell Building, MS-2215
Stanford, CA 94305-2215

Robert Heming
Manager, Strategic Research
Chevron Petroleum Technology Corp.
2811 Hayes Road
Houston, TX 77082

Donald L. Howlett
Texaco Inc.
3901 Briarpark
Houston, TX 77042

John Hufford
Phillips Petroleum Company
1110 Plaza Office Building
Bartlesville, OK 74004

Charles A. Komar
Product Manager - Natural Gas
Upstream E&P
Federal Energy Technology Center
P.O. Box 880
Morgantown, WV 26507-0880

Robert T. Langan
Staff Geophysicist
Chevron Petroleum Technology Company
P.O. Box 446
La Habra, CA 90633-0446

William F. Lawson
Fuel Resources Division
Federal Energy Technology Center
P.O. Box 880
Morgantown, WV 26507-0880

Robert E. Lemmon
U. S. Department of Energy
Bartlesville Project Office
P. O. Box 1398
Bartlesville, OK 74005

Bailey Lindsey
Geospace Corporation
7334 N. Gessner Road
Houston, TX 77040

Craig Lippus
Geometrics Inc.
P. O. Box 497
Sunnyvale, CA 94089

Kenneth D. Mahrer
Integrated Petroleum Technologies, Inc.
1536 Cole Boulevard, Suite 320
Golden, CO 80401

Wulf Massell
E & P Imaging Corp. (EPIC)
1221 Lamar, Suite 605
Houston, TX 77010-3037

Mark Mathisen
Mobil Research & Development Co.
P. O. Box 819047
Dallas, TX 75381-9047

Larry Matthews
Canadian Hunter
Suite 2000, 605 5th Avenue, SW
Calgary, Alberta, CANADA T2P 3H5

Frank McCaffery
Chevron Petroleum Technology Co.
P. O. Box 446
La Habra, CA 90633-0446

Danny R. Melton
Texaco Group, Inc.
P. O. Box 770070
Houston, TX 77215-0070

John Minear
Halliburton Logging Services, Inc.
P. O. Box 42800
Houston, TX 77242

Keith R. Morley
CGG American Services, Inc.
2500 Wilcrest, Suite 200
Houston, TX 77042

Bjorn N. P. Paulsson
President
Paulsson Geophysical Services, Inc.
1300 Beach Blvd.
La Habra, CA 90633-0446

Wayne D. Pennington
Michigan Technological University
Dept. of Geological Engineering
1400 Townsend Drive
Houghton, MI 49931-1295

Steve Peterson
Marathon Oil Company
P. O. Box 3128
Houston, TX 77253-3128

William E. Preeg
Vice President
Schlumberger
8311 North RR 620
Austin, TX 78726

Maynard Redeker
Oryx Energy Company
P. O. Box 830936
Richardson, TX 75083-0936

John B. Sinton
Conoco, Inc.
P. O. Box 1267
Ponca City, OK 74602-1267

Bill Spurgeon
Kerr-McGee Corporation
Technology Center
P. O. Box 25861
Oklahoma City, OK 73125

George Stosur
U. S. Department of Energy
FE-33, FORS
Washington, DC 20545

Manik Talwani
Houston Advanced Research Center
4800 Research Forest Drive
The Woodlands, TX 77381

Henry Tan
Amoco Production Company
P. O. Box 3385
Tulsa, OK 74102

Roger Turpening
Massachusetts Institute of Technology
Earth Resources Laboratory
42 Carleton Street
Cambridge, MA 02142

Walter R. Turpening
Reservoir Imaging, Inc.
13003 Murphy Road, Suite D-1
Stafford, TX 77477

Sandra L. Waisley
U. S. Department of Energy
FE-32 FORS
Washington, DC 20585

Skip Walden
Unocal Corporation
14141 Southwest Freeway
Sugar Land, TX 77478

John Walsh
Schlumberger Well Services
1325 S. Dairy Ashford, Suite 350
Houston, TX 77077

Larry A. Walter
Bolt Technology Corporation
3024 Rogerdale Road
Houston, TX 77042

Ron Ward
Louisiana Land & Exploration Co.
P. O. Box 60350
New Orleans, LA 70160

Thomas C. Wesson
Director
U. S. Department of Energy
P. O. Box 1398
Bartlesville, OK 74005

Graham A. Winbow
Exxon Production Research Co.
P. O. Box 2189
Houston, TX 77252-2189

Robert Withers
ARCO Expl. & Prod. Technology
2300 W. Plano Parkway
Plano, TX 75075

E. J. Witterholt
BP Exploration
P. O. Box 4587
Houston, TX 77210-4587

Dan Woo
Mark Products
10502 Fallstone Road
Houston, TX 77099

Allen N. Goland
Brookhaven National Laboratory
Dept. of Applied Science
P. O. Box 5000, Bldg. 815
Upton, NY 11973-5000

Norman E. Goldstein
Lawrence Berkeley Laboratory
Earth Sciences Division, MS 90/1116
1 Cyclotron Road
Berkeley, CA 94720

Bob Hanold
Los Alamos National Laboratory
P. O. Box 1663, MSD446
Los Alamos, NM 87545

Richard E. Rice
Idaho National Engineering Laboratory
P. O. Box 1625 MS-3710
Idaho Falls, ID 83415-3710

Bernard F. Saffell, Jr.
Senior Program Manager
Pacific Northwest National Laboratory
P.O. Box 999, MS-K5-22
Richland, WA 99352

David Schmalzer
Argonne National Laboratory
955 L'Enfant Plaza, SW, Suite 6000
Washington, DC 20024

T. W. "Tom" Schmidt
Oak Ridge National Laboratory
P. O. Box 2008
MS6273, Bldg. 4500 N.
Oak Ridge, TN 37831-6273

Bob Whitsett
Lawrence Livermore National Laboratory
P. O. Box 808, MS L-644
Livermore, CA 94550

Frank L. Bernhard
Raytheon Aircraft
2268 S. 3270 W.
Salt Lake City, UT, 84119

Jack H. Cole
University of Arkansas
Dept. of Mechanical Engr
Mechanical Engineering Bldg.
Fayetteville, AR 72701

John A. Giles
Pelton
1500 N. Waverly
Ponca City, OK 74602

Glenn Kirkendall
Raytheon Aircraft
2268 S. 3270 W.
Salt Lake City, UT, 84119

Frank Kissinger
Teledyne Geotech
P.O. Box 469007
Garland, TX 75046-9007

John A. McDonald
University of Houston
Allied Geophysics Lab
AGL Building
Houston, TX 77204-4231

Bob Smithers
Circuit Concepts
Route 3, Box 45
Alvin, TX 77511

J. M. Cobb
The Rochester Corporation
751 Old Brandy Rd.
Culpepper, VA 22701

Arnold Pater
Oyo Geospace
9777 W. Gulf Bank Rd., Suite 10
Houston, TX 77040

Larry Walker
Bolt Technologies
11220 Timber Tech
Tomball, TX 77375

Sandia Internal:

MS 0655	Preston B. Herrington, 5736
MS 0701	Richard W. Lynch, 6100
MS 0705	Bruce P. Engler, 6116
MS 0705	Gregory J. Elbring, 6116
MS 0705	Marianne C. Walck, 6116
MS 0705	Norman R. Warpinski, 6116
MS 0705	Patrick M. Drozda, 6116
MS 0705	Robert P. Cutler, 6116
MS 0706	David A. Northrop, 6112 (10)
MS 0843	Gerard E. Sleefe, 9136
MS 0979	Larry S. Walker, 5704
MS 0985	John H. Stichman, 2600
MS 0987	David E. Ryerson, 2664
MS 0987	Jeffrey R. Morgan, 2664
MS 0987	Ronald J. Franco, 2664 (10)
MS 1425	Marion W. Scott, 1307
MS 1425	Michael A. Butler, 1315
MS 9018	Central Tech. Files, 8523-2
MS 0899	Technical Library, 13414 (5)
MS 0619	Technical Publications, 12613
MS 0100	Document Processing for DOE/OSTI, 7613-2 (2)