C.3

SANDIA REPORT

SAND96–2312 • UC–706
Unlimited Release
Printed September 1996

Current Limiters

Douglas H. Loescher, Ken Noren

Prepared by
Sandia National Laboratories
Albuquerque, New Mexico 87185 and Livermore, California 94550
for the United States Department of Energy
under Contract DE-AC04-94AL85000

Approved for public release; distribution is unlimited.

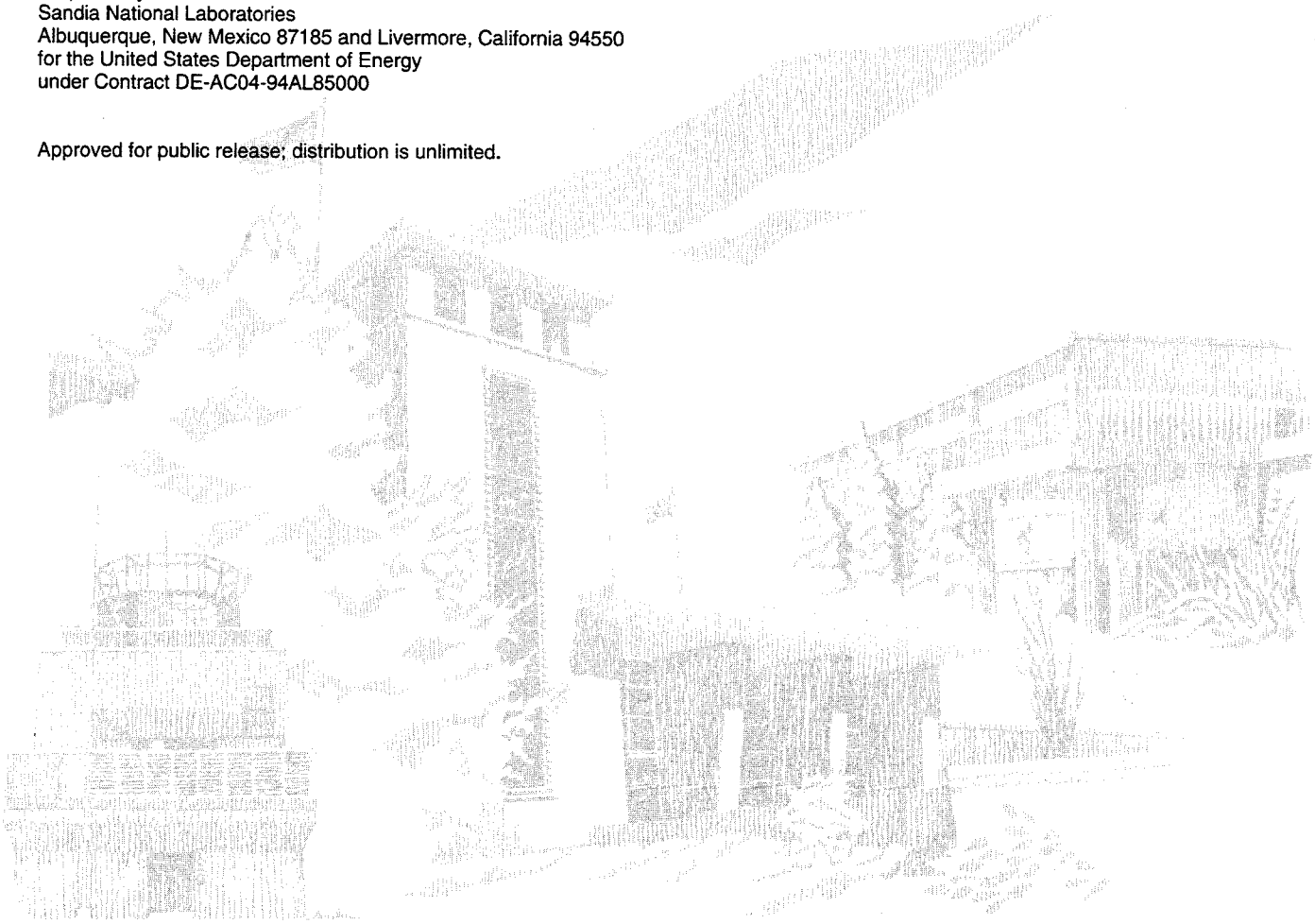

SF2900Q(8-81)

Issued by Sandia National Laboratories, operated for the United States Department of Energy by Sandia Corporation.

NOTICE: This report was prepared as an account of work sponsored by an agency of the United States Government. Neither the United States Government nor any agency thereof, nor any of their employees, nor any of their contractors, subcontractors, or their employees, makes any warranty, express or implied, or assumes any legal liability or responsibility for the accuracy, completeness, or usefulness of any information, apparatus, product, or process disclosed, or represents that its use would not infringe privately owned rights. Reference herein to any specific commercial product, process, or service by trade name, trademark, manufacturer, or otherwise, does not necessarily constitute or imply its endorsement, recommendation, or favoring by the United States Government, any agency thereof or any of their contractors or subcontractors. The views and opinions expressed herein do not necessarily state or reflect those of the United States Government, any agency thereof or any of their contractors.

Printed in the United States of America. This report has been reproduced directly from the best available copy.

Available to DOE and DOE contractors from
Office of Scientific and Technical Information
PO Box 62
Oak Ridge, TN 37831

Prices available from (615) 576-8401, FTS 626-8401

Available to the public from
National Technical Information Service
US Department of Commerce
5285 Port Royal Rd
Springfield, VA 22161

NTIS price codes
Printed copy: A05
Microfiche copy: A01

SAND96-2312
Unlimited Release
Printed September 1996

Distribution
Category UC–706

Current Limiters

Douglas H. Loescher
Systems Surety Assessment Department
Sandia National Laboratories
Albuquerque, New Mexico 87185

Ken Noren
Assistant Professor, Department of Electrical Engineering
University of Idaho
Moscow, Idaho 83844

Abstract

The current that flows between the electrical test equipment and the nuclear explosive must be limited to safe levels during electrical tests conducted on nuclear explosives at the DOE Pantex facility. The safest way to limit the current is to use batteries that can provide only acceptably low current into a short circuit; unfortunately this is not always possible. When it is not possible, current limiters, along with other design features, are used to limit the current. Three types of current limiters, the fuse blower, the resistor limiter, and the MOSFET-pass-transistor limiter, are used extensively in Pantex test equipment. Detailed failure mode and effects analyses were conducted on these limiters. Two other types of limiters were also analyzed. It was found that there is no best type of limiter that should be used in all applications. The fuse blower has advantages when many circuits must be monitored, a low insertion voltage drop is important, and size and weight must be kept low. However, this limiter has many failure modes that can lead to the loss of over current protection. The resistor limiter is simple and inexpensive, but is normally usable only on circuits for which the nominal current is less than a few tens of milliamperes. The MOSFET limiter can be used on high current circuits, but it has a number of single point failure modes than can lead to loss of protective action. Because bad component placement or poor wire routing can defeat any limiter, placement and routing must be designed carefully and documented thoroughly.

Contents

Executive Summary 9

1 Introduction 11

2 Over Current Protection 11

3 The Selection of Current Limiters 14

4 Fuses and Fuse Blower Circuits 15

4.1 Fuses and Circuit Breakers 15
4.2 Detailed Analysis of the Fuse Blower used in the UA5088 17

5 Resistor Current Limiters 32

6 Current Limiters with Diodes, Transistors, and SCRs 34

6.1 Evaluation of the Type A Limiter 34
6.2 Analysis of the Type-B Limiter 47
6.3 Type C Limiter 53
6.4 Type D Limiter 53

7 Discussion 61

8 Conclusions 63

Appendix A – Current Limiting Resistors 65

Appendix B – Design Equations For The Type B Limiter 81

Illustrations

1 Temperature as a function of time and current for a 20-gauge Teflon-insulated conductor surrounded by a bundle of 80 similar conductors that were not carrying current 12
2 The block diagram of a tester shows the use of robust barriers to separate power sources, functional circuits, and output protection circuits 14
3 The properties of an ideal current limiter 15
4 A cartoon representation of the fuse blower circuit 16
5 Stage 1 of the UA5088 fuse blower circuit 17
6 Stage 2 of the UA5088 fuse blower circuit 18
7 Stage 3 of the UA5088 fuse blower circuit 20
8 A simple resistive current limiter 32
9 A schematic of the Type A, series MOSFET limiter 35
10 The circuit of the Type A1 limiter 43
11 The basic Type B regulator 47
12 The circuit for the Type D limiter 54

Tables

1 The relationships between over current, duration, and consequences 13
2 Failure modes and effects for the passive components 21
3 Failure modes and effects of the power supplies 22
4 Failure modes and effects of the transistor 23
5 Failure modes and effects of the SCR 23
6 Failure modes and effects of the op-amps and comparator 24
7 Voltages measured in the experimental fuse blower circuit for various load currents 25
8 The results of operating the Stage 1 circuit at elevated temperatures 25
9 The results of operating the Stage 1 circuit with nominal and above nominal supply voltages for the operational amplifier 26
10 The results of subjecting the operation amplifier in the Stage 1 circuit to higher than normal power supply voltages 27
11 The results of testing a Stage 2 circuit at various temperatures and at supply voltages of +/- 15 V (nominal) and +/- 30 V 28
12 The results of tests of the voltage reference and the comparator at various temperatures and supply voltages 29
13 The maximum voltage that the transistor in the Stage 3 circuit would hold off 30

Tables (Continued)

14 Results obtained when the entire fuse blower was heated in an oven 31
15 Results obtained when only the SCR was heated in an oven 31
16 Type A component values for I_{max} = 1 A 35
17 Type A power dissipation for VIN = 28 V for shorted output 36
18 Source-drain of M1 shorted and load shorted 36
19 Gate-drain of M1 shorted 37
20 Source-gate of M1 shorted 38
21 Emitter-base of Q1 shorted 38
22 Emitter-collector and base-collector of Q1 open 39
23 R3 shorted 40
24 A summary of the effects of component failure on Type A 41
25 Power dissipation for varying input voltages 42
26 Type A1 component values 44
27 Temperature of Type A1 components 45
28 Results from elevated temperature testing of entire Type A1 circuit 45
29 Results from tests in which only the Type-A1 printed circuit board was heated 46
30 Results obtained when only the MOSFETs in the Type A1 limiter were heated 47
31 Type B component values for I_{lim} = 1A 49
32 Type B component power dissipation for shorted output 49
33 Emitter-collector of Q1 shorted 50
34 Base-collector of Q1 shorted 50
35 R1 shorted 51
36 Summary of component failures 52
37 Power dissipation for various input voltages with the load shorted 53
38 Type D limiter component values 55
39 Component power dissipation for shorted output Type D limiter 56
40 Resistor R1 shorted 56
41 Resistor R2 shorted 57
42 Resistor R3 shorted 57
43 Emitter-to-base short of Q1 58
44 Summary of component failures 59
45 Power dissipation for a short circuit load and various input voltages 60

Current Limiters

Executive Summary

Electrical tests are conducted on nuclear explosives at Pantex. The electrical testers used for the tests must be designed so that they create the lowest possible risk of any unintended application of electrical energy. Current flows between the tester and the device under test must be limited to the lowest levels that will assure reliable completion of required tests. Each tester must be designed so that the risk of over current is as low as is reasonably attainable. An essential part of risk management is the selection of the lowest voltage, lowest short circuit current, and lowest total energy power source that will support reliable operation of a tester. A second essential part of risk reduction is the use of robust barriers to separate parts of the tester; this is shown in Figure 2. A third part of risk reduction, and the part that is the principle topic of this report, is the use of current limiters to limit the electrical current that can flow between the tester and the nuclear explosive. The selection of a power source and the use of barriers are critical because no limiter can withstand unlimited voltage or dissipate unlimited energy, and no limiter is effective if it is bypassed.

Three types of current limiters – the fuse blower, the resistor limiter, and the MOSFET-pass-transistor limiter – are used extensively in Pantex test equipment. Detailed failure mode and effects analyses were conducted on these limiters. Two other types of limiters were also analyzed. Circuits were built and tested to confirm and extend the analyses. In particular, a circuit very similar to the fuse blower used in the UA5088 current limiting adapter and a circuit very similar to the MOSFET current limiter used in the QU2454 command disable tester were built and tested. Tests were conducted for nominal supply voltage and room temperature and for various combinations of elevated supply voltage and elevated temperature.

A tester powered by a battery that has low short-circuit current comes closest to being inherently safe. The resistor limiter provides passive safety; that is, the resistor does not have to take any action to limit the current. The other types of limiters are all sense and respond devices. That is, part of the limiter monitors the current, and, if the current exceeds the limit, generates a signal that causes some change in the circuit that limits the current. From a pure safety view point, sense and respond devices are less desirable than those that are inherently safe or are passively safe.

It was found that there is no single best type of limiter that should be used in all applications. The fuse blower has advantages when many circuits must be monitored, a low insertion voltage drop is important, and size and weight must be kept low. This limiter has many failure modes that can lead to the loss of over current protection. However, it was found that the operational amplifiers and the comparator used in the UA5088 will operate properly for periods of at least a few minutes at supply voltages up to 30 V and at temperatures up to about 190 C. This upper temperature is well above the specified maximum use temperature of 125 C for these integrated circuits.

The resistor limiter is simple and inexpensive, but is normally usable only on circuits for which the nominal current is less than a few tens of milliamperes. The MOSFET limiter can be used on high current circuits, but it has a number of single point failure modes than can lead to loss of protective action. Extensive tests were conducted to determine how a version of this limiter, which is similar to a limiter in the QU2454, would respond to elevated supply voltages and elevated temperatures. The circuit operated up to temperatures of about 150 C. When the entire limiter was placed in an oven, the limit current decreased somewhat as the temperature increased. This behavior would provide extra protection in most applications. However, no decrease in limiting current with increasing temperature was observed when only the MOSFETs were heated.

Failure modes and effects analyses were also performed for a limiter that uses a pass transistor and light emitting diode and for a limiter that uses an npn transistor and a silicon controlled rectifier. Because the npn transistor in the latter limiter would not normally be in saturation, there would be relatively large power dissipation in this transistor during normal (none limiting) operation. This could be a significant disadvantage in battery-powered equipment.

Component layout and wire routing are an essential part of the design and construction of limiters and testers. Because bad component placement or poor wire routing can defeat any limiter, placement and routing must receive as much attention as circuit design.

Current Limiters

1. Introduction

Electrical testers are connected to nuclear explosives during assembly, maintenance, and disassembly operations. Permissive action link (PAL) controllers are connected to nuclear weapons to perform coding and locking operations. Both the testers and the PAL controllers contain circuits that limit the current that could flow between the tester or controller and a nuclear device. The correct and reliable operation of the limiter circuitry is crucial to the assurance of nuclear explosive safety. This report discusses, from a nuclear explosive safety viewpoint, the selection, design, and failure modes of current limiters.

The remainder of this report is divided into seven sections. Section 2 provides a discussion of over current protection, Section 3 provides information on the selection of current limiters, Section 4 contains a discussion of the use of fuses and circuit breakers, Section 5 provides a discussion of the use of resistors, Section 6 contains the results of failure mode and effects analyses (FMAE) and laboratory tests of three types of active current limiters, Section 7 presents a discussion of all test and simulation results, and conclusions are given in Section 8.

2. Over Current Protection

The power supplied by a current of I amperes to an electrical load with resistance R ohms is equal to I^2R watts. Because the power is proportional to the current squared, it increases rapidly as the current increases. Unless the power supplied to a circuit can be dissipated as rapidly as it is applied, the temperature of the circuit will increase. An increase in temperature can result in damage to the circuit and possibly to fire. If the current is large and is applied rapidly, the build up of heat can be so rapid that an explosion occurs. Since damage to circuits, fire, and explosion are undesirable, particularly in or near a nuclear weapon, test equipment and PAL controllers must contain circuitry that limits output currents to safe levels.

Consideration of the design of nuclear weapons leads to a number of levels of electric current that could constitute a threat to nuclear safety. The highest level at about one hundred amperes arises from the possibility of firing the main charge detonators. It is true that to reliably fire such detonators, the applied current must have a special waveform. However, if the current is available, it is possible (more precisely, it cannot be shown to be impossible) that an acceptable waveform could result from arcing or from some other mechanism. Therefore, it is necessary to assure that currents of hundreds of amperes never unintentionally reach a nuclear explosive.

The next highest level is set by the melting of the insulation on hookup wire or other circuit components. Teflon insulated size 20 wire is used extensively in weapons. Figure 1 shows data on the temperature rise recorded when currents of 10, 20, and 25 ampere flowed through one 20 gauge wire that was enclosed within a group of 80 similar wires. To obtain the data, a thermocouple was placed at the middle of a 6.5-foot-length (2m) current-carrying wire, and 80 6-inch-long (15 cm) pieces of similar wire were wrapped and taped in place over the thermocouple. The graph shows that the temperature rise was less than 15 C after 30 minutes

(1800 seconds) at 10 A, about 50 C after 30 minutes at 20 A, and about 80 C after 5 minutes at 25 A. The Teflon wire insulation had a melting point above 150 C. The data show that it is important to protect 20 gauge wire from large currents; they also show that such wire will not over heat to the melting point of the insulation if a current as large as 25 A flows for a few seconds. It is reasonable to require that any source that could be connected to size 20 wire in a weapon be limited to less than about 10 amperes.

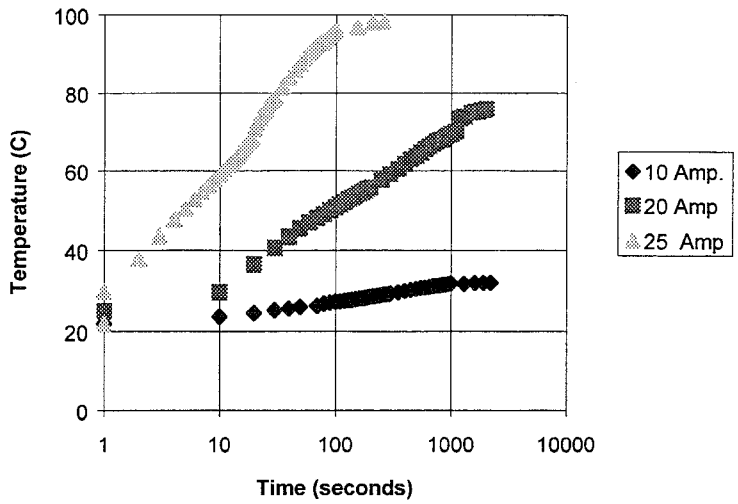

Figure 1. Temperature as a function of time and current for a 20-gauge Teflon-insulated conductor surrounded by a bundle of 80 similar conductors that were not carrying current.

The next lowest level is set by the 5-A all-fire level for squibs and other electro-explosive devices. Another level, at 1 ampere, is set by the minimum current required to operate typical fire sets. Another, slightly lower limit, at 0.5 A arises from the no-fire current for electro-explosive devices (most modern devices have a no-fire current of 1 ampere, but there are still some 0.5-A, no-fire devices in stockpile weapons). Finally, currents of less than 100 milliamperes normally pose little risk to modern nuclear explosives. The various levels are summarized in Table 1.

Current limiting is required by Department of Energy (DOE) orders. In particular, Section VII of *Order 5610.11* requires the establishment of design and fabrication criteria for testers that introduce electrical energy into nuclear explosives. For equipment designed by Sandia Laboratories, these criteria are found in design guides *DG10001* and *DG10275*. Both of these design guides require that electrical equipment that will be connected to the electrical circuitry in nuclear explosives contain circuits to limit output currents and voltages to safe levels.

Table 1. The relationships between current, duration, and consequences

I (Amperes)	Time	Consequences	Level of Concern
>100	≈1 microsecond	Melt or fire main charge detonators	Very high
>20	Seconds to minutes	Damage wiring, start fire	High
>5	Milliseconds	Fire squibs	High
≈1	≈50 milliseconds	Charge fire set	High
>0.1 but <0.5	Milliseconds	Operate low power warhead electronics	Moderate
<0.1	Indefinite	None expected	Low

The possibility of limiting the current through the selection of a low current battery should not be overlooked. Many of the small batteries designed for use in hearing aids and watches have short circuit currents of less than 100 mA. For example, the short circuit current of the Panasonic BR1216 coin-style lithium battery is only about 5 mA. Such a battery could be used to power a simple continuity tester that might be used to confirm the position of a safety switch. Such a tester would be inherently safe; even if the battery were connected directly to a detonator or an electro-explosive device, the current would be too low to initiate any reaction. At the present time, testers that are not inherently safe, but which are made quite safe through the use of current limiting circuits, are used to check the position of safety switches. It seems evident that a tester with a small battery that could supply only a few milliamperes would pose less risk than a tester that contains a large battery and current limiters.

Current limiters should be independent of each other and of the functional circuitry in a tester. The current limiters must be protected against voltages that would cause them to fail. These design imperatives are most easily achieved if a tester is partitioned as shown in Figure 2. As shown in this figure, the power sources are surrounded by a robust barrier that will withstand credible mechanical and thermal stresses. All electrical penetrations through this barrier must be protected by over current and over voltage circuits that disconnect power if the voltage or current exceeds design limits. Over voltage protection can be as simple as the selection of a battery with a voltage that is less than the lowest safe working voltage of *any* component in the functional and protective circuits. It can also be quite complicated if any voltage in the source region is higher than the lowest safe working voltage. If the power supply contains unitized power sources, the designer must account for any high voltages generated inside of such supplies. For example, many unitized supplies that convert 28 V dc to +/- 10 V dc generate 50 or more volts internally. The designer must either show that this higher voltage can not possibly appear on any pin of the supply, show that all functional and safety components could tolerate the maximum voltage, or provide protective circuitry that assures that the high voltage could not appear on any electrical penetration through the barrier.

The functional circuitry in modern testers frequently consists of a combination of analog and digital circuitry. Some of this circuitry is implemented with discreet components, but much of it is commonly implemented with integrated circuits. Most integrated circuits are rectangles of

black plastic that have metal tabs protruding out the sides; that is, they are "black boxes." They are certainly "black boxes," that is, unknowns, when response to abnormal current, voltages and temperatures is considered. These components should never be part of the safety circuitry of a tester. The reasons to use them are often quite compelling. For example, a programmable logic array that is already part of the functional circuitry may seem to be the appropriate place to combine signals from over voltage and over current sense circuits; however, this should not be done because the failure of a functional circuit should never impair the operation of safety circuits. Furthermore, it is nearly impossible to establish the credibility of safety circuitry if signals from it pass through chips and circuits that are part of the functional circuitry.

As shown in Figure 2, there should be over current and possibly over voltage protection circuitry between the functional circuitry and the connections to a weapon. Both DG10001 and DG10275 call for redundant current limiters. Both documents also specify that the current limiters be designed and built so that the failure of one limiter does not lead to a cascade of failures that destroys the other limiter. This most always means that each limiter must be on its own circuit board and within its own enclosure.

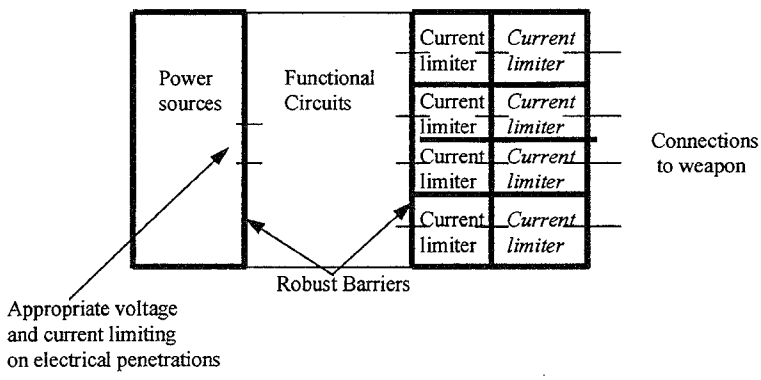

Note

The use of italics indicates that the two current limiters on each connection should be of different design and use different components.

Figure 2. The block diagram of a tester shows the use of robust barriers to separate power sources, functional circuits, and output protection circuits

3. The Selection of Current Limiters

The ideal current limiter shown in Figure 3 assures that the current flowing to or from a circuit never exceeds the selected limit no matter what source of electrical energy is connected to the input terminals and no matter what electrical load is connected to the output terminals. No device or circuit provides perfect current limiting; however, some limiters do a pretty good job.

The description of the load in Figure 3 includes "any internal power source." It would be very difficult to design current limiters to cope with such loads. Fortunately, the nuclear explosives

that are tested at Pantex do not contain active internal power sources. They might contain power sources such as thermal batteries, but the batteries are not active during tests. Also, there are no high voltage batteries in weapons in the enduring stockpile.

One approach to current limiting is to interrupt the circuit between the source and the load if the current significantly exceeds some pre-selected value. For example, in most a.c. power distribution systems, fuses or circuit breakers are used to interrupt circuits if the current becomes too large. The second approach is to limit the current to a pre-selected value, but not to interrupt the circuit. This second approach is used extensively in test equipment.

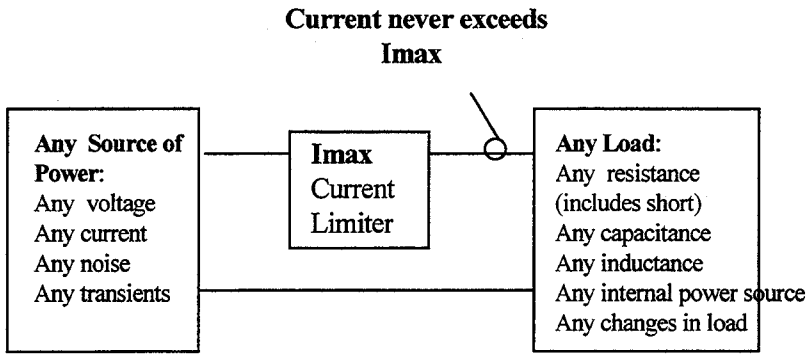

Figure 3. The properties of an ideal current limiter. There is no voltage drop across an ideal limiter.

4. Fuses and Fuse Blower Circuits

Section 4.1 contains a brief discussion of use of fuses for over current protection. Section 4.2 provides a detailed failure modes and effects analysis of the fuse blower circuit. Such circuits are used extensively in permissive action link (PAL) control equipment. The analysis, which concentrates on protection circuits similar to those in the UA5088 current limiting adapter, is applicable to fuse blowers in general. The UA5088 will be used at Pantex to provide additional protection against over currents and over voltages during PAL operations. The reader who is not especially interested in fuse blowers or the UA5088 may want to skip over Section 4.2.

4.1 Fuses and Circuit Breakers

Fuses are used primarily to interrupt current before the heat caused by excessive current can damage wiring and cause fires. The advantages of fuses include low cost, low power dissipation, ruggedness, and simplicity of operation. Disadvantages include an inherent lack of testability, slowness of operation, and the possibility that molten fuse material might re-connect a circuit that has just been opened. There is no nondestructive test to prove that a fuse will open a circuit when it should. However, confidence that a fuse will open when it should can be obtained from tests on

samples drawn from a group of fuses that were manufactured under nearly identical conditions and in a relatively short period of time. A series connection of fuses can be used to increase confidence that a least one fuse will open and interrupt current flow.

Typical specifications (Littlefuse Designers Guide) for fuses used in electronic devices state that a fuse will carry 110 % of rated current for a least four hours and open within 60 minutes if the current is 135 % of the rated value or within 2 minutes if the current is 200 % of the rated value. Fast acting fuses, for example type 3AB, can be expected to respond somewhat faster. For example, according to Littlefuse, a 15 A (ampere) type 3AB fuse can be expected to open in about 10 seconds if the current is 30 A and in about 200 ms if the current is 60 A. The expected opening time is still of the order of 10 milliseconds for currents as large as 150 A.

Suppose a 10-A fuse is used for over current protection on a line for which the nominal current is 3 A. It is common practice to select a fuse with a rating well above the nominal current so that the fuse does not blow during turn-on and turn-off transients. Such a fuse would most likely carry 30 A of current, that is, a current equal to ten times the nominal current, for hundreds of milliseconds before it opened.

Fuse Blowers A special circuit, commonly referred to as a fuse blower, is used for over current protection in many PAL controllers. The block diagram of a typical circuit is shown in Figure 4. The circuit consists of a resistor or other device that senses the current flowing to a circuit in a nuclear explosive; one or more stages of amplification; a comparator; a circuit which, when energized, short circuits the source of power through a fuse; and the fuse which, when it opens, disconnects power from the power source.

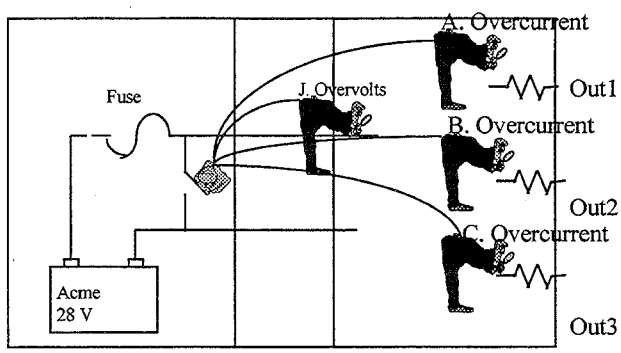

Figure 4. A cartoon representation of the fuse blower circuit. The sense function, which is indicated by the figure holding the magnifying glass, is commonly implemented with a sense resistor and an operational amplifier. The hand, which is on the switch, is frequently implemented with a comparator, a drive circuit, and a SCR.

The fuse blower offers a number of advantages over a fuse. The primary advantage is much faster removal of power in the event of over current, which occurs because the entire short circuit current capability of the power source is applied to open the fuse. For example, the T1576 battery pack used with PAL equipment at Pantex will provide about 80 A of short circuit current to blow a fuse. Additional advantages include the ability to monitor a number of conditions, the fact that

the amplification and comparator functions can be implemented with high quality integrated circuits, and the need for only one high power switching device. A silicon controlled rectifier (SCR) is commonly used as the switching device. Disadvantages include total dependence on the operation of the circuitry that drives the power switch, on the correct operation of this switch, and on correct operation of the fuse. These disadvantages are mitigated to some degree by the fact that an SCR is most likely to fail as a short circuit.

4.2 Detailed Analysis of the Fuse Blower Used in the UA5088

The reliability of the current limiting circuits used in the UA5088 are of particular interest because this device was designed solely to provide additional over current and over voltage protection at Pantex during PAL operations. A failure modes and effects analysis of the circuits, conducted at the University of Idaho by Professor Noren, was a continuation of previous failure modes and effects analyses that Professor Noren conducted for Sandia. Preliminary circuit information was obtained from the Sandia design team and sent to Professor Noren. Because no attempt was made to communicate every design change, the circuits that he analyzed at the University were not identical in all respects to the circuits that were finally incorporated into the UA5088. However, because there is so much similarity between the two sets of circuits, the analyses done by Professor Noren are entirely relevant to the circuits in the UA5088. They are also relevant to fuse blower circuits in general.

The entire fuse blower was divided into three groups of circuits to facilitate the analyses. The first group, Stage 1, performed the sense and initial amplification functions. The second group, Stage 2, provided additional amplification, and the third group, Stage 3, provided control of the SCR and the switching and fusing functions. This division of the complete circuit was convenient, but arbitrary. The sense function and the first stage of amplification were performed by the circuit shown in Figure 5.

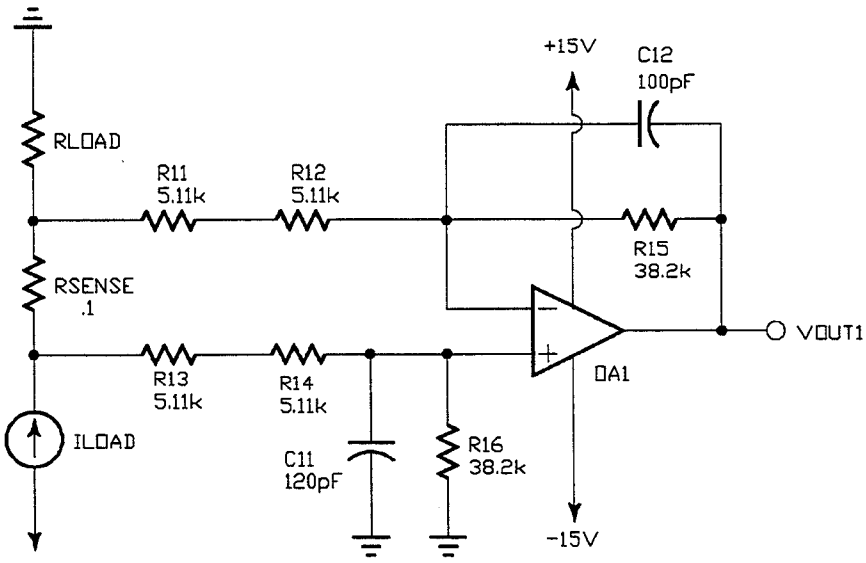

Figure 5. Stage 1 of the UA5088 fuse blower circuit

The voltage across the resistor R_{SENSE} is proportional to the current, I_{LOAD}, flowing from the power supply to the load. The capacitors, C_{11} and C_{12}, are selected to assure circuit stability. If the current flowing through R_{11} and R_{13} is small compared to the current flowing through R_{SENSE}; that is, if the resistance of the series combinations of R_{11} and R_{12}, and of R_{13} and R_{14}, is much larger than the resistance of R_{SENSE} and R_{LOAD}, a situation that exists for all applications of the UA5088, V_{OUT1} can be expressed as

$$\frac{V_{OUT1}}{I_{LOAD}} = \left(\bullet \frac{R_{15}}{R_{11} + R_{12}} + \left(\frac{R_{16}}{R_{13} + R_{14} + R_{16}} \right) \left(1 + \frac{R_{15}}{R_{11} + R_{12}} \right) \right) R_{LOAD} + \left(\frac{R_{16}}{R_{13} + R_{14} + R_{16}} \right) \left(1 + \frac{R_{15}}{R_{11} + R_{12}} \right) R_{SENSE} \tag{1}$$

When the sum of the values of the resistances of R_{11} and R_{12} are equal to the sum of the value of the resistances of R_{13} and R_{14}; and the value of the resistance of R_{15} is equal to value of the resistance of R_{16}, the circuit functions as a differential voltage amplifier. The transfer function simplifies to

$$\frac{V_{OUT1}}{I_{LOAD}} = R_{SENSE} \left(\frac{R_{15}}{R_{11} + R_{12}} \right) \tag{2}$$

For $R_{15} = R_{16} = 38.2\ k\Omega$, $R_{SENSE} = 0.1\ \Omega$, and $R_{11} = R_{12} = R_{13} = R_{14} = 5.11\ k\Omega$, $V_{OUT1}/I_{LOAD} = 0.374$ V/A.

The circuit for the second stage is shown in Figure 6.

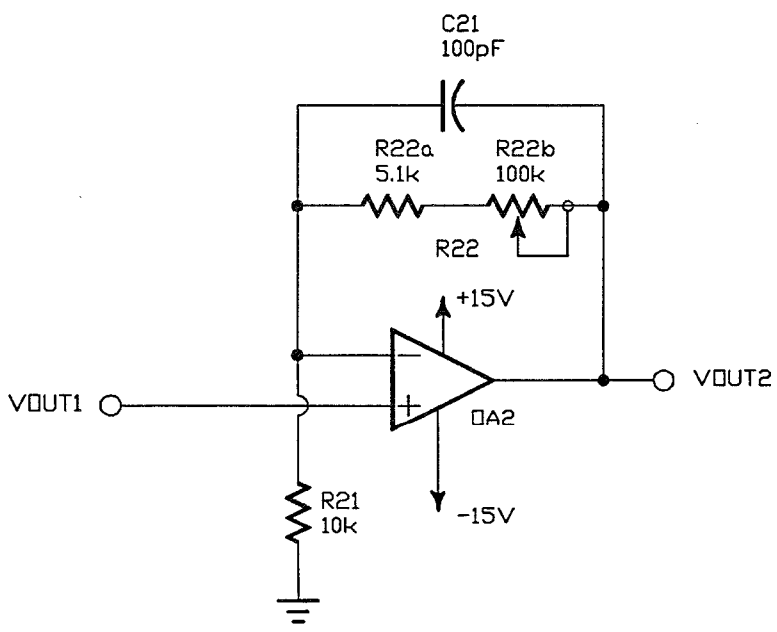

Figure 6. Stage 2 of the fuse blower circuit

Stage 2 is a non-inverting amplifier. The input to this stage is VOUT1, the output of the first stage. C_{21} is selected to assure circuit stability. If R_{22} is used to represent the sum of R_{22a} and R_{22b}, the transfer function for the second stage is given by

$$\frac{V_{OUT2}}{V_{OUT1}} = \left(1 + \frac{R_{22}}{R_{21}}\right). \tag{3}$$

When R_{22a} = 5.1 kΩ, R_{22b} = 0 Ω, and R_{21} = 10 kΩ, V_{OUT2}/V_{OUT1} = 1.51 V/V; because R_{22b} has the lowest possible value, this is the minimum voltage gain for the second stage. For R_{22a} = 5.1 kΩ, R_{22b} = 100 kΩ, and R_{21} = 10 kΩ, V_{OUT2}/V_{OUT1} = 11.51V/V; this is the maximum voltage gain for the second stage if the maximum value of R_{22b} is 100 kΩ. If the value of R_{22b} is determined by the setting of a potentiometer, this setting can be selected to obtain a particular gain.

The circuit for the third stage is shown in Figure 7. The circuit operates in the following way. The output of the comparator will be near zero volts as long as the voltage out of Stage 2 is less than the reference voltage of 4 V plus a diode voltage drop of about 0.7 V. As long as the output of the comparator is near zero volts, current from resistor R34 will flow into the comparator. A comparator is a very high gain amplifier that is able to either sink or source current. If the output of Stage 2 increases just a few millivolts above about 4.7 V, the output of the comparator will change from about zero volts to nearly the positive supply voltage. This voltage is 28 V in the circuit shown. When the output of the comparator goes high, current from R34 and from the comparator will turn on the transistor, which in turn will provide current to turn on the SCR. Once the SCR turns on, there will be a low resistance path directly from the power supply to ground. Because the fuse is in this path, it experiences a surge of current when the SCR turns on and opens quickly. When the fuse opens, the power supply is disconnected from the circuitry.

Component values are chosen so that current through R34 is sufficient to bias transistor Q1 into the conducting state. This means that if the comparator fails as an open circuit, Q1 will turn on, the SCR will conduct, and the fuse will open and disconnect the power source.

If a logical OR circuit is placed ahead of the comparator or ahead of the drive transistor, a number of out-of-bounds conditions can be sensed and used to fire the SCR. For example, over voltage and excessive case temperature as well as over current will change the state of the comparator and trigger the SCR in the UA5088. Diodes D1 and D2 represent diodes in logical OR circuits used in the UA5088.

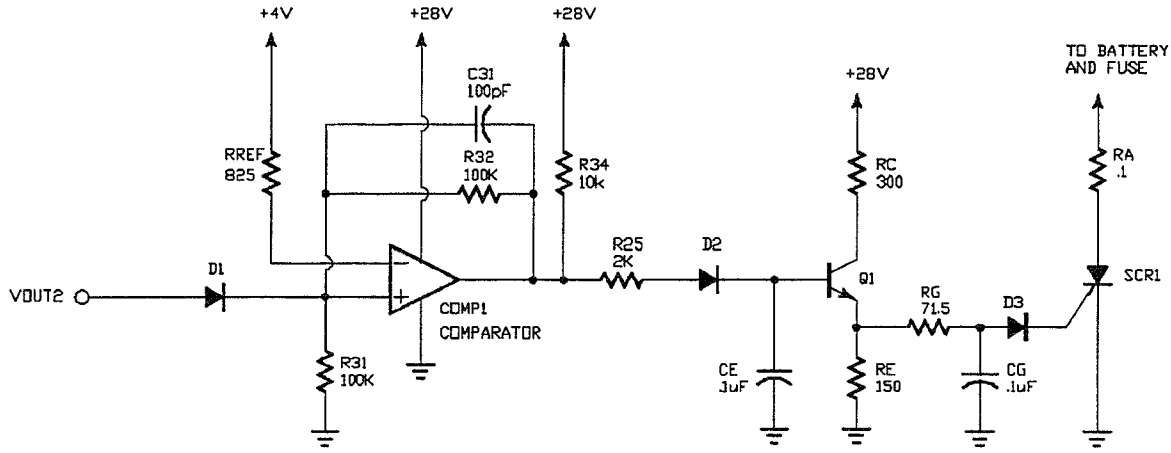

Figure 7. Stage 3 of the UA5088 fuse blower circuit

The results from Eqs. (2) and (3) can be combined to yield

$$\frac{V_{OUT2}}{I_{LOAD}} = \frac{V_{OUT1}}{I_{LOAD}} x \frac{V_{OUT2}}{V_{OUT1}} = \frac{R_{15}}{R_{11}+R_{12}} R_{SENSE}\left(1+\frac{R_{22}}{R_{21}}\right). \tag{4}$$

The load current at which the SCR will be fired is given by

$$I_{LOAD} > \frac{V_{REF}+0.7V}{\frac{R_{15}}{R_{11}+R_{12}} R_{SENSE}\left(1+\frac{R_{22}}{R_{21}}\right)}. \tag{5}$$

For R_{22b} equal to 100 kΩ and for the other component values already given, the SCR is triggered when I_{LOAD} exceeds approximately 1.1 A. When R_{22b} is equal to zero, the SCR is triggered when I_{LOAD} exceeds approximately 8.3 A.

Circuit analysis, computer simulation, and experiments were used to identify the failure modes of the fuse blower circuit and to determine the effects of these failures.

> **A failure is said to result in a *safe condition* if, as a result of the failure, the SCR is triggered immediately, or, after the fault, the SCR would be triggered for load currents not larger than the intended maximum current. A failure is said to result in an *unsafe condition* if neither of these conditions apply.**

Table 2 shows the failure modes and effects for the passive components in the circuits shown in Figures 5 through 7.

Table 2. Failure modes and effects for the passive components

Element	Failure Mode	Effect	Explanation
R_{11}	Open	Safe for $R_L>R_{16}/(R_{13}+R_{14})*R_S$ Unsafe otherwise	Determined for Eq. (1)
	Short	Safe for $R_L<R_{16}/(R_{13}+R_{14})*R_S$ Unsafe otherwise	Determined for Eq. (1)
R_{12}	Open	Safe for $R_L>R_{16}/(R_{13}+R_{14})*R_S$ Unsafe otherwise	Same as R_{11} open
	Short	Safe for $R_L<R_{16}/(R_{13}+R_{14})*R_S$ Unsafe otherwise	Same as R_{11} short
R_{13}	Open	Unsafe	Determined from Eq. (1)
	Short	Safe	Determined from Eq. (1)
R_{14}	Open	Unsafe	Same as R_{13} open
	Short	Safe	Same as R_{13} short
R_{15}	Open	Safe for $R_L<R_{16}/(R_{13}+R_{14})*R_S$ Unsafe otherwise	Determined from Eq. (1)
	Short	Safe for $R_L>R_{16}/(R_{13}+R_{14})*R_S$ Unsafe otherwise	Determined from Eq. (1)
R_{16}	Open	Safe	Determined from Eq. (1)
	Short	Unsafe	Determined from Eq. (1)
C_{11}	Short	Unsafe	Same as R_{16} short
C_{12}	Short	Safe for $R_L>R_{16}/(R_{13}+R_{14})*R_S$ Unsafe otherwise	Same as R_{15} short
R_{21}	Short	Safe	The gain of the second stage becomes infinity
R_{21}	Open	Unsafe	Gain of second stage is decreased
R_{22a}	Short	Unsafe	Gain of second stage is decreased
	Open	Safe	Gain of the second stage becomes larger
R_{22b}	Short	Unsafe	Same as R_{22a}
	Open	Safe	Same as R_{22a}
C_{21}	Short	Unsafe	Gain of the second stage is reduced
R_{REF}	Short	Safe	No effect on the output of the comparator
	Open	Unsafe	The output of the comparator is low
R_{31}	Short	Unsafe	Little effect on output of the comparator
	Open	Safe	No effect on the output of the comparator
R_{32}	Short	Safe	There is enough current through R_{34} and R_{35} to trigger the SCR
	Open	Safe	No effect on the output of the comparator
C_{31}	Short	Safe	The same as R32 short

Table 2. Failure modes and effects for the passive components (Continued)

Element	Failure Mode	Effect	Explanation
R_{34}	Short	Safe	The output of the comparator is always high
	Open	Unsafe	The output terminal of the comparator (the collector of a BJT) is no longer has a pull-up resistor raise the output high enough to trigger the SCR
R_{35}	Short	Safe	Q_1 still turns on.
	Open	Unsafe	Cannot turn on Q_1
C_E	Short	Unsafe	The base of Q_1 is grounded
R_C	Short	Safe	Q_1 is forced active which results in the SCR triggering.
	Open	Unsafe	The circuit will not trigger the SCR
R_E	Short	Unsafe	V_E is grounded. No trigger voltage or current to trigger the SCR
	Open	Safe	Increases the gate current to the SCR
R_G	Short	Safe	Increases the gate current to the SCR, but this condition may damage the SCR
	Open	Unsafe	No trigger current
C_G	Short	Unsafe	The gate of the SCR is shorted to ground.

Table 3 shows the possible failure modes for the various power supplies and the effects of each failure. To evaluate the effects of the various failures, it was assumed that one source supplied all 28 V power, that one ±15 V source supplied power to both of the op-amps, and that the 4-V reference was obtained from a zener diode circuit that was powered by the 28-V supply. The effects of various failures of the transistor, Q1, are shown in Table 4, the effects of various failure modes of the SCR are shown in Table 5, and Table 6 shows the failures modes of the op-amps and the comparator and the effects of these failure modes.

Table 3. Failure modes and effects of the power supplies

Supply	Failure Mode	Effect	Justification
+15-V source	Short to ground	Unsafe	The output of both of the op-amps are clamped to the upper rail voltage of about 0V.
	Open circuit	Unsafe	Both op-amps saturate to the negative rail voltage of about -13.5 V.
-15-V source	Short to ground	Safe	Both op-amps saturate to the positive rail voltage of about 13.5 V.
	Open circuit	Safe	Both op-amps saturate to the positive rail voltage of about 13.5 V.

Table 3. Failure modes and effects of the power supplies (Continued)

Supply	Failure Mode	Effect	Justification
+28-V source	Short to ground	Safe	No power applied to the circuit. It is assumed that the load circuitry requires the 28-V source as wel.l
	Open circuit	Safe	No power applied to the circuit. It is assumed that the load circuitry requires the 28-V source as well.
+4 V source	Short to ground	Safe	The voltage from the second stage needed to fire the SCR becomes lower.
	Open circuit	Unsafe	The output of the comparator is indeterminate.

Table 4. Failure modes and effects of the transistor

Failure Mode	Effects	Justification
Collector-Emitter (C-E) Short	Safe	The circuit triggers the SCR
Collector-Base (C-B) Open	Unsafe	The circuit will not trigger the SCR
C-B Short	Safe	The circuit triggers the SCR
B-E Open	Unsafe	The SCR is disconnected from the circuit
B-E Short	Unsafe	The circuit will not trigger the SCR

Table 5. Failure modes and effects of the SCR

Failure Mode	Effect	Justification
Anode-Cathode (A-C) Open	Unsafe	The SCR is an the open circuit. No complete path for current to flow to blow the fuse
A-C Short	Safe	The fuse blows, nearly the same state as had the SCR been fired
Anode-Gate (A-G) Open	Unsafe	The SCR never turns on.
Anode-Gate Short	Safe	The SCR is latched on.
C-G Open	Unsafe	No trigger current to trigger the SCR, the A-C terminals may not short
C-G Short	Unsafe	Most likely that SCR could not be turned on from the gate

Table 6. Failure modes and effects of the op-amps and the comparator

Component	Failure Mode	Effect	Justification
Op-Amp 1 (OA1)	Output stuck high	Safe	High output trips SCR
	Output stuck low	Unsafe	Low output will not trip SCR
	Output short to ground	Unsafe	Low output will not trip SCR
	Output stuck open	Unsafe	Low output (although not 0 V) will not trip SCR
Op-Amp 2 (OA2)	Output stuck high	Safe	High output trips SCR
	Output stuck low	Unsafe	Low output will not trip SCR
	Output short to ground	Unsafe	Low output will not trip SCR
	Output stuck open	Unsafe	Low output will not trip SCR
Comparator (COMP1)	Output stuck high	Safe	High output trips SCR
	Output stuck low	Unsafe	Low output will not trip SCR
	Output short to ground	Safe	Same condition as output high for open collector output
	Output stuck open	Unsafe	Low output will not trip SCR

The circuits shown in Figures 5 through 7 were built and tested. For the first set of tests, the value of R_{22b} was adjusted so the SCR would be triggered when the current to the load was about 3.0 A. This selection of trip current was convenient, but arbitrary. Voltages measured in the circuit for various values of the load current are shown in Table 7. There was good agreement between the measured values and the values determined from circuit analysis.

The input voltage-to-output voltage transfer function of the Stage 1 circuit was measured as a function of temperature. The circuit was placed in a forced air oven, and the oven set point temperature was adjusted upward as necessary to obtain a sequence of increasing circuit temperatures. Circuit temperature was obtained from a thermocouple probe attached to the circuit. The entire set of tests were completed within a few hours. The results of the tests are shown in Table 8.

The data in Table 8 show that the first stage circuit operated at temperatures up to 195 C, which was the maximum temperature that could be obtained with the laboratory oven. This result was somewhat surprising because the LM148J is rated only for use up to 125 C.

Tests were conducted to determine how the operational amplifier in the first stage would respond to higher than specified supply voltages. The results are shown in Table 9.

Table 7. Voltages measured in the experimental fuse blower circuit for various load currents

ILoad (A)	0.01	0.5	1	1.5	2	2.5	3.06	3.5
VR_{sense} (mV)	0.8	50.2	99.9	150.7	202	253	314	363
VR11 (mV)	0.4	14.7	32	47.7	62.9	71.4	86.7	97.7
VR12(mV)	0.7	40.4	80.9	121.1	161.3	202	248	284
VR13(mV)	0.4	14.7	29	43.8	57.8	71.3	86.4	97.6
VR14(mV)	0.7	40.5	81	121.8	162	202	249	285
VR15(mV)	-2.7	-109.7	-218	-324	-429	-528		-726
VR16(mV)	-6.3	-521	-1043	-1576	-2110	-2650		
VOUT1 (mV)	1.8	193.7	390	588	789	989	1225	1412
VOUT2 (mV)	9.3	717	1435	2170	2910	3640	4520	5210
VR34(V)	27.9	27.9	27.9	27.9	27.9	27.9		18.05
Comparator output (V)	0.148	0.147	0.147	0.148	0.148	0.149	9.97	9.96
VB(V)	0.085	0.083	0.083	0.083	0.083	0.085	5.81	5.8
VC(V)	28	28	28	28	28	28	5.2	5.2
VG(V)	0	0	0	0	0	0	0.824	0.823
VA(V)	28	28	28	28	28	28	0.864	0.863

The measurements were made with the circuit in room air (approximately 27 C). A few entries are blank because the measurements could not be retrieved.

VB = voltage at base of Q1, VC = voltage at collector of Q1, VG = voltage at gate of the SCR, and VA = voltage at the anode of the SCR

Table 8. The results of operating the Stage 1 circuit at elevated temperatures

T = 55		T = 80		T = 105		T = 120	
Vin (mV)	Vout (V)	Vin (mV)	Vout (V)	Vin (mV)	Vout (V)	Vin (mV)	Vout (V)
0	0.0014	0	0.0017	0	0.0021	0	0.003
500	1.868	500	1.869	500	1.872	500	1.865
1000	3.74	1000	3.74	1000	3.74	1000	3.74
2000	7.49	2000	7.48	2000	7.45	2000	7.5
3000	11.21	3000	11.23	3000	11.2	3000	11.2
3813	14.29	3813	14.33	3813	14.38	3813	14.39
4000	14.29	4000	14.33	4000	14.38	4000	14.39

Table 8. The results of operating the Stage 1 circuit at elevated temperature (Continued)

T = 140		T = 155		T = 170		T = 195	
Vin (mV)	Vout (V)	Vin (mV)	Vout (V)	Vin (mV)	Vout (V)	Vin (mV)	Vout (V)
0	0.003	0	0.0063	0	0.0192	0	0.029
500	1.865	500	1.87	501	1.882	501	1.917
1000	3.74	1000	3.75	1000	3.75	1000	3.77
2000	7.49	2000	7.51	2000	7.51	2000	7.53
3000	11.22	3000	11.21	3000	11.25	3000	11.26
3890	14.45	3880	14.45	3880	14.51	3880	14.48
4000	14.45	4000	14.45	4000	14.51	4000	14.48

Table 9. The results of operating the Stage 1 circuit with nominal and above nominal supply voltages for the operational amplifier

Power supply voltage at ±15V										
Vin(mV)	0	505	1001	1500	2000	2500	3000	3500	3800	4000
Vout(V)	1 mV	1.88	3.74	5.6	7.48	9.35	11.19	13.1	14.2	14.21
Power supply voltage increased to ±20V for 2 minutes, then returned to ±15V										
Vin(mV)	0	506	1000	1500	2000	2500	3000	3500	3800	4000
Vout(V)	1 mV	1.89	3.73	5.6	7.48	9.35	11.21	13.1	14.2	14.22
Power supply voltage increased to ±25V for 2 minutes, then returned to ±15V										
Vin(mV)	0	500	1000	1500	2000	2500	3000	3500	3840	4000
Vout(V)	0.00	1.86	3.73	5.6	7.47	9.34	11.2	13.1	14.3	14.33

Power supply voltage increased to ±30V for 2 minutes, then returned to ±15V										
1000	0	500		1500	2000	2500	3000	3500	3840	4000
3.73	0.00	1.87		5.6	7.48	9.35	11.19	13.1	14.3	14.3
Power supply voltage increased to ±35V for 3 minutes, then returned to ±15V										
1000	0	5002		1500	2000	2500	3000	3500	3830	4000
3.73	0.00	1.87		5.6	7.48	9.35	11.22	13.1	14.2	14.3

The results showed that the operational amplifier would tolerate short duration excursions in the power supply voltage. Since no failures occurred, the operational amplifier was subjected to a more rigorous test. The test conditions and results are shown in Table 10.

Table 10. The results of subjecting the operation amplifier in the Stage 1 circuit to higher than normal power supply voltages

Power supply voltage of +/- 20 V									
Vin(mV)	0	1000	2000	3000.	4000	5000	5170	5500	6000
Vout(V)	0.00	3.73	7.48	11.2	14.9	18.6	19.2	19.2	
Power supply voltage of +/- 30 V for 5 minutes, then back to +/- 20 V									
Vin(mV)	0	1000	2000	3000	4000	5000	5170	5500	6000
Vout(V)	0.00	3.74	7.5	11.2	15.0	18.7	19.3	19.2	
Power supply voltage increased to +/- 30 V and left at this voltage									
Vin(mV)	0	1000	2000	3000	4000	5000	5170	5500	6000
Vout(V)	0.01	3.75	7.53	11.2	14.7	18.2			22.5
Power supply voltage of +/- 33.8 V									
Vin(mV)	0	1000	2000	3000	4000	5000	5170	5500	6000
Vout(V)	0.00	3.75	7.52	11.2	15.0	18.7			22.5
The op-amp failed at the supply voltage of ±34.5V, after failure, the amplifier output was -32 V									

As shown in Table 10, the op-amp failed when the supply voltage was increased to +/- 34.5 V. The test was repeated a number of times with the same result. In all instances, when an amplifier failed, the output voltage was about -32 V.

A set of tests was conducted to determine how the operational amplifier would be effected by the combination of elevated temperature and higher than normal supply voltage. The Stage 2 circuitry shown in Figure 3 was used for this test. The value of R22b was adjusted so that the stage had a voltage gain of 5. Results are shown in Table 11. The tests were conducted with the circuits in a laboratory oven. The oven temperature was adjusted until the desired circuit temperature was obtained. Then, the supply voltage was turned on and the output voltage was measured for various input voltages. The sequence of measurements took less than 5 minutes. The power supply voltage was increased and the input-output measurements were repeated. Finally, the power supply was turned off and the oven was adjusted for the next temperature. It took approximately 25 minutes to go from one temperature to the next.

Table 11. The results of testing a Stage 2 circuit at various temperatures and at supply voltages of +/- 15 V (nominal) and +/- 30 V

T =25				T = 80			
Supply = +/- 15 V		Supply = +/- 30 V		Supply = +/- 15 V		Supply = +/- 30 V	
Vin(V)	Vout(V)	Vin(V)	Vout(V)	Vin(V)	Vout(V)	Vin(V)	Vout(V)
0	0.002	0	0.002	0	-0.005	0	-0.006
1	5.00	1	5.00	1	5	1	5
2	9.99	2	9.99	2	9.99	2	9.99
2.9	14.3	4	19.8	2.87	14.3	3	15.0
		5	24.7			4	19.9
		5.86	29.2			5	25

T = 130				T = 170			
Supply = +/- 15 V		Supply = +/- 30 V		Supply = +/- 15 V		Supply = +/- 30 V	
Vin(V)	Vout(V)	Vin(V)	Vout(V)	Vin(V)	Vout(V)	Vin(V)	Vout(V)
0	-0.006	0	-0.007	0	0.014	0	0.023
1	4.99	1	4.97	1	5.05	1	5.04
2	9.98	2	9.99	2	10.05	2	10
2.89	14.4	3	15.0	2.91	14.5	3	15.1
		4	20			4	20.1
		5	24.9			5	Value not recorded

T=190 C			
Supply = +/- 15 V		Supply = +/- 30 V	
Vin(V)	Vout(V)	Failure	
0	0.077		
1	5.07		
2	10.1		
2.89	14.5		

The data in Table 11 for operation at nominal supply voltage and elevated temperature are consistent with the data shown in Tables 9 and 10 for operation at nominal voltage and elevated temperature. This should be the case; it is comforting that the data confirm the expectation. Comparisons of the data Table 11 with those in Tables 8 and 10 show the combination of higher than normal supply voltage and elevated temperature did not result in failure at much lower supply voltage or temperature than would have been expected for the application of either stress separately.

The Stage 3 circuit was tested at various temperatures and with various supply voltages. The sequence of events - ramp temperature, set voltages, take data - was essentially the same as that used for the tests summarized in Table 11. Results that show the operation of the comparator are given in Table 12. Tests were also run with the circuit at 130 C and 160 C. The results were essentially the same those shown. The results show that the voltage reference circuit and the comparator functioned correctly for at least short periods at temperatures up to 195 C and for supply voltages up to 60 V. The maximum test temperature was well above the maximum rated continuous use temperature of 125 C for the comparator.

Table 12. The results of tests of the voltage reference and the comparator at various temperatures and supply voltages

T = 25 C					T = 100 C				
Supply (V)	VREF (V)	VTRIP(V)	VOL (V)	VOH (V)	Supply (V)	VREF (V)	VTRIP(V)	VOL (V)	VOH (V)
28	4	4.03	0.157	25.8	28	3.92	3.94	0.182	25.8
40	4.12	4.16	0.21	36.8	40	4.05	4.07	0.246	36.7
45	4.15	4.19	0.235	41.3	50	4.08	4.12	0.308	45.8
50	4.18	4.25	0.259	45.8	55	4.09	4.14	0.343	50.4
60	4.24	4.27	0.327	54.9	60	4.09	4.15	0.388	54.9
T = 195 C					T = 30 C (after test at 195 C)				
Supply (V)	VREF (V)	VTRIP(V)	VOL (V)	VOH (V)	Supply (V)	VREF (V)	VTRIP(V)	VOL (V)	VOH (V)
28	3.71	3.72	0.323	25.6	28	3.99	4.03	0.158	25.8
40	3.84	3.86	0.426	36.5	40	4.09	4.13	0.213	36.8
50	3.9	3.93	0.518	45.7	50	4.14	4.18	0.258	45.8
55	3.91	3.94	0.569	50.2	55	4.17	4.2	0.285	50.3
60	3.92	3.96	0.623	54.6	60	4.21	4.25	0.319	54.9

Tests were conducted to determine the maximum collector to emitter voltage the transistor, Q1, would sustain at various temperatures. The tests were conducted with the transistor in the Stage 3 circuit shown in Figure 7. The elevated supply voltages were applied to the comparator and the resistor R34, as well as to the transistor. The voltage to the transistor was applied through resistor RC. The input to the comparator was set so that the comparator output was at the low level; therefore, no base current was supplied to the transistor. The test provided a measure of what is referred to as the collector-emitter breakdown voltage measured with the base open. The results are shown in Table 13.

Table 13. The maximum voltage that the transistor in the Stage 3 circuit would hold off

Temperature (C)	Maximum voltage (V)
25	55
110	54
140	50
170	35
190	approx. 21

The data show that the transistor would hold off the nominal 28 V supply voltages at temperatures up to at least 170 C. It was shown in Table 4 that a short between the collector and emitter of the transistor is a "safe" failure because when the short occurs, the SCR will be triggered to the *ON* state.

The entire fuse blower circuit, that is the combination of Stages 1, 2 and 3, was tested at various temperatures. The circuit was configured so that the SCR would be triggered when the load current slightly exceeded 3 A. The configuration was the same as the one used to gather the data shown in Table 7. Test results are given in Table 14. The quantity labeled IT is the load current at which the SCR was triggered *ON*, and the quantity labeled VAK is the voltage measured across the SCR after it had turned *ON*. The second set of values shown for the temperature of 30 C were taken after all of the other tests had been completed.

The data show that the load current at which the SCR was fired decreased as the temperature of the circuit increased. This was the expected behavior; it would be beneficial in most all applications of a fuse blower. For example, if heating of the circuit were the result of a malfunction in an adjacent piece of apparatus or the result of a fire in the room in which the fuse blower was located, operation of the SCR at lower load current would provide additional protection. Note that when the temperature reached 190 C, the SCR was not able to hold off the 28 V supply voltage. This feature of the SCR would also result in a safe failure mode.

Table 14. Results obtained when the entire fuse blower was heated in an oven. The second set of data for T = 30 C were taken after the 30 C to 195 C temperature sequence had been completed.

T(°C)	30	50	65	80	95	110
IT(A)	3	2.98	2.95	2.88	2.82	2.76
VAK(V)	0.951	0.939	0.929	0.917	0.901	0.879
T(°C)	125	150	180	195	30	
IT(A)	2.7	2.54	2.38	0	2.99	
VAK(V)	0.863	0.881	0.783	0.752	0.963	

For the test that was just described, the entire circuit was placed in the oven. Tests were also conducted to determine what would happen if only part of the circuit were heated. Partial heating could occur if parts of the circuit were located in different places. For example, most of the circuitry might be located inside a cabinet, but the SCR might be located on a heat sink that was attached to the side of the cabinet. If a fire occurred outside of the cabinet, the side of the cabinet and the SCR might become quite hot before the temperature of the circuits increased significantly. The situation could be quite different if the source of heat was internal to the cabinet. If this were the case, the circuit board might become quite hot before the temperature of the SCR increased significantly. The results of tests in which only the SCR was placed in the oven are shown in Table 15.

Table 15. Results obtained when only the SCR was heated in an oven

T(°C)	30	50	70	88	105	120
IT(A)	3	3	3	2.99	3	2.99
VAK(V)	1.015	0.975	0.959	0.939	0.912	0.892
T(°C)	130	160	170	185	195	30
IT(A)	2.99	2.99	2.99	2.99	0	3
VAK(V)	0.876	0.84	0.847	0.907	0.871	1.001

The data in Table 15 show that when only the SCR was placed in the oven, the load current at which the SCR was triggered did not decrease as the temperature increased. Note that when the temperature reached 190 C, the SCR was not able to hold off the 28 V supply voltage. As was mentioned above, this feature of the SCR would result in a safe failure mode.

Many failure modes of the fuse blower have been identified and the consequences of failures have been presented. Any failure that prevents the triggering of the SCR leads to an unsafe condition. Examination of the various tables in this section shows that there are a number of

single failures that will prevent triggering. Therefore, the fuse blower is vulnerable to many single point failures. The experimental data show that the op-amps and the comparator used in the UA5088 will tolerate, for at least a few minutes, temperatures up to 190 C and supply voltages up to 60 V. This means that these key parts will most likely function if the fuse blower is subjected to high temperature from a fire or to high voltage from a surge on power lines or from an unintended connection of batteries. More discussion of the results and data for the fuse blower will be found in Section 7.

Section 5. Resistor Current Limiters

Consider the simple electrical circuit shown in Figure 8. The nominal current, I_{nom}, through the load is given by Eq. (6).

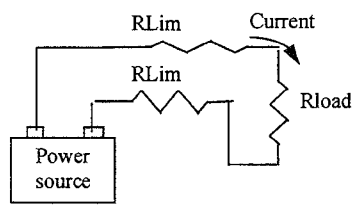

Figure 8. A simple resistive current limiter. It is recommended practice to place a resistor in both the supply and return leads.

$$I_{Nom} = V / (R_{source} + 2R_{limiter} + R_{load}) \tag{6}$$

In Eq. (1), R_{source} includes any resistance associated with the source and the wiring, $R_{limiter}$ is the resistance of each resistive current limiter, and R_{load} includes all resistance associated with the load. It is recommended practice to put a current limiting resistor in both the drive line and the return line. Normally, the two resistors have the same value; the modification to Eq (6) if they have different values is obvious. The impedances of the source, the limiting resistors, and of the load may depend on the frequency. Because the essential facts about resistive limiters can be developed without the introduction of frequency dependent impedances, they will not be introduced. However, it is often necessary to consider inductive and capacitive reactance as well resistance in the analysis of specific tester-to-weapon interfaces.

If R_{load} decreases to zero, that is, if the load is "short circuited" the current increases to

$$I_{SC} = V/(R_{source} + 2R_{lim}) . \tag{7}$$

The ratio of short circuit current to the nominal current is given by

$$I_{SC}/I_{nom} = (R_{source} + 2R_{lim} + R_{load})/(R_{source} + 2R_{lim}) . \tag{8}$$

If the resistance of the source is small compared to the other resistances, Eq.(8) can be rewritten in terms of the nominal source voltage, V, and the voltage, V_{load}, across the load; the result is

$$I_{SC}/I_{nom} = V/(V-V_{load}) \cdot \qquad (9)$$

Consider the following examples. The nominal current in a 28 V monitor circuit is 10 milliamperes. If two 140 Ω limiting resistors are placed in the circuit, there will be a 2.8 V drop across them. In most instances, a drop of this size would be acceptable. If some fault occurs, the resistors will limit the current to 100 milliamperes. As discussed in Section 2, a 100 milliampere current will not usually create significant risk. Now suppose that the nominal current is 1 ampere. Many specifications require that the voltage to this large a load be at least 24 V; that is, the drop between the voltage source, usually a battery, and the load shall not exceed 4 V. If the source voltage is 28 V and the drop across the limiting resistors is 4 V, that is, the drop across the load is 24 V, then, from Eq.(9), the short circuit current will be seven times the nominal current. In many applications, an increase from 1 ampere to 7 amperes would not be acceptable.

It is not possible to state absolutely when resistor current limiters can be used and when they cannot be used. However, experience suggests that they can often be used in testers when the nominal current does not exceed a few tens of milliamperes, but that they can rarely be used when the nominal current is as large as 1 ampere.

Because the output current is proportional to the source voltage, as shown by Eq. (6), a resistive limiter provides little or no protection against over voltage at the source. Consider again the just discussed example of a limiter for a 1-ampere circuit. Then, suppose the short at the load occurred because the source voltage tripled. If this occurred, that is, the load resistance decreased to zero and the source voltage increased to 84 V, the output current would increase to 21 A. It is difficult to imagine any piece of test equipment or PAL gear for which such an increase in output current would be acceptable.

DG10001 requires the use of redundant, mechanically rugged, current limiters. In the case of resistor limiters, this has been interpreted to mean the use of two different resistors that are mechanically and thermally isolated from each other. In most recent designs, the resistors have been placed in protective metallic enclosures. Furthermore, care has been taken to make sure the resistors cannot be easily bypassed. In particular, wiring layouts have been designed and carefully specified so that the input to a limiter and the output from it do not end up in the same wiring bundle. The need to consider the layout of wiring cannot be over emphasized since experience has shown that the desired layouts are often quite different from the neat, tightly bundled ones technicians are trained to make.

Work was done to determine what type of resistors could be used in limiter circuits. The results of the work are documented in a memo from R. V. Baron to D. H. Loescher. A copy of this memo is found in Appendix A.

6. Current Limiters with Diodes, Transistors, and SCRs

A failure modes and effects analysis was conducted on three basic types of active current limiters. The circuits for the three limiters, which will be referred to as the types A, B, and D limiters are shown in Figures 9, 10, and 11, respectively. The use of letter designations for the types of limiters was initiated sometime in the early 1990s and is carried into this work. The letter designation for each type of limiter was arbitrarily selected; there is no relation between circuit details and the letters. There was a Type C limiter which was based on the LM117 integrated circuit. Because it was not subjected to a thorough analysis, it will not be discussed further in this report.

To determine the results of component failure, simulations were run for each component or junction short circuited and for the same component or junction open circuited. The simulations were most usually run for both some nominal load resistance and for a short circuited load.

> **A failure was said to result in a *safe condition* if, after the failure, the load current would not ever be larger than the intended maximum current and the power dissipations in all components are within the ratings for the components. A failure was said to result in an *unsafe condition* if these conditions did not apply.**

6.1. Evaluation of the Type A Limiter

The circuit schematic for the Type A current limiter is shown in Figure 9. This limiter consists of three resistors, R1, R2, and R3, a power PMOS transistor M1, a pnp transistor, Q1, and a zener diode, DZ1. The gate bias for the PMOS transistor is chosen so that under normal conditions there is very little voltage drop across this transistor. This bias can be set in one of two ways. The resistors R2 and R3 can be selected so that M1 is normally turned fully on. If this is done, R3 must be small enough so that leakage currents through Q1 and M1 do not effect the bias point. In this biasing method, DZ1 is used to prevent excessive voltage between the gate and source from damaging the MOSFET. Alternately, R2 can be taken out of the circuit, or made very large, and the bias can be fixed by DZ1. If this is done, R3 is selected so that current through the zener diode is large enough to establish a stable bias point. A bias point established by the second method will be less sensitive to variations in input voltage than will be a bias point established by the first method.

Transistor Q1 and resistor R1 form a feedback path through which the bias on the gate of M_1 is adjusted so that the load current does not exceed I_{MAX} given by:

$$I_{MAX} = (V_{EB(Q1)})/R1 \tag{10}$$

It is good design practice to place resistors in series with the base and collector of Q_1 and in series with the gate of M_2 to protect these transistors from damage. Such protective resistors, which are not essential to the operation of the circuit, were not included in the analyses.

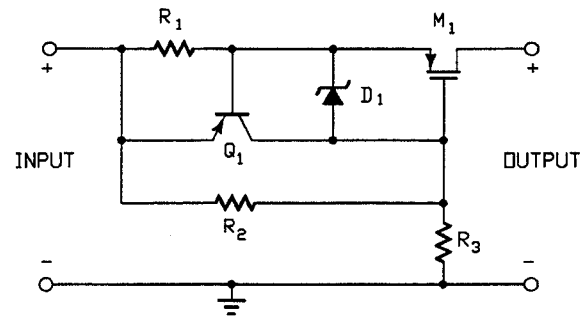

Figure 9. A schematic of the Type A, series MOSFET limiter

A Type A circuit was designed for I_{MAX} equal to 1A dc and input voltage equal to 28V dc. PSpice simulations were run to determine how changes in component values, in input voltage, and in load resistance effect the load current. The component values are shown in Table 16. The combination of values does not represent a good design because some values were chosen so that the effects of faults could be shown clearly. In particular, the zener voltage of the IN4746A is 18V, which is quite close to the maximum recommended gate-to-source voltage for the MOSFET. Also, the value of R2 is so high that the gate-to-source voltage on the MOSFET exceeds the recommended maximum if the zener fails as an open circuit. Good design practice would lead to the use of a zener diode with a lower zener voltage, and to the selection of a value of R2 that did not result in too high a voltage on the MOSFET. As long as there were not any faults, the limiting action of the circuit would be the same if R_2 were omitted. Note, the component values were chosen to provide clear results for a FMEA; they were not chosen as examples of good design practice.

Table 17 shows the calculated power dissipation in each component of the example Type A limiter. The calculations were done for V_{IN} = 28V and a shorted load.

Table 16. Type-A component values for I_{max} = 1 A

Component	Type	Value/Part No.
R1	Resistor	0.75 Ω
R2	Resistor	10 kΩ
R3	Resistor	500 Ω
Q1	PNP BJT	2N2907
M1	PMOSFET	IRF91W
DZ1	Zener Diode	1N4746A
VIN	Power Supply	28V DC

The following limits apply for the components selected:

Q1: V_{CE} >-40 V; V_{CB}>-60 V; V_{EB}>-5 V

M1: V_{DS} < 60 V; V_{DG}> 60 V; $V_{GS(MAX)}$> -20 V

DZ1: V_{DZ} < 30 V.

Table 17. Type-A power dissipation for VIN = 28 V for shorted output

Components	Worst Case Power Dissipation	Recommended Power Ratings
R1	0.90 W	3.0 W
R2	2.7 mW	0.15 W
R3	0.93 W	3.0 W
DZ1 (1N4746A)	Negligible	1.0 W
Q1 (2N2907)	0.21 W	1.2 W
M1 (IRF9130)	29.8 W	75.0 W

The simulation results for a source-to-drain short at the PMOSFET are shown in Table 18. The simulation results showed that a current of 44 A would flow if this failure occurred when the load was shorted. They also showed that the power rating of every component was exceeded. This means that a cascade of failures would most likely eliminate all current limiting capability of the circuit.

Table 18. Source-drain of M1 shorted and load shorted

Component	W.C. Power Dissipation	Power Rating	Power Rating Exceeded for
R1	1040 W	3 W	R_L< 12 W
R2	75 mW	125 mW	---
R3	1.1 W	3 W	---
DZ1	23 W	1 W	R_L< 5.3 W
Q1	730 W	1.2 W	R_L< 7.5 W
M1	---	75W	---
I_{LOAD} = 44 A for R_L = 0 W			
Breakdown Voltages V_{BE} & V_{SG} are exceeded for RL< 3 W & RL< 0.3 W, respectively.			

The simulation results for a gate-to-drain (G-D) short at M1 are shown in Table 19. For a G-D short, the worst case load current was 47 A for a shorted load. The maximum power ratings of the pnp transistor, Q1, and the resistor, R1, were exceeded. Therefore, the failure results in a unsafe failure of the limiter.

An open circuit source-to-drain (S-D) failure of M1 is a safe failure condition because the power source would be isolated from the load. An open circuit gate-to-drain (G-D) failure is a safe failure condition as M1 is off, and the load is isolated from the power supply. Such a failure would most likely be the result of break in the connection between the transistor package and the semiconductor chip. As shown in Table 20, source-to-gate (S-G) short of M1 results in a fail safe condition. Because the zener diode DZ1 and the base-collector (B-C) junction of Q1 are in parallel with the S-G of M1, a short in DZ1 or a B-C short in Q1 will give similar results. Therefore, a shorted DZ1 or a shorted B-C junction in Q1 are also safe failure conditions. None of the breakdown voltages is exceeded for this failure mode.

If the emitter-base (E-B) junction of Q1 is short circuited, R1 is bypassed and all control is lost. For the example circuit, simulation showed that the load current would be 64 A; and the power rating of M1 would be exceeded. However, none of the breakdown voltages would be exceeded. The results of the simulation are shown in Table 21.

Table 19. Gate-drain of M1 shorted

Component	Power Dissipation	Power Rating	Power Rating Exceeded for
R1	416 W	3 W	$R_L < 4.2\ \Omega$
R2	80 mW	125 mW	$R_L < 10E\text{-}3\ \Omega$
R3	Negligible	3 W	---
DZ1	Negligible	1W	---
Q1	610 W	1.2 W	$R_L < 16.6\ \Omega$
M1	260 W	75 W	$R_L < 0.85\ \Omega$
I_{LOAD} = 47 A for R_L = 0 W			
Breakdown voltage V_{EB} was exceeded for R_L < 1 W.			

Table 20. Source-gate of M1 shorted

Component	Power Dissipation	Power Rating
R1	1.9 mW	3 W
R2	Negligible	0.125 W
R3	1.4 W	3 W
DZ1	Negligible	1 W
Q1	Negligible	1.2 W
M1	1.7 mW	75 W
I_{LOAD} = 63 μA for R_L = 0 W; I_{MAX} = 1A		
Breakdown voltages are not exceeded.		

Table 21. Emitter-base of Q1 shorted

Component	Power Dissipation	Power Rating	Power Rating Exceeds @
R1	Negligible	3Ω	---
R2	30 m Ω	125 m Ω	---
R3	0.18 Ω	3 Ω	---
DZ1	0.29 Ω	1 Ω	---
Q1	---	1.2 Ω	---
M1	1800 Ω	75 Ω	RL< 1.5 Ω
I_{LOAD} = 64 A for R_L = 0 Ω			
Breakdown voltages are not exceeded.			

An emitter-to-collector (E-C) short of Q1 eliminates the V_{SG} voltage differential on M1. With V_{SG} equal to zero, M1 does not conduct and no current flows to the load. Therefore, an E-C short is a safe failure condition. None of the breakdown voltages is exceeded in this case. Either an emitter-to-collector (E-C) open, or a base-to-collector (B-C) open failure mode is unsafe because feedback control is lost. With either the E-C or the B-C open and M1 fully on because of the bias circuitry, current would flow freely from the power supply to the load. The current into a shorted

load calculated for this failure mode was 22 A. The power rating of R1 was exceeded; a cascading failure of R1 would leave the circuit with no current limiting capability. Table 22 shows the results for this failure mode. A base-to-collector (B-C) short of Q1 is similar to the S-G short of M1, and the results given in Table 20 apply. A B-C short is a safe failure mode.

In the example circuit, an open circuit failure of DZ1 leads to a gate-to-source voltage of -28 V, which is more negative than is specified for this junction. The junction might withstand the additional stress, or it might fail. If it failed, control would be lost. A better circuit design would have values of R2 and R3, which did not lead to excessive bias on M1 in the event that DZ1 failed as an open circuit. A short circuit failure of DZ1 is equivalent to a S-G short at M1 or a B-C short at Q1. Because both of the latter lead to a fail safe condition, a short circuit failure at DZ1 also leads to a fail safe. Refer to Table 20 for simulation results.

Table 22. Emitter-collector and base collector of Q1 open

Component	Power Dissipation	Power Rating	Power Rating Exceeds @
R1	380 Ω	3 Ω	R_L< 13 Ω
R2	70 m Ω	125 m Ω	---
R3	3.9 m Ω	3 Ω	---
DZ1	Negligible	1 Ω	---
Q1	---	1.2 Ω	---
M1	250 Ω	75 Ω	R_L< 0.86 Ω
I_{LOAD} = 22 A for R_L = 0 W; I_{MAX} = 1A			
Breakdown voltages are not exceeded.			

A short circuit failure of R1 leaves the limiter without any current limiting capability. If the load has low resistance, the power ratings of M1 and R3 will be exceeded; thus, both will eventually fail. The calculated current into a shorted load was 64 A. If R1 is open, there is no path for the current to flow. Thus, R1 open results in safe failure condition.

A short circuit failure of R2 leads to a V_{SG} of zero volts. With V_{SG} equal to zero, M1 does not conduct and no current flows to the load. This is a safe failure condition. An open circuit failure of R2 gives the same results as the normal operation results. The load current for the R2 open circuit failure simulation was 1.098A as opposed to 1.097A for the normal operation. Thus, an R2 open failure is a safe failure mode.

If R3 is short circuited, the gate of M1 is connected directly to ground, and all feedback control of the output current is lost. Furthermore, because the current through D_{Z1} would not be limited, this component would overheat and burn out. If the load were also short circuited, the power ratings of R1, Q1, and M1 would be exceeded, and a cascade of failures would occur. The results of the simulation are tabulated in Table 23. An open circuit failure of R3 results in V_{SG} equal to zero volts; therefore, M1 does not conduct. Thus, an open circuit failure of R3 is a safe failure condition.

Table 24 gives a summary of the effects on the Type A limiter of different component failures.

Simulations were run for input voltages from 0 to 112 V dc for both a nominal load of 20 Ω and for a shorted load. Table 25 shows the power dissipation across each component at selected input voltages. Examination of this table shows that for VIN=56 V, the power rating of R3 was exceeded. For VIN equal to 84 V and 112 V, the power ratings of both R3 and M1 were exceeded. The breakdown voltages V_{SD} and V_{DG} for M1 were exceeded when V_{IN}> 84 V and V_{IN}> 88.4 V, respectively, for a nominal load of 20 Ω. For a shorted load, V_{SD} and V_{DG} were exceeded for V_{IN}> 59 V and V_{IN}> 54.7 V, respectively.

Table 23. R3 shorted

Component	Power Dissipation	Power Rating	Power Rating Exceeded @
R1	420 Ω	3 Ω	All values
R2	80 m Ω	125 m Ω	---
R3	---	3 Ω	---
DZ1	Negligible	1 Ω	---
Q1	610 Ω	1.2 Ω	All values
M1	260 Ω	75 Ω	R_L< 0.9 Ω
I_{LOAD} = 26 A for R_L = 0Ω; I_{MAX} = 1A			
Breakdown voltages V_{EB} & V_{SG} are exceeded for R_L<3.5 W & R_L> 1.68 W, respectively.			

Table 24. A summary of the effects of component failure on Type A

Failure Mode	Failure Type
Source-Drain of M1 Shorted	Catastrophic
Source-Drain of M1 Opened	Safe
Gate-Drain of M1 Shorted	Catastrophic
Gate-Drain of M1 Opened	Safe
Source-Gate of M1 Shorted	Safe
Emitter-Base of Q1 Shorted	Catastrophic
Emitter-Collector of Q1 Shorted	Safe
Emitter-Collector & Base-Collector of Q1 Opened	Catastrophic
DZ1 Opened	Safe
DZ1 Shorted	Safe
R1 Shorted	Catastrophic
R1 Opened	Safe
R2 Shorted	Safe
R2 Opened	Safe
R3 Shorted	Catastrophic
R3 Opened	Safe

Table 25. Power dissipation for varying input voltages

Component	Component Power Dissipation (Watts)				Power Ratings
	@28 V	@56 V	@84 V	@112 V	
R1	0.90	0.96	0.99	1.02	3
R2	2.8 m Ω	2.8 m Ω	2.8 m Ω	2.8 m Ω	0.13
R3	0.93	4.6	11.1	20.3	3
DZ1	---	---	---	---	1
Q1	0.21	0.471	0.741	1.011	1.2
M1	30	62.	96	130	75
I_{LOAD}	**1.097 A**	**1.130 A**	**1.150 A**	**1.166 A**	**1 A**
Breakdown Voltages	**None Exceed**	**None Exceeded**	**V_{DS} & V_{DG} Exceeded**	**V_{DS} & V_{DG} Exceeded**	---

Simulations were used to investigate the circuit's response to sudden changes in the load and to sudden changes in the input voltage. A very important factor in the transient response was the inductance of the load and of any wiring between the limiter and load. For the purposes of the simulations, it was assumed that there was a total inductance of 250 nH in the load and the wiring. This is the value that would be calculated for one foot of two-conductor cable if the conductors were parallel, had a diameter of 1 mm, and were separated by 4 mm. These values of diameter and separation are representative of those measured for typical interconnections.

The response of the circuit was simulated for the situation in which the load suddenly changed from 20 Ω to a short circuit. The significant part of the transient consisted of an over-shoot to about 1.1 A, which lasted for about 3 microseconds. The response of the circuit was simulated for the situation in which the nominal load of 20 Ω was suddenly replaced by an open circuit. None of the breakdown voltages was exceeded. Ringing was observed when the load was changed suddenly from an open circuit to a short circuit. Further studies showed that the example circuit would go into oscillation after sudden changes in the load if the parasitic inductance of the wires was more than about 500 nH. Simulations showed that if a shunt diode was placed across the 500 nH inductance, the circuit responded to changes in load without ringing.

The response of the circuit to sudden changes in the input power supply voltage was simulated. For the case in which V_{IN} was suddenly switched from 0 V to 28 V , the maximum over-shoot was to 1.25 A and it lasted for only 500 microseconds. When a sudden change in V_{IN} from 28 V to 0V was simulated, no large swings in current were observed for either the nominal load or a shorted load. The response of the circuit to surges in the input voltage was simulated.

The response to a surge to 56 V, which lasted for 1 microsecond was an increase in load current to 1.13 A. The current spike lasted for about 3 microseconds. A surge to 84 V produced a current spike to 1.15 A. The breakdown voltages $V_{GS(MAX)}$ and $V_{DS(MAX)}$ were exceeded for a surge to more than 84 V.

The Type A1 Limiter (similar to a limiter used in the QU2454 tester) A slightly modified version of the Type A circuit, designated as Type 1A, was built and tested. The circuit is shown in Figure 10. All of the components, except the shunt resistor and the power MOSFETs, were mounted on a printed circuit board (PCB). The shunt resistor was mounted separately, and the parallel MOSFETs were mounted on heat sinks. The shunt resistor,R_{SH}, was a parallel combination of power resistors. Three p-channel power MOSFETs were connected in parallel to avoid excessive heating of a single device, and so that data on power sharing could be obtained. The circuit is similar to, but not identical to, a current limiting circuit used in the QU2454, a tester at Sandia's Weapon Evaluation and Test Laboratory.

The approximate expression for the limit current, I_{MAX}, is

$$I_{MAX} = V_{EB(Q1)}[1 + (R_1+R_2)/ R_{SH}]/R1 \qquad (11)$$

Type A1 circuits were designed for VIN = 28 V and for I_{MAX}= 1A, 5A, 7A, and 10A. Table 26 shows the values and part numbers of the components for the 1 A and 10 A designs. A nominal load of 0.44 Ω was used in all experiments to ensure that the limiters operated in the limiting mode. Tests were conducted with the entire circuit out in the laboratory, and with all or part of the circuit in an oven. Device temperatures were measured with a Fluke Universal Temperature Probe 80T-150U and the oven temperature was monitored using a Fluke Air Probe 80PK-4A Type K Thermocouple. A Fluke Thermocouple Module 80TK provided the interface between these probes and either a Cirkit TM5365 or a Keithley 168 digital multi-meter.

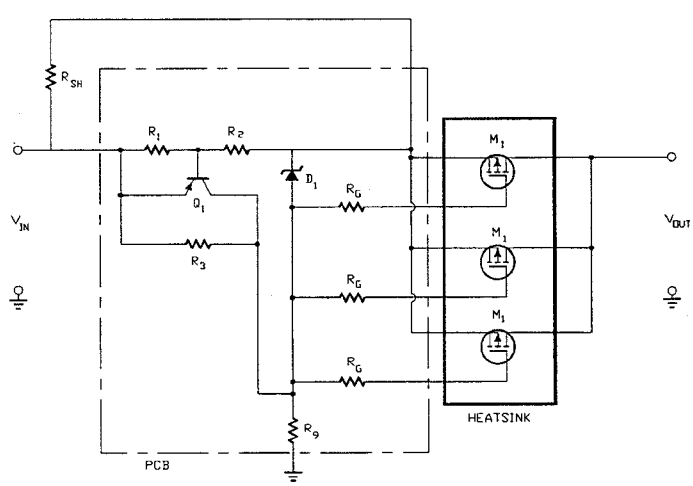

Figure 10. The circuit of the Type A1 limiter

Table 26. Type A1 component values

Component	Type	1A Design	10A Design
R_1	Resistor	30 kΩ	6.2 kΩ
R_2	Resistor	22 kΩ	47 kΩ
R_3	Resistor	51 kΩ	51 kΩ
R_9	Resistor	20 kΩ	20 kΩ
R_{SH}	Power Resistor	0.81 Ω	0.66 Ω
R_G	Resistor	470 Ω	470 Ω
Q_1	PNP BJT	2N2905	2N2905
M_1, M_2 & M_3	Power MOSFETs	IRF9141	IRF9141
D_1	Zener Diode	1N4883	1N4883
V_{IN}	Power Supply	28V	28V

The circuit was allowed to operate at room temperature for about 20 minutes and then the temperature of each component was measured. Table 27 shows the results. Significant temperature increases were observed for the power MOSFETs and the shunt resistor for currents higher than 5A. These observations suggest that more parallel MOSFETs and resistors with higher power ratings would be required for safe operation at 7 A and 10 A (or different heat sinks might be used to better dissipate the heat). The data in Table 27 show that the temperatures of the components on the PCB remained close to room temperature; this was the expected result.

Type A1 limiters were operated in an oven so the current limiting behavior of the circuit could be observed for circuit temperatures above ambient. For some tests, the entire Type A1 circuit was placed in the oven, and the current limiting behavior was observed as the oven temperature was increased to 200°C. For other tests, one of the three main parts of the limiter, that is the PCB, the MOSFETs, or the shunt resistor, was heated separately, while the remaining main parts were kept at room temperature. The latter tests were done to determine whether a temperature differential could lead to unsafe operation of the circuit.

Table 28 shows the results obtained when the entire circuit for the 1A and 10A designs was placed in the oven. The results show that as the oven temperature increased, the value of the load current decreased. This can be explained in part by the fact that V_{EB} in Equation 11 has a negative temperature coefficient. At temperatures above 150°C, oscillations in the load current were observed.

Table 27. Temperature of Type A1 components

Component	Temp °C 1A Design	Temp °C 5A Design	Temp °C 7A Design	Temp °C 10A Design
R_1	25	25	25	25
R_2	25	25	25	25
R_3	25	25	25	25
R_9	25	25	25	25
R_{SH}	36	125	150+	150+
R_{GS}	25	25	25	25
Q_1	25	25	25	25
M_1	75	125	133	139
M_2	52	96	95	106
M_3	44	96	102	113
D_1	25	25	25	25
The highlighted items show significant heating of the components.				

Table 28. Results from elevated temperature testing of entire Type A1 circuit

T °C	I_{LOAD} 1A Design	I_{LOAD} 10A Design	T °C	I_{LOAD} 1A Design	I_{LOAD} 10A Design	T °C	I_{LOAD} 1A Design	I_{LOAD} 10A Design
25	1.01	10.66	85	0.816	8.594	145	0.612	6.449
30	0.989	10.41	90	0.800	8.425	150	0.594	6.254
35	0.965	10.16	95	0.784	8.256	155	0.573	6.032
40	0.953	10.03	100	0.767	8.074	160	0.552	5.811
45	0.936	9.855	105	0.751	7.905	165	0.525	5.525
50	0.920	9.686	110	0.736	7.749	170	0.502	fail
55	0.906	9.543	115	0.718	7.567	175	0.474	"
60	0.893	9.400	120	0.701	7.385	180	0.442	"
65	0.875	9.218	125	0.685	7.216	185	0.406	"
70	0.862	9.075	130	0.668	7.034	190	0.368	"
75	0.844	8.893	135	0.651	6.852	195	0.324	"
80	0.830	8.737	140	0.632	6.657	200	0.264	"

The results were obtained when the PCB was placed inside the oven, but the shunt resistor and the power MOSFETs were kept outside at room temperature are shown in Table 29. Oscillatory behavior was observed at temperatures above 150°C. When oscillations occurred, the load voltage varied from 0.3 volts to 0.9 volts at a frequency between 3.3 Hz to 3.5 Hz. The waveform resembled a sawtooth. The low frequency suggests that the oscillations were due to some thermal-electronic interaction.

Table 30 shows the results obtained when only the MOSFETs were placed inside the oven. It is seen that the load current did not change much with increase in the temperature. However, when the oven temperature went beyond 150°C, some of the MOSFETs failed as short circuits and all of the current limiting capability was lost. The operating temperature at which failure occurred is essentially the same as the maximum rated use temperature of 150 C given for the IRF9140 power PMOSFETs.

Table 29. Results from tests in which only the Type A1 printed circuit board was heated

T °C	I_{LOAD} 1A Design	I_{LOAD} 10A Design	T °C	I_{LOAD} 1A Design	I_{LOAD} 10A Design	T °C	I_{LOAD} 1A Design	I_{LOAD} 10A Design
25	1.01	10.4	85	0.647	8.43	145	0.491	6.25
30	0.803	10.2	90	0.633	8.26	150	0.481	6.03
35	0.788	10.0	95	0.621	8.07	155	fail	5.81
40	0.774	9.86	100	0.609	7.91	160		5.53
45	0.761	9.69	105	0.597	7.75	165		5.29
50	0.747	9.54	110	0.583	7.57	170		fail
55	0.733	9.40	115	0.570	7.39	175		
60	0.720	9.22	120	0.558	7.22	180		
65	0.702	9.08	125	0.545	7.03	185		
70	0.687	8.89	130	0.531	6.85	190		
75	0.673	8.74	135	0.517	6.66	195		
80	0.660	8.59	140	0.503	6.45	200		

Table 30. Results obtained when only the MOSFETs in the Type A1 limiter were heated

T °C	I_{LOAD} 1A Design	I_{LOAD} 10A Design
25	1.01	10.4
50	1.01	10.4
65	0.995	10.4
70	0.995	10.4
85	0.995	10.3
115	0.993	10.4
120	0.990	10.4
130	0.988	10.4
135	0.987	failed
140	0.990	failed
145	0.991	failed
150	0.995	
155	failed	

The circuit was exposed to pulses of 28V of various durations so that the effects of turning on and turning off power could be observed. No significant over shoots or oscillations were observed. The circuit was subjected to over-voltages of up to 60V. The current limiting capability was not effected, but in some instances the pass MOSFETs failed as short circuits after a short time of continuous operation. This shows that over voltage protection is required for safe and reliable operation of the circuit.

More discussion of the results and data are found in Section 7.

6.2 Analysis of the Type-B Limiter

The Type-B current limiter circuit schematic is shown below.

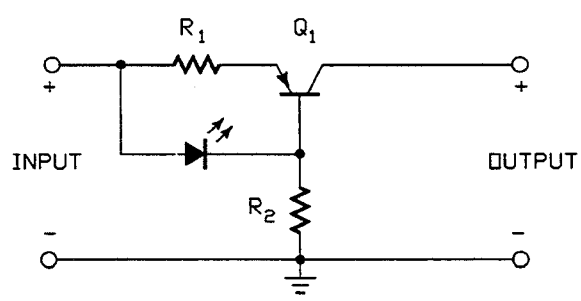

Figure 11. The basic Type B regulator

It consists of two resistors, R1 and R2, a pnp transistor, Q1, and a light emitting diode, D1. The circuit will limit the output current to a value I_{lim} given by

$$I_{lim} = (V_{D1} - V_{EB})/R1, \tag{12}$$

in which V_{D1} is the "turn on voltage" for the light emitting diode (approximately 1.4 volts) and V_{EB} is the "turn on voltage" for the emitter-base junction of the bipolar transistor (approximately 0.75 volts). Under normal (not limiting) operating conditions, Q1 is biased into saturation and the base current in the transistor is determined from the relation

$$I_b = (V_{in}-V_{R1}-V_{EB})/R2. \tag{13}$$

V_{EB} will not be larger than about 0.75 V and VR1 will not be larger than about 1.4 V which is the turn on voltage for the light emitting diode. If V_{in} is 28 V or larger it is reasonable to write

$$I_b \approx V_{in}/R2. \tag{14}$$

The collector current, which is equal to the current to the load, will be approximately equal to the *smallest* of the following three quantities (R_L is the resistance of the load):

1. $(V_{in} - VEC_{sat})/(R1 + R_L)$ (15)
2. I_{lim} (16)
3. $\beta \times I_b$ (17)

V_{ECsat} in Eq.(15) is the collector to emitter saturation voltage for Q1; it is normally about 0.4 V. The value of β for Eq. (17) is chosen so that the equation

$$I_c = \beta \times I_b \tag{18}$$

provides a reasonably accurate description of the relation between I_c and I_b for values of I_c near I_{lim}. If the circuit has been designed properly, the value in Eq. (15) will be the smallest of the values and the value in Eq. (17) will be the largest. Under normal operating conditions, the current should be determined by the supply voltage and the load resistance, that is, it should be determined by Eq.(15). If the load resistance is so small that the current would be larger than I_{lim}, then the current should be limited to I_{lim}. If the circuit has been properly designed, there should be enough base current, I_b, to support a collector current of at least I_{lim}, that is, the current determined from Eq. (17) should be larger than that determined from Eq. (16).

If the output current approaches I_{lim}, significant current will start to flow through the light emitting diode. This current will add to the base current that is already flowing through R2. The increased current through R2 will result in an increased voltage drop across this resistor. More

voltage drop across R2 means less voltage available to forward bias the emitter-base junction of the transistor. Because of the exponential relation between junction voltage and junction current, a small decrease in junction voltage will result in a large decrease in junction current.

It is instructive, but somewhat artificial, to separate the circuit in Figure 11 into the control, sense, gain and feedback components of a classic feedback control system. The bipolar transistor is the control element, the light emitting diode is the sense element, the exponential relationship between junction voltage and junction current provides gain, and the feedback occurs in R2. More information on the design of Type B limiters is given in Appendix B.

A Type-B current limiter was designed for 28 V operation with I_{lim} equal to 1A. PSpice simulations were run for the component values and part numbers shown in Table 31. The limiting voltages for the two semiconductor devices, as given in the data sheets, are

Q1: $V_{CE(MAX)}$= 80V; $V_{CB(MAX)}$= 80V; $V_{EB(MAX)}$= 6V

D1: $V_{D(MAX)}$= 3V (reverse)

Table 31. Type-B component values for I_{lim} = 1A

Component	Type	Value/Part No.
R1	Resistor	0.75 Ω
R2	Resistor	500 Ω
Q1	PNP BJT	2N6187
D1	Light-Emitting Diode (LED)	LN28RP
Vin	Power Supply	28V DC

Table 32. shows the power dissipation in each component of the Type-B limiter for Vin equal to 28 V and RL a short circuit.

Table 32. Type-B component power dissipation for shorted output

Component	Power Dissipation	Power Rating
R1	600 mW	3 W
R2	1.39 W	3 W
Q1 (2N6187)	24 W	65 W
D1 (LN28RP)	77 mW	135 mW

In the Type-B limiter, the pnp transistor, Q1, is a critical component because an emitter-to-collector (E-C) short or base-to-collector (B-C) short leads to an unsafe condition. If the emitter and collector of Q1 are shorted together, the output current is only limited by the resistance of R1. If R1 were to also fail as a short circuit, the current would only be limited by the internal resistance of the power supply The results from a simulation of an emitter-to-collector short are given in Table 33.

Table 33. Emitter-collector of Q1 shorted

Component	Power Dissipation	Power Rating	Power Rating Exceeded @
R1	1120 W	3 W	R_L< 13.2 W
R2	1.8 W	3 W	---
Q1	---	65 W	---
D1	110 mW	0.135 W	---
I_{LOAD} = 45 A for R_L = 0 Ω;			

An E-C open is a safe failure mode as long as the base-collector junction is not shorted. A base-collector short is catastrophic as the power supply has a path through D1 to the load. If D1 also failed as a short circuit, the output current would only be limited by the internal resistance of the power supply. As is shown in Table 34, a load current of 30 A was calculated when a base-collector short was simulated.

Table 34. Base-collector of Q1 shorted

Component	Power Dissipation	Power Rating	Power Rating Exceeds @
R1	1.45	3 W	---
R2	1.33 W	3 W	---
Q1	1.6 W	65.00 W	---
D1	114 mW	125 mW	R_L< 32.6Ω
I_{LOAD} = 30 A for R_L = 0 Ω			

A base-to-collector (B-C) open failure is a safe failure condition given that the E-C has not failed as a short circuit. An E-B short is a safe failure mode as long as neither the E-C nor the B-C junction is shorted. An E-B open is also a safe failure mode provided that neither the E-C nor the B-C junctions are shorted.

As shown in Table 35, a short circuit around R1 resulted in an unsafe failure of the example circuit because the power ratings of components were exceeded. An open circuit failure of R1 is a safe failure mode as long as the B-C junction of Q1 is not shorted.

Table 35. R1 shorted

Component	Power Dissipation	Power Rating
R1	---	3 W
R2	4.4 W	3 W
Q1	100 W	65.00 W
D1	27 mW	0.135 W
$I_{LOAD} = 3.6$ A		

If R2 is short circuited, the base current in Q1 and the current through D1 will become very large, and, most likely, Q1 and D1 will over heat and burn out. If D1 fails as a short circuit, the power supply will be isolated from the load. However, if D1 fails as an open circuit and Q1 fails as a short circuit, the output current will be limited only by the internal resistance of the power supply and the resistance of R1. An open circuit failure of R2 is a fail safe mode. The base of Q1 is disconnected from the ground when R2 is open; therefore, no current flows through Q1 to the load.

D1 supplies current to R2 if the sum of the voltages across R1 and the emitter-base junction of Q1 becomes as large as the turn-on (sometimes call "knee") voltage of this diode. If there is a short circuit around D1, no base current and, therefore, no collector current will flow in Q1, and no current will flow in the load. Hence, a short circuit failure of D1 is a safe failure.

An open circuit failure of D1 eliminates feedback control of the output current, but, depending on the value of R2, such a failure may not result in very large output currents. It was stated at the beginning of this section that the output current will always be the smallest of the values given by Equations (15) through (17). If D1 is an open circuit, the output current will be limited to the value determined by Eq. (17). If the circuit has been properly designed, this value should not be much larger than the value given by Eq. (16). Table 36 gives a summary of the different failure modes.

Table 36. Summary of component failures

No.	Component Failure Type	Failure Mode
1	Emitter-Collector of Q1 Shorted	Unsafe
2	Emitter-Collector of Q1 Opened	Safe
3	Base-Collector of Q1 Shorted	Unsafe
4	D1 Short and B-C of Q1 short	Unsafe
5	Base-Collector of Q1 Open	Safe
6	Emitter-Collector of Q1 Shorted	Unsafe
7	Emitter-Base of Q1 Opened	Safe
8	R1 Shorted	Unsafe
9	R1 Opened	Safe
10	R2 Shorted	Unsafe
11	R2 Opened	Safe
12	D1 Shorted	Safe
13	D1 Opened	Unsafe

To evaluate the effects of different input voltages, simulations were run for input voltages up to 112 V dc (that is, four times the nominal Vin of 28 V dc). Simulations were run for a nominal load of 20 Ω and for a shorted output. Table 37 shows the load current, I_{LOAD}, and the power dissipation across each component for different input voltages. For VIN = 56 V, the power rating of R2 was exceeded and for VIN = 84 V the dissipation rating of Q1 was also exceeded. Therefore, if there is a chance that the power supply voltage could increase, components with higher dissipation ratings should be chosen (the installation of heat sinks could also be considered). For V_{IN} equal to 84 V and 112 V, the power ratings of most components were exceeded. The breakdown voltages $V_{CE(MAX)}$ and $V_{CB(MAX)}$ were exceeded for a shorted load for VIN> 80 V and VIN> 81 V, respectively. $V_{CE(MAX)}$ and $V_{CB(MAX)}$ were exceeded for V_{IN}> 103 V and V_{IN}> 104 V, respectively for a 20-Ω load.

The response of the circuit to sudden changes from the nominal 20 Ω load to a short circuit or an open circuit were simulated. For all of the simulations it was assumed that the there was an inductance of 250 nH in series with the load (even if the load was a short circuit). The response to a change from the nominal load to a short circuit was a transient increase in current to about 103.3 % of the nominal value. The transient lasted for about 200 microseconds. A change in load resistance from 20 Ω to an open circuit resulted in a small transient that decayed in about 18 microseconds. None of the breakdown voltages was exceeded. The response of the circuit was simulated for a change from an open circuit condition at the output to a short circuit condition. According to the simulation, the current overshot to 1.3 A., and about 21 microseconds elapsed until the current to reached the steady-state value of 1.0 A.

Table 37. Power dissipation for various input voltages with the load shorted

Component	Component Power Dissipation (Watts)				Power Ratings (Watts)
	@28V	@56V	@84V	@112V	
R1	0.5	0.7	0.9	1.1	3
R2	1.4	5.9	14	29	3
Q1	22	52	89	147	65.00
D1	0.1	0.2	0.3	0.5	1
I_{LOAD}	0.8 A	0.9 A	1.1 A	1.2 A	1.0 A DESIGNED VALUE
Breakdown Voltages	Not Exceeded	Not Exceeded	V_{CB} Exceeded	V_{CB} Exceeded	---

Sudden changes in the input voltage were also simulated. According to the simulations, when Vin was switched from 0 V to 28 V for a load of 20 Ω, the transient in the load current took about 6 microseconds to decay. The maximum overshoot was to 1.14 A. Similar results were obtained for a shorted load except that the over-shoot was to 1.4 A, and the circuit reached steady-state in about 2 microseconds. None of the breakdown voltages was exceeded for either load. The response of the circuit to 1-microsecond-long surges in the input voltage was simulated. The response to a surge to 56V was a spike that reached 1.52 A and lasted for about 2.4 μs. None of the breakdown voltages was exceeded for this surge. More discussion of the Type B limiter and of the results just given is located in Section 7.

6.3 Type C Limiter

No significant work was done on this type of limiter.

6.4 Type D Limiter

The Type D current limiter circuit schematic is shown in Figure 12. It consists of three resistors, R1, R2 and R3, an npn transistor, Q1, and a silicon controlled rectifier, SCR.

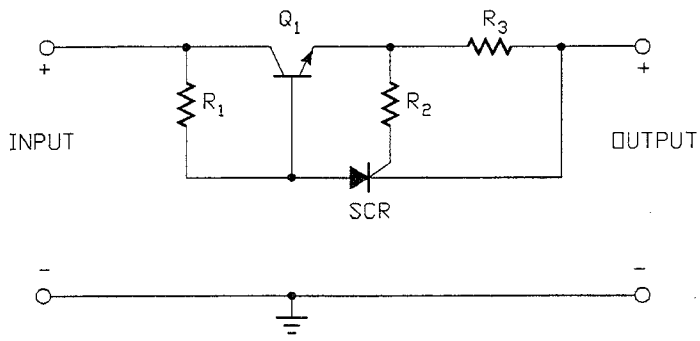

Figure 12. The circuit for the Type D limiter

In the Type D circuit shown, the resistor R1 limits the current through the SCR once the SCR is turned on. The SCR has three terminals called the anode, the cathode, and the gate; these terminals are commonly assigned the letters A, G, and K. This convention is followed in this report. Resistors R2 and R3 determine the output current value at which the SCR is turned on. The value of R3 is chosen so that when the load current I_{LOAD} reaches the value I_{MAX}, the voltage drop across R3 is large enough to turn on the SCR. The voltage across R3 is determined from Kirchoff's voltage law, that is,

$$I_{R3} \times R3 = I_{Gate} \times R2 + V_{GK} \tag{19}$$

in which I_{R3} is current through resistor R3, I_{Gate} is the current through R2 to the gate of the SCR and V_{GK} is the voltage between the gate and the cathode of the SCR. The exact values of I_{Gate} and V_{GK} at which the SCR turns on depend on the SCR and on the temperature. The values of I_{Gate} and V_{GK} at which the SCR turns on are commonly referred to as I_{GT} and V_{GT}. Typical values for these quantities at room temperature are about 1 mA and 0.8 V, respectively. For most SCRs both I_{GT} and V_{GT} decrease as the temperature increases. Hence, as shown in Eq. (19), the current I_{R3} at which the SCR turns on will depend on temperature. The circuit designer will have to determine whether this temperature dependence can be kept within acceptable limits.

The Type D limiter wastes a relatively large amount of power because the npn transistor is not driven into saturation under normal operating conditions. In fact, the voltage, V_L, available to the load is given by the equation

$$V_L = V_{in} - I_L \times (R1 / (1 + \beta) + R3) - V_{BE} \tag{20}$$

in which V_{in} is the supply voltage, I_L is the current to the load, V_{BE} is the base to emitter voltage of the npn transistor, and β is the large signal gain of this transistor (that is, at the chosen operating point, $I_L = \beta \times I_{BE}$, in which I_{BE} is the base to emitter current). In the sample design which is discussed below, R1 is 1000 ohms and R3 is 6.9 ohms. Suppose β is 100, V_{BE} is 0.8 V, and the load current is 200 mA. Then the voltage to the load will be about 4.2 V less than the supply voltage. The circuit designer must decide whether this much loss in the limiter is acceptable.

When the current through R3 becomes large enough, the SCR turns on and current will flow through both the transistor and the SCR. The current, I_L , to the load is given, approximately, by

$$I_L \approx (V_{in} - V_{AK}) / R1 + (V_{AK} - V_{BE}) / R3 \tag{21}$$

in which V_{SCR} is the voltage across the turned on SCR. The equation does not take into account the voltage drop in R1 due to the base current of the transistor.

A Type D current limiter was designed so that the SCR would turn on when I_L reached 280 mA (referred to as I_{Max} in the tables and text that follow), so that the current into a shorted load would be 62 mA. There was no particular reason for choosing these values. Both are for an input voltage of 28 V. Component values and part numbers for the sample circuit are shown in Table 38. Note that the component values were chosen so that the effects of component failure would be clear rather than because the example would illustrate good design practice. For example, good design practice would most likely lead to a much smaller value for R2 to reduce the dependence of the maximum current on the current reauired to trigger the SCR. Maximum ratings for the npn transistor and the SCR are

npn: $V_{CE(MAX)}$= 400V; $V_{CB(MAX)}$= 400V; $V_{EB(MAX)}$= 5V, P_{max} = 100 W,

SCR: $V_{AK(FWD\ MAX)}$= 60V; $V_{AK(REV\ MAX)}$= 60V; $V_{G(MAX)}$= 4V

(A denotes the anode, K denotes the cathode, G denotes the gate).

Table 38. Type-D limiter component values

Component	Type	Value/Part No.
R1	Resistor	1.0 kΩ
R2	Resistor	4.3 kΩ
R3	Resistor	6.8 Ω
SCR	Silicon Controlled Rectifier	MCR103
Q1	npn Transistor	2N3902
Vin	Power Supply	28V dc
I_{MAX} = 290 mA; I_{hold} = 62 mA		

Table 39. shows the power dissipation in each component for Vin equal to 28 V and the load shorted.

Table 39. Component power dissipation for shorted output, Type D limiter

Component	Worst Case Power Dissipation	Power Rating
R1 (1%)	0.7 W	3 W
R2 (1%)	Negligible	3 W
R3 (1%)	0.01 W	3 W
SCR (MCR103)	0.03 W	48 W
Q1 (2N3902)	1.0 W	100 W

If R1 fails as a short circuit, the current to the load is limited only by the internal impedance of the supply, the effective internal resistance of the SCR, and the impedance of the load. Therefore, a short circuit at R1 results in an unsafe failure of the limiter. The results from a simulation of this failure are shown in Table 40. An open circuit of R1 is a safe failure mode because there would be no base current to Q1, and this transistor would not conduct any current to the load.

Table 40. Resistor R1 shorted

Component	Power Dissipation	Power Rating
R1	---	3 W
R2	0.1 W	3 W
R3	79 W	3 W
Q1	15 W	100 W
SCR	442 W	48W
I_L = 19 A		

A short circuit failure of R2 is a safe failure mode because the SCR will turn on before IMAX is reached. The results obtained from a simulation of this failure are shown in Table 41. If R2 fails as an open circuit, the SCR never turns *ON*. Hence, this failure mode results in an unsafe failure of the limiter.

A short circuit failure of R3 results in an unsafe failure of the limiter. The results from a simulation of this failure are shown in Table 42. An open circuit failure of R3 is a safe failure mode because the load is isolated from the power supply.

Table 41. Resistor R2 shorted

Component	Power Dissipation	Power Rating
R1	0.7 W	3 W
R2	---	3 W
R3	0.01 W	3 W
Q1	1.0 W	100 W
SCR	0.03 W	48.00 W
I_L = 64 mA; I_{CLAMP} = 62 mA		
Breakdown voltages are not exceeded		

Table 42. Resistor R3 shorted

Component	Power Dissipation	Power Rating
R1	0.7 W	3 W
R2	Negligible	3 W
R3	---	3 W
Q1	27 W	100 W
SCR	Negligible	48W
I_{RL} = 1.0 A		

An anode-to-cathode short at the SCR results in a safe failure of the limiter, provided R1 is not short circuited also. An anode-to-cathode open circuit at the SCR results in an unsafe failure of the limiter. An anode-to-cathode short circuit results in a safe failure because the SCR is essentially turned on all the time. If the cathode and gate of the SCR are shorted together, the SCR will not turn on. This will result in an unsafe failure of the limiter.

It is difficult to predict the consequences of an anode-to-gate short or open at the SCR. If the only failure at the SCR were an anode-to-gate short, the SCR would be turned on whenever an voltage of more than about 0.8 V was applied between the anode and cathode. Such behavior would result a safe failure of the limiter. However, it is much more likely that an anode-to-gate short would be accompanied by other failures within the SCR. The consequences of an anode-to-gate open circuit are also difficult to predict. There is high impedance between the gate and the anode of a properly functioning SCR. The most likely causes of an open circuit, rather than just high impedance, are an open anode lead or an open gate lead. Either of these faults would lead to

unsafe failure of the limiter. Because it is not possible to confidently predict the effects of anode-to-gate failures, the authors assert such failures must be shown as leading to unsafe failure of the limiter.

The transistor is also an essential component of the limiter. An emitter-to-collector short results in an unsafe failure because, after such a short, the current is limited only by R3. There could also be some current through the SCR, which could be turned on. However, if R1 were much larger than R3, the current through the SCR would not add much to the current through R3. An emitter-to-collector open of Q1 is a safe failure mode because no current flows to the load.

If the only flaw in the transistor is an emitter-to-base short circuit, the transistor will not conduct current and the current to the load will be limited to V_{in} /(R1+R3). If R1 is relatively large, this current will be less than the nominal current. Hence, an emitter-to-base short results in a safe failure mode. The results of simulating this fault are shown in Table 43. The results could be quite different if the emitter-to-base short were accompanied by other faults. An emitter-to-base open, by itself, results in a safe failure mode because the transistor never turns on and no current flows to the load.

If the collector and base short together, but the transistor continues to function, the situation is the same as that of a short across R1. It is shown above that such a short results in an unsafe failure of the limiter. If, as a result of the collector-to-base short, the transistor does not carry current between the collector and emitter, the load is isolated from the supply, and the short results in a safe failure. Because in a safety analysis, it is reasonable to assume that the most damaging situation might occur, it is concluded that a collector-to-base short would result in an unsafe failure of the limiter. The most likely cause of an open circuit between the collector and the base is an open base lead or an open collector lead. If either of these leads is open, no current will flow through the transistor. Therefore, an open circuit between the base and collector most likely leads to a safe failure condition.

Table 43. Emitter-to-base short of Q1

Component	Power Dissipation	Power Rating
R1	0.8 W	3 W
R2	Negligible	3 W
R3	6 mW	3 W
Q1	---	100 W
SCR	Negligible	48 W
I_{RL} = 28 mA		
Breakdown voltages were not exceeded		

Table 44 gives a summary of the different failure modes.

Table 44. Summary of component failures

No.	Component Failure Type	Failure Mode
1	R1 Shorted	Unsafe
2	R1 Opened	Safe
3	R2 Shorted	Safe
4	R2 Opened	Unsafe
5	R3 Shorted	Unsafe
6	R3 Opened	Safe
7	Anode-Cathode of SCR Shorted	Safe
8	Anode-Cathode of SCR Opened	Unsafe
9	Anode-Gate of SCR Shorted	Unsafe
10	Anode-Gate of SCR Opened	Unsafe
11	Gate-Cathode of SCR Shorted	Unsafe
12	Emitter-Collector of Q1 Shorted	Unsafe
13	Emitter-Collector of Q1 Opened	Safe
14	Emitter-Base of Q1 Shorted	Safe
15	Emitter-Base of Q1 Opened	Safe
16	Collector-Base of Q1 Shorted	Unsafe
17	Collector-Base of Q1 Opened	Safe

Simulations were run for input voltages up to 112 V dc, that is, to four times the nominal Vin of 28 V dc, to determine the effects of variation in the input voltage. For this set of simulations, the load was a short circuit. Table 45 shows the power dissipation in each component for different input voltages. It is clear from the results that when the input voltage is doubled to 56 V, the power rating of R1 is exceeded. Therefore, if there is a chance the input voltage will be as large as 56 V, a higher power rating resistor should be selected. According to the simulation results, the power rating of no other component was exceeded for input voltages up to 112 V.

Table 45. Power dissipation for a short circuit load and various input voltages

Component	Component Power Dissipation (Watts)				Power Ratings (Watts)
	@28V	@56V	@84V	@112V	
R1	0.7	3.0	6.9	12.3	3
R2	---	---	---	---	3
R3	0.01	0.01	0.02	0.03	3
Q1	1.0	2.6	4.6	7.0	100
SCR	0.03	0.06	0.09	0.13	48
Breakdown Voltages	Not Exceeded	Not Exceeded	Not Eceeded	Not Exceeded	---

Simulations were run to determine the response of the limiter to sudden changes in the load, and to sudden changes in the input voltage. For the simulations, it was assumed that the load included an inductance of 250 nH. The response of the circuit was observed when a nominal load of 220 Ω was suddenly replaced by a short. From plots of transient response, it was determined that the current would overshoot to about 830 mA before settling to 62 mA in about 130 μs. Simulations were run to determine the response of the circuit when a nominal load of 220 Ω was suddenly replaced by an open circuit. It was determined that only about 30 μs elapsed before the current reduced to zero after switching to the high impedance load. Finally, the response of the circuit was observed when an open circuit at the output was suddenly changed to a short circuit. The response included a spike to 830 mA that lasted for about 100 μs. The output current reached the steady state value of 62 mA in about 130 μs.

The circuit's response to a sudden switching of the input power supply from 0 V to 28 V with R_{LOAD} = 220 Ω was simulated. Plots of the response showed a steady rise of the load current without any ringing or over-shoot. In about 2 μs, the current reached its steady-value of 115 mA. The circuits response was simulated for a sudden change in Vin from 28 V to 0 V for R_{LOAD}= 220 Ω and R_{LOAD} .= 0 Ω. According to the simulations, the load current decreased to zero in about 1 microsecond. No voltage over shoots at the load were observed. The response of the circuit to surges in the input voltage was also simulated. The response to a 1-microsecond-long surge to 56 V was a spike, which lasted for about 3 μs.

Additional discussion of the Type D limiter and of the simulation results are found in the next section.

7. Discussion

There is no single best limiter. Limiter selection must be derived from a balance between system requirements and limiter characteristics. Requirements and characteristics that should be considered include voltage of the source, the energy available from the source, the maximum acceptable time interval between the onset of over current and the onset of effective limiting, the maximum acceptable fault current, the amount of power that can be dissipated in the limiter during normal conditions, the maximum acceptable voltage drop across the limiter, required reliability for limiting, abnormal electrical and thermal environments that the limiter must tolerate, tolerance to turn-on and turn-off transients, space available for the limiter, and cost. The list is not exhaustive. These requirements and how they might affect the choice of a limiter are discussed below.

Most test systems at Pantex are powered from a battery pack and many of the battery packs operate at about 28 V. All of the battery packs now in use could provide enough energy to seriously damage a nuclear explosive.

Table 1 shows the relation among magnitude of over current, duration of over current, and consequences. It is seen in this table that a current of a few hundred amperes that lasts for only about a microsecond could in principle fire a main charge detonator. The simulation results given in Sections 3 and 4 show that current spikes could be expected to last for a few microseconds after a sudden change from a nominal load to a short circuit. The response of actual limiters would be slower than indicated by the simulation results because of stray inductance and capacitance that were not fully accounted for in the simulations. It is necessary to conclude that none of limiters could be depended on to prevent a microsecond long transient that could fire a detonator. The only way to ensure that such a transient does not occur is to use a battery pack that could not produce hundreds of amperes of short circuit current.

The simulation results show that the Type A, Type B, and Type C limiters discussed in Section 4 could respond to a short at the load and limit the current to safe levels in tens to hundreds of microseconds. This means that any of these limiters could be used to prevent the charging of a fire set, and possibly to prevent the firing of electro-explosive devices. The relation between firing current and firing time for electro-explosive devices is complex and is beyond the scope of this report. If it is of concern for a particular tester, the designer must determine whether the response of the limiters under consideration will be fast enough to provide adequate protection.

Response time is not an issue for the resistive limiters discussed in Section 5. Such limiters permanently limit the current available. However, as discussed in Section 5, resistive limiters generally can be used only on lines that carry nominal currents that do not exceed a few tens of milliamperes.

The voltage drop across a current limiter and the power dissipated in the limiter during normal operations must be acceptably small. Sometimes the requirement for low voltage drop will determine the choice of limiter. For example, a fuse blower was the only type of limiter that met a requirement on the UA5088, which specified that the insertion voltage drop could not

exceed a few tenths of a volt. Power dissipation during normal operation is a concern for a battery powered tester. A desire to put the smallest amount of electrical energy that will get the job done near a nuclear explosive dictates the selection of the smallest battery that will provide a reasonable interval of use between re-charge cycles. Inefficient current limiters will lead to the use of a larger battery than is necessary. Larger batteries will lead to the use of a limiter with a higher energy rating because the limiter must be able to safely discharge a fully charged battery. Most likely a limiter with a higher energy rating will likely occupy more space and weigh more than a limiter with a lower rating. In other words, the choice of an inefficient limiter can cause a ripple through the design of an entire tester. It was pointed out in Section 6.4 that the type D limiter is not particularly efficient because the npn transistor is not driven into saturation. Therefore, this limiter is a poor choice when power dissipation is important.

All of the limiters, even resistors, can fail to provide limiting. Failure modes and effects for the various limiters are discussed in detail in Sections 6 and 7, and in Appendix A. All of the limiters, except the resistor limiter with two resistors, are vulnerable to single point failures. That is to say, a failure of a single component can lead to an unsafe failure of the limiter. For example, if the SCR in the fuse blower fails as an open circuit, the limiter will not provide protection. In the case of the Type A limiter, the limiter will be unsafe if the MOSFET transistor fails as a short circuit. Many other single point failure modes can be determined from the various tables that show the results of the FMEA work. Thoughtful design can sometimes eliminate one or more single point failures. For example, the use of two parallel-connected SCRs could eliminate the single point failure associated with failure of the SCR in a fuse blower. During the design review process, the designer must show how single point failures have been dealt with, and that the proposed design will provide reliable protection.

The designer must also show that he has considered abnormal environments that the tester might experience, which may include high temperature, high voltage, shock, vibration, deluge of water, and fire fighting chemicals. The stresses may be presented singly or in combination. Detailed information about the credible abnormal environments at various locations at Pantex can be obtained from the Pantex nuclear explosive safety organization. Data were presented in Section IV and Section VI on the response of various limiters to elevated temperature, to above normal power source voltage, and to combinations of high temperature and high voltage. Data were also presented regarding the response of the fuse blower and of the Type A circuit to differential heating; that is, to heating which caused parts of the limiter to be at different temperatures. The designer should arrange circuit components so that a limiter has the safest possible response to abnormal heating. Normally, this would mean that current from the limiter decreased, or at least did not increase, in response to credible abnormal heating.

Turn-on and, to a lesser extent, turn-off transients can be a challenge to the designer for any limiter that latches into some low current state when an over current is sensed. The fuse blower, which latches into a zero current state, is an extreme case of such a limiter. The Type D limiter is another example. If a turn-on transient activates such a limiter, the protective action of the limiter will come into effect before the equipment becomes fully functional. To overcome this problem, designers frequently delay limiting action for a short period, perhaps a few seconds, when power is switched on. Unfortunately, if the delay circuit malfunctions, the limiter may never be turned on. For example, the turn-on delay circuit in the UA5088 adds many single point failures to this

device. A related challenge may arise if the limiter must drive reactive or switched circuits in the nuclear explosive under test. Suppose, as happened in the case of the UA5088, a fast acting fuse blower is activated by a few microsecond wide current spike that would not cause any damage. The only way to eliminate the unwanted activation may be to raise the over current trip level to a much higher value than would otherwise be needed. For example, the existence of microsecond duration spikes recently led to the selection of 3 amperes trip levels for some lines that carry nominal currents of a few hundred milliamperes.

Sometimes size and weight are not of great concern at Pantex, but sometimes they are most important. In the case of the command disable tester for the W80, size and weight were not of primary concern. However, in the case of the UA5088, which will be hand carried to remote locations, size and weight had to be considered carefully. Frequently, because it uses only one high power semiconductor device, a fuse blower will be smaller and lighter than other limiters.

It was pointed out in Section 3 that improper component layout or improper routing of wiring can defeat any limiter. It does little good to design and build a great limiter, and then run the inputs and the outputs next to each other in a tightly wrapped wire bundle. However, this was done frequently in the past, and it will almost certainly be done in the future unless the designer specifies layout and routing with the same care that he specifies circuit design and component selection.

8. Conclusions

Electrical tests are conducted on nuclear explosives at Pantex. The electrical testers used for the tests must be designed so that they create the lowest possible risk of any unintended application of electrical energy. Current flows between the tester and the device under test must be limited to the lowest levels that will assure reliable completion of required tests. Each tester must be designed so that the risk of over current is as low as is reasonably attainable. An essential part of risk management is the selection of the lowest voltage and lowest total energy power source that will support reliable operation of the tester. Another essential part of risk reduction is the use of robust barriers to separate parts of the tester; this is shown in Figure 2. The selection of a power source and the use of barriers is so important because no limiter will withstand unlimited voltage or dissipate unlimited energy, and no limiter can perform if it is bypassed.

Another part of risk reduction is the use of current limiters to limit the electrical current that can flow between the tester and the nuclear explosive. Five type of limiters, the fuse blower, the resistor limiter, and three types of limiters based on active semiconductor devices such as transistors, were discussed in detail. There are advantages and disadvantages to each type of limiter. Many of these are identified and discussed in Sections 4, 5, and 6. None of the limiters is the right choice for every application. Each one may be a good choice for a particular application. The designer must select the one that best meets requirements, and then show how inherent disadvantages have been resolved.

Poor layout of components or poor wiring can make any limiter ineffective. Even though component layout and the routing of wiring may not be as interesting as circuit design, the tester designer must assure that they are done properly.

Appendix A
Current Limiting Resistors

R. V. Baron was the Sandia expert on resistors for over ten years. He was asked to evaluate resistors for use in current limiters. He documented his work in a memo to D. H. Loescher. This memo is reproduced below.

Sandia National Laboratories

Albuquerque, New Mexico 87185

date: January 3, 1994

to: D. H. Loescher, 12332, MS0492

from: R. V. Baron, 2276, MS1081

subject: Final Report of Nuclear Weapon Tester Current Limiting Resistor Testing.

Introduction

Presently carbon composition resistors are used to limit the current that can be supplied by Nuclear Weapon testers during a fault condition. One of the references[1] that suggest this resistor type describes the usage in a circuit similar to Figure 1 This circuit is designed to be used to protect against such things as power line surges, spikes, and lightning strikes. This reference also states that carbon composition resistors have very good surge capabilities. The purpose of this study was to determine how true this is, to define the ultimate failure mode, and to determine if another type or types of resistor would be a better choice.

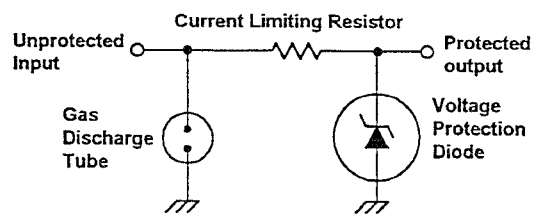

Figure 1. Surge Protector from Reference 1.

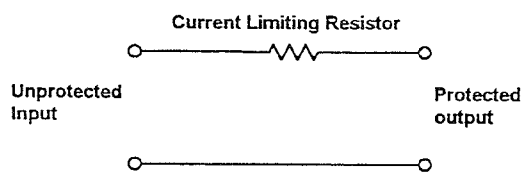

Figure 2, Surge Protector used in Nuclear Weapons Testers.

The two shunt elements shown in Figure 1 are not desirable for nuclear weapon use as the circuit will function normally even if they have failed or were never installed. Also, since the portion of a nuclear weapon tester connected to the weapon is powered entirely by batteries, the threat is not from a power line surge or spike but from an accident that will connect the batteries powering this portion of the tester to an improper wire connected to the weapon and/or some other failure such as crossed pins or improperly connected connector such that the current is applied to an incorrect wire in the weapon. Figure 2. The circuit in Figure 2 is acceptable since no power line surges are possible and the maximum voltage is well defined. If the resistor is missing or open, the tester will not work properly. A simple measurement can verify that the resistor is the correct value. The total voltage and energy available in this application is not from an ill defined, short surge but can be determined as the maximum of all battery cells connected in series. This voltage may be present until the batteries are drained. The resis-

tance of this resistor is usually chosen to limit the current to 100 mA at the maximum voltage possible.

If the current is to be limited to 100 mA, the required series resistance will vary as the voltage, R = 10V. The power dissipated in the resistor will also vary as the voltage since P = VI. For the same maximum current limit of 100 mA, the maximum power dissipated in the resistor would be P = 0.1V. Since the potential voltage in a tester can exceed several hundred volts, power dissipations of 10 to 40 Watts or more are possible and resistances of 1 kΩ to 4 kΩ must be used. If a different current is chosen, these equations will have to be changed accordingly.

Four types of resistors, listed in Table 1, were procured for this study. They were chosen based on their reputed surge resistance. The Tin Oxide Film was chosen since it was developed by AT&T for use in surge protectors. This resistor is specifically designed to open cleanly and not char or flame. The resistance value was 1 kΩ for all resistors. The power ratings chosen were either the maximum available, e.g., carbon composition and tin oxide types, or did not exceed 2 inches in length. One inch versions of the wire wound, 5 W rated, and ceramic/carbon, 3 W rated, resistors were also purchased. All the resistors were 1% initial tolerance except the carbon composition resistors that were 5% initial tolerance. Two combinations were also tested. A combination of a tin oxide resistor and a 3 Watt incandescent lamp in series look very promising if the size can be tolerated. A carbon composition and tin oxide resistor in series eventually behaved like a tin oxide resistor.

Each resistor was tested at voltages corresponding to 20 to 40 Watts across 1 kΩ. These voltages were chosen so that failures would occur within an hour or so. A few resistors were tested at lower voltages.

Table 1 Resistor Types Tested.

Resistor Construction	Power Rating, 70 °C	Manufacturer	Catalog Type
Carbon Composition	2 Watt	Allen Bradley	HB
Wire Wound	5 Watt 10 Watt	Dale	ESS-5 ESS-10
Tin Oxide Film	3 Watt	Dale	FP-3P
Ceramic/Carbon	3 Watt 5 Watt	Carborundum	234AS 102AS
3 W Lamp/Tin Oxide	———	———	———
Carbon Comp/Tin Oxide	5 Watt Total	———	———

Carbon Composition Resistors.

Carbon composition resistors are manufactured by mixing carbon power with a binder. The amount of carbon is varied to achieve the desired resistivity. This mix is molded into a cylinder with embedded leads. The external coating is then applied and the resistors are marked. Carbon composition resistors are manufactured in power ratings at 70 °C of 1/8 W, 1/4 W, 1/2 W, 1 W, and 2 W. The 2 W resistor was tested in this study. Note that the 2 W rating at 70 °C is sometimes listed as 5 W at 25 °C.

When subjected to high power levels, the resistance increases to 5 to 6 times the initial resistance in the first 20 to 30 seconds, see Figure 3. Figure 4 shows the variation in the time required for the resistor to start to stabilize at the high resistance condition. After reaching this peak, the resistance then slowly decreases until it drops to 4 to 5 times the initial resistance. At this point the resistance falls rapidly to 1/10th to 1/20th of the initial resistance and the resistor is essentially shorted. As expected, the time before the resistor shorts varies with the applied voltage/power. Below 140 volts (20 W initial power) the resistors did not short after being on test for up to 8 hours. However, the resistance was slowly dropping and, with sufficient time or an external source of heat, the resistor would be expected to eventually short. Figure 5 shows the time to short for the various applied voltages used in this test. External heat from any source will reduce the time to short at any voltage. The mechanism for shorting is Joule heating which carbonizes the binder resulting in the eventual lowering of the resistance. A fire with no voltage applied can cause a carbon composition to carbonize and short. Lower wattage rating

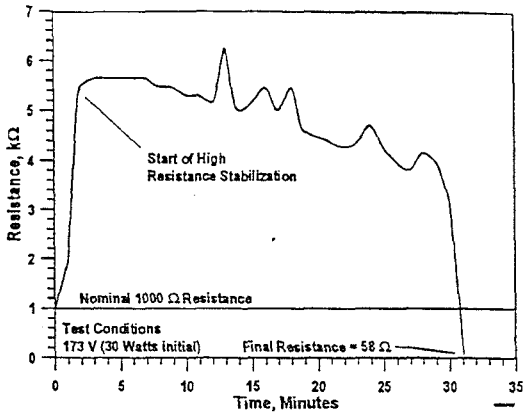

Figure 3, Resistance change characteristic for carbon composition resistors tested at 173 V, 30 W initial power. Shorting occurred in all but one of the resistors tested above 20 W.

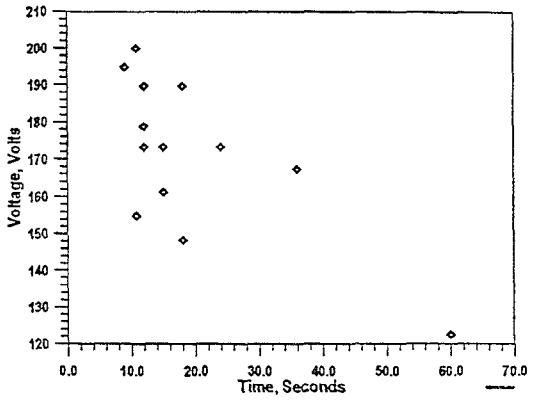

Figure 4, Time until the resistance increase starts to stabilize.

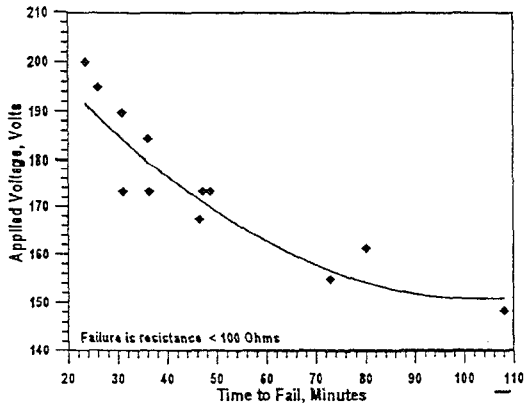

Figure 5, Time until short for Carbon Composition Resistors.

resistors should have similar characteristics but will short sooner.

Allen Bradley is recognized as the leading manufacturer of carbon composition resistors. The usage of carbon composition resistors has been continually decreasing and one of Allen Bradley's distributors, TTI, is predicting that Allen Bradley will stop manufacturing carbon composition resistors sometime in the future. Appendix A contains a 2252 newsletter published after receipt of a letter from TTI, the Allen Bradley distributor.

Tin Oxide Resistors

Tin Oxide resistors were developed by AT&T and Corning Resistor Co., now DALE Electronics, in Bradford, PA, for use in telephone equipment placed at a customer's site. These resistors are required to survive or open cleanly during a lighting caused surge without flaming or starting a fire. This resistor is manufactured by depositing a tin oxide film on an optical glass core. The thickness of the tin oxide is varied to achieve the desired resistivity. The rod is cut to length, the ends coated with a conductive metal, end caps are pushed onto the blank and the resistor is laser trimmed to value and coated. A flameproof coating is applied to reduce the chance of starting a fire. Tin oxide resistors are manufactured in power ratings at 70 °C of 1/2 W, 1 W, 2 W, and 3 W. The 3 W resistor was tested in this study. Smaller wattage's may be desirable for this usage.

Figure 6 shows the behavior of these resistors when they are subjected to high power levels. The resistance stays fairly constant near the nominal resistance until the resistor nears failure. Depending on the applied voltage, this can be occur in a few seconds to tens of seconds. The resistance then drops to a minimum of 1/3 of the nominal resistance for a few seconds. The final failure is then initiated and the resistance increases until the resistor opens. This open occurs at the center hot spot where the tin oxide film is ruptured. Occasionally, short periods of lower resistance may still occur but the resistance of these flashovers is at least twice the nominal resistance. At 122 volts one resistor did not open but, after dropping to 437 ohms, the resistance rose to 816 ohms where it stabilized until the test was stopped 45 minutes later. This resistor showed evidence of extensive heating around the end caps, not at the center hot spot. Figure 7 shows the minimum resistances that occurred during this test. The resistors tested at the lowest voltages did not fail but stabilized at a resistance above the minimum resistance. The minimum resistance appears to be well behaved and may be due to some property of the coating. Uncoated resistors were not available and removing the coating without

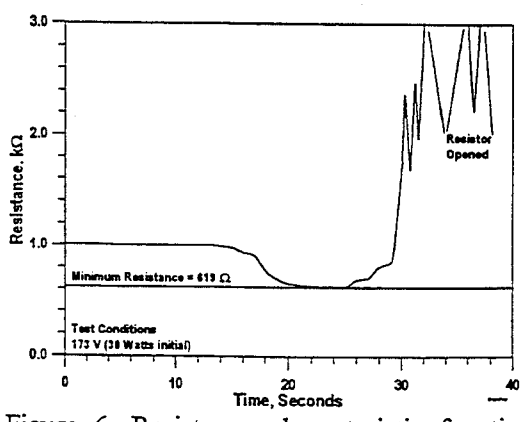

Figure 6, Resistance characteristic for tin oxide resistors tested at 173 V, 30 W initial power. The shape is characteristic of tests at all voltages where the resistor opened. No resistors shorted.

damaging the resistive film was not possible.

Figure 8 shows the time to open for the various applied voltages used in this test. The mechanism for failure is Joule heating which eventually vaporizes the tin oxide film thereby causing the resistor to open.

This resistor most closely meets the requirements for this study. The resistance shift may be compensated for by using a resistor that is three times the value required to limit the current. In other words, to limit the current to 100 mA chose a resistor such that R = 30 V. A lower wattage resistor would fail in a shorter time and might be an additional option. Since this resistor is a somewhat specialized item, it is available with only one standard coating. Other coatings may be obtained but would require special processing.

DALE Electronics, Bradford, PA, is the only manufacturer of this type of resistor.

Ceramic/Carbon Resistors.

Ceramic/carbon resistors were developed by the Carborundum Co., Niagara Falls, NY, to absorb high energy pulses. These resistors are made from a carbon loaded ceramic with end caps and leads. The amount of carbon, and the diameter and length of the ceramic rod determine the final resistance value. The rods are cut to length, the ends coated with a silver loaded epoxy, and end caps are pressed on. A flameproof coating is then applied. Connection to the resistive element is thru the silver loaded epoxy. It was hoped that these resistors would exhibit an increasing resistance characteristic similar to the carbon composition resistors without the

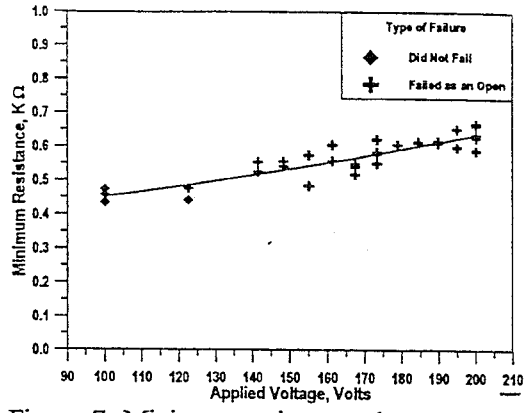

Figure 7, Minimum resistance that occurred during testing.

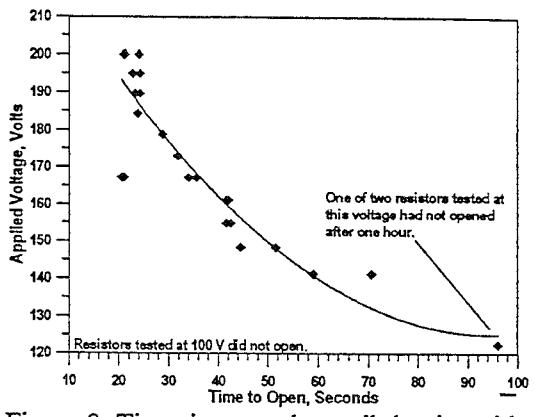

Figure 8, Time, in seconds, until the tin oxide resistor opened.

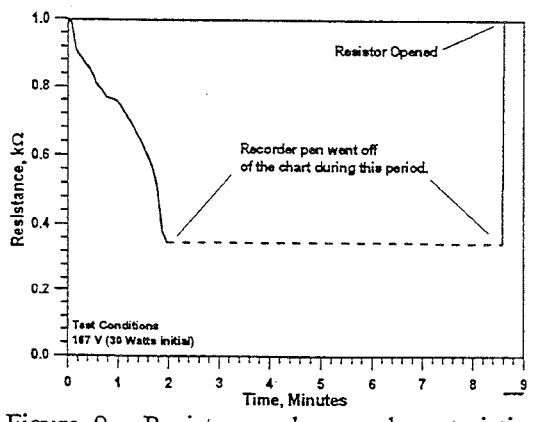

Figure 9, Resistance change characteristic for ceramic/carbon resistors tested at 173 V, 30 W initial power. The shape is characteristic of tests at all voltages. All of these resistors eventually opened.

eventual shorting due to the carbonization of the binder since the binder is a ceramic. The 234AS type ceramic/carbon resistors are manufactured only in a 3 Watt rating at 40 °C. Five Watt, 102AS types were also tested. Other sizes are manufactured but they run 4 inches to 24 inches long. Disks and washer types are also available but they start at 1.6 inches in diameter and run to 4.75 inches in diameter. These types were not judged to be practical for this study.

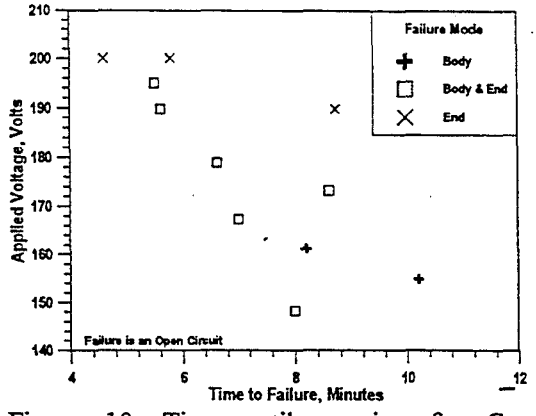

Figure 10, Time until opening for Ceramic/Carbon resistors.

Figure 9 shows the behavior of ceramic resistors when subjected to high power levels. The resistance starts to drop immediately after power is applied. The resistor shown in Figure 9 took two minutes to reach the limit of the chart recorder, 500 mA. The current exceeded 500 mA for 6.5 minutes when the resistor finally failed open. This general characteristic occurs regardless of the applied power. The time to failure, shown in Figure 10, tends to be shorter at higher power levels but is somewhat erratic. These resistors exhibited two different failure modes depending on the applied voltage. At the lower voltages, the resistor failed in the center of the body due to hot spot heating destroying the ceramic. At the highest voltages tested, the failure occurred at the end caps. This is due to the high current density at the edge of the end caps destroying the silver epoxy. Some of these resistors exhibited very little damage at the center hot spot. Between these two voltages, both types of damage were observed on the resistor. In this region, both modes were severe enough to have caused failure.

The 5 Watt, 102AS Type, exhibited similar characteristics. These resistors did not fail, even after hours on test at the lower voltages. A resistor tested at 173 volts, 30 W initial power, did not fail after 3 hours but the resistance had dropped to 935 Ω and had a downward slope. Failures at the higher voltages were similar to the 3 Watt 234AS resistors except that there was much less melting of the ceramic.

The ceramic resistors did not live up to expectations. The reduction in resistance is uncontrolled and results in very low resistances that would provide no protection.

Wire Wound Resistors.

The wire wound resistors tested were purchased from DALE Electronics, Columbus, NB. Wire wound resistors are the known for their ability to withstand overloads. These resistors are manufactured by placing end caps on a ceramic core and winding Nickel/Chromium wire onto the core between the end caps. The wire is welded to the end caps at each end. The coating on the resistor tested is a proprietary silicone. Other types of coatings are available, including flameproof, but were not tested. The overload charac-

teristics of this type of resistor are due to the relatively large amount of metal in the resistance element. The wire resistivity, length and cross-sectional area determine the final resistance. Figure 11 shows the resistance variation of a typical 5 Watt wire wound resistor tested at 173 V. The pen on the recorder left the chart for a short period at 48 seconds. Carbonization of the coating is the cause of this undesirable behavior. The downward drift in resistance prior to carbonization of the coating is probably due to changes in the coating. Other resistors tested at the same or higher voltages caused the power supply to self limit at 1.2 A. When this occurred the test was terminated. If left on test long enough, these resistors would have eventually opened as the coating burned away.

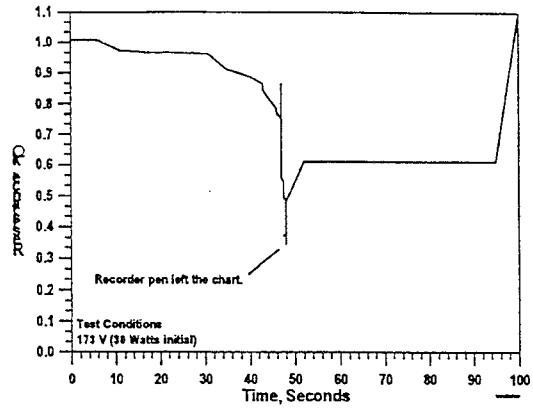

Figure 11, Resistance change characteristic for 5 Watt wire wound resistor tested at 173 V, 30 W initial power. The coating caused the resistance to drop below 376 Ω after 48 seconds. This resistor opened at 100 seconds. None of the resistors tested permanently shorted.

All the five watt resistors that were tested below 173 V (30 Watts) were removed from test after more than two and a quarter hours and they had neither shorted nor opened. One resistor, tested at 148 V, 22 W, was left on test for just over 6 hours. During this time the current had only increased by 2 mA. Figure 12 shows the resistance characteristic at 167 V (28 watts). During this test the resistance dropped to 931 Ω after 12 minutes and then recovered and stabilized at 973 Ω until power was removed after 175.3 minutes (2.9 hours). As expected, tests at lower voltages showed less resistance drop. The resistance drop is most likely due to the change in the insulation resistance of the coating.

Several ten watt wire wound resistors were also tested. The resistance variation observed at 200 V (40 Watts) was less then the variation of the five watt resistors tested at 173 V. The test was stopped after an hour and a half when there was no evidence that the resistor would ever fail. If this resistor gets hot enough, the coating will cause this resistor to behave in a manner similar to the 5 Watt resistor.

Wire wound resistors with silicon coatings are not acceptable but a different coating, or no coating at all may be acceptable.

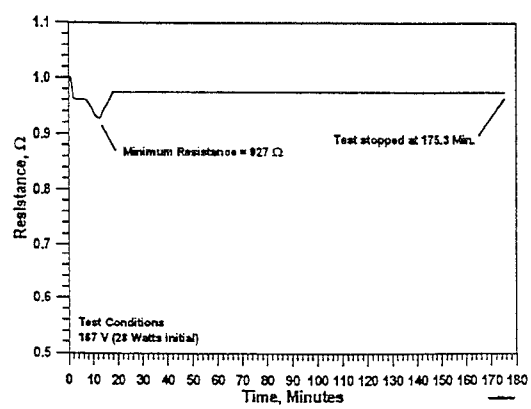

Figure 12, Resistance change characteristic for 5 Watt wire wound resistors tested at 167 V, 28 Watts initial power. The resistance when the test was stopped was 973 Ω.

Wire wound resistors are manufactured using flame proof coatings which will not carbonize but this type of coating may still result in a characteristic similar to the tin oxide resistors. A completely uncoated resistor may not exhibit the resistance drops seen in the tested resistors but this type is available only as a special. Other coatings or packages are available, each of which will have its own thermal, and therefore, failure characteristics. While the wire wound resistors initially appeared to be very desirable due to their overload capability, the carbonization problem must be overcome.

Combinations

Lamp/Tin Oxide in Series

Jim Hanlon, 2252, suggested using a lamp. A lamp alone has a low cold resistance but if a resistor is placed in series with the lamp, this can be overcome. A properly chosen incandescent lamp in series with a tin oxide resistor results in a nearly perfect circuit. The low cold resistance of the lamp, about 188 Ω for the lamp tested, results in little added resistance to the cold circuit and results in resistances of 4 to 5 kΩ under fault conditions. The tin oxide resistor is added to assure that the minimum resistance of the circuit will limit the current to 100 mA. If the fault is large enough or lasts long enough, the lamp will burn out, or the resistor will open, opening the circuit. The lamp reaches its operating temperature within a few seconds. Figure 13 shows the resistance characteristic of a Sylvania 6S6, 115-125 V, 6 Watt lamp in series with a 1 kΩ, 3 W tin oxide resistor. This is a candelabra based lamp used in lab benches to indicate that the power is on. This test was run at 173 V. The resistance stabilized at 3.26 kΩ after 1.5 seconds. The initial transient may be due to the power supply voltage coming up slowly. At no time did the resistor exceed its ratings and, after 72 minutes, the resistor was only slightly warm.

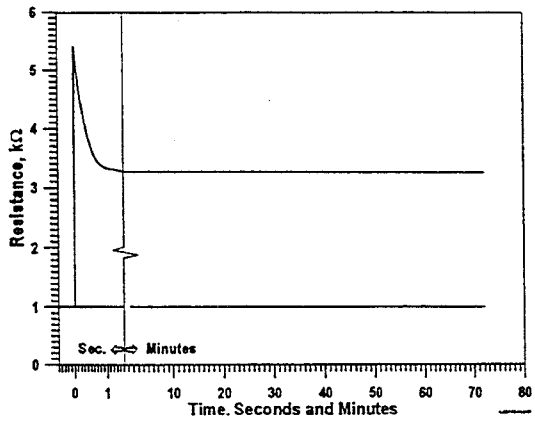

Figure 13, Resistance characteristic of a lamp, tin oxide resistor in series tested at 173 V.

Figure 14 shows the current-voltage characteristic of this lamp. The load line for a 1000 W resistor operated at 173 volts is also shown. The intersection of the two curves is the operating point. At this point

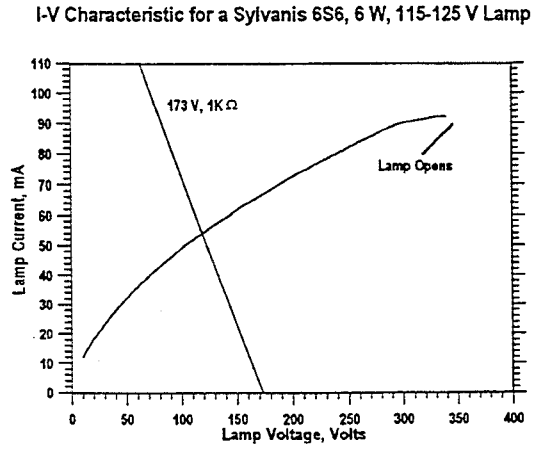

Figure 14, Current Voltage Characteristic of a 6 Watt lamp. Also shown is the load line for a 1 kΩ resistor operated at 173 volts.

54 mA of current will flow in the circuit. The lamp tested was a different lamp then the lamp measured for the characteristic and the stabilized current was 53 mA. Figure 15 shows this same characteristic with the load lines for the appropriate resistors to protect circuits with fault voltages of 100, 200, 300 and 400 V. Also plotted is the maximum rated power for a 3 W tin oxide resistor for the requirements of 100 mA maximum current. It is apparent that the resistor will be over powered when the fault voltage exceeds 150 V. However, At 400 V applied the resistor is only dissipating 9.45 W. Even so, when the tin oxide resistor enters its low resistance mode, the lamp will still limit the current to less than 100 mA. For example, if the tin oxide resistor drops to 1333 Ω, The voltage across the lamp will increase to about 290 volts and the current will limit at about 88 mA. The lamp will burn out eventually, thereby offering final protection. Of course, a lower wattage lamp may be used to reduce the current even more. A 3 Watt lamp should extend the region of operation at less than rated power to 260 volts. The 6S6 lamps are listed in Allied Catalog for voltages of 115-125, 130, 145, 120DC and 130DC. A 3 Watt version, 3S6/5 for 120-125 V service, is also listed. Lamp manufacturers may have additional lamps to choose from.

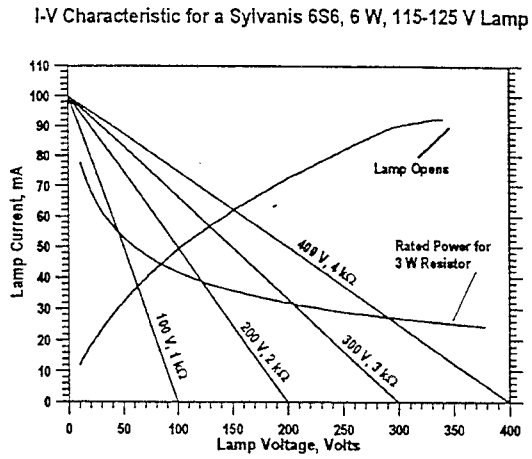

Figure 15, Current-voltage characteristic showing the load lines for various tester voltages and the 3 W maximum power rating line.

The cold resistance of the lamp is around 188 Ω at room temperature. Therefore, the presence of both the lamp and the resistor can be easily verified by measuring the resistance of the series circuit at 100 μA and again at, say, 10 to 50 mA, depending on the voltage being protected against. The first measurement will be the tin oxide resistor plus the cold resistance of the lamp and the second measurement will consist of the tin oxide resistor plus the hot resistance of the lamp. For the 100 V protection circuit, the low current reading will be about 1200 W and the high current reading will be 1800 Ω to 3000 Ω depending on the test current. This is an easy and accurate method of assuring that the circuit is correct.

This solution may be somewhat large as this lamp is approximately 1 inch in diameter and 2 inches long, but clever packaging may result in an acceptable size. Lamp manufacturers have other lamps available that may have more optimum size, voltage and wattage ratings.

Carbon/Tin Oxide in Series

A carbon composition in series with a tin oxide resistor was also tested to determine if the tin oxide could be used to offset the end-of-life shorting phenomenon exhibited by the carbon composition resistors. A typical resistance characteristic of this combination is shown

in Figure 16. The minimum resistance of this combination was 895 Ω. Ratioing this reading to the total resistance of both resistors, 2000 Ω, gives 0.4475 which would be the equivalent of 447.5 Ω if the total resistance of the series combination was 1000 Ω. This really is no improvement since the minimum resistance for the 1000 Ω tin oxide resistor shown in Figure 6 was 437 Ω.

The voltage for this test was 245 V which placed 30 watts initial power across the 2000 Ω total resistance (15 watts initial power in each resistor). Note that the increase in the carbon composition resistance effectively places most of the applied voltage, and power, across the carbon composition resistor. After the resistance of the carbon composition resistor falls below the nominal resistance, most of the voltage and power is now placed across the tin oxide resistor. The results in a characteristic that is the sum, in time, of the characteristics for each resistor. The carbon composition delays the onset of the low resistance caused by the tin oxide but does not prevent its occurrence. This is because the carbon composition resistor is in its low resistance mode when the tin oxide resistor starts to fail. Comparing Figure 4 and Figure 8 it is apparent that this is a race that the tin oxide resistor cannot be win.

Figure 17 shows the minimum resistance that occurred for three different applied voltages. In each case the voltage was chosen to give the same initial power in the pair that was used for the individual resistor tests. Figure 18 shows the time to open for the series pair. These times are on the order of the times to short for the carbon composition resistors tested at higher power levels.

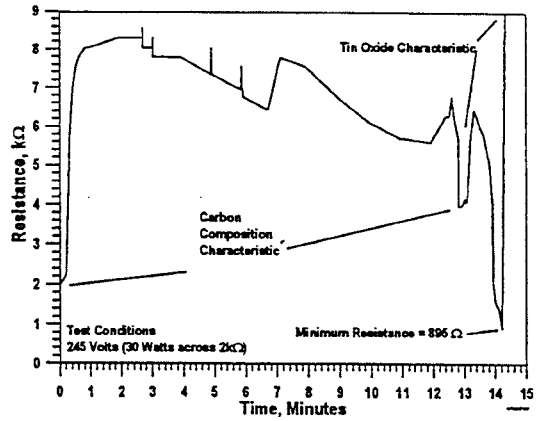

Figure 16, Resistance change characteristic of a series combination of tin oxide and carbon composition resistors tested at 245 V.

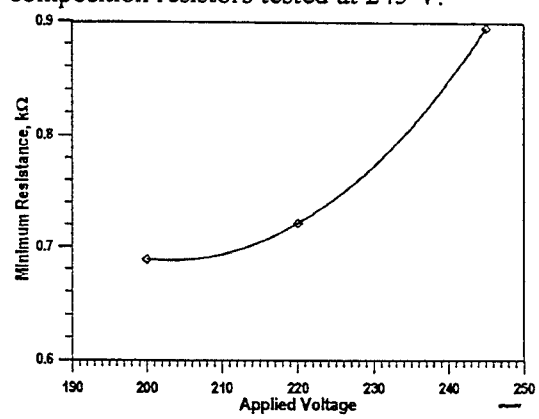

Figure 17, Minimum resistance for a 3 W tin oxide and 2 W carbon composition resistors in series.

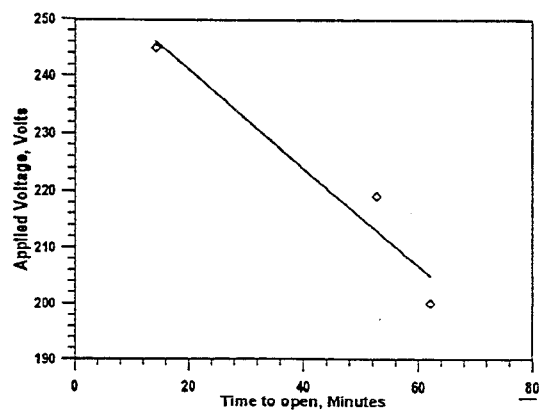

Figure 18, Time to open for 3 W tin oxide and 2 W carbon composition resistors in series.

As noted before, as the carbon composition resistor increases in value, the fraction of the voltage and power across the carbon composition resistor will increase until the resistor shorts. If 500 Ω were used for both resistors, the times should appear more like the carbon composition resistance times. Using a smaller wattage tin oxide resistor in the series pair will shorten the time required for the tin oxide resistor to open. This may be sufficient to assure that the race is always won by the tin oxide resistor but this needs to be thoroughly tested before this is considered to be a viable solution. Also the values of the two resistors must be carefully selected. Using the same resistance for both resistors is not necessarily optimum.

Conclusions

There are no commercially available resistors that will, singly, meet all the requirements for surge limiting in nuclear weapon testers. The carbon composition resistors presently used increase in resistance with applied voltage/power but they ***WILL*** eventually short if the fault condition lasts long enough. Also, external heat sources will reduce the time to short. If the maximum amount of time under the fault conditions can be rigidly controlled and is short enough, carbon composition resistors still might be satisfactory. This time must be much shorter then the minimum times shown in Figure 5. These resistors may also be available only for a limited time, see appendix A.

The tin oxide resistors have a well controlled, but not ideal, characteristic. These resistors decrease to approximately 1/3 of their initial value prior to opening. However, this is a well-defined phenomenon. If a lower wattage version is used and the resistance is raised by a factor of two, the overall characteristic may be satisfactory. This should be looked at more closely. A different coating material, or no coating at all, may create an acceptable resistor. The problem of handling uncoated resistors may be alleviated by having the resistor supplier mount the resistor in the desired configuration. Procedures will have to be incorporated to ensure that only uncoated resistors are used.

The carbon/ceramic resistors have nothing to recommend them for this use. The resistance characteristic has a long period of un-controlled low resistance. They do fail open but take a long time to do so.

The wire wound resistors tested have a coating that carbonizes and results in a very low resistance. A flameproof coating may be satisfactory although this coating may behave similarly to the coating used on the tin oxide resistors. An uncoated wire wound resistor should be satisfactory but will have to be special ordered. The specification will have to specify that no coating or impregnant be used. Again, the problem of handling uncoated resistors may be alleviated by having the resistor supplier mount the resistor in the desired configuration.

The combination of a lamp and another resistor results in an acceptable solution. The resistor and lamp will have to be matched using measured characteristics of the lamp. This combination will protect the circuit under all conditions.

Combinations of two or more of the resistor types tested are not satisfactory since there is no appropriate match in characteristics. In all cases, a race must be won. A single tin oxide, properly sized, is the best solution if the tester can stand the added resistance in the lines.

---

[1]Protection of Electronic Circuits from Overvoltages, Ronald B. Standler, John Wiley & Sons, 1989, chapter 12, pp. 171-174.

RVB:2276

Copy to:		Mail Stop
8476	D. J. Amaral	
12365	E. A. Disch	0635
12332	G. A. Sanders	0492
2252	P. V. Plunkett	0523
2252	C. E. McCarty	0523
2276	W. M. Miller	1081
2276	R. V. Baron	1081

Appendix A

PREFERRED ELECTRONIC PARTS NEWSLETTER

"We can help make your successes affordable"

Newsletter No.: PEPN93-06/F *Date: June 10, 1993*

ALL RECEIPIENTS: Please share with interested parties. Due to recent reorganization and restructuring, perfect distribution is surely impossible. Every attempt is made to keep the distribution list current. We ask that you tolerate misdirected copies.To be added or deleted from distribution , please call Vieta Crain, 2252, (505) 845-8062. For more information on Preferred Parts, please contact Paul Plunkett, 2252, 844-7646 or Jim McKenney, 2252, 844-2474.

DISCRETE COMPONENT PRODUCT ALERT

This newsletter contains a component alert issued by Department 9213 that covers carbon composition resistors that some Sandians might be using. Also included are excerpts from a memorandum written by TTI, a resistor, capacitor, and connector distributor, which prompted Department 9213's alert. If there are any questions regarding the attached information contact: ***Jim McKenney, 2252 (844-2474); or Charles McCarty, 2252 (844-6255)***

TTI

DISTRIBUTORS OF RESISTORS, CAPACITORS, AND CONNECTORS

TO: *Sales & Product*

FROM: *Mike Morton*

DATE *January 19, 1993*

RE: ALLEN-BRADLEY

Attempts to restore profitability to the Allen-Bradley Component Division through reduction in cost and increased prices have proven to be unsuccessful. As the demand for carbon composition resistors diminished each year, economies of volume production are lost. This reduction in production volume then equates to higher component cost and reduced revenues. Lower revenues with fixed expenses equate to losses. This is the exact reason why Allen-Bradley has continued to raise prices. Unfortunately this trend will continue until such time that the demand has diminished to a point that it becomes impossible to produce carbon composition resistors at a profit. We believe this could happen within the next couple of years.

Sandia National Laboratories
Albuquerque, New Mexico 87185

date: May 4, 1993

to: Distribution

from: Ruth Reichert, 9213

subject: R.C.R. Resistor **ALERT!**

Carbon composition resistors may not be available within the next year or two. Allen Bradley is the only manufacturer of carbon composition resistors and is experiencing declining sales in this product. Consequently they anticipate discontinuance of this product line.

START NOW! To prevent a crisis for carbon composition resistors, it is important that Engineering start looking at carbon composition resistors required for present commitments, and evaluating the RL and RLR film resistors. As a minimum, the evaluation should include use of these resistors in new designs as well as replacements in existing designs that might require future assembly. Note attached memorandum from TTI. Please contact me if you have any questions or if there is concern over replacement types.

Distribution: Please route this to any staff that might have an interest.

9202 S.A. Spraggins
9212 C.M. Greenwood
9214 L.E. Anderson
9214 M.S. Akins
9214 R.W. Cross
9214 D.C. Grahek
9214 K.W. McCoy
9214 Z.P. Miller
9216 F.L. Crutcher
9222 A.J. Medina
9225 A.C. Boye
9231 P.J. Green

Copy to:

9211 T.G. Taylor
9213 D.E. Barnes
9213 J.H. Borrego
9213 R.S. Kreinbrink
9213 M. Leahy
9214 C.B. Key
9214 G.T. Kolesar

Appendix B
Design Equations For The Type B Limiter

The circuit for the Type B limiter is shown below.

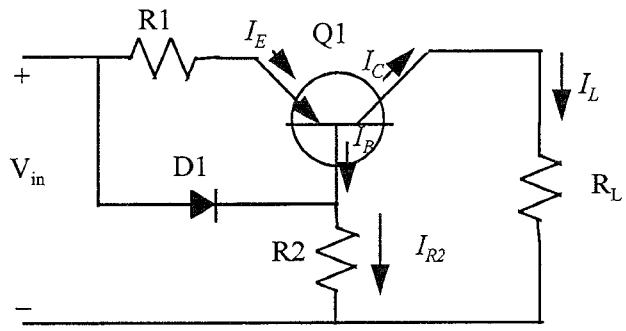

Conventional symbols, that is, I_E, I_B, and I_C, are used to represent emitter current, base current, and collector current, respectively. Note that the load current, I_L, and the collector current, I_C, are equal to each other. Diode, D1, is a light emitting voltage with a turn on voltage, $V_{D,on}$, that is equal to approximately 1.4 V.

Consider first operation of the circuit in the normal, that is to say, non-limiting mode. To achieve low power loss, the transistor, Q1, is operated in saturation with an emitter to collector voltage drop of about 0. 4 V. The values of the resistors must be chosen so that saturated operation of Q1 is obtained. The supply voltage, Vin, the load current I_L and the component values are related by the following equation:

$$V_{in} = V_{EC,sat} + I_C RL + (I_C + I_B)R1 \qquad \text{(B.1)}$$

To keep losses low in the base circuit of Q1, the base current should be set near the minimum amount that will assure saturation. If the small signal current gain of the transistor is reasonably large, which most always will be the case, it is likely that a low enough $V_{EC,sat}$ will be achieved with a base current that is no larger than 10 % of the I_C. If I_B is not larger than 10 % of I_C, the error will not be large if I_C+I_B in the last term on the right hand side of Eq. (B.1), is replaced with I_C. If this replacement is made, and if it is recognized that I_L and I_C are equal, the equation shown below is obtained.

$$V_{in} \sim V_{EC,sat} + I_L(RL + R1). \qquad \text{(B.2)}$$

If RL is large compared to R1 and V_{in} is large compared to $V_{EC,sat}$, both of which will usually be the case, it is also reasonable to further simplify the equation and write:

$$I_{L,\,normal} \sim V_{in}/RL. \qquad \text{(B.3)}$$

The value of R2 is selected so that during normal operation the transistor is in saturation. This requires that the base current be larger than $I_{L,\,normal}/\beta$; that is, that

$$I_{B,normal} > I_{L,normal}/\beta. \tag{B.4}$$

in which β is the current gain of the transistor. How much larger will depend on the transistor selected. The base current is related to the circuit voltages and resistances by the equation

$$I_{B,\,normal} = (V_{in} - VR1 - V_{EB})/R2. \tag{B.5}$$

If V_{in} is significantly larger than both VR1 and V_{EB}, which will usually be the case, the equation can be simplified to

$$I_{B,\,normal} \sim V_{in}/R2 \tag{B.6}$$

Eq. (B.4) and Eq. (B.6) can be combined to obtain

$$R2 < \beta\, V_{in}/I_C. \tag{B.7}$$

Now consider the current limiting mode of operation in which the current to the load is $I_{L,max}$. In this mode, the sum of the voltage drops across R1 and the emitter-base junction of Q1 will be equal to the turn on voltage, $V_{D,on}$ of the light emitting diode

$$V_{D,on} = VR1 + V_{EB}. \tag{B.8}$$

The voltage VR1 is given by

$$VR1 = R1(I_{L,max} + I_B). \tag{B.9}$$

Because the transistor is not in saturation, I_B can be determined from

$$I_B = I_{L,max}/\beta, \tag{B.10}$$

and Eq. (B.9) can be written as

$$VR1 = R1\, I_{L,max}(1+1/\beta). \tag{B.11}$$

If Eq. (B.8) and Eq. (B.11) are combined, the result is

$$R1 = (V_{D.on} - V_{EB})/(I_{L,max}(1+1/\beta)). \tag{B.12}$$

The ratio of the maximum current, $I_{L,max}$ to the normal current, $I_{L,normal}$ is given approximately by:

$$I_{L,max}/ I_{L,normal} \sim ((V_{D,on} - V_{EB})/V_{in})x(RL/R1). \quad (B.13)$$

It is seen that the difference between the normal and limited current decreases as the value of R1 increases.

If the values of $I_{L,normal}$ and of $I_{L,max}$ are specified, or if the value $I_{L,normal}$ and the acceptable percentage of over current are specified, estimates of R1 and R2 can be obtained from the equations just given. Once estimates are available, refined values can be obtained from computer simulations and from experiments.

Distribution

15	Mason & Hanger - Silas Mason Co., Inc. Pantex Plant Attn: Mike Kelly, Tester Design, Bldg. 12-102 P. O. Box 30020 Amarillo, TX 79177
10	Professor Ken Noren Department of Electrical Engineering University of Idaho Moscow, ID 83844

1	MS 0482	D. M. Cotter, 2161
1	0487	J. D. Mangum, 2121
1	0492	G. A. Sanders, 12332
10	0492	D. H. Loescher, 12332
1	0505	J. T. Love, 2336
1	0519	H. D. Caton, 2612
1	0519	C. M. Jenkins, 2612
1	0519	D. A. Branscombe, 2612
5	9106	R. J. Amaral, 8417
1	0631	W. C. Nickell, 12300
1	9018	Central Technical Files, 8523-2
5	0899	Technical Library, 4414
2	0169	Review and Approval Desk, 12630 For DOE/OSTI