CONTRACTOR REPORT

NUREG/CR—4944
SAND87—7118
R1, RD
Printed July 1987

8024

RS-8232-2/66379

cy. 1

Containment Penetration Elastomer Seal Leak Rate Tests

8232-2//066379

00000001 -

Thomas L. Bridges
EG&G Idaho, Inc.
Idaho National Engineering Laboratory
Idaho Falls, ID 83415

Prepared by
Sandia National Laboratories
Albuquerque, New Mexico 87185 and Livermore, California 94550
for the United States Department of Energy
under Contract DE-AC04-76DP00789

Prepared for
U. S. NUCLEAR REGULATORY COMMISSION

111946

NOTICE

This report was prepared as an account of work sponsored by an agency of the United States Government. Neither the United States Government nor any agency thereof, or any of their employees, makes any warranty, expressed or implied, or assumes any legal liability or responsibility for any third party's use, or the results of such use, of any information, apparatus product or process disclosed in this report, or represents that its use by such third party would not infringe privately owned rights.

Available from

Superintendent of Documents
U.S. Government Printing Office
Post Office Box 37082
Washington, D.C. 20013-7082

and

National Technical Information Service
Springfield, VA 22161

NUREG/CR-4944
SAND87-7118
R1, RD

CONTAINMENT PENETRATION ELASTOMER SEAL LEAK RATE TESTS

Thomas L. Bridges

EG&G Idaho, Inc.
Idaho National Engineering Laboratory
Idaho Falls, Idaho 83415

Printed: July 1987

Sandia Project Monitor: L. N. Koenig

Work performed under Sandia Contract No. 21-5285

Prepared for
Sandia National Laboratories
Albuquerque, NM 87185
Operated by
Sandia Corporation
for the
U.S. Department of Energy

Prepared for
Division of Engineering
Office of Nuclear Regulatory Research
U.S. Nuclear Regulatory Commission
Washington, DC 20555
Under Memorandum of Understanding 40-550-75
NRC FIN No. A-1375

ABSTRACT

Tests were performed on three elastomer seal designs commonly used for nuclear plant containment mechanical penetrations. The objective of this research project is to obtain an understanding of the integrity and leakage behavior of these seal designs under severe accident temperature and pressure conditions. The three designs tested and the seal materials used in the tests were: (a) double tongue-and-groove design with silicone rubber seals, (b) double-O-ring design with neoprene and ethylene-propylene (EPDM) seals, and (c) double gumdrop design with neoprene and EPDM seals. The effects of thermal aging and angular rotations of flange mating surfaces were determined. The test results provide information required to characterize the leakage behavior of penetrations under severe accident conditions.

CONTENTS

	Page
ABSTRACT	iii/iv
ACKNOWLEDGMENTS	viii
EXECUTIVE SUMMARY	1
1.0 INTRODUCTION	2
2.0 BACKGROUND	2
3.0 CURRENT PROGRAM	2
4.0 DESCRIPTION OF TESTS	3
5.0 DESCRIPTION OF TEST APPARATUS	11
6.0 DESCRIPTION OF TESTING PROCEDURES	13
7.0 TEST RESULTS	19
8.0 CONCLUSIONS	28
9.0 REFERENCES	30
APPENDIX A--TEST FIXTURE DRAWINGS	31
APPENDIX B--TEST PROCEDURES	37

LIST OF FIGURES

Figure		Page
1	Double Tongue-and-Groove Seal Design	4
2	Double O-Ring Seal Design	5
3	Double Gumdrop Seal Design	7
4	Flange Separation and Rotation	10
5	Schematic Diagram of Seal Test Apparatus	12
6	Uninsulated DTG Test Fixture	14
7	Insulated Test Fixture	15
8	Thermocouple Locations for DTG Tests	16
9	Thermocouple Locations for DOR and DGD Tests	17
10	Silicone Rubber Seals at Completion of Test 6	25

LIST OF TABLES

Table		Page
1	Seal Test Matrix	8
2	Seal Hardness Values	11
3	Double Tongue-and-Groove Design With Silicone Rubber Seals	20
4	Double Gumdrop Design With EPDM Seals	21
5	Double O-Ring Design With EPDM Seals	22
6	Double Gumdrop Design With Neoprene Seals	23
7	Double O-Ring Design With Neoprene Seals	23
8	Leak Rates for DTG Design With Silicone Rubber Seals	26
9	Leak Rates for DGD Design With EPDM Seals	26
10	Leak Rates for DOR Design With EPDM Seals	27
11	Leak Rates for DGD Design With Neoprene Seals	27
12	Leak Rates for DOR Design With Neoprene Seals	28

ACKNOWLEDGMENTS

The author wishes to thank Larry Koenig, the technical monitor from Sandia National Laboratories, for his contributions during the testing portion of this project and also for his helpful comments during the reviewing process.

The author also wishes to express his appreciation to the following EG&G Idaho personnel: Billy Stoddard and Eric Yarger, for their expertise and hard work while running the tests; Berlinda Quintana, for her assistance in data reduction; and Gene Heaton, for preparing the figures for the report.

EXECUTIVE SUMMARY

The Engineering Analysis and Project and Engineering Support Divisions of EG&G Idaho, Inc. (EG&G Idaho), under contract to Sandia National Laboratories (SNL), have performed elastomer seal leak rate tests at the Idaho National Engineering Laboratory (INEL). These tests are part of the Integrity of Containment Penetrations Under Severe Accident Loads Program, which is being sponsored by the U.S. Nuclear Regulatory Commission (NRC) and managed by SNL. The objective of this program is to obtain knowledge of the integrity and leakage behavior of containment penetrations during severe accidents.

Three seal designs commonly used for nuclear power plant containment mechanical penetrations were tested at INEL. These seal designs were: (a) a double tongue-and-groove design with silicone rubber seals; (b) a double O-ring design with neoprene and EPDM seals; and (c) a double gumdrop design with neoprene and EPDM seals. The seal designs were tested at 160 psig pressure and at temperatures up to 700°F or seal failure, whichever came first. The seals were either thermally aged or unaged and were placed in test flanges with the seating surface of one of the flanges machined at an angle of 0° to 12° relative to the mating flange surface to simulate relative flange rotation due to severe accident pressure loading. The test fixtures were heated by resistance heaters and pressurized with dry nitrogen. The leak rate of the seals being tested was determined by flow turbine meters in the nitrogen supply line or by isolating the test fixture with a block valve and measuring the pressure decay. The effects of a steam environment and irradiation aging were not included in these tests, since evaluations of those effects are included in other portions of this program currently being performed at SNL.

The effects of flange rotation and thermal aging on the elastomer seal failure temperature were insignificant. The failure temperatures for silicone rubber seals in a nitrogen atmosphere were determined to be in excess of 700°F. The range of failure temperatures was 570° to 670°F for EPDM seals and 460° to 500°F for neoprene seals.

The effect of thermal aging on the seepage leak rate of the seals prior to failure was determined to be insignificant; however, the seepage leak rate prior to failure of the seals did increase with increased relative flange rotations. The leak rates after failure of the seals were determined to be controlled primarily by the amount of flange separation.

The leak rates determined in these tests should be used with the understanding that the effects of a steam environment and irradiation aging were not considered.

1.0 INTRODUCTION

Since the accident at Three Mile Island, a major effort in safety studies has been directed toward the risks and consequences of severe accidents. As a part of this effort, several studies are currently underway to determine the behavior of containments under severe accident conditions. Knowledge of the integrity and leakage behavior of containment beyond design conditions is required for the evaluation of severe accident mitigation strategies, risk studies, emergency preparedness planning.

Typically, each containment has 100 to 300 mechanical penetrations, providing a large number of potential containment leakage paths. Leakage behavior of those containment penetrations with elastomer seals is greatly influenced by the behavior of the elastomer seals. The objective of this study is to determine the leakage behavior during severe accident conditions of some elastomer seals commonly used for containment mechanical penetrations. This study is a portion of the Integrity of Containment Penetrations Under Severe Accident Loads Program currently being funded by the Office of Nuclear Regulatory Research of the NRC and managed by Sandia National Laboratories.

2.0 BACKGROUND

Prior to this study, EG&G Idaho performed a series of elastomer seal leak rate tests under contract with the Office of Nuclear Regulatory Research of the NRC (Reference 1). Those tests were limited to testing unaged rectangular silicone rubber seals and 1/2-in. diameter neoprene O-ring seals. Leak rates were determined as a function of flange separation for severe accident temperature and pressure conditions. Electric resistance heaters provided the heat source, and nitrogen gas provided the pressure source. The silicone rubber seals were tested using a double tongue-and-groove design, and the O-rings were tested in a double O-ring design.

3.0 CURRENT PROGRAM

One portion of this program was to test thermally aged seals of the designs previously tested using the seal test apparatus from the previous study (see "Description of Test Apparatus"). In addition, double gumdrop Type W neoprene seals were selected for testing in both a thermally aged and unaged condition. These tests with flange separation simulated pressure unseating penetration closures.

Testing seals for pressure seating penetration closures, closures on the inside of containment, was the second portion of this program. A study performed by Argonne National Laboratory (Reference 2) determined that sealing surface rotations may occur for large pressure seating penetration closures depending on the penetration

sleeve design. This rotation was estimated to be on the order of seven degrees at the containment burst pressure. The main objective of the second portion of this program was to determine what effect sealing surface rotation has on seal leakage under severe accident conditions.

4.0 DESCRIPTION OF TESTS

Seal leak rate tests were performed on three seal designs commonly used for containment mechanical penetrations. These seal designs are: (1) double tongue-and-groove (DTG); (2) double O-ring (DOR); and (3) double gumdrop (DGD). A study performed by Argonne National Laboratory (Reference 3) determined that these seal designs are among the most common used for large mechanical penetrations.

The double tongue-and-groove design shown in Figure 1 was tested with silicone rubber seals for both the pressure seating and unseating tests. The silicone rubber seals were Garlock Compound 8364 with a specified hardness of 40 durometer. This seal design is typical of most double tongue-and-groove designs. The width of the flange and spacing between the tongues varies somewhat from design to design.

Both "pressure seating" and "pressure unseating" designs were considered for the seals. "Pressure seating" refers to a penetration for which increased internal containment pressure will cause an increase in pressure between the mating surfaces of the containment and the penetration sealing surface. This would be typified by a hatch which opens inward to the containment so that, when closed, containment pressure pushes the hatch toward the containment wall. "Pressure unseating" refers to a penetration for which increased internal containment pressure will reduce pressure between the mating surfaces. This is typified by an external hatch which opens outward; containment pressure thus pushes the hatch away from the containment.

The test design was effectively a pressure unseating arrangement (see "Description of Test Apparatus"). However, because of the flange closure arrangement of bolts, seating was tightly controlled; and no natural separation, or unseating, occurred. Pressure unseating was simulated by shimming between flanges and thus forcing a specified metal-to-metal separation for specific tests.

The double O-ring design tested is as shown in Figure 2. Material references are commercial designations for specific seal materials. Seals made of Type W neoprene with a specified hardness of 40 durometer were tested for the pressure unseating test. Seals made of EPDM compound Number E603 with a specified hardness of 60 durometer were tested for the pressure seating tests. Double O-ring designs vary considerably in industry. O-rings with 1/8- to 3/4-in.

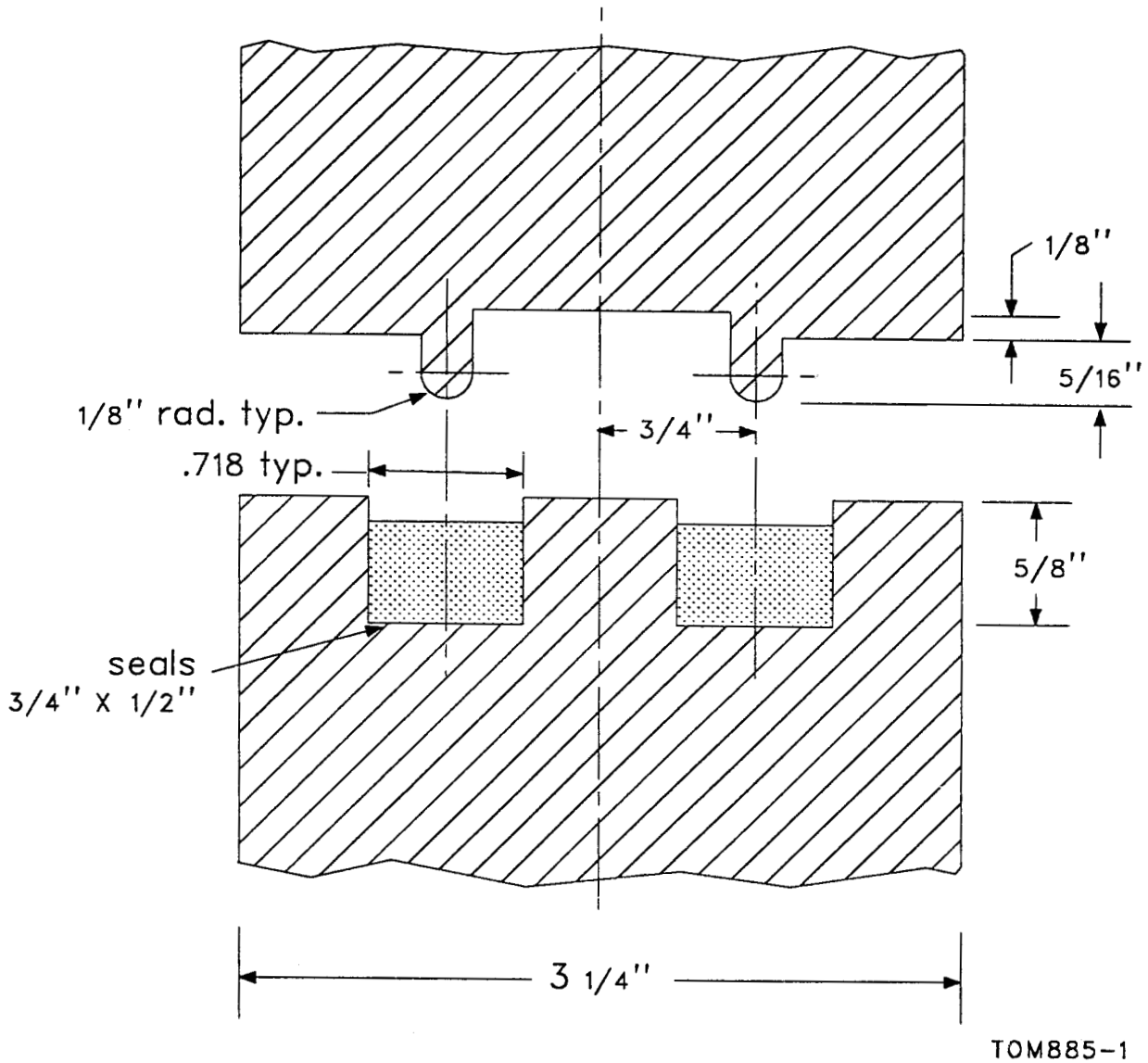

Figure 1. Double Tongue-and-Groove Seal Design

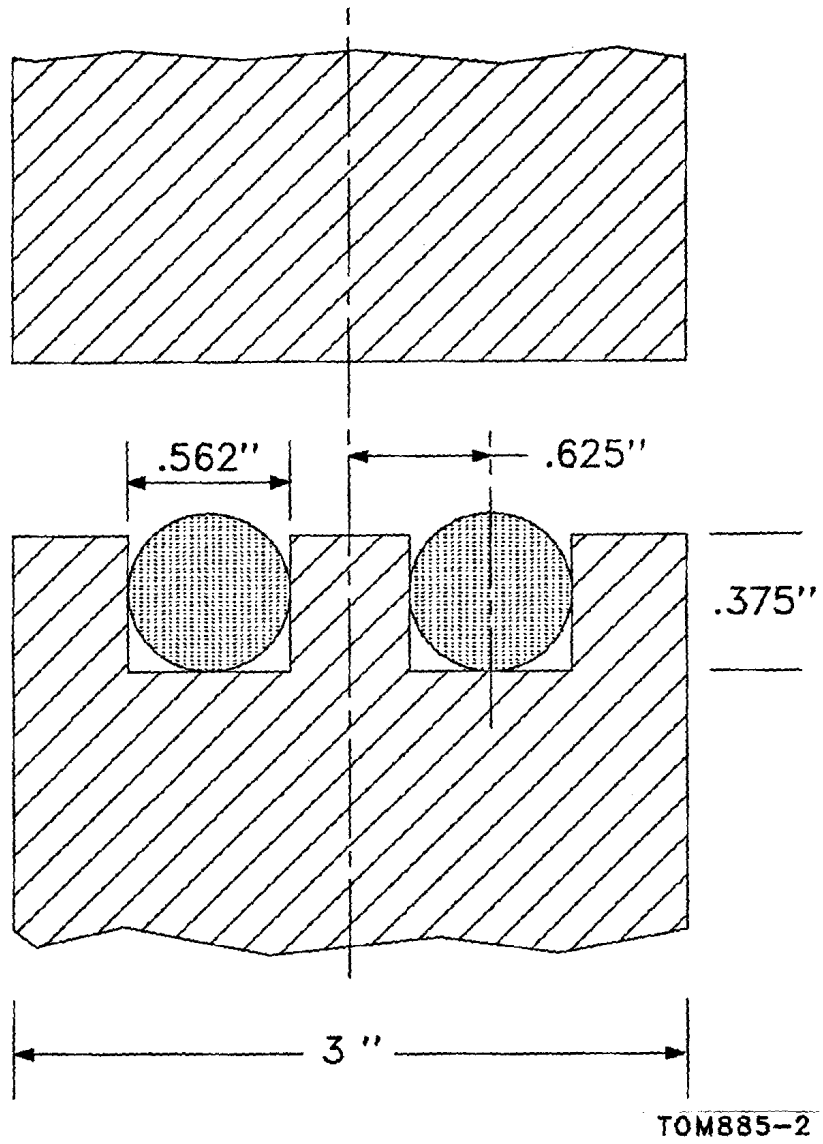

Figure 2. Double O-Ring Seal Design

cross-sectional diameter are used with this type of design. Dovetail grooves are commonly used; however, standard O-ring face grooves for 1/2-in. diameter O-rings were tested. This seal design provides a seal compression consistent with the testing Sandia is currently performing with 1/4-in. diameter O-rings. It is important to be able to correlate the two sets of test results, since Sandia testing includes irradiation aging and testing with both steam and dry air.

The double gumdrop design tested is as shown in Figure 3. The seals for the pressure unseating tests were made of Type W neoprene with a specified hardness of 60 durometer. The seals for the pressure seating tests were made of EPDM compound E603 with a specified hardness of 60 durometer. The double gumdrop design is similar to the double tongue-and-groove design in that it is a fairly typical design with only slight variations.

The test matrix (see Table 1) shows all the seal parameters tested for both closures.

Since pressure on a penetration closure may cause flange rotation this was a consideration in testing. Rotation was simulated by machining one of the test flange faces to effect an angle between the two mating surfaces. This will be referred to as flange rotation in subsequent discussions. Bolt preloads were always greater than pressure loading, so metal-to-metal contact was always preserved whether flange to shim to flange or flange to flange. Flange bolting consisted of six bolts torqued to 300 ft-lb each. When flange spacing was used, three equally spaced shims were used.

The intent at the beginning of the project was to perform the tests with flange rotation without flange separation. After completing Tests 5 and 6 and 9 through 12, it was apparent that the timing of the seal failures and leak rates were being controlled primarily by the metal-to-metal line contact. As can be seen in Figure 4, a flange rotation without any flange separation results in a metal-to-metal line contact depending on the flatness of the flange. Tests were performed with the test flanges without any seals, and the leak rate was not appreciably affected. It was then decided that the remainder of the tests with flange rotation should be conducted with a flange separation so the effects of temperature and pressure on the elastomer seals could be better determined. The seals were tested for severe accident conditions, at 160 psig pressure and temperatures to 700°F or until seal failure, whichever occurred first. The seals were thermally aged by holding them in the test configuration at 300°F for 168 h.

Before testing began the actual seal hardness was determined upon receipt for each type of seal. The hardness test was performed at three locations for each seal type. The hardness values obtained are listed in Table 2, along with the mean value.

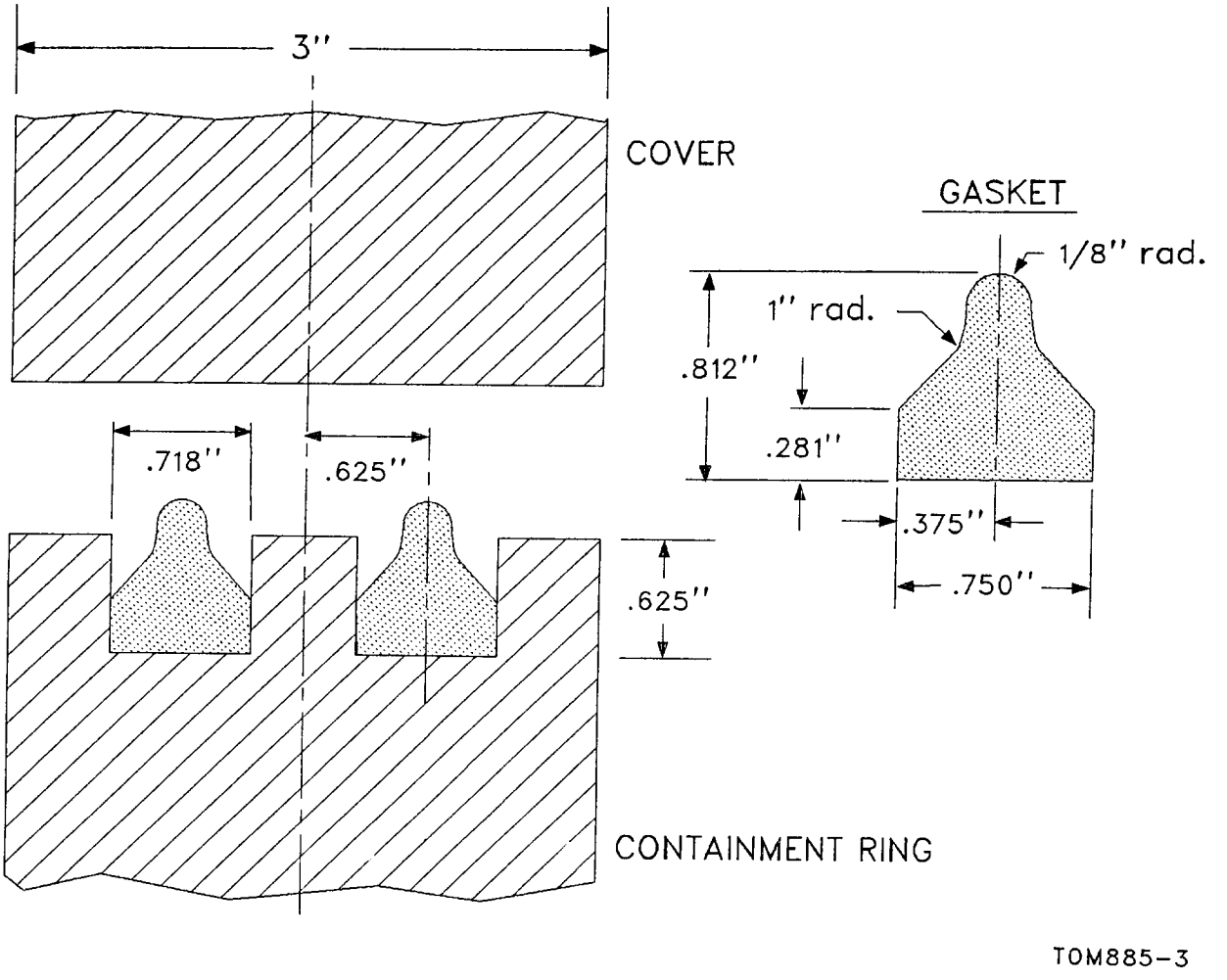

Figure 3. Double Gumdrop Seal Design

Table 1

Seal Test Matrix

Seal Tests Without Flange Rotation

Test[a] Number	Seal[b] Design	Seal Material	Thermally Aged	Flange Rotation (°)	Flange Separation (in.)
1 (1)	DTG	Silicone rubber 40 durometer	Yes	0	0.060
2 (7)	DGD	Neoprene Type W 60 durometer	No	0	0.094
3 (6)	DGD	Neoprene Type W 60 durometer	Yes	0	0.094
4 (3)	DOR	Neoprene Type W 40 durometer	Yes	0	0.063

Table 1 (continued)

Seal Tests with Flange Rotation

Test[a] Number	Seal[b] Design	Seal Material	Thermally Aged	Flange Rotation (°)	Flange Separation (in.)
5 (2)	DTG	S.R.	No	3	None
6 (4)	DTG	S.R.	Yes	3	None
7 (12)	DGD	EPDM	No	3	0.010
8 (11)	DGD	EPDM	Yes	3	0.010
9 (10)	DOR	EPDM	No	3	None
10 (9)	DOR	EPDM	Yes	3	None
11 (5)	DTG	S.R.	No	6	None
12 (8)	DTG	S.R.	Yes	6	None
13 (22)	DGD	EPDM	No	6	0.010
14 (21)	DGD	EPDM	Yes	6	0.010
15 (15)	DOR	EPDM	No	6	0.010
16 (18)	DOR	EPDM	Yes	6	0.010
17 (14)	DTG	S.R.	No	12	0.010
18 (13)	DTG	S.R.	Yes	12	0.010
19 (17)	DGD	EPDM	No	12	0.003
20 (16)	DGD	EPDM	Yes	12	0.010
21 (19)	DOR	EPDM	No	12	0.003
22 (20)	DOR	EPDM	Yes	12	0.003

[a]Number in parentheses indicates chronological order of that test.
[b]DTG--Double tongue-and-groove design; DGD--Double gumdrop design; DOR--Double O-ring design; S.R.--Silicone rubber 40 durometer; EPDM--E603 60 durometer.

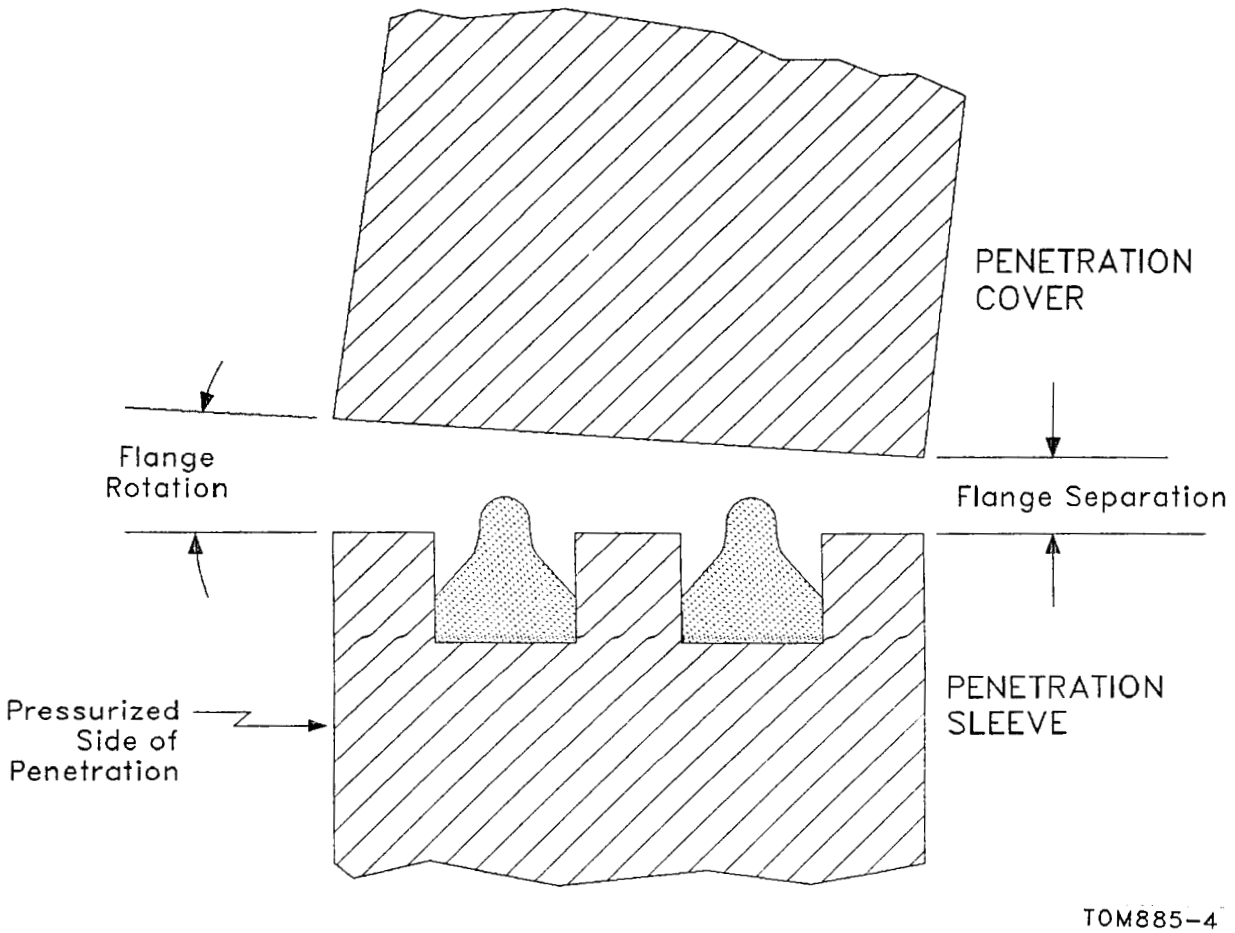

Figure 4. Flange Separation and Rotation

Table 2

Seal Hardness Values

Seal Type	First Value	Second Value	Third Value	Mean Value
Silicone rubber	37	38	34	36.3
Neoprene O-ring	37	39	37	37.7
EPDM O-ring	59	55	55	56.3
EPDM gumdrop[a]	58 55	59 53	59 54	56.3
Neoprene gumdrop[a]	50 51	54 53	51 53	52.0

[a]Two gumdrop seals were tested.

5.0 DESCRIPTION OF TEST APPARATUS

The test apparatus is as shown schematically in Figure 5. With the exception of the nitrogen supply, the test apparatus was located in the high-bay building of ARA III at the INEL. The nitrogen supply trailer was located just outside the building. Two turbine flow meters (1/2 and 1-in. size) mounted in parallel with manual valves allowed for measurement of flow up to 10 cfm (actual) for steady-state conditions. Temperature and pressure sensors upstream from the turbine meters provided the necessary data to convert the flow rates to standard conditions. A pneumatic-actuated pressure control valve downstream from the turbine meters maintained the seal test pressure at 160 psig. A safety pressure relief valve with a pressure relief setting of 200 psig was located downstream of the pressure control valve. A manual block valve downstream from the pressure relief valve provided a means of isolating the test fixture for determining seal leak rates that were too low to be measured by the turbine meters. Using the gas test volume and changes in the gas temperature and pressure, the seal leak rate was calculated using gas law relationships. Temperature and pressure-monitoring instrumentation provided the necessary gas test temperature and pressure data.

The test fixture for each seal design tested consisted of an upper and a lower flange with the test seals placed between the two flanges. The flanges for the DTG tests were machined from 18-in., 900-lb rated reducing flanges. The DOR and DGD test flanges were machined from 14-in., 1500-lb rated reducing flanges. A flange mating surface specification of 125 finish was used. The flange material was Type 304 stainless steel. (Detailed drawings of the test flanges are contained in Appendix A.) Electric resistance heaters placed at the outer diameter of the test flanges provided the heat source for the tests.

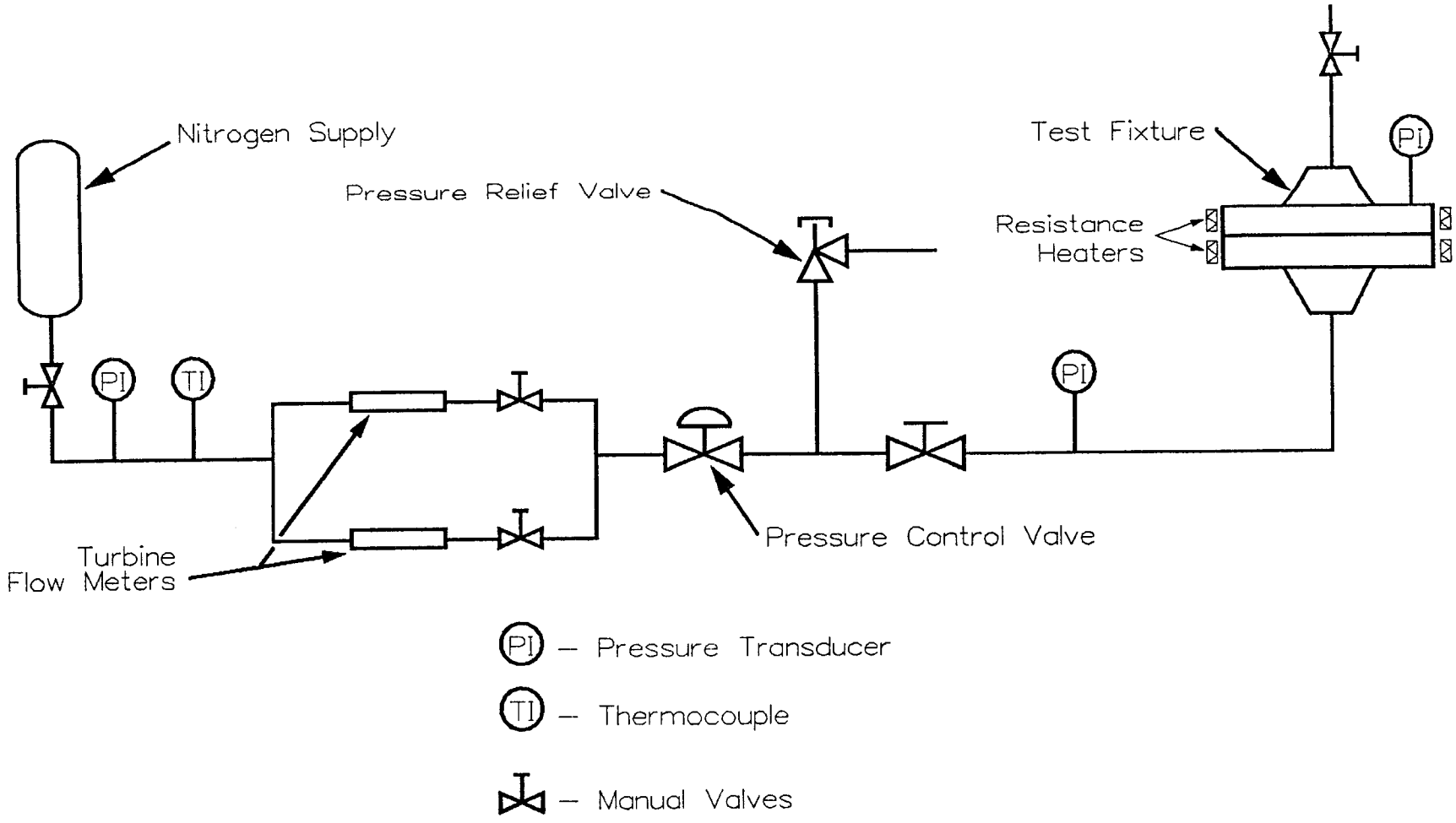

Figure 5. Schematic Diagram of Seal Test Apparatus

Figure 6 is a photo of the DTG test fixure assembled and instrumented. Insulation blankets were placed over the test fixtures, as shown in Figure 7, to provide test temperature conditions as uniform as possible. The test flanges were instrumented with Type K (chromel-alumel) thermocouples to provide detailed temperature data, especially for the region near the seals. Figure 8 shows the thermocouple locations for the DTG flanges, and Figure 9 shows the thermocouple locations for the DOR and DGD test flanges. Flange temperatures were assumed to be axisymmetric. A thermocouple was also located in the void between the flanges to provide temperature data for the nitrogen gas. A pressure transducer was located between the seals to determine when the first seal failed.

Both strip chart recorders and computer data acquisition program (SCANN) recorded the test data. Test and annulus pressure and the lower flange temperature between the seals (thermocouple location B3) were recorded on strip charts; the computer program recorded all the temperature, pressure, and flow data channels. The scan interval was varied from 30 min to 30 s, depending upon the particular test activity. SCANN contains up to six polynomial coefficients for each data channel to convert the data channel reading in millivolts to engineering units, recording and storing both values according to the user's request. For these tests, the data were stored both on computer file and hard copy.

In addition to the data recording devices, visual instrumentation indicators were present for temperature, pressure, and flow. Each of the three pressure-sensing locations had a pressure gauge for visual observation. A digital frequency counter provided visual indication of flow. A digital thermometer for the lower flange seal temperature (thermocouple location B3) provided a visual indication of the seal test temperature. The controllers for the resistance heaters contained a visual indicator of the heater temperature. The computer CRT and printer were located adjacent to the test apparatus to allow visual observation of all the data.

6.0 DESCRIPTION OF TESTING PROCEDURES

The objective of this project was to test containment penetration seals under severe accident temperature and pressure conditions. As stated previously, the test pressure was 160 psig and the maximum test temperature of interest was 700°F. Before pressure testing began thermal aging of the seals consisted of heating the seals in the test flanges to 300°F and holding them at that temperature for 7 days (168 h). Detailed test procedures are found in Appendix B.

The testing procedure changed somewhat as the project proceeded. The original intent for the pressure-unseating tests (Tests 1 through 4) was to determine leak rates as a function of flange separation. However, during the first test, a considerable amount of seal degradation was observed to be occurring as a result of separating the test flanges and changing the flange separation. As

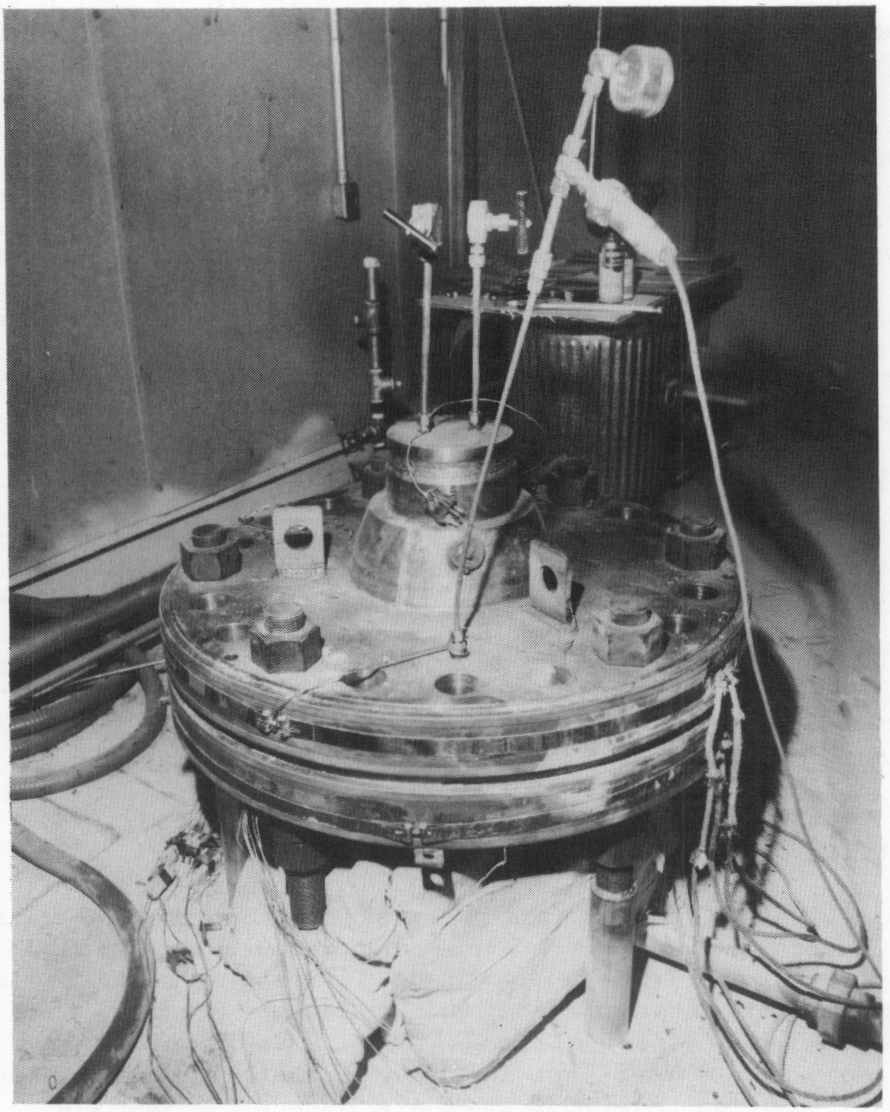

Figure 6. Uninsulated DTG Test Fixture

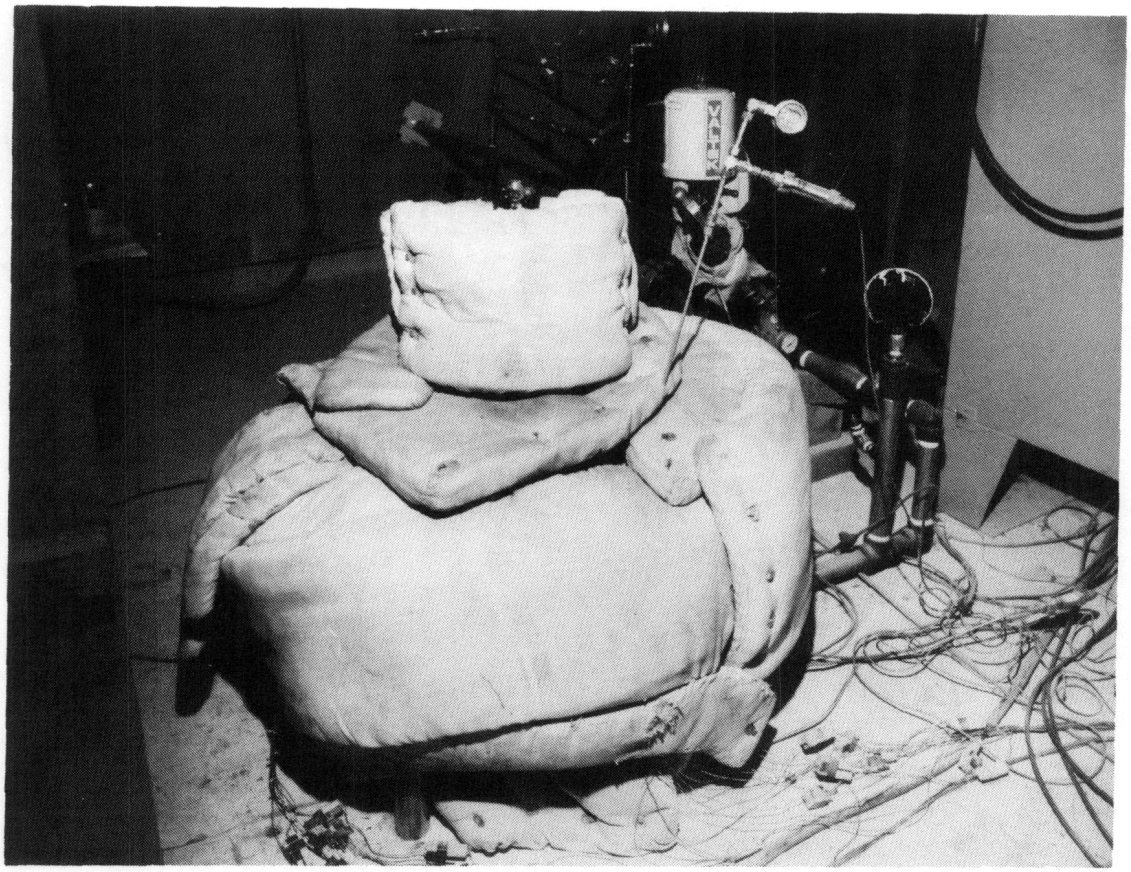

Figure 7. Insulated Test Fixture

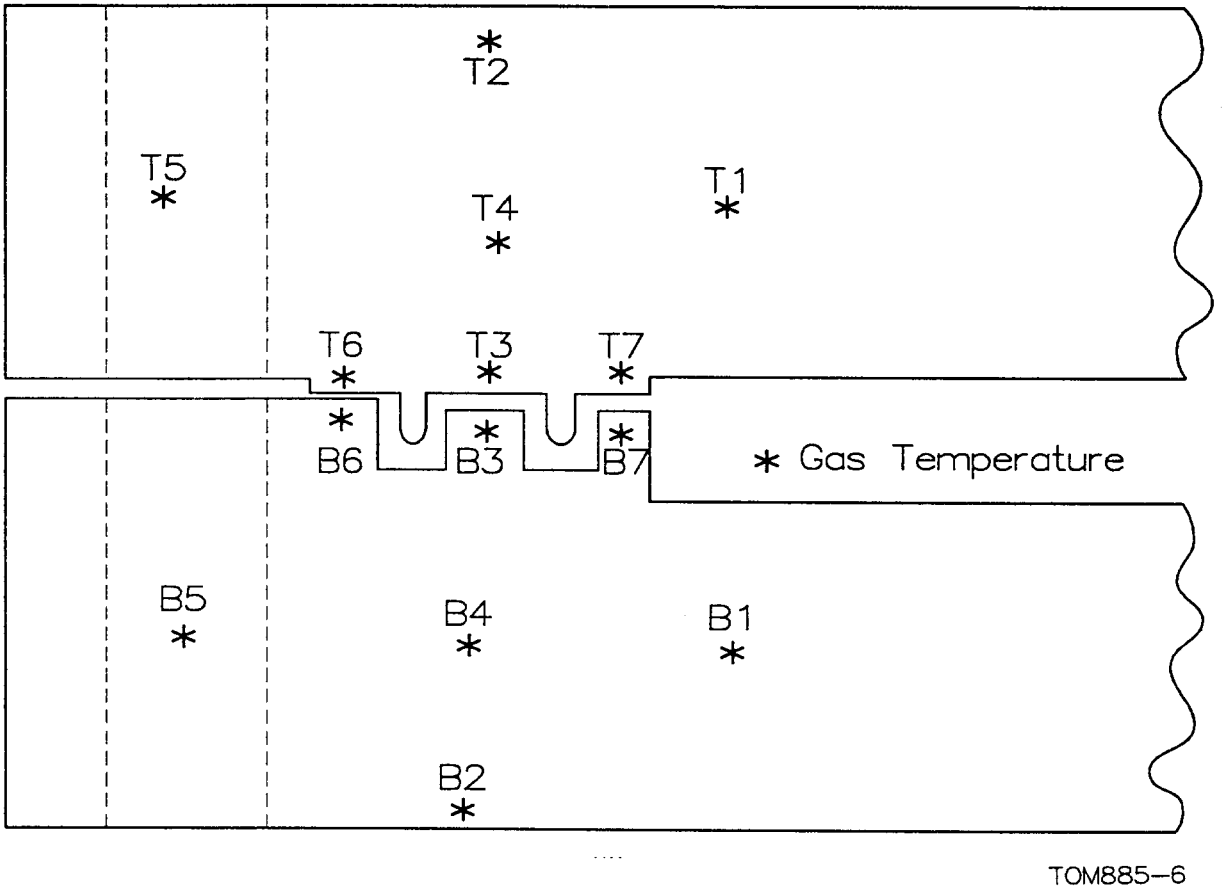

Figure 8. Thermocouple Locations for DTG Tests

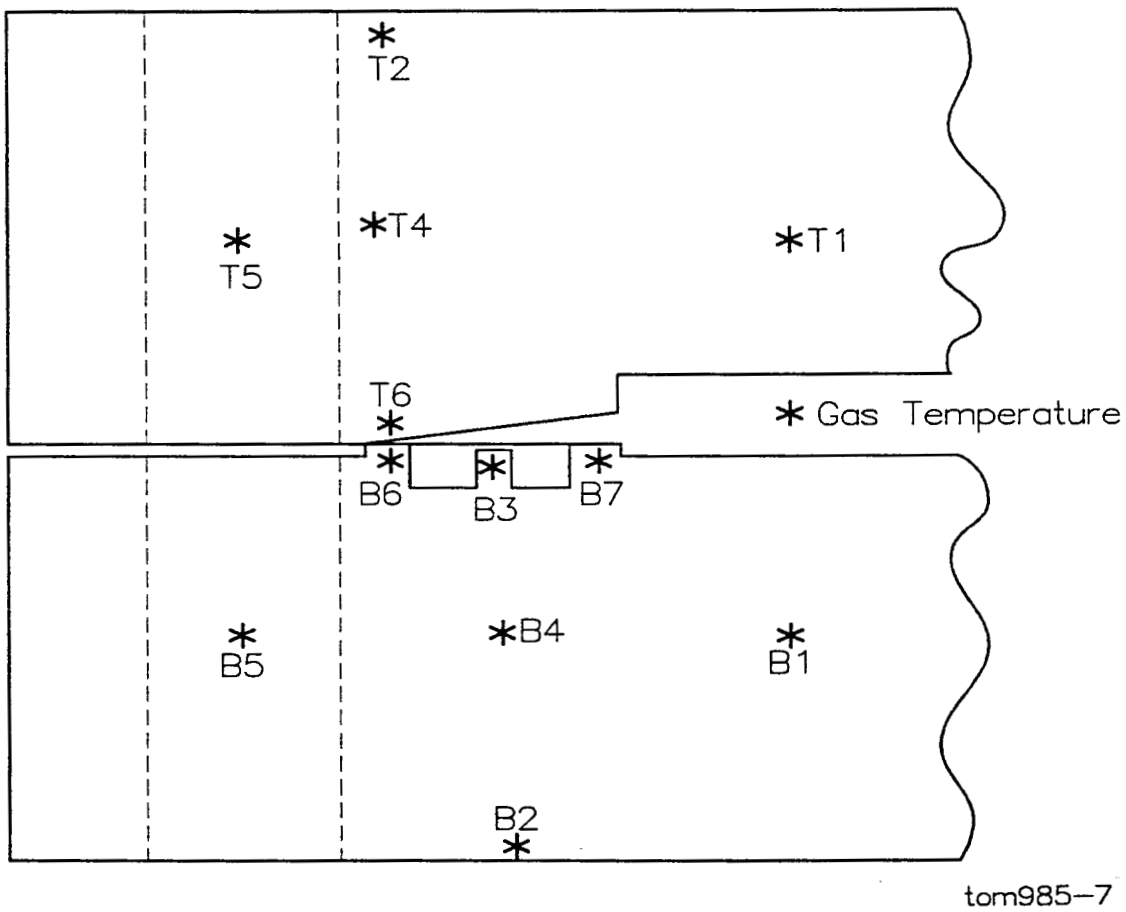

Figure 9. Thermocouple Locations for DOR and DGD Tests

a result of this observation, it was decided that the remaining three pressure-unseating tests (Tests 2 through 4) would be performed with a single flange separation equal to one half of the full seal compression without any separation.

The second significant change in the testing procedure occurred after the completion of Tests 1 and 5. (It should be noted here that tests were not conducted in numerical order. Tests 1 and 5 were the first two tests conducted. This was done to maximize efficiency in terms of test setup, aging, and flange machining.) The original test requirements specified raising the seal to 360°F and holding this test temperature for 8 to 16 h then increasing the seal temperature to 700°F or until the seal failed, whichever occurred first. Using this procedure, the test data indicated significant temperature gradients between the two seals. Since the resistance heaters were located on the test flange outer diameters, a thermal gradient between the inner and outer seals must exist as the seal test temperature was increased. To reduce the temperature differences between the seals, the following changes in procedure were incorporated:

1. When the seal temperatures reached 500°F, 600°F, and 700°F, the test temperature of the seals was held constant for 2 h.

2. The heatup rate between these test temperatures was limited to 50°F/h.

3. The insulation below the lower test flange was improved.

4. Stainless steel wool was placed in the test flange inner cavity to reduce natural convection currents.

After the above changes were made, the temperature difference between thermocouples at B6 and B7 (see Figure 8) ranged from about 10 to 15 degrees.

The third procedural change occurred after the completion of flange pressure-seating Tests 5 and 6 and 9 through 12 with no flange separation. This zero separation condition would normally occur for the pressure-seating case, assuming perfectly flat machined flange faces and no out-of-plane distortions of either flange from the pressure loading. From the results of the tests performed with no flange separation, it was apparent that leak rates and failure temperatures of the seals were being controlled primarily by the line metal-to-metal contact between the upper and lower flanges. This was verified by testing the flanges without any seals; the leak rate was determined to be of the same order of magnitude. It was therefore decided that the remainder of the pressure-seating tests would be performed with a small flange separation, so more meaningful information could be obtained with regard to the time and temperature of failure of the seal materials.

The procedure for thermal aging the seals was to age the seals in the test flange with the flange separation and rotation the same as for the test. An exception to this was for Test 10, where the seals were aged with a flat (zero rotation) top flange and no flange separation. As a result of this aging procedure, the seal compression set from aging was sufficient that there was no seal compression for the 3° top test flange and a seal could not be achieved for the test. It was therefore decided that the remaining thermal aging would be performed with the flange separation and rotation the same as for the test conditions. If thermal aging does take place before separation and/or rotation, the preaging may well preclude an effective seal after separation and rotation.

7.0 TEST RESULTS

The temperature at which the seals failed and other pertinent test parameters for each seal design and material are provided in Tables 3 through 7. Seal compression values shown are the result of calculations based on flange separation, flange rotation, seal diameters, and the known geometry of the flanges. Failure temperatures shown are based on the temperature of thermocouple B3 at the initiation of detected leakage. For cases where failure temperature is shown as greater than 700°F, the test was terminated at that temperature without detectable leakage. Mean failure temperature is the average of failure temperatures for that design. Standard deviations are noted even though the number of samples is statistically small.

Based on the seal failure temperatures, the following observations are made:

1. The seal failure temperature for the double tongue-and-groove design with silicone rubber seals is in excess of 700°F with a pressure of 160 psig.

2. The mean failure temperature for the double gumdrop design with EPDM seals was 630°F.

3. The mean failure temperature of the double O-ring design with EPDM seals was 600°F.

4. The mean failure temperature of the neoprene seals (Tests 2, 3, 4) was 490°F.

5. Thermal aging had little if any influence on the failure temperatures of the seals.

6. Failure temperatures of the seals decreased slightly with decreasing seal compression.

7. The O-ring design offers an advantage over the gumdrop design in that seal compression is not always a necessary requirement to maintain a seal for O-rings. The results of Test 10 provide an exception to this condition. The O-ring deformation from the

Table 3

Double Tongue-and-Groove Design With Silicone Rubber Seals

Test Number	Flange Rotation (°)	Flange Separation (in.)	Outer Seal Compression (%)	Inner Seal Compression (%)	Failure Temperature (°F)
1	0	0.060	28.7	28.7	610[a]
5	3	0.0	31.4	16.4	>700
6	3	0.0	31.4	16.4	730[b]
11	6	0.0	22.6	None	>700
12	6	0.0	22.6	None	>700
17	12	0.010	2.7	None	>700
18	12	0.010	2.7	None	>700

[a]Seal failure was due to overpressurizing test fixture to 190 psig.
[b]Seals were tested to failure temperature for this test.

Table 4

Double Gumdrop Design With EPDM Seals

Test Number	Flange Rotation (°)	Flange Separation (in.)	Outer Seal Compression (%)	Inner Seal Compression (%)	Failure Temperature (°F)
7	3	0.010	16.2	2.4	650
8	3	0.010	16.2	2.4	600[a]
13	6	0.010	10.5	None	667
14	6	0.010	10.5	None	>700[b]
19	12	0.003	--	None	600[c]
20	12	0.010	None	None	d

[a]Failure occurred at approximately 1 h and 15 min into the 600°F soak.

[b]The seal material flowed in a manner to fill the wedge-shaped void outside of the outer seal and provided a seal through the 700°F test. The failure temperature listed is not a realistic failure temperature for the EPDM seal material.

[c]Failure occurred at approximately 1 h into the 600°F soak.

[d]Lost test pressure at approximately 6 h into the 360°F soak. This is not an indication of the seal material failure temperature, since the combination of the flange rotation and separation resulted in no seal compression for either seal. The initial seal could only have been the result of the seals not being bottomed in the seal grooves.

Table 5

Double O-Ring Design With EPDM Seals

Test Number	Flange Rotation (°)	Flange Separation (in.)	Outer Seal Compression (%)	Inner Seal Compression (%)	Failure Temperature (°F)
9	3	0.0	15.8	None	a
10	3	0.0	15.8	None	b
15	6	0.010	4.6	None	600[c]
16	6	0.010	4.6	None	628
21	12	0.003	None	None	580
22	12	0.003	None	None	577

[a]The test pressure was maintained through the 700°F test, but as a result of the combination of the metal-to-metal seal and flow of the seal material, this test did not provide an indication of the true failure temperature of the seals.

[b]These seals were thermally aged with no flange rotation or separation. The compression set from the aging portion of the test was sufficient that the seals would not maintain a seal.

[c]Significant seal leakage started at approximately 15 min into the 600°F soak. Complete seal failure occurred at the end of the 2-h 600° soak.

Table 6

Double Gumdrop Design With Neoprene Seals

Test Number	Flange Rotation (°)	Flange Separation (in.)	Outer Seal Compression (%)	Inner Seal Compression (%)	Failure Temperature (°F)
2	0	0.094	11.5	11.5	460
3	0	0.094	11.5	11.5	500[a]

[a]Seal failure occurred just as the seal temperature (location B3) reached 500°F.

Table 7

Double O-Ring Design With Neoprene Seals

Test Number	Flange Rotation (°)	Flange Separation (in.)	Outer Seal Compression (%)	Inner Seal Compression (%)	Failure Temperature (°F)
4	0	0.063	12.4	12.4	500[a]

[a]Leak occurred at the end of the 2-h 500°F soak.

thermal aging for Test 10 was such that the O-rings would rise out of the seal grooves to provide a seal, as was the case for Tests 21-22 and previous tests (Reference 1).

Figure 10 is a photograph of the silicone rubber seals after the completion of Test 6. As can be seen, a considerable amount of seal thermal degradation was present. The photographed region is the location where the seal failed at approximately 730°F.

Tables 8 through 12 provide seal leak rates as a function of seal temperature and some leak rates after failure of the seals. These leak rates were calculated using gas law relationships with no flow of nitrogen into the test fixtures.

The following observations are noted from the leak rates determined prior to failure of the seals:

1. The seepage leak rates increase with increased flange rotation and decreased seal compression or increased separation.

2. The seepage leak rate generally was not a function of temperature except just prior to seal failure.

3. Thermal aging of the seals did not result in a significant change in the seepage leak rates.

The seal leak rates calculated after seal failure vary considerably and should be used with extreme caution, based on the following considerations:

1. The method of calculating the leak rate using gas law relationships is not very reliable considering its sensitivity to input data. The seepage calculations for Test 16 at 600°F were redone by first varying the final test pressure by 1% then by varying the final test temperature by 1%. The change in leak rate was 13% for the change in pressure and 7% for the change in temperature. Depending on actual leak rates, this technique may be more or less sensitive than this example.

2. Test conditions were different from severe accident conditions in that room-temperature nitrogen was the pressure source rather than steam. The nitrogen would tend to cool the seals at a leak, whereas steam would provide a heat source.

3. The seal failure leak rates are largely a function of flange separation in combination with the seal design. Therefore, prior to using the leak rates tabulated, one must consider the flange separation at which that leak rate occurred.

4. Leak rates tend to increase rapidly after the seals initially fail, as is shown by the two values for Tests 2 and 3. The first values were determined by the seepage method as the leaks first developed, and the second values were obtained using the turbine meter flow rates within minutes of the initial leak.

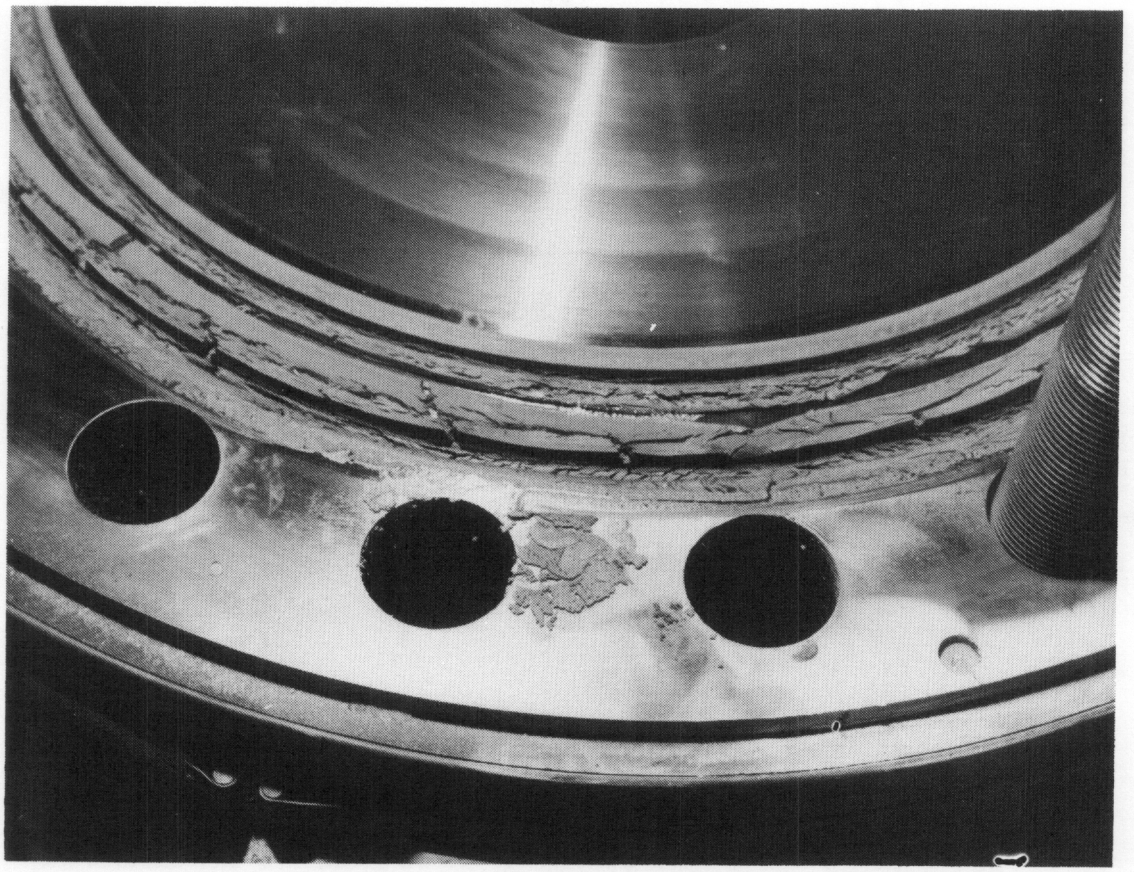

Figure 10. Silicone Rubber Seals at Completion of Test 6

Table 8

Leak Rates for DTG Design With SR Seals[a]

Test No.	360°F	500°F	600°F	700°F	Failure
1	0	0	4.38E-5	PFT[b]	1.0E-1
5	0	1.94E-5	3.27E-5	PFT	--
6	7.37E-5	6.69E-4	2.77E-5	1.12E-5	2.96E-3
11	0	8.15E-4	1.15E-3	1.24E-3	BMR[b]
12	0	6.35E-4	8.95E-4	8.73E-4	BMR
17	2.14E-3	2.18E-3	2.15E-3	2.01E-3	BMR
18	1.66E-3	1.53E-3	1.70E-3	1.85E-3	BMR

[a]Seal leak rates--standard cubic feet per minute per inch of seal circumference (63.62 in).
[b]PFT--past failure temperature; BMR--beyond measuring range.

Table 9

Leak Rates for DGD Design With EPDM Seals[a]

Test No.	360°F	500°F	600°F	700°F	Failure
7	1.84E-5	4.81E-6	6.72E-6	PFT[b]	6.62E-2
8	1.30E-5	1.30E-5	2.42E-4	PFT	9.5E-1[c]
13	2.29E-4	2.29E-4	2.74E-4	PFT	5.56E-2
14	3.29E-4	3.12E-4	2.42E-4	5.21E-4	BMR[b]
19	1.87E-3	1.78E-3	1.42E-3	PFT	6.0E-1[a]
20	1.80E-3	PFT	PFT	PFT	BMR

[a]Seal leak rates--standard cubic feet per minute per inch of seal circumference (55.76 in).
[b]PFT--past failure temperature; BMR--beyond measuring range.
[c]Leak rate was determined from turbine meter reading.

Table 10

Leak Rates for DOR Design With EPDM Seals[a]

Test No.	360°F	500°F	600°F	700°F	Failure
9	6.33E-4	7.04E-4	6.33E-4	4.76E-4	BMR[b]
10	PFT[b]	PFT	PFT	PFT	BMR
15	3.93E-4	5.89E-4	3.07E-3	PFT	1.0E-1
16	2.14E-4	1.08E-3	1.15E-3	PFT	2.16E-2
21	1.82E-3	1.81E-3	PFT	PFT	1.48E-1
22	1.84E-3	1.93E-3	PFT	PFT	6.7E-1[c]

[a]Seal leak rates--standard cubic feet per minute per inch of seal circumference (55.76 in).
[b]PFT--past failure temperature; BMR--beyond measuring range.
[c]Leak rate was determined from turbine meter reading.

Table 11

Leak Rates for DGD Design With Neoprene Seals[a]

Test No.	360°F	500°F	600°F	700°F	Failure
2	7.6E-5	PFT[b]	PFT	PFT	2.33E-2 4.1E-1[c]
3	1.26E-4	PFT	PFT	PFT	1.30E-2 6.3E-1[c]

[a]Seal leak rates--standard cubic feet per minute per inch of seal circumference (55.76 in).
[b]PFT--past failure temperature.
[c]Leak rate was determined from turbine meter reading.

Table 12

Leak Rate for DOR Design With Neoprene Seals[a]

Test No.	360°F	500°F	600°F	700°F	Failure
4	1.85E-3	1.93E-3	PFT	PFT	>6.0E-1[a]

[a]Seal leak rates--standard cubic feet per minute per inch of seal circumference.
[b]PFT--past failure temperature.
[c]Leak exceeded 1/2-in. turbine meter flow capacity.

This condition would probably be more severe for a steam environment. In general the seal failure leak rates determined using the seepage leak rate method should be considered lower-bound values. A test was performed for the double tongue-and-groove design with no seals, and the leak rate for this condition was determined to be 1.87E-02 scfm/in. This could be considered for use as an upper-bound value, assuming that the flatness of the test flanges is consistent with that for containment mechanical penetration closures. Considering the small size of the test flange relative to large containment penetration closures, the leak rate determined by the test is probably an underestimate for an upper-bound value.

8.0 CONCLUSIONS

The leakage behavior for three seal designs commonly used for containment mechanical penetrations has been determined. The temperature range at which failure of elastomer seals can be expected is as follows:

Seal Design	Seal Material	Failure Temperature
Double tongue and groove	Silicone rubber	>700°F
Double gumdrop	EPDM	600-670°F
Double gumdrop	Neoprene	460-500°F
Double O-ring	EPDM	570-630°F
Double O-ring	Neoprene	500°F

The effects of flange rotation and thermal aging on the elastomer failure temperatures were nearly insignificant. The elastomer failure temperatures decreased some with decreasing seal compression.

The effects of flange rotation on seepage leak rates prior to failure of the seals were quite significant. The seepage leak rate varied from 4.8E-6 to 1.9E-3 scfm per inch of seal circumference in varying the flange rotation from 3 to 12 degrees for the three seal

designs tested. The test results indicate strongly that the seepage leak rate is influenced by the seal compression. The seepage leak rate was not significantly influenced by temperature or thermal aging of the seals.

The leak rate after failure of the seals varies primarily with flange separation. The leak rate was determined to be 1.87E-2 scfm/in. for the double tongue-and-groove design with no seals. The maximum measured leak rate from these tests was 0.63 scfm/in., which was for the double gumdrop design with a flange separation of 0.094 in.

These conclusions should be used recognizing their limitations, since the effects of a steam environment and radiation aging must be considered before applying results to containment penetrations. Both of these effects will be evaluated in the remainder of this program being performed at Sandia.

9.0 REFERENCES

1. B. L. Barnes, "Containment Penetration Elastomer Seal Test," Proceedings of the Second Workshop on Containment Integrity, NUREG/CP-0056, SAND84-1514, Sandia National Laboratories, Albuquerque, NM, August 1984, pp. 345-358.

2. R. F. Kulak, B. J. Hsieh, J. E. Ash, J. M. Kennedy, G. A. McLennon, Y. C. Pan, Structural Response of Large Penetrations and Closures for Containment Vessels Subjected to Loadings Beyond Design Basis, NUREG/CR-4064, SAND84-7177, ANL-84-41, Sandia National Laboratories, Albuquerque, NM, February 1985.

3. M. H. Shackelford, T. R. Bump, R. W. Seidensticker, Characterization of Nuclear Reactor Containment Penetrations, NUREG/CR-3855, SAND84-7139, ANL-84-87, Sandia National Laboratories, Albuquerque, NM, February 1985.

APPENDIX A

TEST FIXTURE DRAWINGS

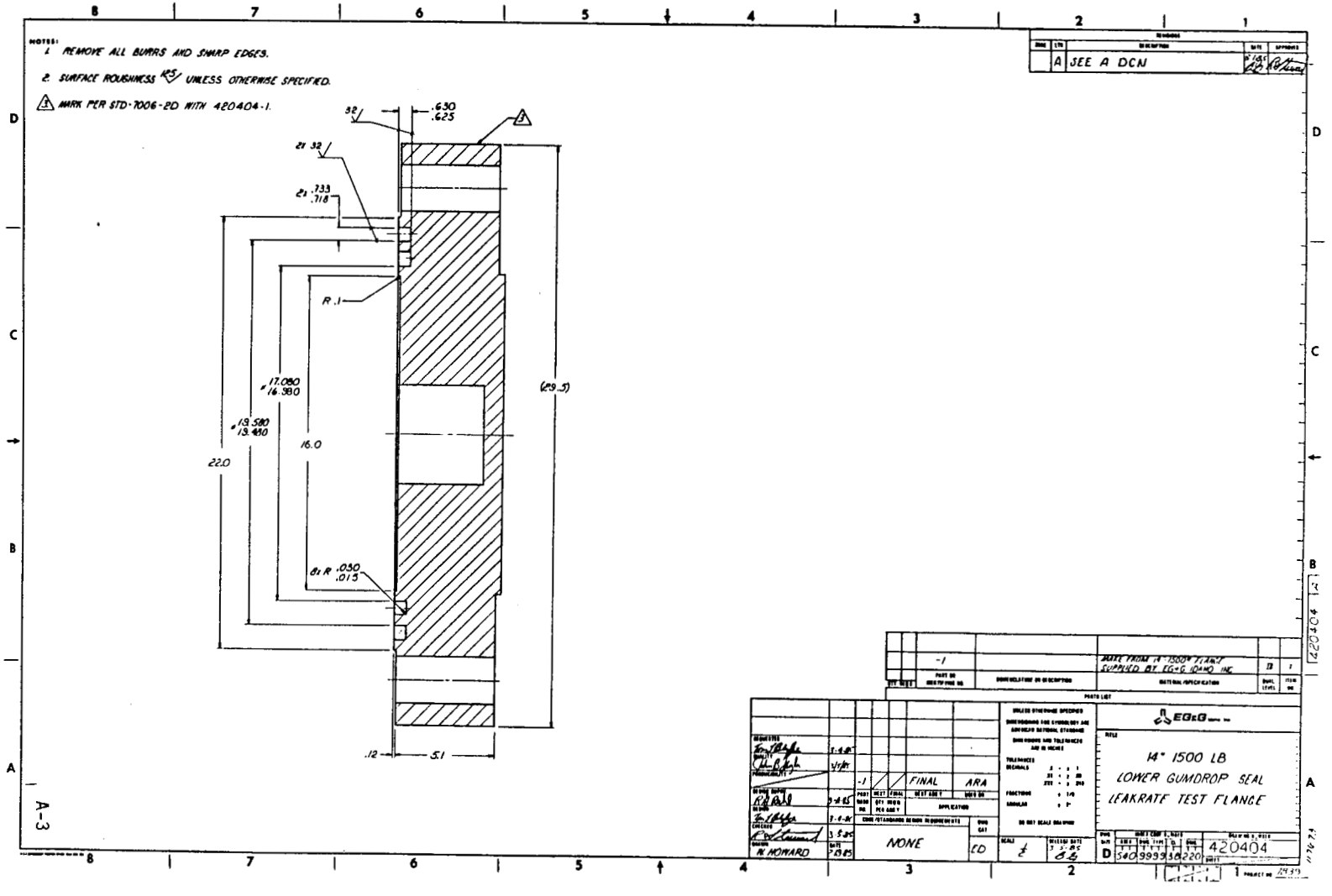
NOTES:
1. REMOVE ALL BURRS AND SHARP EDGES.
2. SURFACE ROUGHNESS 125 UNLESS OTHERWISE SPECIFIED.
3. MARK PER STD-7006-20 WITH 420404-1.
32
.630
.625
2x 32
2x .733
.718
R .1
17.080
16.980
19.580
19.480
16.0
22.0
(29.5)
8x R .050
.015
.12
5.1
A SEE A DCN
-1
MARK FROM 14" 1500# FLANGE SUPPLIED BY EG&G IDAHO INC.
EG&G
14" 1500 LB
LOWER GUMDROP SEAL
LEAKRATE TEST FLANGE
FINAL
ARA
NONE
LD
1/4
D
540999318220
420404
N. HOWARD
A-3

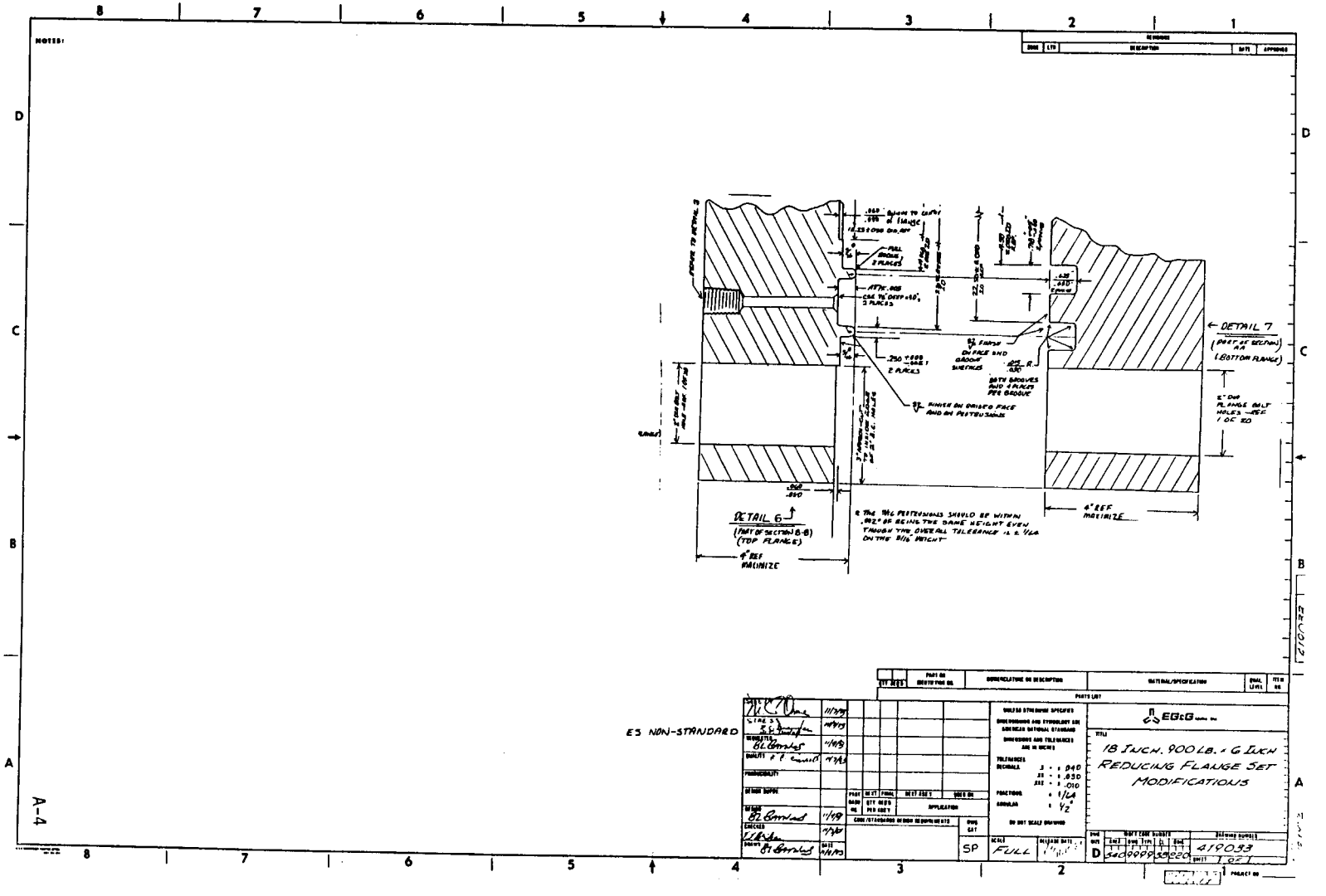
NOTES:
DETAIL 6
(PART OF SECTION B-B)
(TOP FLANGE)
DETAIL 7
(PART OF SECTION AA
(BOTTOM FLANGE)
6" REF MAXIMIZE
4" REF MAXIMIZE
18 INCH, 900 LB. x 6 INCH
REDUCING FLANGE SET
MODIFICATIONS
EGeG
ES NON-STANDARD
SP
FULL
D
419093
A-4

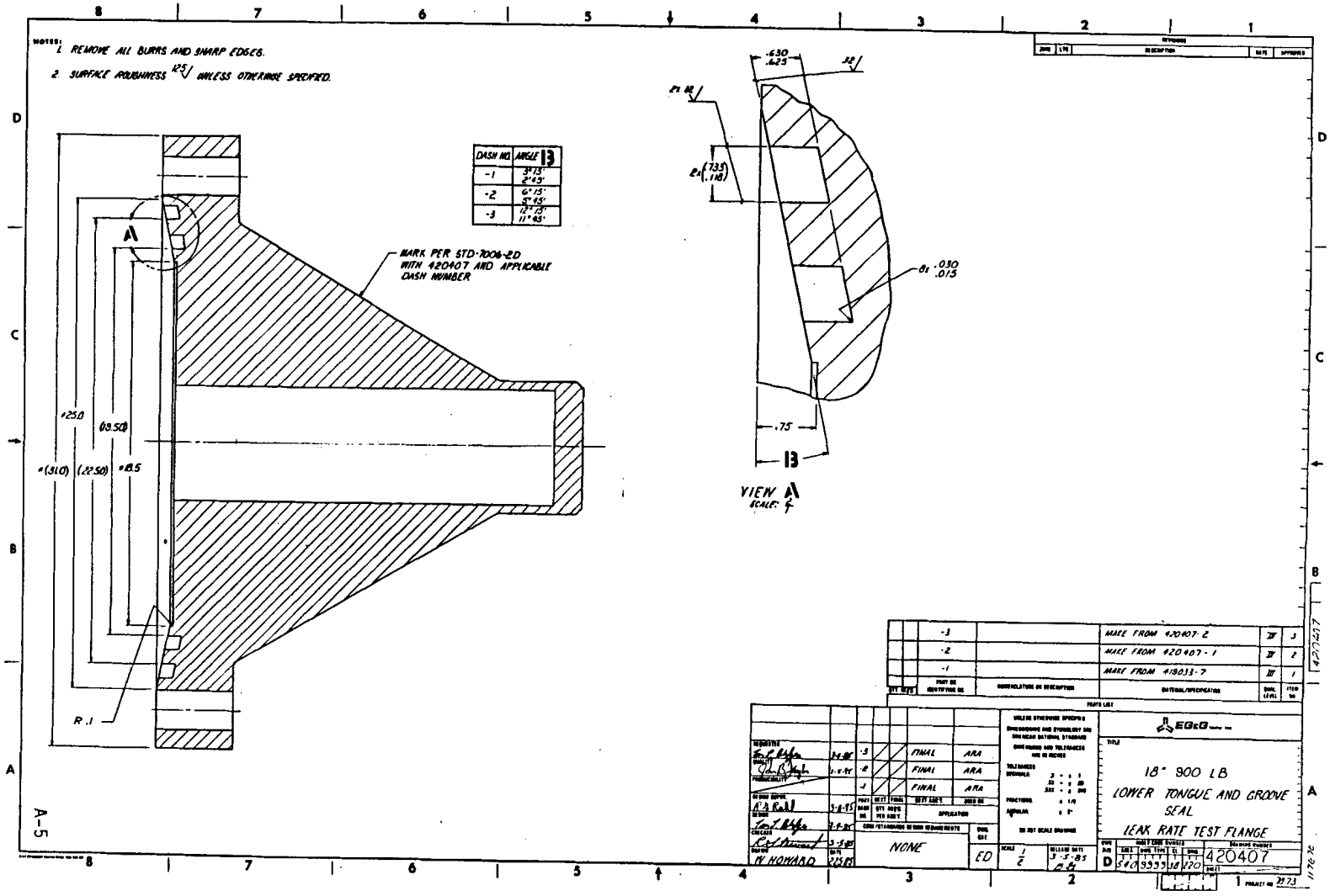
NOTES:
1. REMOVE ALL BURRS AND SHARP EDGES.
2. SURFACE ROUGHNESS 125√ UNLESS OTHERWISE SPECIFIED.
DASH NO. | ANGLE B
-1 | 3°15' 2°45'
-2 | 6°15' 5°45'
-3 | 12°15' 11°45'
MARK PER STD-7006-2D WITH 420407 AND APPLICABLE DASH NUMBER
VIEW A
SCALE: 4
R .1
PARTS LIST
MAKE FROM 420407-2
MAKE FROM 420407-1
MAKE FROM 418033-7
EG&G
18" 900 LB
LOWER TONGUE AND GROOVE SEAL
LEAK RATE TEST FLANGE
420407
NONE
FINAL
ARA
A-5

NOTES:
1. REMOVE ALL BURRS AND SHARP EDGES.
2. SURFACE ROUGHNESS 125 UNLESS OTHERWISE SPECIFIED.

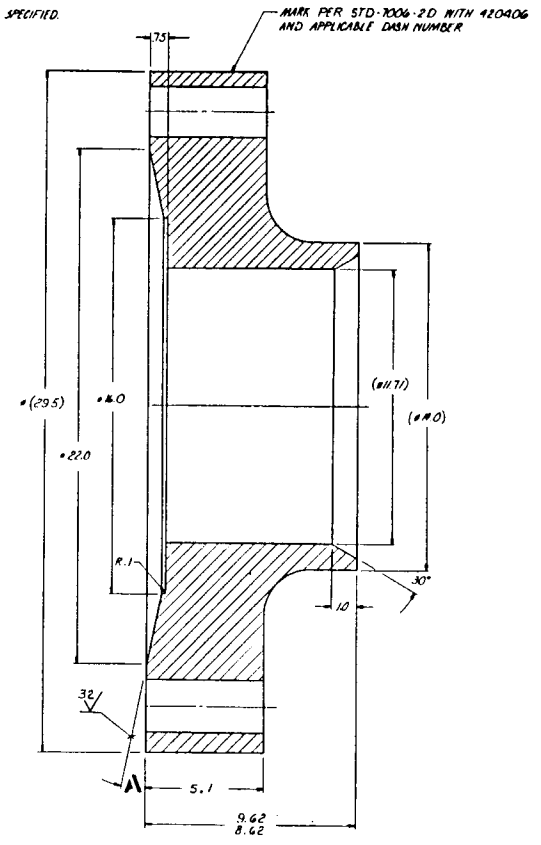

DASH NO	ANGLE A
-1	——
-2	3° 15' 2° 45'
-3	6° 15' 5° 45'
-4	12° 15' 11° 45'

ITEM NO	PART OR IDENTIFYING NO.	NOMENCLATURE OR DESCRIPTION	MATERIAL/SPECIFICATION	DWG LEVEL	ITEM NO
	-4		MAKE FROM 420406-3	III	4
	-3		MAKE FROM 420406-2	II	3
	-2		MAKE FROM 420406-1	II	2
	-1		MAKE FROM 14" 1500# FLANGE SUPPLIED BY EG&G 10 APR 1984	III	1

PARTS LIST

4			FINAL	ARA
3			FINAL	ARA
2			FINAL	ARA
-1			FINAL	ARA

PART NUMBER | NEXT ASSY | FINAL ASSY | NEXT ASSY | DWG NO
QTY REQ PER ASSY | APPLICATION

DRAWN 9-4-85 N. NOWARD
DESIGN 9-4-85
CHECKED 9-5-85
ENGRS 9-5-85
MFGRS 9-5-85
PRODUCIBILITY 9-5-85

UNLESS OTHERWISE SPECIFIED DIMENSIONS AND SYMBOLOGY ARE AMERICAN NATIONAL STANDARD
DIMENSIONS AND TOLERANCES ARE IN INCHES
TOLERANCES
DECIMALS .X ± .1 .XX ± .03 .XXX ± .010
FRACTIONS ± 1/8
ANGULAR ± 1°
DO NOT SCALE DRAWING

CODE/STANDARDS DRAWING DIMENSIONS
NONE

DWG CAT ED
SCALE 1/2
RELEASE DATE 3-5-85 RB

EG&G

TITLE
14" 1500 LB
UPPER SEAL
LEAK RATE TEST FLANGE

SIZE D
NAME CODE NUMBER 5 4 0 | DWG TYPE 9 9 9 9 | CL 3 8 | DWG 2 2 0
DRAWING NUMBER 420406
SHEET
PROJECT NO

A-5

NOTES:
1. REMOVE ALL BURRS AND SHARP EDGES.
2. SURFACE ROUGHNESS 125 UNLESS OTHERWISE SPECIFIED
3. MARK PER SD-700G 2D WITH 420405-1.

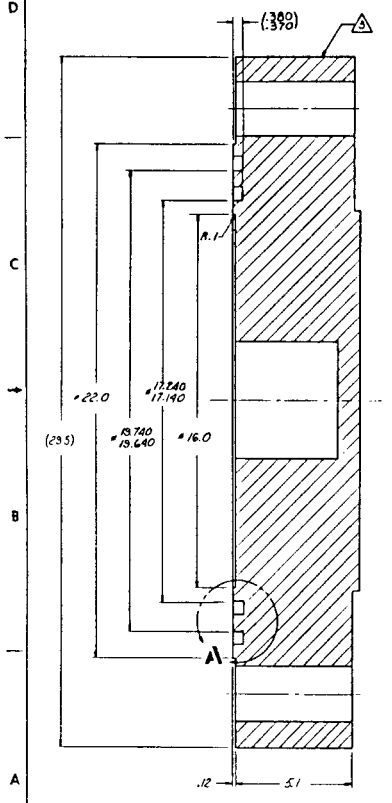

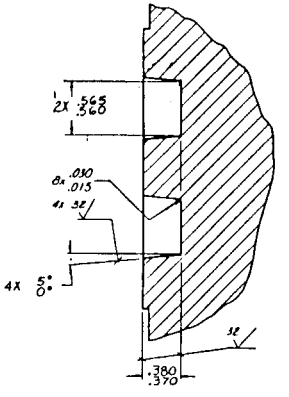

VIEW A
SCALE: 2/1

ZONE	LTR	DESCRIPTION	DATE	APPROVED
	A	SEE A DCN	1-8-85	

ITEM NO	PART OR IDENTIFYING NO.	NOMENCLATURE OR DESCRIPTION	MATERIAL/SPECIFICATION	QUAN.	ITEM NO.
	-1		MADE FROM 14" 1500# FLANGE SUPPLIED BY EG&G IDAHO INC	1	1

PARTS LIST

DESIGNED					
DRAWN	3-4-85				
CHECKED	3-4-85				
ENGR SUPRV	3-4-85				
DESIGN SUPRV	3-4-85				
CHECKED	3-5-85				
DRAWN	DATE 3-7-85	-1	FINAL	ARA	
		PART NO.	NEXT FINAL	NEXT ASSY	USED ON
		DRAW NO.	NEXT NEXT PER ASSY	APPLICATION	
		LOOK/STANDARD DESIGN REQUIREMENTS			
		NONE		CODE CAT. CD	

UNLESS OTHERWISE SPECIFIED DIMENSIONS AND TOLERANCES ARE AMERICAN NATIONAL STANDARD
DIMENSIONS AND TOLERANCES ARE IN INCHES
TOLERANCES: DECIMALS .X ± .1, .XX ± .02, .XXX ± .010; FRACTIONS ± 1/8; ANGULAR ± 1°
DO NOT SCALE DRAWING

EG&G

TITLE
14" 1500 LB
LOWER O-RING SEAL
LEAK RATE TEST FLANGE

SCALE 1/2 | RELEASE DATE 3-4-85 | SIZE D | DRAWING NUMBER 420405

A-7

APPENDIX B

TEST PROCEDURES

SEAL LEAK RATE TEST PROCEDURE

1. RECORD TEST PARAMETERS: DATE ( ), TEST NO. ( ), SEAL DESIGN ( ), SEAL MATERIAL ( ), SEAL HARDNESS ( ), FLANGE ROTATION ( ), FLANGE SEPARATION ( ).

2. IF TESTING AGED SEALS SKIP TO STEP 11.

3. INSTALL TC'S IN TEST FIXTURE.

4. CLOSE ALL BLOCK VALVES.

5. PLACE SEALS IN LOWER FLANGE SEAL GROOVES.

6. TURN ON STRIP CHART RECORDER FOR SEAL TEMPERATURES.

7. NOTE HERE AND ON CHART: DATE ( ), TIME ( ), CHART SPEED ( ), TEST NO. ( ).

8. NOTE PEN COLOR CORRESPONDENCE HERE AND ON CHART: RED ( ) BLUE ( ).

9. CALIBRATE RECORDER AND NOTE ON CHART THE CALIBRATION SCALES.

10. OPEN TOP FLANGE VENT VALVE.

11. PLACE TOP FLANGE ON LOWER FLANGE. FOR TESTS 2-4 PUT SHIMS BETWEEN FLANGES SUCH THAT THE SEAL COMPRESSION IS ONLY HALF WHAT IT WOULD BE WITHOUT SHIMS.

12. TORQUE SIX FLANGE BOLTS TO 300 FT-LBS.

13. CONNECT ALL TC LEADS TO DATA SCANNER.

14. CONNECT PRESSURE TRANSDUCER LEADS TO DATA SCANNER.

15. PERFORM A MANUAL COMPUTER SCAN AND VERIFY THAT ALL THE INSTRUMENTATION READINGS ARE REASONABLE.

16. PERFORM SEEPAGE TEST PER SEEPAGE TEST PROCEDURE.

17. IF LEAKAGE IS DETERMINED TO BE EXCESSIVE, LOCATE AND FIX AS REQUIRED.

18. CONNECT HEATER LEADS.

19. PLACE INSULATION OVER AND AROUND THE TEST FLANGES.

20. REMOVE DANGER TAGS FROM HEATER PLUGS.

21. PLUG IN HEATERS.

22. SET HEATER THERMOSTAT TO 450 DEG. F.

SEAL LEAK RATE TEST PROCEDURE (continued)

23. CHECK SYSTEM EVERY 2-3 HOURS TO SEE IF THE SEAL TEMPERATURE HAS REACHED 360 DEG. F, ADJUST THERMOSTAT AS REQUIRED TO ACHIEVE STEADY 360 DEG. F SEAL TEMP.

24. ONCE STEADY STATE 360 DEG. F SEAL TEMPERATURE (B6&B7) IS OBTAINED, TURN ON STRIP CHART RECORDER FOR PRESSURE RECORDING.

25. NOTE HERE AND ON CHART: DATE ( ), TIME ( ),
CHART SPEED ( ), TEST NO. ( ).

26. NOTE PEN COLOR CORRESPONDENCE HERE AND ON CHART:
RED ( ), BLUE ( ).

27. CALIBRATE RECORDER AND NOTE ON CHART THE CALIBRATION SCALING.

28. SET PRESSURE CONTROL VALVE AT 100 PSIG.

29. OPEN BLOCK VALVE AT NITROGEN TRAILER.

30. OPEN BLOCK VALVE FOR 1/2 INCH FLOW METER.

31. OPEN BLOCK VALVE DOWNSTREAM FROM PRESSURE CONTROL VALVE.

32. MAKE A HARD COPY OF THE POLYNOMIAL COEFFICIENTS USED TO CONVERT MILLIVOLT READINGS TO ENGINEERING UNITS FOR EACH DATA CHANNEL.

33. SET UP COMPUTER TO SCAN THE DATA CHANNELS EVERY 30 MINUTES.

34. DATA SHALL BE WRITTEN ON TWO FILES AND HARD COPY.

35. NOTE COMPUTER FILE NAME HERE AND ON HARD COPY:
(TESTX) WHERE X = TEST NO. X = ( ).

36. IF TEST PRESSURE HAS STABILIZED AT 100 PSIG, INCREASE PRESSURE CONTROL VALVE SETTING TO 160 PSIG

37. CONTINUE TEST AT 360 DEG. F at 160 PSIG FOR 6-20 HOURS.

38. PERFORM SEEPAGE TEST PER SEEPAGE TEST PROCEDURE.

39. SET HEATER THERMOSTAT AT 550 DEG. F.

40. WHEN SEAL TEMPERATURE REACHES 400 DEG. F (B3),
INCREASE HEATER THERMOSTAT SETTING TO 650 DEG. F.

41. WHEN SEAL (B3) TEMPERATURE REACHES 500 DEG. F,
HOLD SEAL TEMPERATURE AT 500 DEG. F FOR 2 HOURS THEN PERFORM SEEPAGE TEST PER SEEPAGE TEST PROCEDURE.

42. SET UP COMPUTER TO CONTINUE SCANNING EVERY 30 MINUTES. STORE DATA ON SAME FILE (TESTX) AND HARD COPY.

SEAL LEAK RATE TEST PROCEDURE (continued)

43. INCREASE HEATER THERMOSTAT SETTING TO 750 DEG. F.

44. WHEN SEAL (B3) TEMPERATURE REACHES 600 DEG. F, HOLD SEAL TEMPERATURE AT 600 DEG. F FOR 2 HOURS THEN PERFORM SEEPAGE TEST PER SEEPAGE TEST PROCEDURE.

45. SET UP COMPUTER TO CONTINUE SCANNING EVERY 30 MINUTES. STORE DATA ON SAME FILE (TESTX) AND HARD COPY.

46. INCREASE HEATER THERMOSTAT SETTING TO 800 DEG. F.

47. TEST TO A MAXIMUM SEAL TEMPERATURE OF 700 DEG. F AND HOLD SEAL TEMPERATURE AT 700 DEG. F FOR 2 HOURS OR UNTIL A LEAK DEVELOPS WHICHEVER COMES FIRST.

48. IF SEAL LEAK DEVELOPS, THROTTLE BLOCK VALVE AT TURBINE METER SUCH THAT STEADY STATE CONDITIONS ARE ACHIEVED.

49. NOTE START OF LEAKAGE ON STRIP CHARTS AND ON COMPUTER OUTPUT HARD COPY.

50. CHANGE COMPUTER TO SCAN EVERY 30 SECONDS. STORE DATA ON SAME FILE (TESTX) AND HARD COPY.

51. IF LEAK IS INSUFFICIENT FOR A TURBINE METER READING, PERFORM A SEEPAGE TEST PER SEEPAGE TEST PROCEDURE.

52. NOTE TERMINATION OF TEST ON STRIP CHARTS AND ON COMPUTER OUTPUT HARD COPY.

53. TURN OFF COMPUTER AND STRIP CHARTS.

54. TURN OFF HEATER THERMOSTAT.

55. UNPLUG HEATERS AND PLACE DANGER TAGS ON PLUGS.

56. CLOSE ALL BLOCK VALVES.

57. VENT TEST ASSEMBLY.

58. REMOVE INSULATION.

59. ALLOW FLANGES TO COOL.

60. DISASSEMBLE FLANGES FOR INSPECTION.

61. PHOTOGRAPH SEALS IN THE DISASSEMBLED FIXTURE WITH TEST NO. IDENTIFICATION.

AGING PROCEDURE FOR SANDIA TEST NO. ( )

1. RECORD TEST PARAMETERS: DATE ( ), TEST NO. ( ),
   SEAL DESIGN ( ), SEAL MATERIAL ( ),
   SEAL HARDNESS ( ), FLANGE SEPARATION ( ),
   FLANGE ROTATION ( ).

2. INSTALL TC'S IN LOCATIONS B6 AND B7.

3. PLACE SEALS IN SEAL GROOVES.

4. MEASURE SEAL HEIGHT ABOVE THE FLANGE SEATING SURFACE AT 4 LOCATIONS 90 DEGREES APART, LOCATIONS MEASURED COUNTERCLOCKWISE LOOKING DOWN, FROM PIPE INLET. RECORD MEASUREMENTS HERE.

MEASUREMENT LOCATION	0 DEG.	90 DEG.	180 DEG.	270 DEG.
INNER SEAL	( )	( )	( )	( )
OUTER SEAL	( )	( )	( )	( )

5. PLACE TOP FLANGE ON LOWER FLANGE. FOR TESTS 2-4 PUT SHIMS BETWEEN FLANGES SUCH THAT THE SEAL COMPRESSION IS HALF WHAT IT WOULD BE WITHOUT THE SHIMS.

6. TORQUE SIX BOLTS TO 300 FT-LBS.

7. CONNECT TC LEADS TO STRIP CHART RECORDER.

8. CONNECT HEATER LEADS.

9. PLACE INSULATION OVER AND AROUND THE TEST FIXTURE.

10. TURN ON STRIP CHART RECORDER.

11. NOTE HERE AND ON CHART: DATE ( ), TIME ( ),
    CHART SPEED ( ).

12. NOTE PEN COLOR CORRESPONDENCE HERE AND ON CHART:
    RED ( ), BLUE ( ).

13. CALIBRATE RECORDER AND NOTE CALIBRATION SCALES ON THE CHART.

14. REMOVE DANGER TAGS FROM HEATER PLUGS.

15. PLUG IN HEATERS.

16. SET HEATER THERMOSTAT SETTING TO 400 DEG. F.

17. CHECK SYSTEM APPROXIMATELY EVERY 2-3 HOURS TO SEE IF SEAL TEMPERATURE (B3) HAS REACHED 300 DEG. F. IF SEAL TEMPERATURES HAVE REACHED 300 DEG. F, NOTE START TIME OF 300 DEG. F AGING ON CHART AND HERE: DATE ( ), TIME ( )

AGING PROCEDURE FOR SANDIA TEST NO. ( )

18. CHECK SEAL TEMPERATURE AND MAKE APPROPRIATE THERMOSTAT ADJUSTMENTS TWICE EACH DAY. NOTE SETTING CHANGE BELOW.

19. AT THE END OF THE SEVENTH DAY OF AGING, NOTE HERE AND ON CHART DATE ( ), TIME ( )

20. TURN THERMOSTAT OFF.

21. UNPLUG HEATERS AND PLACE DANGER TAGS ON HEATER PLUGS.

22. REMOVE INSULATION FROM TOP FLANGE.

23. DISCONNECT HEATER LEADS.

24. REMOVE FLANGE BOLT NUTS.

25. REMOVE TOP FLANGE.

26. MEASURE SEAL HEIGHT ABOVE THE FLANGE SEATING SURFACE AT 4 LOCATIONS 90 DEGREES APART, LOCATIONS MEASURED COUNTERCLOCKWISE LOOKING DOWN, FROM PIPE INLET. RECORD MEASUREMENTS HERE.

MEASUREMENT LOCATION	0 DEG.	90 DEG.	180 DEG.	270 DEG.
INNER SEAL	( )	( )	( )	( )
OUTER SEAL	( )	( )	( )	( )

27. RECORD HERE TC READINGS FOR LOCATIONS B3, B6, at B7.
    B3 ( ) B6 ( ) B7 ( )

    THERMOSTAT ADJUSTMENTS

    DATE TIME B3-READING SETTING

SEEPAGE TEST PROCEDURE FOR SANDIA TEST NO. ( )

1. IF THIS SEEPAGE TEST IS NOT THE FIRST SEEPAGE TEST SKIP TO STEP 10.

2. MAKE A HARD COPY OF THE POLYNOMIAL COEFFICIENTS USED TO CONVERT THE MILLIVOLT READINGS TO ENGINEERING UNITS FOR EACH DATA CHANNEL.

3. OPEN BLOCK VALVE DOWN STREAM FROM PRESSURE CONTROL VALVE.

4. TURN ON STRIP CHART RECORDER FOR PRESSURE RECORDING.

5. CALIBRATE RECORDER AND NOTE CALIBRATION SCALES ON CHART

6. NOTE HERE AND ON CHART: DATE ( ), TIME ( )

7. NOTE PEN COLOR CORRESPONDENCE HERE AND ON CHART
   RED ( ), BLUE ( ).

8. SET PRESSURE STRIP CHART RECORDER CHART SPEED AT 1 INCH PER MINUTE.

9. NOTE CHART SPEED ON CHART.

10. SET UP THE COMPUTER TO SCAN THE DATA CHANNELS EVERY 30 SECONDS FOR 5-10 MINUTES.

11. WRITE DATA TO TWO FILES AND HARD COPY.

12. NOTE COMPUTER FILE NAME HERE AND ON HARD COPY
    FILENAME (STxzzz) WHERE x = TEST NO. and z = TEMPERATURE OF B3 IN DEGREES F. (ST_____)

13. PRESSURIZE TEST FLANGE TO 160 psig VIA 1/2 INCH TURBINE METER VALVE AND CONTROL VALVE.

14. CLOSE BLOCK VALVE DOWN STREAM FROM CONTROL VALVE.

15. NOTE START OF SEEPAGE TEST ON PRESSURE STRIP CHART AND ON COMPUTER HARD COPY.

16. AFTER 5-10 MINUTES NOTE END OF TEST ON STRIP CHART AND ON COMPUTER OUTPUT HARD COPY.

17. RETURN TEST CONDITIONS TO THOSE PRIOR TO SEEPAGE TEST.

Distribution:

U. S. Government Printing Office
Receiving Branch (Attn: NRC Stock)
8610 Cherry Lane
Laurel, MD 20707 (500 copies for R1, RD)

US Nuclear Regulatory Commission
Engineering Branch
5650 Nicholson Lane
Rockville, MD 20852
Attn: J. F. Costello (20 copies)
H. L. Graves

US Department of Energy
Office of Nuclear Energy
Mail Stop B-107
NE-540
Washington, DC 20545
Attn: A. Millunzi
Bernard J. Rock
D. Giessing (3 copies)

CBI NaCon, Inc.
800 Jorie Boulevard
Oak Brook, IL 60521
Attn: Thomas J. Ahl

Wilfred Baker Engineering
218 E. Edgewood Pl.
P. O. Box 6477
San Antonio, TX 78209
Attn: Wilfred E. Baker

William C. Black
2650 Woodside Road
Bethlehem, PA 18017

Wiss, Janney, Elstner Assoc., Inc.
330 Pfingsten Road
Northbrook, IL 60062
Attn: Ted M. Brown

Battelle Columbus Laboratories
505 King Avenue
Columbus, OH 43201
Attn: Richard Denning

Bechtel Power Corporation
12400 E. Imperial Highway
Norwalk, CA 90650
Attn: Asadour H. Hadjian

Bechtel Power Corp.
15740 Shady Grove Rd.
Gaithersburg, MD 20877
Attn: T. E. Johnson
K. Y. Lee (2 copies)

1245 Newmark CE Lab
University of Illinois
208 N. Romine
MC-250
Urbana, IL 61801
Attn: Prof. Mete A. Sozen

Stevenson & Associates
9217 Midwest Ave.
Cleveland, OH 44125
Attn: John D. Stevenson

United Engineers & Constructors, Inc.
30 S. 17th St.
Philadelphia, PA 19101
Attn: Joseph J. Ucciferro

Electrical Power Research Institute
3412 Hillview Avenue
PO Box 10412
Palo Alto, CA 94304
Attn: H. T. Tang, Y. K. Tang
Raf Sehgal, J. J. Taylor,
W. Loewenstein (5 copies)

School of Civil & Environ. Engr.
Hollister Hall Cornell University
Ithaca, NY 14853
Attn: Professor Richard N. White

NUTECH
225 N. Michigan Ave.
16th Floor
Chicago, IL 60601
Attn: John Clauss

Iowa State University
Department of Civil Engineering
420 Town Engineering Bldg.
Ames, IA 50011
Attn: L. Greimann

TVA
400 Commerce Ave.
Knoxville, TN 37902
Attn: D. Denton, W9A18

Los Alamos National Laboratories
PO Box 1663
Mail Stop N576
Los Alamos, NM 87545
Attn: C. Anderson

EQE Inc.
3300 Irvine Aveune
Suite 345
Newport Beach, CA 92660
Attn: M. K. Ravindra

University of Illinois
Dept. of Civil Engineering
Urbana, IL 61801
Attn: C. Siess

EBASCO Services, Inc.
Two World Trade Center
New York, NY 10048
Attn: Robert C. Iotti

EG&G Idaho
Willow Creek Bldg. W-3
PO Box 1625
Idaho Falls, ID 83415
Attn: B. Barnes, T. L. Bridges
(2 copies)

Sargent & Lundy Engineers
55 E Monroe St.
Chicago, IL 60603
Attn: A. Walser
P. K. Agrawal (2 copies)

General Electric Company
175 Curtner Ave.
San Jose, CA 95125
Attn: J. E. Love, E. O. Swain,
D. K. Henrie, R. Gou (4 copies)

Westinghouse Electric Corp.
Waltz Mill Site
Box 158
Madison, PA 15663
Attn: Vijay K. Sazawal

R. F. Reedy, Inc.
236 N Santa Cruz Ave.
Los Gatos, CA 95030

Quadrex Corporation
1700 Dell Ave.
Campbell, CA 95008
Attn: Quazi A. Hossain

ANATECH International Corp.
3344 N. Torrey Pines Court
Suite 320
LaJolla, CA 92037
Attn: Y. R. Rashid

Oak Ridge National Laboratory
PO Box Y
Oak Ridge, TN 37830
Attn: Steve Hodge

Brookhaven National Laboratory
Building 130
Upton, NY 11973
Attn: C. Hofmayer,T. Pratt
M. Reich (3 copies)

Argonne National Laboratory
9700 South Cass Avenue
Argonne, IL 60439
Attn: J. M. Kennedy,
R. F. Kulak,
R. W. Seidensticker (3 copies)

Tennessee Valley Authority
400 Summit Hill Rd.
W9D24C-K
Knoxville, TN 37902
Attn: Nathaniel Foster

University of Wisconsin
Nuclear Engineering Dept.
Madison, WI 53706
Attn: Prof. Michael Corradini

Brookhaven National Laboratory
Building 820M
Upon, NY 11973
Attn: Ted Ginsberg

Dept. of Chemical & Nuclear Engineering
University of California Santa Barbara
Santa Barbara, CA 93106
Attn: T. G. Theofanous

Institut für Mechanik
Universität Innsbruck
Technikerstr. 13
A-6020 Innsbruck
AUSTRIA
Attn: Prof. G. I. Schuëller

Nuclear Studies & Safety Dept.
Ontario Hydro
700 University Avenue
Toronto, Ontario
CANADA M5G 1X6
Attn: W. J. Penn

University of Alberta
Dept. of Civil Engineering
Edmonton, Alberta
CANADA T6G 2G7
Attn: Prof. D. W. Murray

Commissariat a L'Energie Atomique
Centre d'Etudes Nucleaires de Saclay
F-91191 Gif-Sur-Yyette Cedex
FRANCE
Attn: M. Livolant, P. Jamet (2 copies)

Institut de Protection et de
Surete Nucleaire
Commissariat a l'Energie Atomigue
F-92660 Fontenay-aux-Roses
FRANCE
Attn: M. Barbe

Kernforschungszentrum Karlsruhe GmbH
Postfach 3640
D-7500 Karlsruhe
FEDERAL REPUBLIC OF GERMANY
Attn: R. Krieg, P. Gast (2 copies)

Lehrstuhl fuer Reakordynamik
und Reaktorsicherheit
Technische Universitaet Muenchen
D-8046 Garching
FEDERAL REPUBLIC OF GERMANY
Attn: Prof. H. Karwat

Staatliche Materialpruefungsanstalt (MPA)
University of Stuttgart
Pfaffenwaldring 32
D-7000 Stuttgart 80 (Vaihingen)
FEDERAL REPUBLIC OF GERMANY
Attn: Prof. K. F. Kussmaul

Gesellschaft fuer Reaktorsicherheit
Schwertnergasse 1
D-5000 Köln 1
FEDERAL REPUBLIC OF GERMANY
Attn: H. Schulz, A. Hoefler,
F. Schleifer (3 copies)

Kraftwerk Union AG
Hammerbacherstr. 12-14
D-8520 Erlangen
FEDERAL REPUBLIC OF GERMANY
Attn: M. Hintergräber

Ente Nazionale per l'Energia Elettrica
v. le Regina Margherita, 137
Rome
ITALY
Attn: Francesco L. Scotto

ISMES
Viale Giulio Cesare 29
I-24100 Bergamo
ITALY
Attn: A. Peano

ENEA-DISP
ACO-CIVME
Via Vitaliano Brancati, 48
I-00144 Roma
ITALY
Attn: Giuseppe Pino

Nuclear Equipment Design Dept.
Hitachi Works, Hitachi, Ltd.
3-1-1 Saiwai-Cho
Hitachi-Shi
Ibaraki-ken
JAPAN
Attn: O. Oyamada

Division of Technical Information
Japan Atomic Energy Research Institute
2-2, Uchisaiwai-cho 2-chome
Chiyoda, Tokyo 100
JAPAN
Attn: Jun-ichi Shimokawa

University of Tokyo
Institute of Industrial Science
22-1, Roppongi 7
Minatu-ku, Tokyo
JAPAN
Attn: Prof. H. Shibata

Civil Engineering Laboratory
Central Research Institute of
Electric Power Industry
1646 Abiko Abiko-Shi Chiba
JAPAN
Attn: Yukio Aoyagi

Kajima Corporation
No. 1-1, 2-Chome Nishishinjuku
Shinjuku-ku
Tokyo 160
JAPAN
Attn: K. Umeda

Muto Institute of Structural Mechanics
Room 3005 Shinjuku Mitsui Building
Shinjuku-ku
Tokyo, 160
JAPAN
Attn: Tadashi Sugano

Nuclear Power Engineering Test Center
6-2, 3-Chome, Toranomor
Minatoku
Tokyo 105
JAPAN
Attn: Yoshio Tokumaru

Japan Atomic Energy Research Inst.
Tokai-Mura, Ibaraki-Ken 319-11
JAPAN
Attn: Kunihisa Soda
Toshikuni Isozaki (2 copies)

Shimizu Construction Co., Ltd.
No. 4-17, Etchujima 3-Chome
Koto-Ku
Tokyo 135
JAPAN
Attn: Toshihiko Ota

Shimizu Construction Co., Ltd.
No. 18-1, Kyobashi 1-Chome
Chuo-ku
Tokyo 104
JAPAN
Attn: Toshiaki Fujimori

Korea Advanced Energy Research Inst.
P. O. Box 7
Cheong Ryang
Seoul
KOREA
Attn: Pilsoon Han

Universidad Politecnica
Escuela Tecnica Superior
de Ingenieros Industriales
Madrid
SPAIN
Attn: Agustin Alonso

Studsvik Energiteknik AB
S-611 82 Nyköping
SWEDEN
Attn: Kjell O. Johansson

Swedish State Power Board
Nuclear Reactor Safety
S-162 87 Vällingby
SWEDEN
Attn: Hans Cederberg
Per-Eric Ahlström
Ralf Espefaelt (3 copies)

Swiss Federal Institute of Technology
Institute of Structural Engineering
ETH-Hoenggerberg, HIL
CH-8093 Zurich
SWITZERLAND
Attn: W. Ammann

Motor-Columbus Consulting Engineers, Inc.
Parkstrasse 27
CH-5401 Baden
SWITZERLAND
Attn: K. Gähler, A. Huber
A. Schopfer (3 copies)

EIR (Swiss Federal Institute for
Reactor Research)
CH-5303 Wuerlingen
SWITZERLAND
Attn: O. Mercier
P. Housemann (2 copies)

Swiss Federal Nuclear Safety Inspectorate
Federal Office of Energy
CH-5303 Wuerenlingen
SWITZERLAND
Attn: S. Chakraborty

Swiss Federal Institute of Technology
Chemin de Bellerive 32
CH-1007 Lausanne
SWITZERLAND
Attn: Prof. F. H. Wittmann

Elektrowatt Ingenieurunternehmung AG
Bellerivestr. 36
CH-8022 Zürich
SWITZERLAND
Attn: John P. Wolf

Institute of Nuclear Energy Research
P. O. Box 3
Lung-Tan
Taiwan 325
REPUBLIC OF CHINA
Attn: Sen-I Chang

Atomic Energy Establishment
Winfrith
Dorchester Dorset
DT2 8DH
UNITED KINGDOM
Attn: Peter Barr

Atomic Energy Authority
Safety and Reliability Directorate
Wigshaw Lane
Culcheth
Warrington WA3 4NE
UNITED KINGDOM
Attn: D. W. Phillips

HM Nuclear Installation Inspectorate
St. Peter's House
Stanley Precinct
Bootle L20 3LZ
UNITED KINGDOM
Attn: R. J. Stubbs

Northern Illinois University
Mechanical Engineering Dept.
DeKalb, IL 60115
Attn: A. Marchertas

Taylor Woodrow Construction Limited
345 Ruislip Road
Southall, Middlesex
UB1 2QX
UNITED KINGDOM
Attn: Carl C. Fleischer
Richard Crowder (2 copies)

Central Electricity Generating Board
Barnett Way
Barnwood, Gloucester
GL4 7RS
UNITED KINGDOM
Attn: J. Irving

Central Electricity Generating Board
Booths Hall
Chelford Road
Knutsford, Cheshire
WA16 8QG
UNITED KINGDOM
Attn: Carl Lomas

City College of New York
Dept. of Civil Engineering
140 Street and Convent Ave.
New York, NY 10031
Attn: C. Costantino

3141 S. A. Landenberger (5)
3151 W. L. Garner
6400 D. J. McCloskey
6410 N. R. Ortiz
6420 J. V. Walker
6440 D. A. Dahlgren
6442 W. A. von Riesemann (34)
6442 D. B. Clauss
6442 D. S. Horschel
6442 D. L. Lambert
6442 M. B. Parks
6447 M. P. Bohn
8024 P. W. Dean

NRC FORM 335 (2-84) NRCM 1102, 3201, 3202

U.S. NUCLEAR REGULATORY COMMISSION

BIBLIOGRAPHIC DATA SHEET

SEE INSTRUCTIONS ON THE REVERSE.

1. REPORT NUMBER (Assigned by TIDC, add Vol. No., if any)

NUREG/CR-4944
SAND87-7118

2. TITLE AND SUBTITLE

Containment Penetration Elastomer Seal Leak Rate Tests

3. LEAVE BLANK

4. DATE REPORT COMPLETED

MONTH	YEAR
November	1986

5. AUTHOR(S)

Thomas L. Bridges

6. DATE REPORT ISSUED

MONTH	YEAR
July	1987

7. PERFORMING ORGANIZATION NAME AND MAILING ADDRESS (Include Zip Code)

EG&G Idaho, Inc.
Idaho National Engineering Laboratory under contract to:
Sandia National Laboratories
Albuquerque, NM 87185

8. PROJECT/TASK/WORK UNIT NUMBER

9. FIN OR GRANT NUMBER

FIN No. A1375

10. SPONSORING ORGANIZATION NAME AND MAILING ADDRESS (Include Zip Code)

Engineering Branch
Division of Engineering Technology
Office of Nuclear Regulatory Commission
Washington, DC 20555

11a. TYPE OF REPORT

Topical

b. PERIOD COVERED (Inclusive dates)

12. SUPPLEMENTARY NOTES

13. ABSTRACT (200 words or less)

Tests were performed on three elastomer seal designs commonly used for nuclear plant containment mechanical penetrations. The objective of this research project is to obtain an understanding of the integrity and leakage behavior of these seal designs under severe accident temperature and pressure conditions. The three designs tested and the seal materials used in the tests were: (a) double tongue-and-groove design with silicone rubber seals, (b) double-O-ring design with neoprene and ethylene-propylene (EPDM) seals, and (c) double gumdrop design with neoprene and EPDM seals. The effects of thermal aging and angular rotations of flange mating surfaces were determined. The test results provide information required to characterize the leakage behavior of penetrations under severe accident conditions.

14. DOCUMENT ANALYSIS – a. KEYWORDS/DESCRIPTORS

b. IDENTIFIERS/OPEN-ENDED TERMS

15. AVAILABILITY STATEMENT

Unlimited

16. SECURITY CLASSIFICATION

(This page)

U

(This report)

U

17. NUMBER OF PAGES

18. PRICE

☆ U.S. GOVERNMENT PRINTING OFFICE: 1987—573-049/61015