SANDIA REPORT
SAND86—2997 • UC—37
Unlimited Release
Printed August 1987

TA566A Power Controller/Encoder SANDUS

Roy LeBlanc

Prepared by
Sandia National Laboratories
Albuquerque, New Mexico 87185 and Livermore, California 94550
for the United States Department of Energy
under Contract DE-AC04-76DP00789

When printing a copy of any digitized SAND Report, you are required to update the markings to current standards.

SF2900Q(8-81)

Issued by Sandia National Laboratories, operated for the United States Department of Energy by Sandia Corporation.

NOTICE: This report was prepared as an account of work sponsored by an agency of the United States Government. Neither the United States Government nor any agency thereof, nor any of their employees, nor any of their contractors, subcontractors, or their employees, makes any warranty, express or implied, or assumes any legal liability or responsibility for the accuracy, completeness, or usefulness of any information, apparatus, product, or process disclosed, or represents that its use would not infringe privately owned rights. Reference herein to any specific commercial product, process, or service by trade name, trademark, manufacturer, or otherwise, does not necessarily constitute or imply its endorsement, recommendation, or favoring by the United States Government, any agency thereof or any of their contractors or subcontractors. The views and opinions expressed herein do not necessarily state or reflect those of the United States Government, any agency thereof or any of their contractors or subcontractors.

Printed in the United States of America
Available from
National Technical Information Service
U.S. Department of Commerce
5285 Port Royal Road
Springfield, VA 22161

NTIS price codes
Printed copy: A03
Microfiche copy: A01

SAND86–2997
Unlimited Release
Printed August 1987

Distribution
Category UC–37

TA566A Power Controller/Encoder SANDUS

Roy LeBlanc
NTS Instrumentation Development Division
Sandia National Laboratories
Albuquerque, NM 87185

Abstract

The TA566A Power Controller/Encoder, designed to operate in the MA164 Digital Data Acquisition System, is used to control ac power to the Data Collection elements (crates) and to several of the Common Equipment elements of the MA164. It also monitors the power and health status of the MA164 elements and encodes this information for transmission to the outside world.

Contents

1. General 7
   1.1 System Definition 7
      1.1.1 Data Collection Elements 7
      1.1.2 Common Equipment Elements 11
      1.1.3 Setup and Playback Equipment 11
   1.2 Element Definition 11

2. Technical Description 13
   2.1 Physical Description 13
   2.2 Functional Description 13
      2.2.1 Power-Up Circuitry 16
      2.2.2 Power-Down Circuitry 16
      2.2.3 Auto Power-Down Circuitry 16
      2.2.4 Auto Power-Down Diagnostics 17
      2.2.5 Power Redundancy 17
   2.3 Timing 17
   2.4 Encoders 17
      2.4.1 Encoder 1 17
      2.4.2 Encoder 2 18
   2.5 Visual Aides 18
      2.5.1 Common Equipment Monitors 18
      2.5.2 Data Collection Crate Monitors 18
      2.5.3 Lockout Monitors 18
      2.5.4 Local Health-Status Monitors 18
      2.5.5 Auto Power-Down Monitor 18
   2.6 Bench Testing TA566A 18
      2.6.1 Input Conditions 18
      2.6.2 Setup Conditions 18

3. TA566A Mechanical Assembly 21
   3.1 Physical Description 21
      3.1.1 Chassis 21
      3.1.2 Internal Parts 21
      3.1.3 Cabling 21
      3.1.4 Connector Types 21

APPENDIX A—List of Drawings for TA566A Power Controller/Encoder 23
APPENDIX B—Switch Options for Power Control 25
APPENDIX C—Encoder Format 27

Figures

1 SANDUS 8
2 MA164 Block Diagram 9
3 MA164 Rack Layout 10
4 TA566A Power Controller/Encoder 14
5 TA566A Block Diagram 15

TA566A Power Controller/Encoder SANDUS

1. General

This manual is intended for the use of individuals responsible for operating and maintaining the TA566A Power Controller/Encoder.

Three appendixes are included with this manual: Appendix A is a list of drawings for the TA566A; Appendix B is a list of switch options for power control by the TA566A; and Appendix C is a graphic representation of the Encoder formats.

1.1 System Definition

This manual contains the physical, functional, and diagnostic information for the TA566A Power Controller/Encoder, which forms a part of the Common Equipment used in the MA164 Digital Data Acquisition System.*

The MA164 is capable of collecting data from up to 128 unique analog channels. Each input signal (dc to 10 MHz) has its own dedicated signal conditioner, amplifier, and data module. It can also collect data from up to 88 unique 8-bit digital channels. The entire system can be set up and controlled by either a local or a remote computer. Figure 1 shows the enclosure for the MA164 system. Figure 2 is a simplified block diagram of the MA164 system. Figure 3, the rack layout, shows where the TA566A is physically located in the MA164 system.

*J. M. Opalka, *SANDUS MA164 Digital Data Acquisition System Specifications*, SAND83-2038 (Albuquerque, NM: Sandia National Laboratories, November 1983).

A standard MA164 system contains all the equipment needed to set up and operate the Data Collecton system. This includes the Data Collection elements, several elements referred to as Common Equipment, and the Setup and Playback Equipment.

The MA164 Digital Data Acquisition System is more commonly referred to as SANDUS (Sandia Digital Underground System). The TA566A Power Controller/Encoder is one element of the SANDUS.

1.1.1 Data Collection Elements

The Data Collection elements comprise the source and translator couplers, signal conditioner/amplifier, data modules, and the crates. The signal conditioner/amplifiers provide for bridge completion, calibration line termination, and amplification for analog signals. The data modules—up to 128 in the MA164—contain the presample filters, sample rate control, trigger controls, analog-to-digital converters, and the internal memory. The crates provide the power and decode commands, and interface the signal conditioner/amplifier and the data modules with the Common Equipment. Each crate can control up to eight signal conditioners and data modules. Analog data may be recorded in two ways: the signals may be digitized and output as real-time data to a remotely located recording facility or they may be stored in internal 16K memory for later readout and processing.

The MA164 also services up to 88 digital data channels of 8 bits each (704 bits). The data is output in the same way as real-time data.

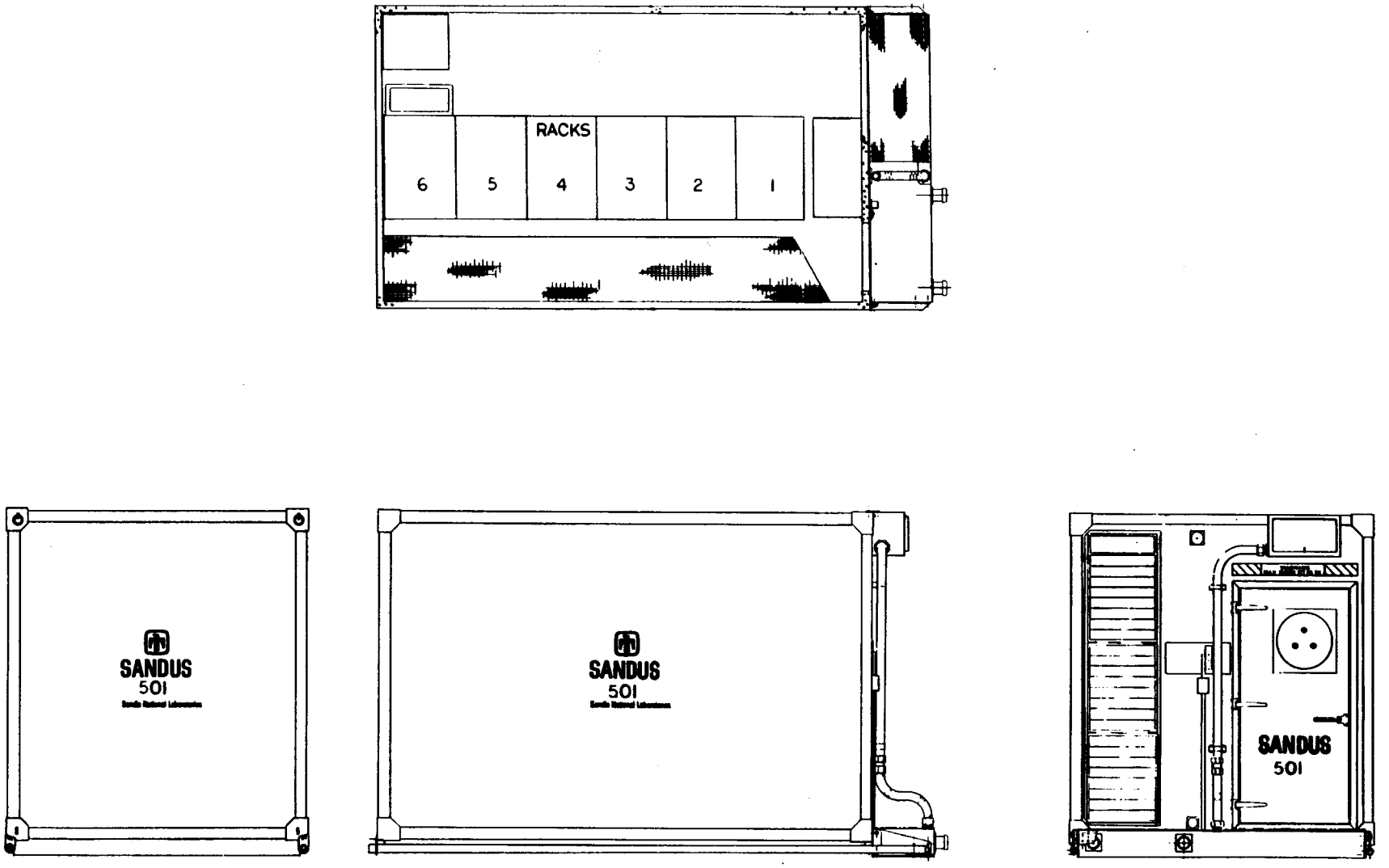

Figure 1. SANDUS

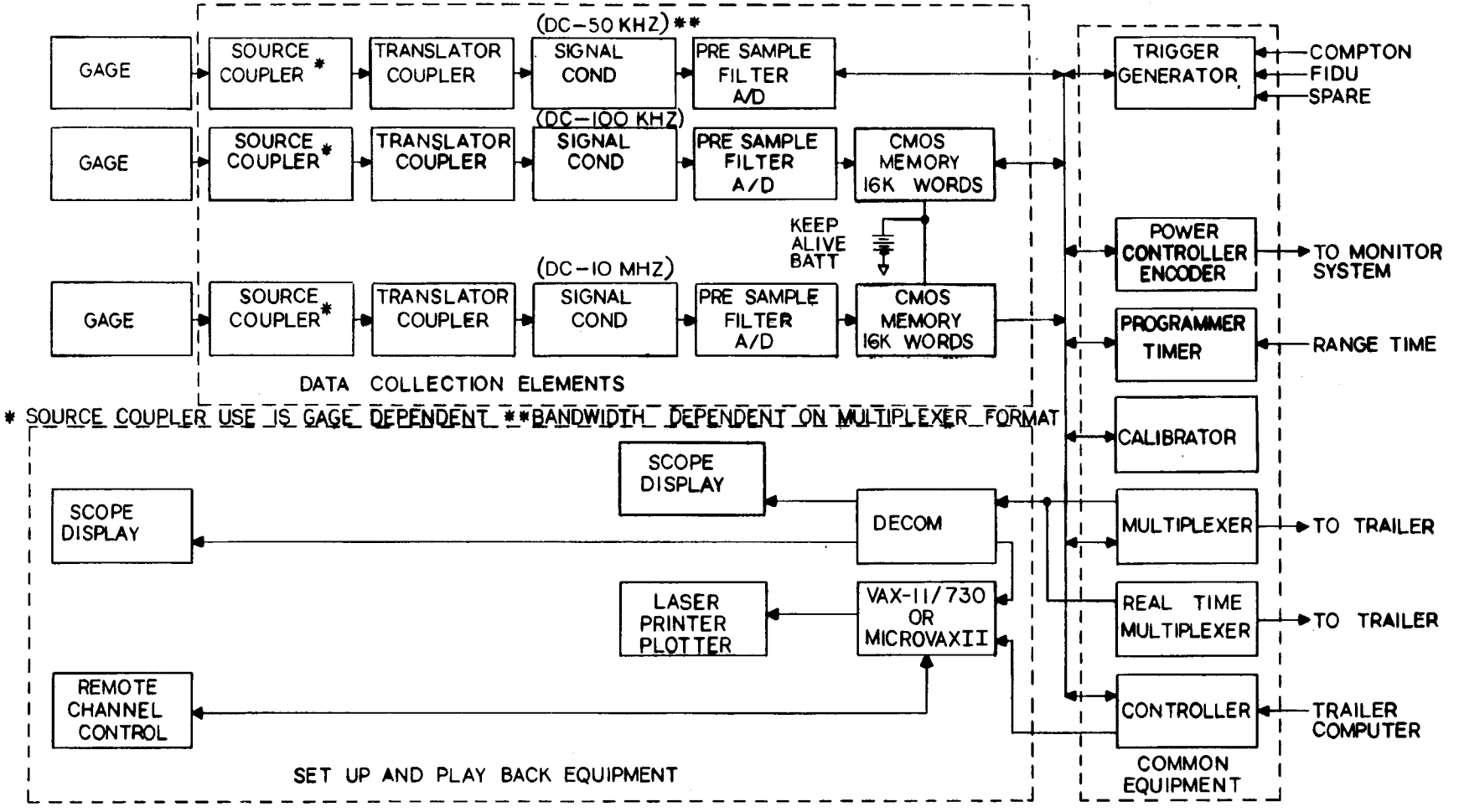

Figure 2. MA164 Block Diagram

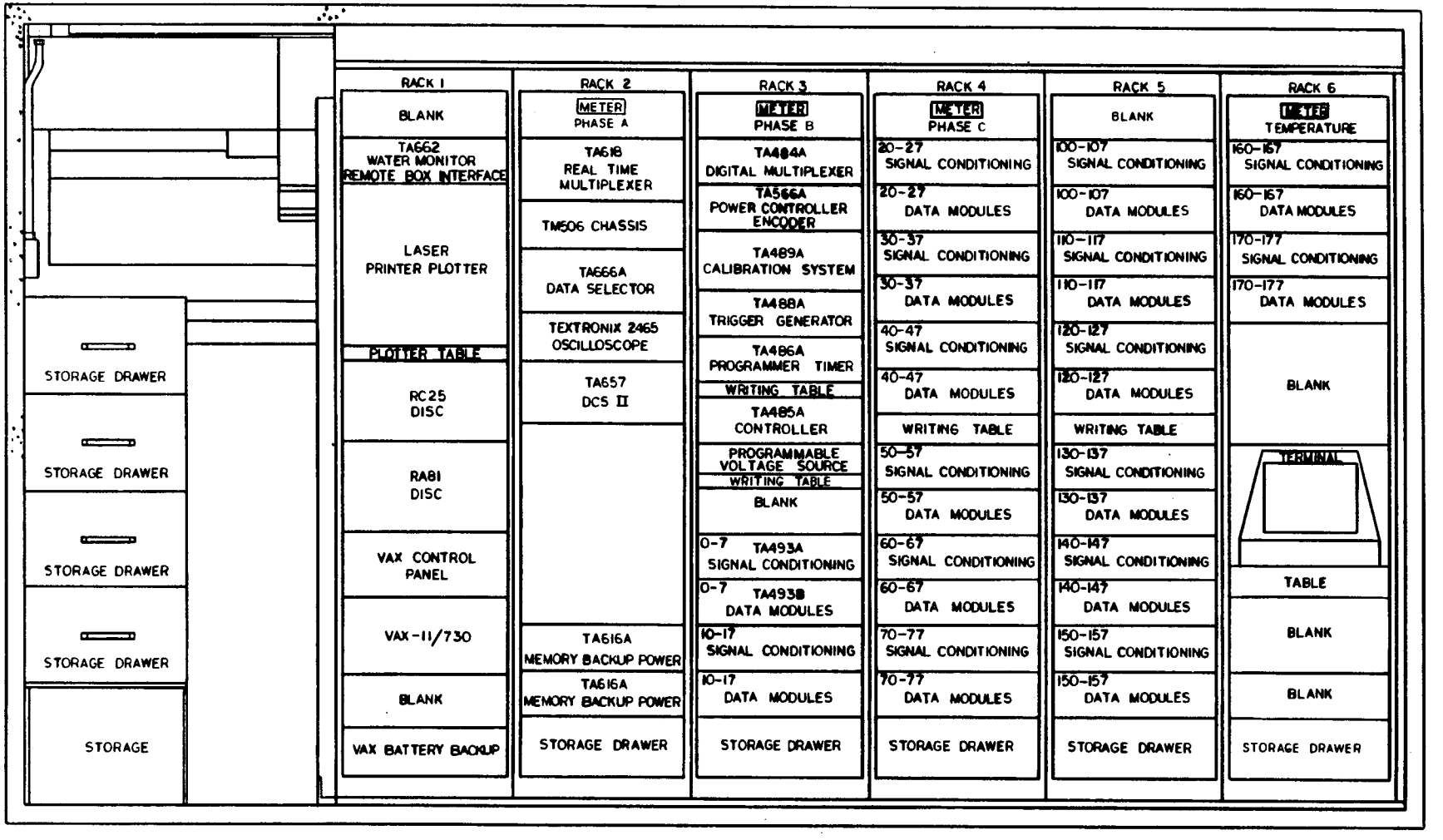

Figure 3. MA164 Rack Layout

1.1.2 Common Equipment Elements

The Common Equipment provides a means of operating the data system from remote locations as well as locally. Its elements comprise the TA484A Multiplexer, TA485A Controller, TA486A Programmer/Timer, TA488B Trigger Generator, TA566A Power Controller/Encoder, and TA489A Calibrator. These elements initiate automatic countdowns, provide arms and triggers for data modules, provide system calibration, control system power, control setup parameters for each channel, and allow output of the digitized data to a remote location.

1.1.3 Setup and Playback Equipment

The computer provides a means to set up and test the individual channels. It also provides data playback and storage.

The test equipment provides communication and some of the calibration equipment. The TA666A Data Selector provides quick-look data displays for channel status.

1.2 Element Definition

The TA566A Power Controller/Encoder controls the power applied to the various elements of the MA164 Digital Data Acquisition System (SANDUS).

The health status of the MA164 elements is monitored by the TA566A. The multiplexed output of all the individual elements' health status is routed to the TA595 Isolation Junction Box for ultimate transmission to the Sandia Monitoring System.

2. Technical Description

2.1 Physical Description

The TA566A Power Controller/Encoder is assembled in an all-metal chassis whose parts have been coated with conductive corrosion inhibitors. The chassis is 19 in. wide × 5-1/4 in. high × 26-in. deep, and can be mounted on a standard rack (Figure 4). Removable top and bottom covers give access to its internal components. Chassis slides provide ready internal access and efficient installation, and make it easy to remove from equipment racks.

Two wire-wrap boards provide area for integrated circuits and input/ouput interfacing. Two +5-V power supplies provide the operating voltage for the logic circuitry elements, one as a backup for the other. The ac power is monitored by three encapsulated modules. A PC board sums the three ac phases and serves as an output for external recording.

The front panel contains the local control switches, indicator lights, meters, visual displays, and health stream outputs. The input/output connectors, fan, and power fuses are contained on the rear panel.

2.2 Functional Description

The TA566A Power Controller/Encoder controls the power to most of the elements in the MA164 Digital Data Acquisition System. This control can be either local or remote. The local controls are initiated at the front panel; the remote controls are initiated by the TA485A Controller or the TA486A Programmer/Timer.

Power control for each element controlled by the TA566A is a positive TTL-level output. The TTL level controls a solid-state relay located within the receiving element, which in turn controls ac voltage to the power supply within the controlled element. Each element of the MA164 also contains a local switch on the front panel that may enable or inhibit power control.

The TA566A receives health-status bits from each of the MA164 elements for which power is controlled. These bits are multiplexed and converted to a Biphase-L (BIO-L) serial data stream for output to the TA595 Isolation Junction Box for transmission to the Sandia Monitor System. Figure 5 is a functional block diagram of the TA566A Power Controller/Encoder in the MA164 Digital Data Acquisition System.

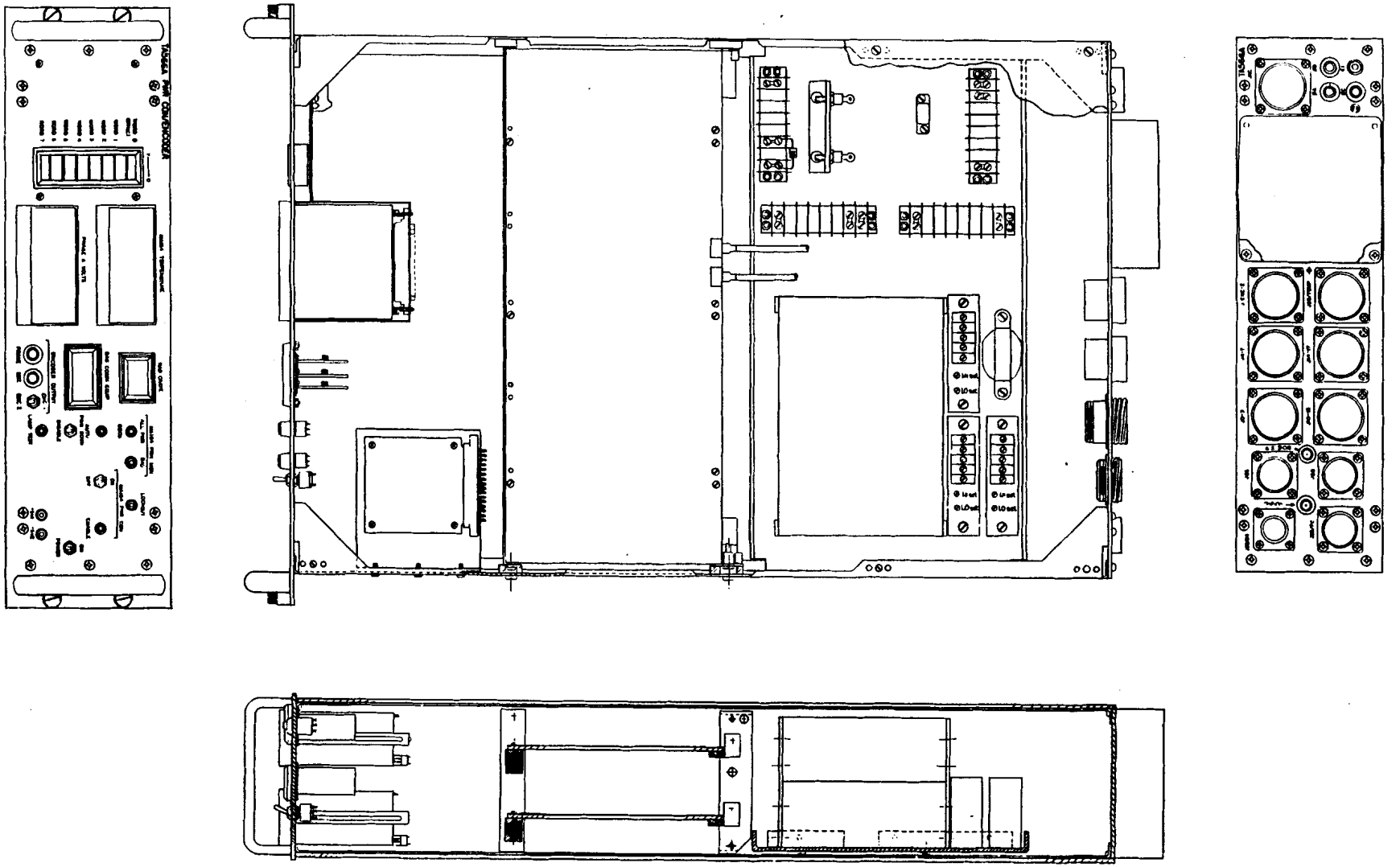

Figure 4. TA566A Power Controller/Encoder

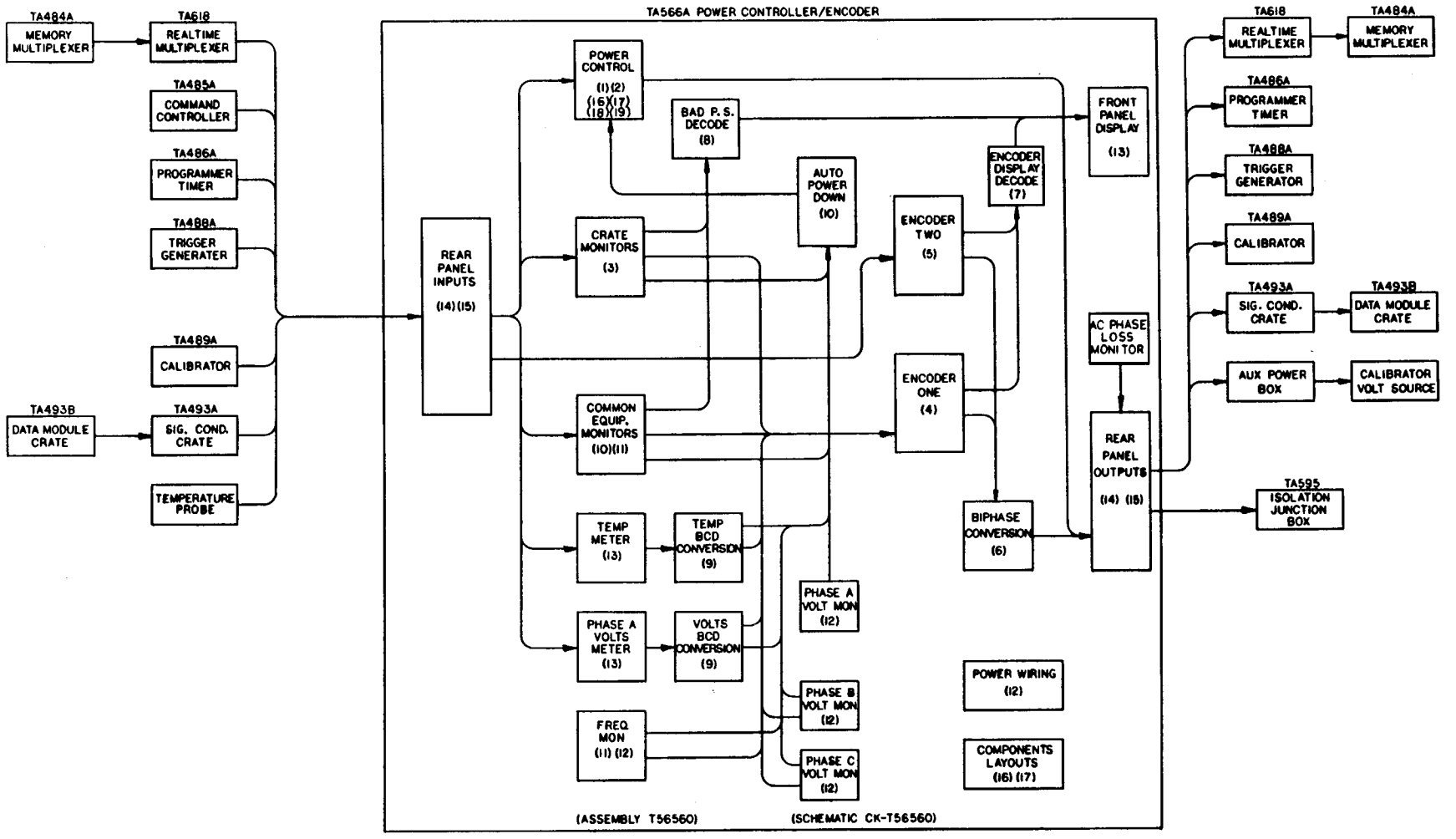

Figure 5. TA566A Block Diagram

2.2.1 Power-Up Circuitry

The TA566A circuitry used to power up the elements in the MA164 Digital Data Acquisition System accepts "power-up" commands from two sources: the front panel controls and the TA485A Controller.

This "power-up" circuitry is redundant to ensure its operability. It is designed to provide a sequential load to the input ac power of the SANDUS. Upon execution of "power-up," the TA566A issues power controls to the Common Equipment elements of the MA164 Digital Data Acquisition System, then it powers up the first 16 of the 32 Data Collection crates. The 16 Data Collection crates remaining are powered up last. This sequence decreases the ac power surge required by SANDUS when the system is powered up.

If the SANDUS receives a timing signal, called LOCKOUT, the TA566A provides "power-up" simultaneously to all elements of the MA164 Digital Data Acquisition System under its control. No "power-down" commands are accepted until the input LOCKOUT signal is removed. A system Power-On Reset removes LOCKOUT. The TA566A receives LOCKOUT from the TA486A.

2.2.1.1 Power Enable

A toggle switch, labeled MA164 POWER CON, is located on the front panel of the TA566A Power Controller/Encoder. When this switch is in the *ON* position, the TA566A will accept "power-up" commands from remote or local sources. If the switch is left in the *OFF* position, the TA566A ignores commands of "power-up" from either source.

The TA566A can send "power-on" levels to all MA164 elements when it is powered up; however, the position of the POWER-ON ENABLE switch precludes this if the switch is in the *OFF* position when the TA566A is powered up.

2.2.2 Power-Down Circuitry

The TA566A "power-down" circuitry is also reduntant to ensure operability. It accepts commands to power-down from one of four sources: (1) the TA485A Controller, (2) the TA486A Programmer/Timer, (3) the front panel, and (4) the Internal Auto Power-Down, if enabled.

When the MA164 Digital Data Acquisition System is powered down either locally or remotely through the TA566A Power Controller/Encoder, the TA485A Controller, the TA486A Programmer/Timer, and the TA566A Power Controller/Encoder remain powered. This ensures a viable means of restoring power to the MA164 elements, especially when they are controlled from a remote location.

A 520-ms trap ensures that only valid signals are accepted. This precaution precludes the inadvertent removal of power from the MA164 elements. POWER-DOWN signals are allowed to execute a "system power-down" only if they last more than 520 ms.

When "power-down" is controlled from the TA486A Programmer/Timer, each of the MA164 elements may be controlled by one of two signals, labeled PWR OFF 1 and PWR OFF 2. The TA486A may be programmed to power down some of the elements at a later time. PWR OFF 1 and PWR OFF 2 are routed through a slide switch within the TA566A Power Controller/Encoder. Selection of the POWER DOWN signal to control a particular element must be made inside the TA566A. See Appendix B for switch locations and selections.

2.2.3 Auto Power-Down Circuitry

The TA566A Power Controller/Encoder contains circuitry to monitor power in the absence of the MA164 system operator. This circuitry is enabled locally at the TA566A front panel, and is referred to as the Auto Power-Down Mode.

The Auto Power-Down Mode can be enabled-verified by a light on the TA566A front panel only if *all* of the following conditions are met:

- All three ac voltages must be within operating levels (105 to 125 V).
- The ac frequency must be between 56 and 64 Hz.
- All MA164 elements must be powered up.
- The internal air temperature of the MA164 must be less than 100°F.

Note: Before enabling the Auto Power-Down Mode, the operator should view the output of Encoder 2 on the bar display located on on the front panel. If one of the first four bits of word 0 is not ON, a reset should be inititiated by pushing LAMP TEST on the front panel of the TA566A.

When enabled, the TA566A Auto Power-Down Mode powers down the MA164 elements that it controls if any of the following conditions occur:

- If the ac voltage drops out of operating range
- If the ac frequency drops out of operating range
- If the power supply of any of the MA164 controlled elements fails.
- If the internal air temperature exceeds 100°F.

Once Auto Power-Down has been invoked, power to the MA164 elements cannot be restored until the Auto Power-Down Mode is disabled at the front panel of the TA566A, or until the faulty condition has been corrected.

2.2.4 Auto Power-Down Diagnostics

When Auto Power-Down is executed by the TA566A, the condition that caused the power-down is retained by logic latches. The operator determines the condition that caused a "power-down" by viewing the Encoder 2 output on the bar display of the TA566A's front panel; Encoder 2 is selected by a toggle switch. The first four bits of word 0 of Encoder 2 reflect the four conditions that will execute Auto Power-Down (see Appendix C). Bit 0 reflects an overtemperature condition; Bit 1, an ac voltage or ac frequency malfunction; Bit 2 implies a power-supply malfunction in one of the 32 Data Collection crates; and Bit 3 a power-supply malfunction in one of the Common Equipment elements. The cause of the Auto Power-Down is revealed when one of these four bits is not lit when viewing the Encoder 2 output. The latches for these bits can be reset by pushing LAMP TEST on the front panel of the TA566A.

2.2.5 Power Redundancy

Logic voltage (+5 V) within the TA566A is redundant. Two +5-V power supplies are used with their outputs diode isolated from each other. The outputs are adjusted to ~5.65 V dc to allow for diode voltage drop before voltage is delivered to logic circuitry. Each power supply is powered by a separate ac phase for redundancy and reliability.

The dc fan that provides airflow for logic cooling is controlled by the outputs from the +5-V dc power supplies. Thus, redundancy is ensured for airflow in the event that a power supply malfunctions.

2.3 Timing

A 307.2-kHz oscillator frequency provides the internal timing of the TA566A Power Controller/Encoder. To ensure operability, the oscillator has a redundant feature. The 307.2 kHz is divided into seven internally selectable rates: 153.6, 76.8, 38.4, 19.2, 9.6, 4.8, and 2.4 kHz. The operational rate can be internally selected by moving a jumper on wire-wrap board 1 near location 1BG10 (see sheet 2 of CK-T56560). The usual selection made for Nevada Test Site operation is 2.4 kHz. The actual output bit rate is half the selected rate. This rate conforms to the Sandia Automated Monitoring System, which operates at 1.2 kHz.

2.4 Encoders

Two encoders are designed into the TA566A to provide multiplexed outputs of health-status bits fed into the TA566A's rear panel and from the internal monitoring circuitry. The encoder ouputs are in BIO-L format. Both encoders are routed to the TA595 Isolation Junction Box in 8-word (8 bits/word) format. Encoder 1 is dedicated; Encoder 2 is essentially uncommitted (see Appendix C). Either encoder may be viewed through outputs on the front panel and bar displays. The encoder desired is selected by a toggle switch at the front panel.

2.4.1 Encoder 1

The first word of Encoder 1 is FRAME SYNC. The pattern is designed to alternate between SYNC and NOT-SYNC. Bit patterns are 10111000 and 01000111, respectively (Appendix C).

Words 1 and 2 of Encoder 1 are divided into one-bit-per-pair of Signal Conditioner Crate and Data Module Crate health-status bits. The health-status bits from each pair of crates are ORed together within the TA566A logic and provided as a single bit to the encoder. The bits of words 1 and 2 are sequentially presented to the viewer for determining the crate's health status. For example, bit 0 of word 1 represents crate 0; bit 1 of word 1 represents crate 1; etc. (Appendix C).

Word 3 and half of word 4 of Encoder 1 represent the health status of the MA164 Common Equipment elements (Appendix C). The second half of word 4 and bit 0 of word 5 represent the health status of ac power into the MA164 Digital Data Acquisition System. These status bits are provided by monitors within the TA566A. The rest of word 5 represents critical timing signals received by the MA164 Digital Data Acquisition System (Appendix C).

Word 6 of Encoder 1 represents the binary value of ac Phase A voltage. This reading is also shown on the TA566A front-panel meter. Word 7 of Encoder 1 represents the binary value of the internal air temperature of the MA164 Digital Data Acquisition System. This reading is also shown on the front-panel meter (Appendix C).

2.4.2 Encoder 2

Most of Encoder 2 is not dedicated. The first four bits (bits 0-3) of word 1 are hard-wired internally to the TA566A to provide a visual diagnostic for the SANDUS operator when the TA566A Auto Power-Down Mode is engaged and activated (see paragraph 2.2.4). All inputs to Encoder 2 (words 1-7) are available at the rear panel.

2.5 Visual Aides

The front panel of the TA566A Power Controller/Encoder contains several visual aides designed to make the diagnostics of the MA164 Digital Data Acquisition System problems more apparent. They include lights, meters, bar displays, and digital element displays.

2.5.1 Common Equipment Monitors

The Common Equipment display (labeled BAD COMMON EQUIP) indicates which Common Equipment element had a power-supply malfunction. If more than one element is experiencing a power problem, the display is not a reliable diagnostic. However, the bar display indicates all power-supply malfunctions simultaneously.

2.5.2 Data Collection Crate Monitors

The Data Crate display (labeled BAD CRATE) indicates which pair of crates had a power-supply malfunction. If more than one pair of crates experiences a power problem, the display usually indicates the higher numbered pair of crates. The bar display indicates all power-supply malfunctions simultaneously.

2.5.3 Lockout Monitors

The timing signal LOCKOUT is monitored locally by the TA566A and is also multiplexed into the health monitor stream for transmission to the Sandia Monitor System. The local monitors are displayed by a light on the front panel and in bit 7 of word 5 on the bar display.

2.5.4 Local Health-Status Monitors

The health status of the MA164 Digital Data Acquisition System elements is diagnosed by displays and lights on the front panel of the TA566A. The bar display shows the health status for all elements controlled by the TA566A and also the timing signal states. In addition, two small displays provide a diagnostic of any element that has experienced a power-supply malfunction. Two lights indicate ALL POWER GOOD if all elements are returning to good health status, or BAD POWER if one has a bad health status.

Two meters show the current reading of ac voltage for Phase A and the internal air temperature for the MA164 Digital Data Acquisition System.

2.5.5 Auto Power-Down Monitor

A light on the front panel, labeled APD ENABLE, indicates that the Auto Power-Down Mode is in an active monitoring state. This light is logically related to the toggle switch mounted below and will light only if the switch is placed in the upward position and if the following conditions exist:

- All MA164 elements must be powered.
- All ac phase voltages must be within operating range (105 to 125 V).
- The ac frequency must be between 54 and 64 Hz.
- The MA164 internal air temperature must be less than 100°F.

Should any of the above conditions change, the light will go out and except for critical elements, the MA164 elements will power down. (Refer to paragraph 2.2.3.)

2.6 Bench Testing TA566A

If testing the TA566A becomes necessary outside of the MA164 Digital Data Acquisition System environment, internal test aides may be employed.

2.6.1 Input Conditions

When using the TA566A Power Controller/Encoder as a stand-alone unit (bench testing), the following conditions are preferred:

- Input ac voltages from three phases
- Input from an external RTD (Resistive Temperature Device) temperature probe.

2.6.2 Setup Conditions

A set of DIP switches in the TA566A provide simulated inputs of health-status bits. The switch pack is located on wire-wrap board 2 at location 2AG28. The normal position of the switches is *OFF*, except for Switch 8, which is connected to a spare monitor input. If Switch 8 is left in the *OFF* position, the Auto Power-Down Mode cannot be enabled.

NOTE: The switch pack (2AG28) is used only as an aid to bench-test the TA566A. If any switch is left in the ON position (except Switch 8), the health-status input paralled by the switch left in the ON position will ***never*** *indicate a BAD condition. It is imperative that once bench testing is completed, all switches except Switch 8 be returned to the OFF position.*

When testing the TA566A on the bench, the following conditions may be used to enable the Auto Power-Down Mode for testing:

- Switch all pack 2AG28 switches in the *ON* position.
- RTD temperature probe input is applied at the rear panel.
- Apply ac voltage to all ac inputs.

Once the above conditions are met and the Auto Power-Down Mode is enabled at the front panel, any of the following will execute an Auto Power-Down:

- If any switch of switchpack 2AG28 is switched to *OFF*
- If loss of ac voltage input takes place
- If the temperature is greater than 100°F.

3. TA566A Mechanical Assembly

3.1 Physical Description

This section defines the mechanical assembly, including electronic components, mechanical parts, and connectors used in the TA566A Power Controller/Encoder.

3.1.1 Chassis

The TA566A chassis is found at the third location from the top of Rack 3 of the MA164 Digital Data Acquisition System (Figure 3). Its steel/aluminum chassis can be mounted on a standard rack. Dimensions are 19 in. wide × 5-1/4 in. high × 26 in. deep (Figure 4). Side panels are of corrosion-inhibited steel; all other parts are corrosion-inhibited aluminum.

The front and rear panels are made of 0.125-thick aluminum. The labeling is engraved and filled in black. The front and all four edges of the front panel are painted with two coats of epoxy, color 23617, per Federal Standard 595. The top and bottom covers are also made of 0.125-thick aluminum, with slots milled out at the front for airflow into the chassis. Both covers are corrosion-inhibited and can be removed for internal access to the chassis.

Cooling is by a 71 CFM Pamotor fan. Airflow is from front to rear within the chassis; air is drawn into the chassis through slots in the top and bottom front covers, and is expelled at the rear panel. The intake air is not filtered.

3.1.2 Internal Parts

Two universal wire-wrap Schottky TTL Augat boards (P/N 8136-SCH109-54) provide real estate for logic circuitry. The boards are hinge-mounted for access to the wire wrap, but only the upper board rotates on its hinge. Access to both sides of the lower board is made by hinging the upper board and removing the bottom cover (Figure 4).

Two +5-V 10-A, +12-V 1-A, and −12-V 1-A KEPCO switching power supplies provide voltage to the digital logic and the analog drivers for the multiplexed BIO-L monitor streams. The voltage outputs of each power supply are diode ORed for redundancy and reliability.

3.1.3 Cabling

All standard interface connections are made through 13 rear-panel-mounted connectors (Figure 4). One connector applies three ac phases to the TA566A. A "giant banana" jack provides quick connect/disconnect grounding of the TA566A to the MA164 ground bars. Four connectors interface all data collection crates for power-control levels and also for receipt of health-status levels. Four connectors interface to the controlled elements of the Common Equipment group of the MA164 to provide routing for power-control levels and to receive health-status levels.

One BNC connector provides an output composite of the three ac phase voltages used to record and/or monitor ac phase health status.

3.1.4 Connector Types

Except for the BNC connector and the banana jack, the interface connectors mounted on the rear panel are plastic. Manufactured by AMP Special Industries, they are rugged, molded plastic circular connectors that provide quick connect/disconnect mating. They are capable of accepting a variety of pins and sockets including machined and stamped parts. Sockets and pins that provide a direct interface for coax are also used. Coax and normal PVC-wired pins or sockets may be intermixed within the connectors.

APPENDIX A

List of Drawings for TA566A Power Controller/Encoder

Following is a list of drawings associated with the TA566A Power Controller/Encoder:

Drawing No.	Title
T56560	TA566A Power Control/Encoder Assembly
CK-T56560	TA566A Schematic
T69397	TA566A Chassis Modifications
T68381-000	Support, Hinge
T68438-000	Support, Insulator
T68626-000	Bracket, Support, Insulator
T68902-000	Bracket, Hinge, Support, Right-Hand
T68901-000	Bracket, Hinge, Support, Left-Hand
T68618-000	Bolt, Shoulder, Modified
T80856-000	Bracket #1
T80851-000	Bracket #2
S48572	Bracket #3
S67914-000	Bracket #4
T68249	TA566A Display Board
S67810-000	TA566A Phase Monitor Board

APPENDIX B

Switch Options for Power Control

The following TA566A Power Controller/Encoder switch-selectable power-control options are available to the SANDUS operator (refer to TA566A Schematic CK-T56560, sheets 16 to 19).

Switch	Location	Set**	Element Affected	TA486A Pwr-Off Input Enabled
1	2EA1	UP	TA488B	1
1	2EA1	DWN	TA488B	2
2	2EA6	UP	TA489A	1
2	2EA6	DWN	TA489A	2
3	2EA11	UP	TA484A	1
3	2EA11	DWN	TA484A	2
4	2EA16	UP	ALT PWR	1
4	2EA16	DWN	ALT PWR	2
5	2EA21	UP	TA486A	1
5	2EA21	DWN	TA486A	2
6	2EA26	UP	CRATE 0	1
6	2EA26	DWN	CRATE 0	2
7	2EA31	UP	CRATE 1	1
7	2EA31	DWN	CRATE 1	2
8	2EA36	UP	CRATE 2	1
8	2EA36	DWN	CRATE 2	2
9	2EA41	UP	CRATE 3	1
9	2EA41	DWN	CRATE 3	2
10	2EA46	UP	CRATE 4	1
10	2EA46	DWN	CRATE 4	2
11	2EB1	UP	CRATE 5	1
11	2EB1	DWN	CRATE 5	2
12	2EB6	UP	CRATE 6	1
12	2EB6	DWN	CRATE 6	2
13	2EB11	UP	CRATE 7	1
13	2EB11	DWN	CRATE 7	2
14	2EB16	UP	CRATE 10	1
14	2EB16	DWN	CRATE 10	2
15	2EB21	UP	CRATE 11	1
15	2EB21	DWN	CRATE 11	2
16	2EB26	UP	CRATE 12	1
16	2EB26	DWN	CRATE 12	2
17	2EB31	UP	CRATE 13	1
17	2EB31	DWN	CRATE 13	2

continued

Switch	Location	Set**	Element Affected	TA486A Pwr-Off Input Enabled
18	2EB36	UP	CRATE 14	1
18	2EB36	DWN	CRATE 14	2
19	2EB41	UP	CRATE 15	1
19	2EB41	DWN	CRATE 15	2
20	2EB46	UP	CRATE 16	1
20	2EB46	DWN	CRATE 16	2
21	2EC1	UP	CRATE 17	1
21	2EC1	DWN	CRATE 17	2

**UP — SWITCH PUSHED TOWARD THE TOP OF AUGAT BOARD.
DWN — SWITCH PUSHED TOWARD THE BOTTOM OF AUGAT BOARD.

APPENDIX C

Encoder Format

TA566A ENCODER 1 FORMAT

FRAME SYNC		10111000 / 01000111	
DISCRETE	0	TA493A AND TA493B POWER OK	(CRØ)
WORD 1	1		(CR1)
	2		(CR2)
	3		(CR3)
	4		(CR4)
	5		(CR5)
	6		(CR6)
	7		(CR7)
WORD 2	0		(CR10)
	1		(CR11)
	2		(CR12)
	3		(CR13)
	4		(CR14)
	5		(CR15)
	6		(CR16)
	7	TA493A AND TA493B POWER OK	(CR17)
WORD 3	0	TA484A / TA618 POWER OK	
	1	TA485A POWER OK	
	2	TA486A POWER OK	
	3	TA488A ARMS ENABLE	
	4	TA488A POWER OK	
	5	TA489A POWER OK	
	6	TA566A POWER OK	
	7	TA486A PROGRAMMER RUNNING	
WORD 4	0	TA538 LINE DRIVERS OK	
	1	TA486A STATUS OK	
	2	TA488A STATUS OK	
	3	SYSTEM IN CAL	
	4		
	5		
	6	ØB AC VOLTS OK	
	7	ØC AC VOLTS OK	
WORD 5	0	ØA FREQUENCY OK	
	1	FIDU	
	2	COMPTON	
	3	SPARE	
	4	ARM 1	
	5	ARM 2	
	6	HOLD	
	7	LOCKOUT	
WORD 6		ØA VOLTS (BITS Ø-7) (BINARY VALUE)	
WORD 7		MA164 TEMP (BITS Ø-7) (BINARY VALUE)	

CONDITIONS
"1" = GOOD
"0" = BAD

"1" = RUNNING

"1" = GOOD
"0" = BAD

"1" = IN CAL

"1" = GOOD
"0" = BAD

"1" = RECEIVED

TA566A ENCODER FORMAT

TA566A ENCODER 2 FORMAT

FRAME SYNC		10111000/01000111
DISCRETE	0	OVERTEMP
WORD 1	1	VOLT/FREQ LOSS
	2	CRATE P.S. LOSS
	3	COM EQ P.S. LOSS
	4	
	5	
	6	
	7	
WORD 2	0	
	1	
	2	
	3	
	4	
	5	
	6	
	7	
WORD 3	0	
	1	
	2	
	3	
	4	
	5	
	6	
	7	
WORD 4	0	
	1	
	2	
	3	
	4	
	5	
	6	
	7	
WORD 5	0	
	1	
	2	
	3	
	4	
	5	
	6	
	7	
WORD 6		
WORD 7		

DISTRIBUTION:

EG&G Energy Measurement Groups (4)
Attn: G. Hughes
M. Johnson
P. Martinez
R. Salas
Kirtland AFB
Albuquerque, NM 87115

2514	L. L. Bonzon
2514	R. F. LeBlanc (12)
7120	M. J. Navratil
7121	E. D. Baker
7121	R. A. David
7121	L. W. Ebinger
7121	R. R. Olsberg
7121	J. M. Opalka (2)
7121	S. G. Sevier
7121	D. K. Werling
7123	R. W. Donohoe
7123	L. J. Keck
7123	G. L. Ogle
7124	M. L. Bakos
7124	D. J. Belding
7124	S. E. Dains
7124	D. A. Geene
7124	W. J. Kluesner
7124	P. L. Nelson
8024	P. W. Dean
3141	S. A. Landenberger (5)
3151	W. L. Garner (3)
3154-1	C. H. Dalin (28)
	For DOE/OSTI (Unlimited Release)