SANDIA REPORT
SAND86—2904
Unlimited Release
Printed April 1987

Two-Stage Hybrid Microcircuit Amplifier

MiSuk L. Pyo

Prepared by
Sandia National Laboratories
Albuquerque, New Mexico 87185 and Livermore, California 94550
for the United States Department of Energy
under Contract DE-AC04-76DP00789

When printing a copy of any digitized SAND Report, you are required to update the markings to current standards.

SF2900Q(8-81)

Issued by Sandia National Laboratories, operated for the United States Department of Energy by Sandia Corporation.

NOTICE: This report was prepared as an account of work sponsored by an agency of the United States Government. Neither the United States Government nor any agency thereof, nor any of their employees, nor any of their contractors, subcontractors, or their employees, makes any warranty, express or implied, or assumes any legal liability or responsibility for the accuracy, completeness, or usefulness of any information, apparatus, product, or process disclosed, or represents that its use would not infringe privately owned rights. Reference herein to any specific commercial product, process, or service by trade name, trademark, manufacturer, or otherwise, does not necessarily constitute or imply its endorsement, recommendation, or favoring by the United States Government, any agency thereof or any of their contractors or subcontractors. The views and opinions expressed herein do not necessarily state or reflect those of the United States Government, any agency thereof or any of their contractors or subcontractors.

Printed in the United States of America
Available from
National Technical Information Service
U.S. Department of Commerce
5285 Port Royal Road
Springfield, VA 22161

NTIS price codes
Printed copy: A02
Microfiche copy: A01

SAND86–2904
Unlimited Release
Printed April 1987

Distribution
Category UC–13

Two-Stage Hybrid Microcircuit Amplifier

MiSuk L. Pyo
Microwave and High-Performance Devices Division
Sandia National Laboratories
Albuquerque, NM 87185

Abstract

This report documents the design, development, and fabrication of a two-stage amplifier operating at 400 to 600 MHz. Included are characterization data, predictions generated during design, and measured performance.

Contents

Introduction 5
Amplifier Design 5
Stability Considerations 11
Bias Networks 11
Computer-Aided Design 12
Circuit Fabrication and Performance 17
Summary 24

Figures

1 Diagram of a Two-Stage Amplifier 5
2 Approximate Input Impedance Match Circuit 8
3 Approximate Output Impedance Match Circuit 9
4 Preliminary Schematic of the Amplifier 10
5 dc Bias Network for the HXTR7111 and the HXTR5104 11
6 Revised Schematic 13
7 SUPER-COMPACT Program 14
8 Input and Output Impedance 16
9 Optimized Gain 16
10 Predicted Gain From 50 to 5000 MHz 17
11 Amplifier Schematic 22
12 s-Parameter Plots 22
13 Gain of the Amplifier 23
14 Input Impedance 23
15 Output Impedance 23
16 Power Measurement Setup 24

Tables

1 Two-Stage Amplifier Performance Goals 5
2 HXTR7111 s-Parameter Data 6
3 HXTR5104 s-Parameter Data 7
4 Predicted Performance After SUPER-COMPACT Optimization 16
5 Amplifier s-Parameter Performance 18
6 Amplifier Performance 20
7 Performance Comparison 24

Two-Stage Hybrid Microcircuit Amplifier

Introduction

This report provides design goals, characterization of transistors used, and fabrication rationale for a two-stage amplifier. The intent was to design and build a two-stage amplifier operating at 400 to 600 MHz on a Duroid circuit board using available transistors.

The transistors used in this design were the Hewlett-Packard HXTR7111, a silicon bipolar low-noise, high-performance device, and the HXTR5104, a silicon bipolar high-gain linear output power device.

Amplifier Design

The configuration of the two-stage amplifier is shown in Figure 1. The two transistors were measured on a Hewlett-Packard 8510A automatic network analyzer to obtain their s-parameters. The design was based on s-parameter data and computer optimization, using SUPER-COMPACT to finalize the design. Table 1 gives the desired electrical performance characteristics.

Table 1. Two-Stage Amplifier Performance Goals

Frequency	400–600 MHz
Gain	20 dB
Output power	1 W (30 dBm)
Input/Output impedance	50 Ω
Input/Output return loss	< -10 dB

The HXTR7111 was used in the first stage of the amplifier because of its high gain and its low noise figure. In the second stage, the HXTR5104 was used because of its power output. The s-parameter characterization data for the transistors are listed in Tables 2 and 3. Using this data, the design task was to synthesize input and output networks to provide the complex conjugate impedances to match the input and output of the transistors to 50 Ω.

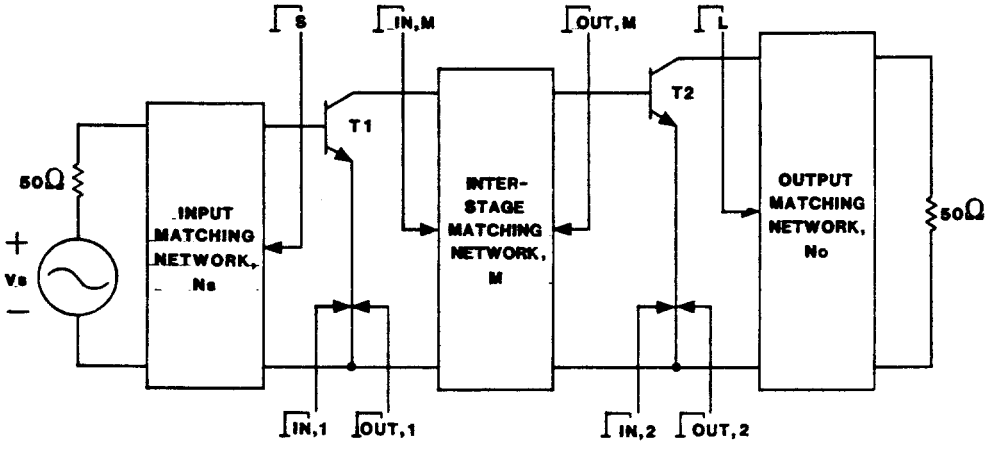

Figure 1. Diagram of a Two-Stage Amplifier

Table 2. HXTR7111 s-Parameter Data

AMP1
DEVICE TYPE HXTR7111
LOT# B999
DATE CODE 8341
FREQUENCY 400MHZ
VOLT.,CURR. 10V,10mA
TODAYS DATE 4/28/86

S/N	S11	S11/_	S21	S21/_	S12	S12/_	S22	S22/_
6	0.660	-112.6	12.495	117.9	0.032	40.5	0.641	-37.3
7	0.665	-113.5	12.481	116.4	0.033	40.6	0.626	-36.9
8	0.660	-113.0	12.433	116.2	0.032	41.3	0.631	-36.6
9	0.657	-112.2	12.454	116.5	0.033	41.1	0.633	-36.8
10	0.655	-108.1	12.262	116.1	0.033	42.4	0.639	-34.9
AVG.	0.659	-111.9	12.425	116.6	0.033	41.2	0.634	-36.5
MAX.	0.665	-108.1	12.495	117.9	0.033	42.4	0.641	-34.9
MIN.	0.655	-113.5	12.262	116.1	0.032	40.5	0.626	-37.3
S.D.	0.003	1.9	0.084	0.7	.000	0.7	0.005	0.8

FREQUENCY 500MHZ

S/N	S11	S11/_	S21	S21/_	S12	S12/_	S22	S22/_
6	0.668	-128.1	10.982	109.4	0.034	37.7	0.582	-39.9
7	0.665	-129.1	10.919	108.0	0.035	37.0	0.569	-39.4
8	0.659	-128.6	10.880	107.9	0.034	38.3	0.574	-39.0
9	0.657	-127.8	10.901	108.1	0.035	37.0	0.575	-39.4
10	0.640	-123.6	10.682	107.9	0.035	38.5	0.585	-37.1
AVG.	0.658	-127.4	10.873	108.3	0.035	37.7	0.577	-39.0
MAX.	0.668	-123.6	10.982	109.4	0.035	38.5	0.585	-37.1
MIN.	0.640	-129.1	10.682	107.9	0.034	37.0	0.569	-39.9
S.D.	0.010	2.0	0.101	0.6	.000	0.6	0.006	1.0

FREQUENCY 600MHZ

S/N	S11	S11/_	S21	S21/_	S12	S12/_	S22	S22/_
6	0.673	-139.4	9.69	102.4	0.036	34.6	0.539	-41.7
7	0.666	-140.6	9.629	100.9	0.037	34.8	0.530	-41.0
8	0.659	-140.0	9.571	100.9	0.037	35.7	0.534	-40.5
9	0.657	-139.1	9.594	101.1	0.037	35.2	0.534	-41.1
10	0.633	-135.1	9.386	101.2	0.037	35.8	0.547	-38.5
AVG.	0.658	-138.8	9.574	101.3	0.037	35.2	0.537	-40.6
MAX.	0.673	-135.1	9.690	102.4	0.037	35.8	0.547	-38.5
MIN.	0.633	-140.6	9.386	100.9	0.036	34.6	0.530	-41.7
S.D.	0.014	1.9	0.102	0.6	.000	0.5	0.006	1.1

Table 3. HXTR5104 s-Parameter Data

AMP2
DEVICE TYPE HXTR5104
LOT# B847
DATE CODE 8334
FREQUENCY 400MHZ
VOLT.,CURR. 18V,110mA
TODAYS DATE 4/28/86

S/N	S11	S11/_	S21	S21/_	S12	S12/_	S22	S22/_
1	0.704	-160.7	9.423	96.8	0.047	36.9	0.323	-89.6
2	0.703	-160.9	9.266	96.7	0.048	33.6	0.328	-90.4
3	0.707	-161.0	9.332	96.5	0.049	35.1	0.314	-92.9
4	0.697	-159.1	9.252	97.7	0.050	35.2	0.340	-88.0
5	0.683	-156.6	9.074	99.8	0.054	35.8	0.375	-90.3
6	0.704	-158.6	9.323	97.2	0.049	35.7	0.327	-88.2
7	0.673	-159.7	9.054	100.6	0.051	38.5	0.382	-87.7
8	0.697	-162.0	9.413	95.5	0.046	35.6	0.316	-91.9
9	0.697	-156.6	9.124	97.7	0.052	35.0	0.336	-84.9
AVG.	0.691	-158.7	9.198	98.2	0.050	36.1	0.347	-88.6
MAX.	0.704	-156.6	9.413	100.6	0.054	38.5	0.382	-84.9
MIN.	0.673	-162.0	9.054	95.5	0.046	35.0	0.316	-91.9
S.D.	0.011	2.0	0.144	1.8	0.003	1.2	0.026	2.4

FREQUENCY 500MHZ

S/N	S11	S11/_	S21	S21/_	S12	S12/_	S22	S22/_
1	0.715	-169.1	7.677	90.1	0.051	35.0	0.270	-98.9
2	0.716	-169.3	7.542	89.9	0.051	33.9	0.277	-99.3
3	0.719	-169.1	7.598	89.9	0.051	34.6	0.262	-103.0
4	0.710	-167.7	7.551	90.8	0.052	32.7	0.284	-96.7
5	0.699	-165.6	7.434	92.6	0.056	33.3	0.316	-100.3
6	0.714	-167.1	7.594	90.4	0.052	32.8	0.274	-97.0
7	0.692	-168.2	7.435	93.2	0.053	35.7	0.322	-97.2
8	0.709	-170.5	7.644	88.9	0.050	34.4	0.267	-100.4
9	0.709	-165.7	7.449	90.8	0.055	32.7	0.278	-92.6
AVG.	0.705	-167.4	7.511	91.2	0.053	33.8	0.291	-97.5
MAX.	0.714	-165.6	7.644	93.2	0.056	35.7	0.322	-92.6
MIN.	0.692	-170.5	7.434	88.9	0.050	32.7	0.267	-100.4
S.D.	0.008	1.8	0.090	1.6	0.002	1.1	0.023	2.8

FREQUENCY 600MHZ

S/N	S11	S11/_	S21	S21/_	S12	S12/_	S22	S22/_
1	0.727	-175.6	6.447	84.4	0.052	34.9	0.236	-107.9
2	0.728	-175.7	6.326	84.3	0.053	34.2	0.244	-107.8
3	0.731	-174.9	6.377	84.3	0.053	35.9	0.229	-113.1
4	0.723	-174.4	6.351	85.1	0.054	33.9	0.249	-105.2
5	0.714	-172.3	6.269	86.7	0.06	32.8	0.281	-109.9
6	0.726	-173.6	6.383	84.8	0.054	34.2	0.238	-105.3
7	0.709	-174.7	6.269	87.2	0.056	34.9	0.283	-106.5
8	0.719	-176.9	6.404	83.3	0.052	35.4	0.238	-108.2
9	0.720	-172.5	6.275	85	0.057	33.4	0.241	-100.9
AVG.	0.718	-174.0	6.320	85.4	0.056	34.1	0.256	-106.2
MAX.	0.726	-172.3	6.404	87.2	0.060	35.4	0.283	-100.9
MIN.	0.709	-176.9	6.269	83.3	0.052	32.8	0.238	-109.9
S.D.	0.006	1.7	0.060	1.4	0.003	0.9	0.021	3.1

In a design requiring overall high gain, the reflection coefficients are selected as follows:

$$\Gamma_S = (\Gamma_{IN,1})^*$$

$$\Gamma_{IN,M} = (\Gamma_{OUT,1})^*$$

$$\Gamma_{OUT,M} = (\Gamma_{IN,2})^*$$

$$\Gamma_L = (\Gamma_{OUT,2})^*$$

The asterisks designate the complex conjugate.

To deliver maximum power to the 50-Ω load, the network must be properly terminated at both the input and output ports. The impedance and admittance values obtained from the Smith chart in Figure 2 were used to calculate the element values for the input and output matching networks for the first stage. The values obtained from the Smith chart in Figure 3 were used to calculate element values for the second-stage matching networks. Figure 4 is a preliminary schematic of the amplifier.

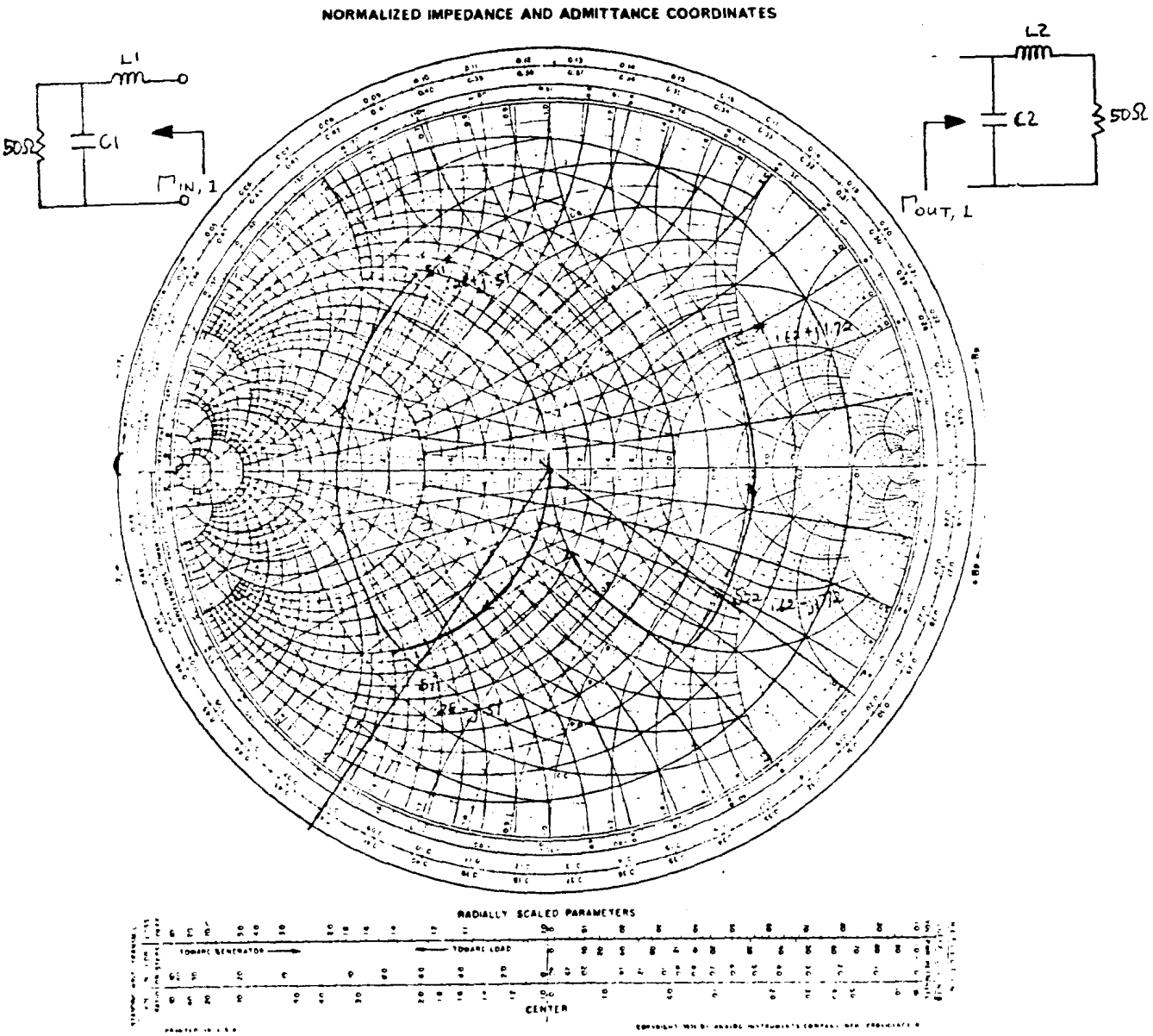

Figure 2. Approximate Input Impedance Match Circuit

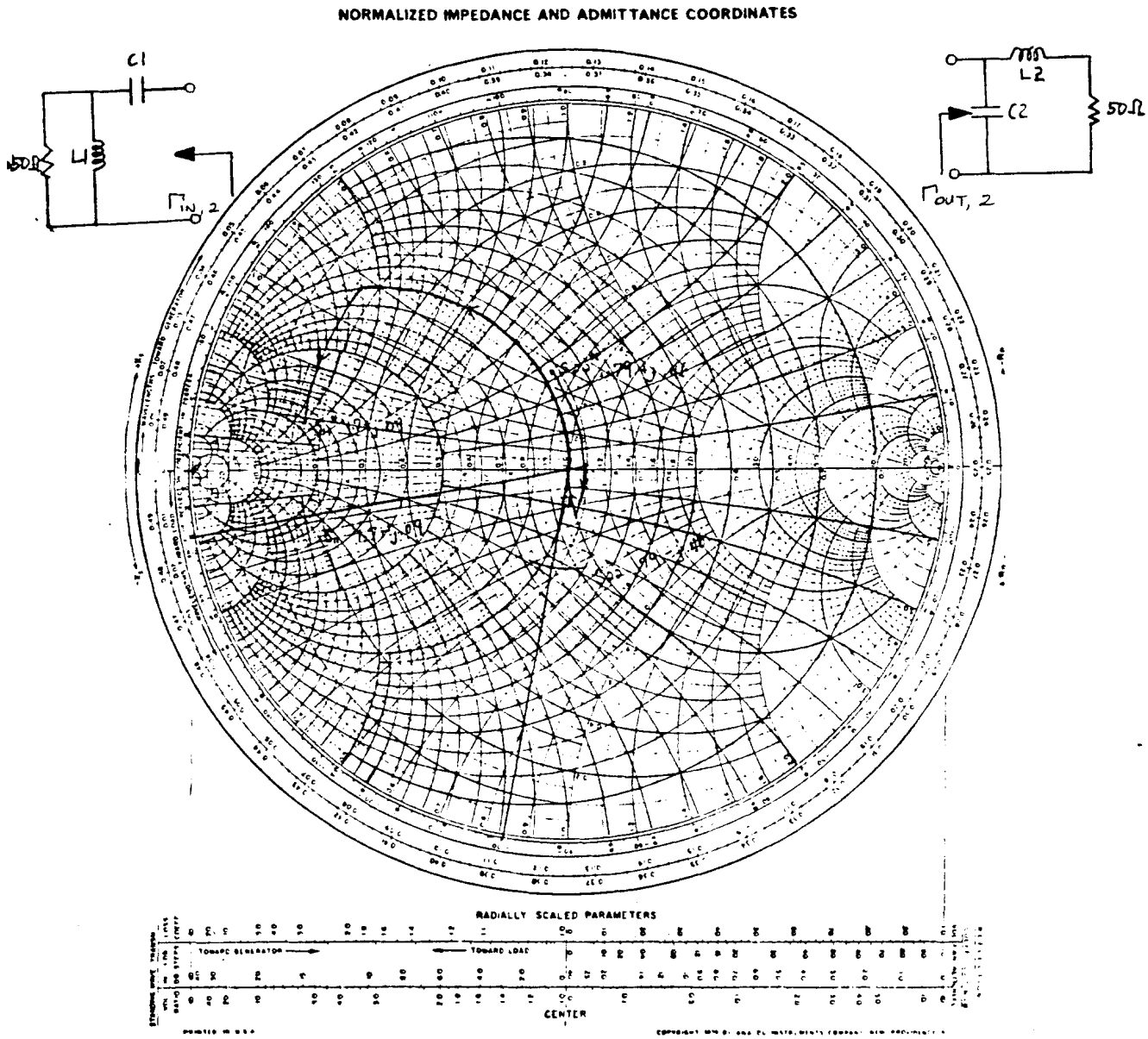

Figure 3. Approximate Output Impedance Match Circuit

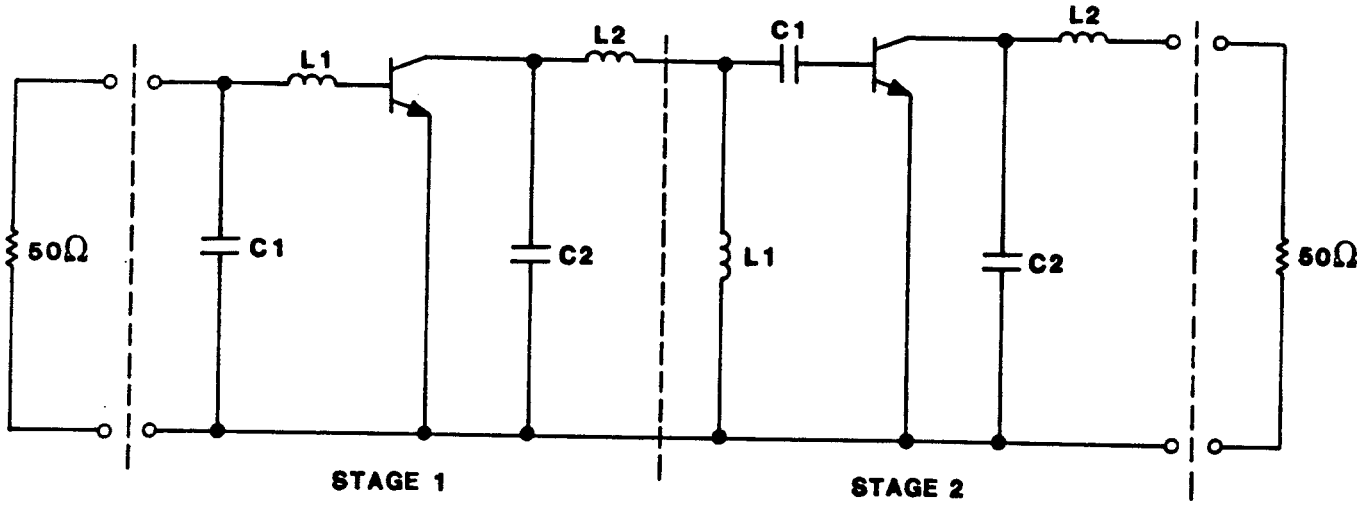

Figure 4. Preliminary Schematic of the Amplifier

Input Element 1:

$$X_C = 30.86\ \Omega$$

$$C1 = \frac{1}{2\pi f X_C} = \frac{1}{2\pi(5\times10^8)\,(30.86)} = 10.3\ \text{pF}$$

$$X_L = 48\ \Omega$$

$$L1 = \frac{X_L}{2\pi f} = \frac{48\ \Omega}{2\pi(5\times10^8)} = 15.3\ \text{nH}$$

Output Element 1:

$$X_C = 64.96\ \Omega$$

$$C2 = \frac{1}{2\pi f X_C} = \frac{1}{2\pi\,(5\times10^8)\,(64.96)} = 4.9\ \text{pF}$$

$$X_L = 76.5\ \Omega$$

$$L2 = \frac{X_L}{2\pi f} = \frac{76.5\ \Omega}{2\pi\,(5\times10^8)} = 24.3\ \text{nH}$$

Input Element 2:

$$X_L = 22.73\ \Omega$$

$$L1 = \frac{X_L}{2\pi f} = \frac{22.73\ \Omega}{2\pi\,(5\times10^8)} = 7.2\ \text{nH}$$

$$X_C = 140.5\ \Omega$$

$$C1 = \frac{1}{2\pi f X_C} = \frac{1}{2\pi\,(5\times10^8)\,(140.5)} = 2.26\ \text{pF}$$

Output Element 2:

$$X_C = 62.5\ \Omega$$

$$C2 = \frac{1}{2\pi f X_C} = \frac{1}{2\pi\,(5\times10^8)\,(62.5)} = 5.1\ \text{pF}$$

$$X_L = 13.5\ \Omega$$

$$L2 = \frac{X_L}{2\pi f} = \frac{13.5}{2\pi\,(5\times10^8)} = 4.3\ \text{nH}$$

Amplifier stability is an important consideration in the design and can be determined from the s-parameters. Calculations on these transistors show both to be potentially unstable at 500 MHz, so more consideration was given to matching the impedance and stabilizing the overall gain of the circuit. Following are the actual s-parameter data and calculations of the stability factors.

HXTR7111 @ 500 MHz:

S11	0.640 ∠−123.6
S21	10.682 ∠−107.9
S12	0.035 ∠38.5
S22	0.585 ∠−37.1

Normalized S11 0.28 − j52 S11* 0.28 + j52

Normalized S22 1.62 − j1.75 S22* 1.62 + j1.75

HXTR5104 @ 500 MHz:

S11	0.715 ∠−169.1
S21	7.677 ∠90.1
S12	0.051 ∠35.0
S22	0.270 ∠−98.9

Normalized S11 1.68 − j0.098 S11* 1.68 − j0.098

Normalized S22 0.79 − j0.47 S22* 0.79 + 0.47.

Stability Considerations

$$|\Gamma_S| < 1$$

$$|\Gamma_L| < 1$$

$$|\Gamma_{IN}| = \left| S11 + \frac{S12S21}{1 - S22\,\Gamma_L} \right| < 1$$

and

$$|\Gamma_{OUT}| = \left| S22 + \frac{S12\,S21\,\Gamma_S}{1 - S11\,\Gamma_S} \right| < 1$$

where all coefficients are normalized to 50 Ω.

The following must be true to have an unconditionally stable circuit:

$$K \text{ (stability factor)} = \frac{1 - |S11|^2 - |S22|^2 + |\Delta|^2}{2\,|S12\,S21|} > 1$$

and

$$1 - |S11|^2 > |S12\,S21|$$

$$1 - |S22|^2 > |S12\,S21|$$

and

$$K > 1$$

$$|\Delta| < 1$$

where

$$|\Delta| = S11\,S22 - S12\,S21\ .$$

For the HXTR7111,

$$|\Delta| = (0.640 \times 0.585) - (10.682 \times 0.035) = 0$$

$$K = \frac{1 - |0.64|^2 - |0.585|^2 + |0|^2}{2\,|0.035 \times 10.682|} = 0.33\ .$$

Therefore, this transistor is potentially unstable at 500 MHz.

For the HXTR5104,

$$|\Delta| = (0.715 \times 0.270) - (0.051 \times 7.677) = 0$$

$$K = \frac{1 - |0.715|^2 - |0.27|^2 + |0.2|^2}{2\,|0.05 \times 7.677|} = 0.59\ .$$

Therefore, this transistor is potentially unstable at 500 MHz.

Bias Networks

Bias networks provide the proper collector-to-emitter voltage and collector current. The bias networks are feedback loops that sense the current and adjust the bias to hold the collector current fixed. Schematics are shown in Figure 5. The collector-to-emitter voltage is fixed by the voltage dividers, R_{b1} and R_{b2}. R_c provides current-limiting to prevent transistor malfunction. The collector and the base connections are made through 1-μH rf chokes to block rf from the dc supply. A large capacitance, C_x, is used in the circuit to allow the transistor to see the 50-Ω load at low frequencies for matching network considerations. C1 and C2 are bypass capacitors to provide an rf shunt for the dc supply.

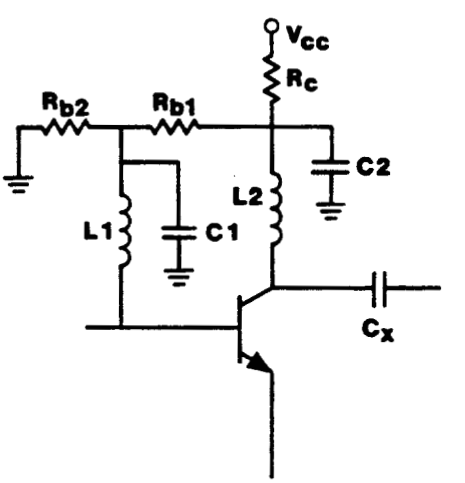

Figure 5. dc Bias Network for the HXTR7111 and the HXTR5104

dc Bias Network for HXTR7111

The design for the dc bias network shown in Figure 5 is $V_{ce} = 10$ V and $I_c = 10$ mA. Assume that $I_{cbo} = 0$, $V_{be} = 0.7$ V, and hFE = 70,

$$hFE = I_c/I_b.$$

The base current is $I_b = I_c/hFE = 10\ mA/70 = 142\ \mu A$.

Assuming V_{bb} to be 2 V,

$$V_{bb} = I_b \times R_b + V_{be}$$

$$R_b = 2\ V - 0.7\ V/142\ \mu A = 9.1\ k\Omega$$

The base resistance, R_b, is equal to R_{b1} in parallel with R_{b2}.

$$R_b = R_{b1} \times R_{b2}/R_{b1} + R_{b2}\ .$$

Let $R_{b2} = 10\ k\Omega$, R_{b1} is obtained from

$$9.1\ k\Omega = R_{b1} \times 10\ k\Omega/R_{b1} + 10\ k\Omega$$

$$R_{b1} = 91\ k\Omega/0.9\ k\Omega$$

$$R_{b1} = 100\ k\Omega,$$

and R_c is obtained from

$$R_c = V_{cc} - V_{ce}/I_c$$

$$R_c = 18\ V - 10\ V/10 \times 10^{-3}$$

$$R_c = 800\ \Omega.$$

rf Consideration:

Let $X_L = 628\ \Omega$ and $X_C = 0.16\ \Omega$ @ 100 MHz

$$X_C = 1/j\omega C = 1/2\pi f$$

$$X_L = j\omega L = 2\pi f L$$

$$L = X_L/2\pi f$$

$$L1,2 = 628\ \Omega/2\pi f = 1\ \mu H$$

$$C = 1/2\pi f X_C$$

$$C1,2 = 1/2\pi f \times 0.16 = 9.9\ nF = 10\ nF$$

dc Bias Network for HXTR5104

The same consideration was applied to the second stage of the amplifier.

The design for the dc bias network (Figure 5) is $V_{ce} = 18$ V and $I_c = 110$ mA. Assume $I_{cbo} = 0$, $V_{be} = 0.7$ V, and hFE = 40,

$$hFE = I_c/I_b\ .$$

The base current is $I_b = I_c/hFE = 110\ mA/40 = 2.75\ mA$.

Assuming $V_{bb} = 2$ V,

$$V_{bb} = I_b \times R_b + V_{be}$$

$$R_b = 2\ V - 0.7\ V/2.75\ mA = 472\ \Omega$$

The base resistance, R_b, is equal to R_{b1} in parallel with R_{b2}.

$$R_b = R_{b1} \times R_{b2}/R_{b1} + R_{b2}\ .$$

Let $R_{b2} = 500\ \Omega$, R_{b1} is obtained from

$$472\ \Omega = R_{b1} \times 500\ \Omega/R_{b1} + 500\ \Omega$$

$$R_{b1} = 236\ k\Omega/28$$

$$R_{b1} = 8.4\ k\Omega,$$

and R_c is obtained from

$$R_c = V_{cc} - V_{ce}/I_c$$

$$R_c = 25\ V - 18\ V/110\ mA$$

$$R_c = 63\ \Omega.$$

Computer-Aided Design

The circuit derived using Smith chart calculations was optimized using SUPER-COMPACT. Stability and impedance matching of the input and output were given the highest weighting factors for the optimization procedure. SUPER-COMPACT then found the best match between the computed response and the desired response.

As mentioned before, one of the design obstacles in this amplifier was that the transistors had too much gain at 400 to 600 MHz. This could cause instability and mismatch of the input and output impedance. Therefore, feedback was added to both stages to reduce the gain and to help stability. The first computer optimization was performed on the circuit that did not have feedback. The result was greatly mismatched and highly unstable; amplifier gain was ~70 dB. The second computer optimization was performed on the circuit with feedback and resulted in significant improvements that included closely matched input and output impedance to 50 Ω over the frequency range flatter gain; the stability factor, k, improved by a reduction of the overall gain.

Figure 6 shows the schematic of the optimized circuit. The computer program for SUPER-COMPACT is given in Figure 7 and the results of the optimized circuit are listed in Table 4. The input and output impedance is shown in Figure 8. The gain of the circuit is shown in Figure 9 and the gain of the amplifier from 50 to 500 MHz is shown in Figure 10.

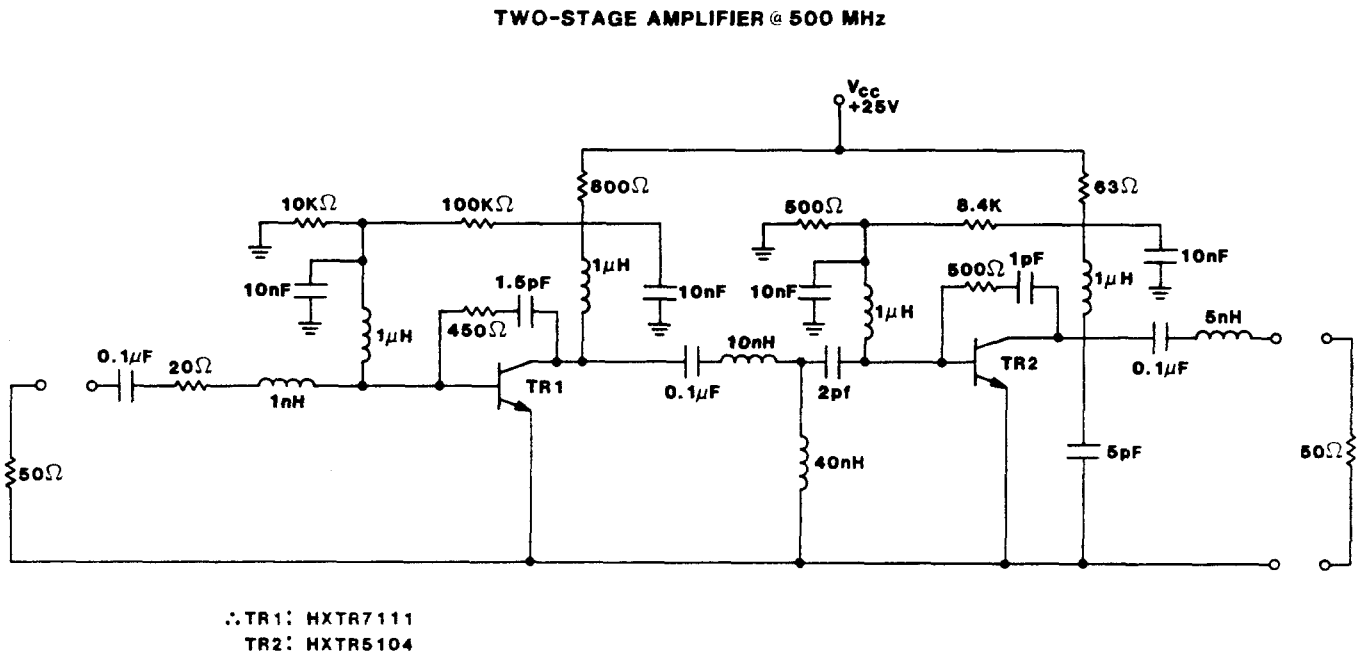

Figure 6. Revised Schematic

```
BLK
   TRL 1 2 W=50MIL P=200MIL MSTRIP
   CAP 2 3 C=.10UF
   TRL 3 4 W=50MIL P=100MIL MSTRIP
   RES 4 5 R=?20?
   TRL 5 6 W=50MIL P=100MIL MSTRIP
   IND 6 7 L=?1NH?
   TRL 7 8 W=50MIL P=200MIL MSTRIP
   IND 7 9 L=1UH
   RES 9 0 R=9100
   CAP 9 0 C=10NF
IMN1: 2PDR 1 8
END
BLK
   RES 1 2 R=?450?
   TRL 2 3 W=50MIL P=300MIL MSTRIP
   CAP 3 4 C=?1.5PF?
FBACK: 2PDR 1 4
END
BLK
   TRL 1 2 W=50MIL P=200MIL MSTRIP
   RES 9 0 R=800
   IND 1 9 L=1UH
   CAP 9 0 C=10NF
   CAP 2 3 C=.1UF
   TRL 3 4 W=50MIL P=100MIL MSTRIP
   IND 4 5 L=?10NH?
OMN1: 2PDR 1 5
END
BLK
    TRL 1 2 W=50MIL P=200MIL MSTRIP
    IND 1 0 L=?40NH?
    CAP 2 3 C=?2PF?
    TRL 3 4 W=50MIL P=200MIL MSTRIP
    IND 3 9 L=1UH
    RES 9 0 R=475
    CAP 9 0 C=10NF
IMN2: 2PDR 1 4
END
BLK
   RES 1 2 R=?500?
   TRL 2 3 W=50MIL P=300MIL MSTRIP
   CAP 3 4 C=?1PF?
FBACK2: 2PDR 1 4
END
BLK
    TRL 1 2 W=50MIL P=300MIL MSTRIP
    IND 1 9 L=1UH
    RES 9 0 R=63
    CAP 9 0 C=10NH
    CAP 2 3 C=.1UF
    CAP 2 0 C=?5PF?
    TRL 3 4 W=50MIL P=100MIL MSTRIP
    IND 4 5 L=?5NH?
    TRL 5 6 W=50MIL P=200MIL MSTRIP
OMN2: 2PDR 1 6
END
BLK
   IMN1 1 2
   TWO 2 3 Q1
   FBACK 2 3
   OMN1 3 4
   IMN2 4 5
   TWO 5 6 Q2
   FBACK 5 6
   OMN2 6 7
AMP1: 2PDR 1 7
END
```

Figure 7. SUPER-COMPACT Program (continued on next page)

```
FREQ
   STEP 300MHZ 700MHZ 100MHZ
END
OPT
   AMP1 F=300MHZ MS11=0 W=10000 MS22=0 W=10000 MS21=25DB W=10000
   AMP1 F=500MHZ MS11=0 W=10000 MS22=0 W=10000 MS21=25DB W=10000
   AMP1 F=700MHZ MS11=0 W=10000 MS22=0 W=10000 MS21=25DB W=10000
END
OUT
PRI AMP1 S
END
DATA
   Q1:S
   100MHZ .769 -31.1 16.512 158.2 .014 72.7 .932 -14.6
   200MHZ .712 -61.0 15.569 140.6 .024 57.2 .821 -25.1
   300MHZ .676 -87.3 13.964 126.9 .029 47.1 .716 -31.5
   400MHZ .655 -108.1 12.262 116.1 .033 42.4 .639 -34.9
   500MHZ .640 -123.6 10.682 107.9 .035 38.5 .585 -37.1
   600MHZ .633 -135.1 9.386 101.2 .037 35.8 .547 -38.5
   700MHZ .625 -144.3 8.286 95.4 .039 35.2 .521 -39.8
   1000MHZ .617 -162.5 6.123 82.5 .043 34.0 .476 -43.7
   1500MHZ .613 179.3 4.188 66.3 .049 34.9 .451 -51.8
   2000MHZ .614 166.2 3.183 52.6 .058 36.8 .446 -61.7
   2500MHZ .612 156.4 2.592 41.8 .066 38.2 .450 -70.6
   3000MHZ .606 146.1 2.096 31.3 .074 40.0 .458 -76.0
   3500MHZ .610 136.6 1.846 20.5 .086 36.4 .488 -87.7
   4000MHZ .613 127.2 1.635 9.2 .097 32.6 .503 -99.7
   4500MHZ .611 117.5 1.440 -2.1 .105 28.4 .504 -111.4
   5000MHZ .608 107.2 1.245 -12.6 .114 30.6 .508 -119.3
   Q2:S
   100MHZ .532 -90.0 23.318 141.9 .028 57.4 .766 -38.2
   200MHZ .635 -129.4 16.423 118.7 .039 42.4 .544 -63.4
   300MHZ .681 -148.6 12.108 105.8 .045 36.0 .408 -78.5
   400MHZ .704 -160.7 9.423 96.8 .047 36.9 .323 -89.6
   500MHZ .715 -169.1 7.677 90.1 .051 35.0 .270 -98.9
   600MHZ .727 -175.6 6.447 84.4 .052 34.9 .236 -107.9
   700MHZ .736 179.1 5.543 79.4 .055 35.8 .211 -116.0
   1000MHZ .761 167.3 3.838 67.4 .063 38.7 .189 -139.9
   1500MHZ .796 154.5 2.459 51.0 .072 43.8 .229 -166.9
   2000MHZ .823 146.6 1.748 37.6 .086 46.6 .306 -177.9
   2500MHZ .839 143.2 1.327 27.9 .096 51.7 .385 178.2
   3000MHZ .855 141.4 1.066 19.3 .113 53.2 .463 177.1
   3500MHZ .859 140.1 .887 13.8 .127 55.5 .527 178.9
   4000MHZ .859 139.3 .789 8.5 .151 54.9 .592 -179.4
   4500MHZ .852 137.0 .717 2.9 .172 54.8 .638 -176.7
   5000MHZ .823 130.5 .678 -4.3 .200 49.1 .682 -173.3
MSTRIP: MS H=23MIL ER=6.29 TAND=.0016 MET1=CU 8.3MIL
END
```

Figure 7. (concluded)

Table 4. Predicted Performance After SUPER-COMPACT Optimization

SUPER COMPACT Optimized Data

SUPER COMPACT PC 09/02/86 13:59:11

Freq MHz	MS11 mag AMP1	PS11 deg AMP1	MS21 mag AMP1	PS21 deg AMP1	MS12 mag AMP1	PS12 deg AMP1	MS22 mag AMP1	PS22 deg AMP1	MS21 dB AMP1	K AMP1
300.000	0.364	166.2	18.160	-63.5	0.001	75.9	0.147	161.6	25.18	42.63
400.000	0.211	107.6	20.646	-115.1	0.001	44.2	0.168	-175.8	26.30	29.65
500.000	0.104	29.5	20.491	-166.1	0.001	9.4	0.244	-172.6	26.23	23.19
600.000	0.093	-68.4	18.028	148.0	0.001	-20.0	0.336	177.0	25.12	22.60
700.000	0.122	-126.9	15.389	107.9	0.001	-42.5	0.419	164.9	23.74	21.91

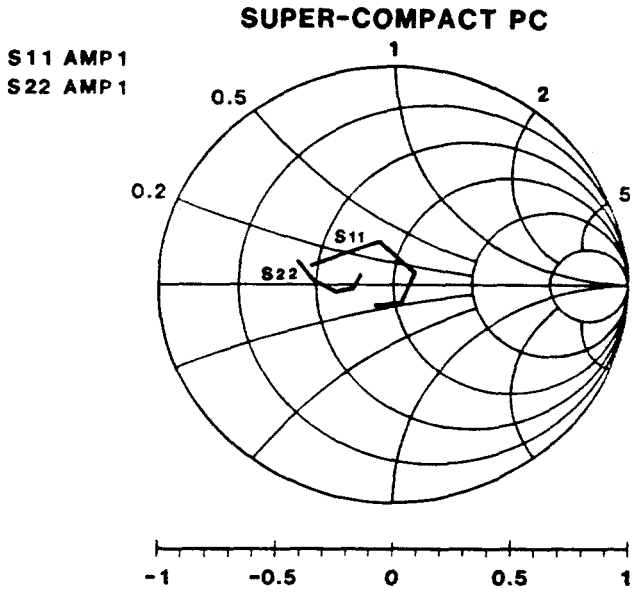

Figure 8. Input and Output Impedance

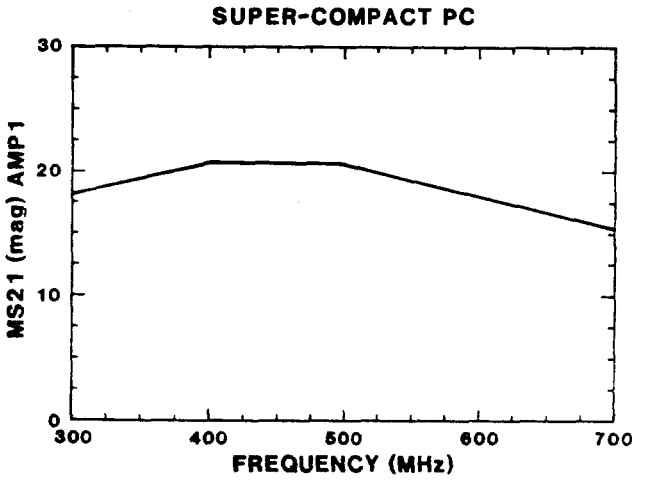

Figure 9. Optimized Gain

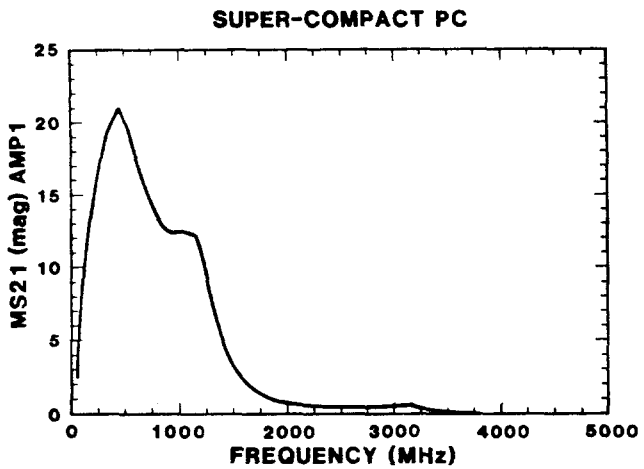

Figure 10. Predicted Gain From 50 to 500 MHz

Circuit Fabrication and Performance

The circuit shown in Figure 6 was built on 0.025-in. Duroid board. This material has a dielectric constant of 10.20. All passive elements except the 1-μH inductor were chip devices; the 1-μH inductor was formed from a short length of wire. To prevent the possibility of damage, passive elements were soldered to the board before the transistors were mounted.

The input and output impedances of the assembled amplifier were measured for their operating performance across a Hewlett-Packard 8510A automatic network analyzer. The output impedance was inductive because the transistors could not be mounted flat onto the Duroid board. To compensate for the lead inductance, it was necessary to modify both the output and interstage matching networks. The output matching inductor was replaced by a 27-Ω resistor and the interstage matching capacitor value was increased from 2 to 7.1 pF. Performance was near optimum for these transistors (Tables 5 and 6). The final schematic is shown in Figure 11. A plot of all four amplifier s-parameters is shown in Figure 12. Gain of the amplifier is shown in Figure 13. Figures 14 and 15 show input and output impedances, respectively. The power was measured using a Hewlett-Packard 436A power meter. A block diagram of the power measurement setup is shown in Figure 16. Table 7 compares the desired with the measured performances.

Table 5. Amplifier s-Parameter Performance

2-STAGE AMPLIFIER

BIAS:25V,100mA

FREQUENCY MHz	S11 MAG	S11 ANG	S21 MAG	S21 ANG	S12 MAG	S12 ANG	S22 MAG	S22 ANG
100.0000	.856	-95.1	25.256	11.3	.001	16.8	.298	-27.7
110.0000	.828	-108.9	28.332	-1.3	.002	-156.3	.327	-32.1
120.0000	.779	-121.3	30.254	-14.1	0.000	61.6	.328	-35.3
130.0000	.727	-133.7	32.337	-26.4	.001	84.9	.339	-40.1
140.0000	.675	-145.1	33.535	-38.4	.002	104.8	.344	-43.9
150.0000	.625	-156.2	35.029	-50.0	.001	108.0	.353	-48.4
160.0000	.579	-167.0	36.283	-61.0	.002	13.2	.358	-51.8
170.0000	.531	-177.6	37.481	-71.8	.001	48.9	.366	-56.9
180.0000	.483	172.1	38.408	-82.5	.001	83.7	.367	-61.8
190.0000	.446	161.7	39.283	-93.2	.001	-23.3	.370	-66.5
200.0000	.405	151.1	40.141	-103.8	0.000	131.0	.372	-71.4
210.0000	.365	140.0	40.789	-114.4	.002	85.5	.370	-76.4
220.0000	.326	128.9	41.198	-125.1	.001	5.9	.362	-81.0
230.0000	.290	117.6	41.395	-135.8	0.000	104.4	.361	-85.1
240.0000	.250	105.7	41.498	-146.5	.002	54.2	.355	-90.7
250.0000	.215	93.3	41.305	-157.1	.002	23.0	.349	-94.2
260.0000	.182	79.5	40.989	-168.5	.002	31.5	.338	-99.6
270.0000	.150	62.9	40.280	-179.0	.001	40.6	.334	-103.4
280.0000	.123	43.8	39.422	170.5	0.000	-46.4	.325	-106.4
290.0000	.102	22.6	38.135	160.2	.002	28.2	.320	-110.4
300.0000	.087	-1.3	36.635	150.3	.002	85.8	.313	-113.1
310.0000	.080	-29.4	35.181	140.6	.003	-75.4	.304	-116.6
320.0000	.084	-56.0	33.702	131.1	.001	4.4	.301	-119.3
330.0000	.091	-76.0	32.083	121.9	.003	-75.0	.293	-122.2
340.0000	.101	-94.5	30.439	113.0	.002	-47.1	.289	-125.2
350.0000	.113	-108.3	28.948	104.4	.002	-66.6	.288	-128.1
360.0000	.124	-119.8	27.467	96.1	.002	-141.9	.279	-130.7
370.0000	.129	-131.3	26.023	88.1	.003	-91.8	.276	-133.9
380.0000	.137	-140.0	24.590	80.8	.001	-132.9	.273	-137.3
390.0000	.148	-149.2	23.265	73.2	.001	13.7	.272	-139.7
400.0000	.153	-157.9	22.194	66.2	.001	-45.5	.268	-143.0
410.0000	.157	-165.5	21.131	59.4	.002	-84.7	.269	-145.7
420.0000	.159	-171.6	20.194	52.5	.002	-61.3	.267	-149.2
430.0000	.160	-177.9	19.157	45.8	0.000	-136.3	.263	-151.9
440.0000	.166	175.6	18.354	39.1	.003	-89.3	.265	-154.5
450.0000	.166	170.1	17.544	32.9	.002	-144.8	.256	-157.9
460.0000	.168	163.3	16.759	26.6	.002	-58.4	.252	-161.2
470.0000	.167	158.1	16.111	20.5	.002	-81.7	.249	-164.0
480.0000	.168	151.4	15.502	14.4	.001	-155.7	.248	-167.0
490.0000	.165	147.2	14.890	8.5	.002	175.8	.244	-169.9
500.0000	.165	141.5	14.404	2.7	.002	-110.9	.242	-172.9
510.0000	.168	136.0	13.902	-3.2	.002	-96.9	.238	-175.8
520.0000	.169	129.7	13.559	-9.0	.001	-15.9	.238	-179.2
530.0000	.167	125.2	13.102	-14.9	0.000	83.1	.234	178.2
540.0000	.160	119.6	12.729	-20.6	.001	38.9	.232	175.0
550.0000	.160	114.0	12.427	-26.4	.001	-57.0	.228	171.8
560.0000	.155	108.4	12.133	-32.4	.001	-146.7	.226	168.5
570.0000	.154	101.8	11.869	-38.0	.001	-103.9	.223	165.9
580.0000	.153	97.0	11.614	-43.8	.001	-167.7	.217	162.5
590.0000	.150	91.1	11.376	-49.6	.001	92.8	.215	159.4
600.0000	.145	84.5	11.123	-55.4	.002	-87.1	.209	156.6
610.0000	.143	78.9	10.952	-61.3	.001	-140.8	.204	154.2

Below-band performance was measured to be sure there was no instability in this region.

continued

Table 5. Concluded

620.0000	.143	72.8	10.783	-66.9	.002	-157.4	.205	151.4
630.0000	.140	66.4	10.629	-73.0	.002	178.5	.200	147.9
640.0000	.136	59.9	10.528	-78.9	0.000	-18.8	.196	145.5
650.0000	.132	52.7	10.412	-85.0	.001	60.5	.193	142.8
660.0000	.129	45.0	10.289	-91.3	.002	124.5	.186	139.3
670.0000	.130	36.9	10.206	-97.5	.002	162.9	.184	136.6
680.0000	.128	28.8	10.149	-104.0	.001	178.6	.178	134.1
690.0000	.128	21.2	10.129	-110.8	.001	143.7	.174	130.5
700.0000	.125	10.5	10.008	-117.6	.002	45.9	.167	127.6
710.0000	.124	2.8	9.933	-124.7	.001	-159.8	.166	125.6
720.0000	.124	-7.9	9.831	-131.7	.001	108.3	.155	122.8
730.0000	.125	-18.1	9.722	-138.9	.002	136.0	.150	121.0
740.0000	.124	-28.1	9.595	-146.3	.002	137.2	.147	117.5
750.0000	.125	-38.5	9.457	-154.0	.001	66.4	.138	116.8
760.0000	.131	-49.0	9.307	-161.6	.001	33.9	.133	115.2
770.0000	.130	-60.0	9.124	-169.5	.003	86.6	.129	112.8
780.0000	.132	-69.2	8.923	-177.2	.002	141.9	.123	111.5
790.0000	.139	-80.4	8.690	174.7	.001	69.5	.117	110.4
800.0000	.142	-89.4	8.421	166.6	0.000	173.5	.114	110.2
810.0000	.144	-98.9	8.138	158.6	.002	58.3	.112	111.0
820.0000	.145	-107.7	7.805	150.5	.003	5.9	.107	110.2
830.0000	.147	-116.7	7.479	142.8	.003	13.2	.108	109.0
840.0000	.153	-125.3	7.128	134.9	.001	126.4	.107	109.6
850.0000	.155	-131.9	6.735	126.8	.003	1.2	.101	107.5
860.0000	.156	-140.0	6.402	119.4	.002	166.0	.106	110.1
870.0000	.158	-145.8	6.064	111.7	.005	-18.4	.101	106.0
880.0000	.151	-152.7	5.727	105.0	.003	-35.9	.104	105.7
890.0000	.157	-158.6	5.342	98.0	.001	143.0	.104	103.5
900.0000	.159	-165.0	5.059	91.4	.001	-160.3	.104	105.6
910.0000	.157	-170.1	4.747	84.5	.002	-10.4	.101	104.3
920.0000	.156	-174.7	4.494	78.1	.002	52.2	.103	98.5
930.0000	.154	-178.9	4.184	72.1	.002	-20.3	.104	98.0
940.0000	.155	178.0	3.956	65.4	.002	-73.2	.097	98.1
950.0000	.150	174.0	3.699	59.7	.002	-17.0	.105	93.8
960.0000	.150	170.3	3.460	53.8	.004	-71.4	.100	94.4
970.0000	.153	166.6	3.269	48.4	.002	-19.3	.095	92.0
980.0000	.149	163.4	3.094	42.2	.003	-4.2	.101	93.3
990.0000	.149	161.0	2.889	37.4	0.000	-122.4	.096	87.4
1000.0000	.146	157.9	2.746	31.5	.002	-105.6	.092	87.3
1010.0000	.149	156.0	2.586	26.6	.002	-1.9	.094	88.6
1020.0000	.147	153.0	2.438	21.0	.001	-39.7	.091	82.7
1030.0000	.151	150.6	2.291	16.4	.001	-110.3	.090	83.9
1040.0000	.150	148.9	2.193	11.1	.002	22.5	.084	83.4
1050.0000	.150	147.9	2.058	6.1	.001	-46.7	.089	80.1
1060.0000	.151	146.6	1.986	.9	.001	130.8	.083	78.4
1070.0000	.150	143.7	1.858	-3.9	.002	-80.1	.083	76.1
1080.0000	.153	143.2	1.752	-8.9	.002	-33.3	.084	79.5
1090.0000	.154	139.6	1.696	-13.2	.002	-140.8	.080	72.7
1100.0000	.152	139.2	1.598	-18.6	.002	137.0	.072	73.8

Above-band performance was measured to be sure there was no instability above the band of interest.

Table 6. Amplifier Performance

2-STAGE AMPLIFIER

BIAS:25V,100mA

FREQUENCY MHz	GUmax dB	GAmax dB	|S21|^2 dB	|S12|^2 dB	K	Delay nsec	Mason's U dB	G1 dB	G2 dB
100.0000	34.18	34.03	28.05	-60.74	5.48	3.499	34.862	5.73	.40
110.0000	34.56	35.15	29.05	-54.66	2.45	3.499	33.587	5.02	.49
120.0000	34.16	34.11	29.62	-68.92	16.44	3.557	34.167	4.05	.49
130.0000	34.00	33.88	30.19	-56.91	4.68	3.395	33.510	3.27	.53
140.0000	33.70	33.68	30.51	-54.53	3.90	3.355	32.790	2.65	.55
150.0000	33.62	33.61	30.89	-56.63	5.22	3.205	32.861	2.15	.58
160.0000	33.56	33.35	31.19	-53.16	3.88	3.069	33.596	1.77	.60
170.0000	33.54	33.47	31.48	-60.80	9.28	2.994	33.221	1.44	.62
180.0000	33.47	33.44	31.69	-57.14	6.30	2.966	32.792	1.16	.63
190.0000	33.48	33.40	31.88	-57.70	6.92	2.971	33.600	.96	.64
200.0000	33.50	33.52	32.07	-66.14	18.11	2.953	33.379	.78	.65
210.0000	33.47	33.48	32.21	-54.48	4.90	2.952	32.669	.62	.64
220.0000	33.39	33.33	32.30	-57.32	7.07	2.970	32.921	.49	.61
230.0000	33.33	33.33	32.34	-76.29	62.72	2.965	33.296	.38	.61
240.0000	33.23	33.21	32.36	-54.52	5.32	2.964	32.468	.28	.58
250.0000	33.09	33.05	32.32	-53.83	5.07	2.964	32.229	.21	.57
260.0000	32.93	32.91	32.25	-56.25	6.84	3.147	32.330	.15	.53
270.0000	32.71	32.71	32.10	-57.22	7.86	2.924	32.290	.10	.51
280.0000	32.47	32.46	31.91	-68.75	30.63	2.902	32.348	.07	.49
290.0000	32.14	32.15	31.63	-56.29	7.62	2.879	31.763	.05	.47
300.0000	31.76	31.78	31.28	-53.30	5.66	2.759	32.094	.03	.45
310.0000	31.38	31.36	30.93	-51.51	4.89	2.679	30.652	.03	.42
320.0000	30.99	31.00	30.55	-63.67	20.44	2.635	30.871	.03	.41
330.0000	30.55	30.54	30.13	-49.41	4.24	2.550	29.601	.04	.39
340.0000	30.09	30.10	29.67	-52.51	6.32	2.474	29.472	.04	.38
350.0000	29.66	29.67	29.23	-52.39	6.54	2.404	29.034	.06	.38
360.0000	29.20	29.18	28.78	-54.00	8.34	2.299	28.898	.07	.35
370.0000	28.72	28.72	28.31	-50.36	5.80	2.231	28.000	.07	.34
380.0000	28.23	28.23	27.82	-58.36	15.33	2.030	27.993	.08	.34
390.0000	27.76	27.77	27.33	-62.74	26.65	2.102	27.852	.10	.33
400.0000	27.35	27.36	26.92	-61.38	23.90	1.947	27.289	.10	.32
410.0000	26.93	26.94	26.50	-56.08	13.65	1.892	26.681	.11	.33
420.0000	26.54	26.55	26.10	-54.17	11.45	1.907	26.391	.11	.32
430.0000	26.07	26.07	25.65	-67.23	54.46	1.856	25.989	.11	.31
440.0000	25.71	25.72	25.27	-51.38	9.15	1.862	25.421	.12	.32
450.0000	25.30	25.29	24.88	-54.10	13.17	1.728	24.967	.12	.29
460.0000	24.89	24.91	24.49	-53.65	13.05	1.753	24.929	.12	.28
470.0000	24.54	24.55	24.14	-55.43	16.72	1.690	24.490	.12	.28
480.0000	24.21	24.20	23.81	-58.80	25.66	1.699	24.039	.12	.28
490.0000	23.84	23.84	23.46	-55.69	18.75	1.633	23.614	.12	.27
500.0000	23.55	23.55	23.17	-55.08	18.04	1.621	23.456	.12	.26
510.0000	23.24	23.24	22.86	-55.62	19.91	1.644	23.227	.12	.25
520.0000	23.03	23.03	22.64	-58.24	27.54	1.600	23.189	.13	.25
530.0000	22.71	22.71	22.35	-68.54	93.72	1.642	22.706	.12	.24
540.0000	22.45	22.45	22.10	-62.70	49.43	1.589	22.493	.11	.24
550.0000	22.23	22.24	21.89	-57.68	28.44	1.597	22.368	.11	.23
560.0000	22.01	22.01	21.68	-60.20	39.06	1.669	21.966	.11	.23
570.0000	21.81	21.82	21.49	-62.14	49.97	1.557	21.851	.10	.22
580.0000	21.61	21.61	21.30	-58.36	33.20	1.606	21.538	.10	.21
590.0000	21.43	21.42	21.12	-59.26	37.67	1.623	21.331	.10	.21
600.0000	21.21	21.22	20.92	-55.59	25.30	1.609	21.363	.09	.19
610.0000	21.07	21.07	20.79	-56.67	29.19	1.640	21.092	.09	.19

Below-band performance was measured to be sure there was no instability in this region.

continued

Table 6. Concluded

620.0000	20.93	20.93	20.65	-55.35	25.50	1.552	20.927	.09	.19
630.0000	20.79	20.79	20.53	-53.70	21.46	1.686	20.725	.09	.18
640.0000	20.70	20.70	20.45	-69.08	127.55	1.646	20.715	.08	.17
650.0000	20.59	20.59	20.35	-58.27	37.24	1.684	20.494	.08	.16
660.0000	20.47	20.47	20.25	-54.99	25.95	1.776	20.337	.07	.15
670.0000	20.40	20.40	20.18	-55.65	28.21	1.715	20.373	.07	.15
680.0000	20.34	20.34	20.13	-58.98	41.71	1.813	20.361	.07	.14
690.0000	20.32	20.31	20.11	-57.56	35.58	1.884	20.282	.07	.13
700.0000	20.20	20.20	20.01	-56.31	31.28	1.886	20.065	.07	.12
710.0000	20.13	20.13	19.94	-58.18	39.07	1.957	20.221	.07	.12
720.0000	20.03	20.02	19.85	-60.25	50.34	1.941	19.981	.07	.11
730.0000	19.92	19.92	19.75	-56.20	31.96	2.019	19.931	.07	.10
740.0000	19.80	19.80	19.64	-55.90	31.33	2.061	19.834	.07	.10
750.0000	19.67	19.67	19.52	-56.75	35.15	2.116	19.573	.07	.08
760.0000	19.53	19.53	19.38	-59.97	51.69	2.121	19.449	.08	.08
770.0000	19.35	19.35	19.20	-51.23	19.33	2.184	19.292	.07	.07
780.0000	19.15	19.15	19.01	-54.63	29.25	2.158	19.264	.08	.07
790.0000	18.92	18.92	18.78	-63.51	83.34	2.251	18.911	.08	.06
800.0000	18.65	18.65	18.51	-66.39	119.79	2.242	18.688	.09	.06
810.0000	18.36	18.35	18.21	-55.19	34.18	2.221	18.331	.09	.05
820.0000	17.99	17.99	17.85	-49.44	18.42	2.239	17.798	.09	.05
830.0000	17.62	17.62	17.48	-51.62	24.67	2.163	17.509	.09	.05
840.0000	17.21	17.21	17.06	-57.51	50.83	2.192	17.297	.10	.05
850.0000	16.72	16.71	16.57	-49.72	21.98	2.247	16.601	.11	.04
860.0000	16.28	16.28	16.13	-55.53	45.03	2.060	16.348	.11	.05
870.0000	15.81	15.81	15.65	-46.91	17.66	2.114	15.651	.11	.04
880.0000	15.31	15.30	15.16	-50.99	29.91	1.872	15.196	.10	.05
890.0000	14.71	14.71	14.55	-57.36	66.63	1.956	14.754	.11	.05
900.0000	14.24	14.24	14.08	-59.96	94.82	1.810	14.227	.11	.05
910.0000	13.68	13.68	13.53	-55.43	60.08	1.933	13.674	.11	.04
920.0000	13.21	13.20	13.05	-56.44	71.32	1.787	13.257	.11	.05
930.0000	12.58	12.58	12.43	-55.57	69.30	1.668	12.579	.10	.05
940.0000	12.09	12.09	11.95	-56.24	79.25	1.847	12.053	.11	.04
950.0000	11.51	11.51	11.36	-52.40	54.50	1.574	11.524	.10	.05
960.0000	10.93	10.93	10.78	-48.20	35.92	1.640	10.864	.10	.04
970.0000	10.43	10.43	10.29	-55.35	86.64	1.503	10.446	.10	.04
980.0000	9.95	9.95	9.81	-50.54	52.65	1.725	10.001	.10	.04
990.0000	9.35	9.35	9.21	-66.97	374.05	1.347	9.342	.10	.04
1000.0000	8.90	8.90	8.77	-52.79	77.03	1.629	8.869	.09	.04
1010.0000	8.39	8.39	8.25	-55.09	106.52	1.361	8.419	.10	.04
1020.0000	7.87	7.87	7.74	-65.45	372.63	1.545	7.877	.09	.04
1030.0000	7.34	7.34	7.20	-59.18	192.43	1.296	7.325	.10	.04
1040.0000	6.95	6.95	6.82	-53.50	104.70	1.454	6.983	.10	.03
1050.0000	6.40	6.40	6.27	-59.18	214.29	1.406	6.412	.10	.03
1060.0000	6.09	6.09	5.96	-61.69	296.74	1.444	6.081	.10	.03
1070.0000	5.51	5.51	5.38	-52.66	112.22	1.322	5.517	.10	.03
1080.0000	5.01	5.01	4.87	-52.63	118.40	1.386	5.028	.10	.03
1090.0000	4.72	4.72	4.59	-53.80	140.11	1.215	4.707	.10	.03
1100.0000	4.20	4.20	4.07	-55.47	180.41	1.479	4.184	.10	.02

Above-band performance was measured to be sure there was no instability above the band of interest.

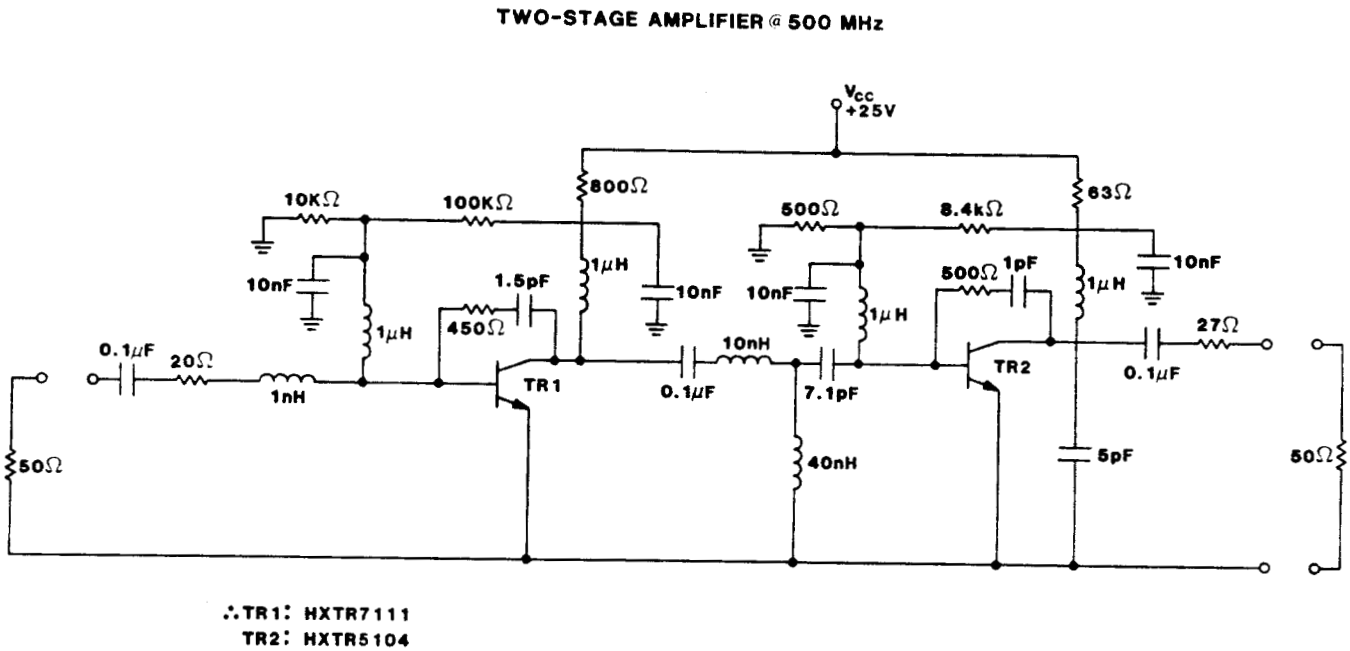

Figure 11. Amplifier Schematic

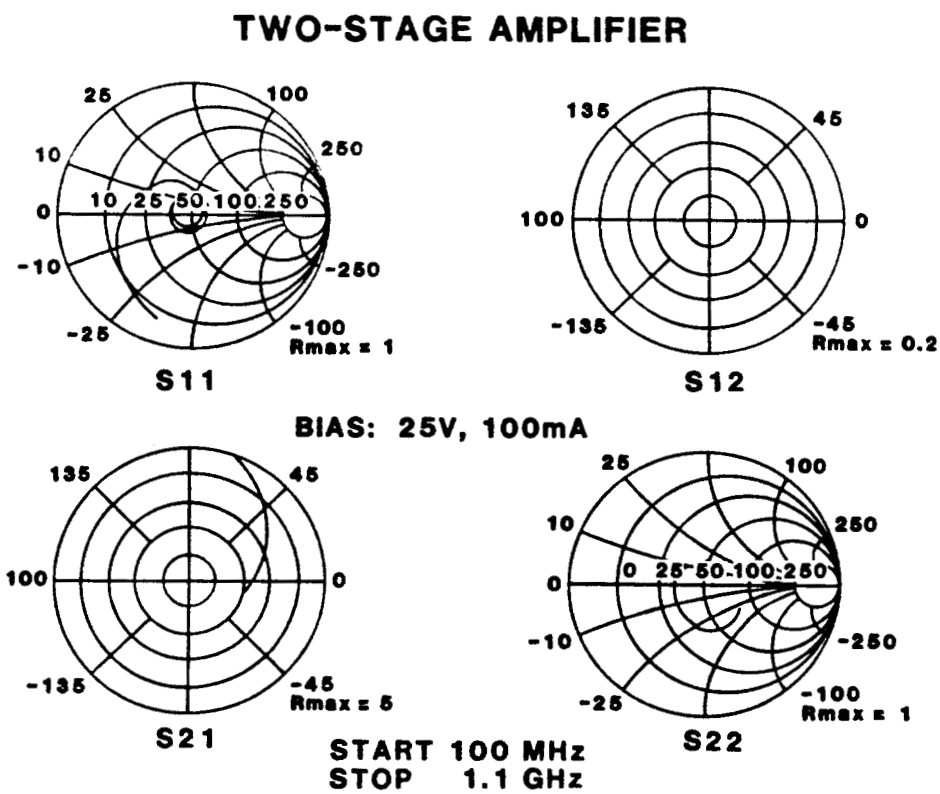

Figure 12. s-Parameter Plots

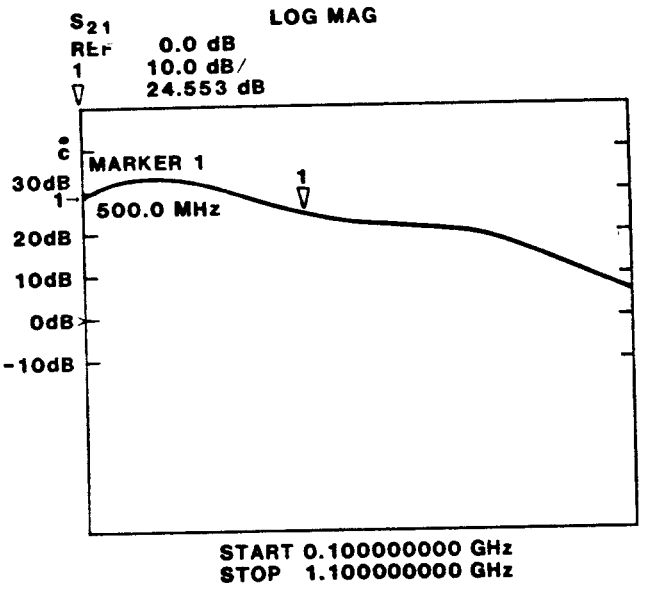

Figure 13. Gain of the Amplifier

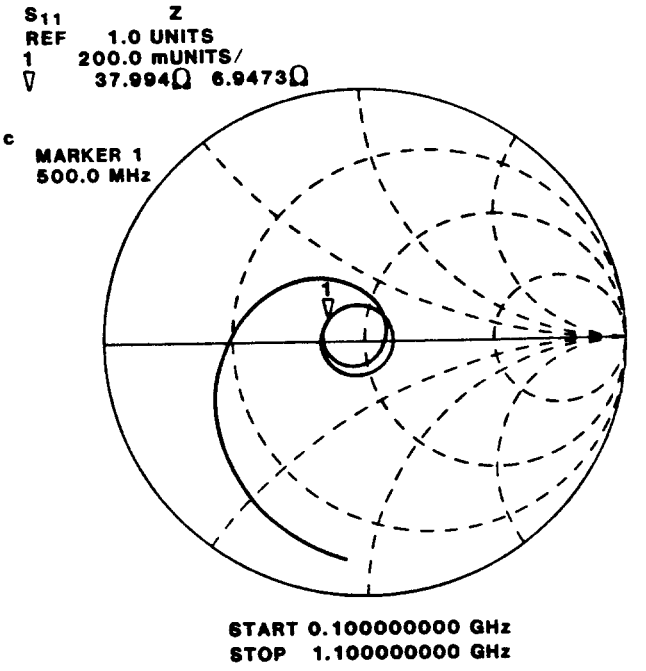

Figure 14. Input Impedance

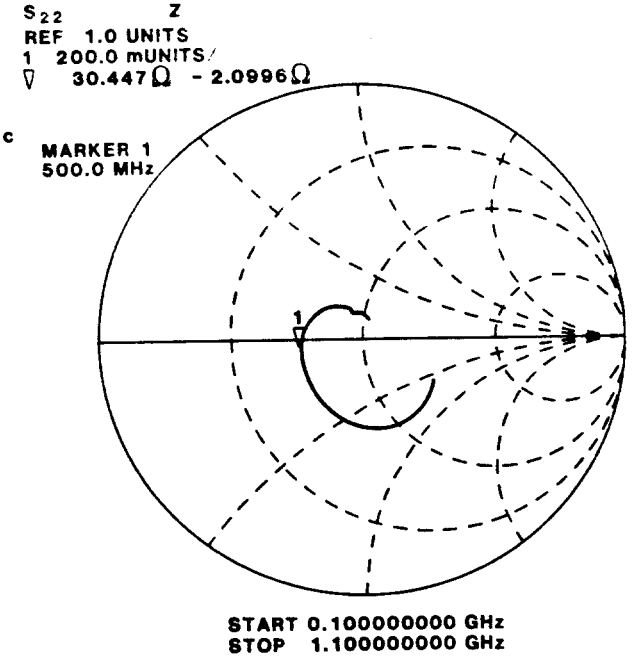

Figure 15. Output Impedance

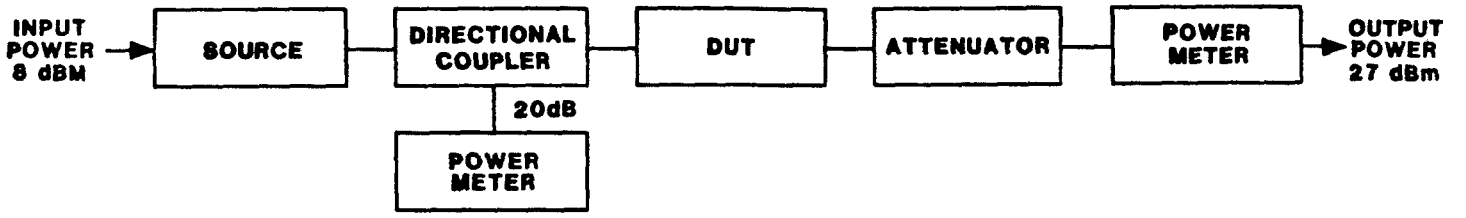

Figure 16. Power Measurement Setup

Table 7. Performance Comparison

	Desired	Measured
Frequency (MHz)	400 - 600	400 - 600
Gain (dB)	20	24.5
Output Power (dBm)	30	27
Input, Output Return Loss (dB)	<-10	-15.25

Summary

An amplifier that meets all requirements was designed and built. Test results are in good agreement with predictions from SUPER-COMPACT.

DISTRIBUTION:

2100	B. L. Gregory
2120	E. G. Franzak
2123	M. G. Armendariz
2123	D. Greenway, Jr.
2123	D. H. Loescher
2123	D. C. Martin
2123	M. L. Pyo (14)
2123	G. R. Schuster
2123	C. P. Stanton
2124	J. R. Guth
2126	J. E. Gover
2346	R. T. Knudson
2346	R. L. O'Nan
2346	R. D. Sanderlin
5217	M. L. Garcia
7252	D. W. Bushmire
7411	E. L. Lane
8024	P. W. Dean
3141	S. A. Landenberger (5)
3151	W. L. Garner (3)
3154-1	C. H. Dalin (28)
	For DOE/OSTI (Unlimited Release)