CONTRACTOR REPORT

SAND84—7130
Unlimited Release
UC—70

Nevada Nuclear Waste Storage Investigations Project

Spent-Fuel Consolidation System

G. A. Townes, W. L. Godfrey, K. J. Anderson
BE Inc.
PO Box 381
Barnwell, SC 29812

Prepared by Sandia National Laboratories Albuquerque, New Mexico 87185
and Livermore, California 94550 for the United States Department of Energy
under Contract DE-AC04-76DP00789

Printed September 1987

*TOTAL PAGES: 194
*In various paginations

"Prepared by Nevada Nuclear Waste Storage Investigations (NNWSI) Project participants as part of the Civilian Radioactive Waste Management Program (CRWM). The NNWSI Project is managed by the Waste Management Project Office (WMPO) of the U. S. Department of Energy, Nevada Operations Office (DOE/NV). NNWSI Project work is sponsored by the Office of Geologic Repositories (OGR) of the DOE Office of Civilian Radioactive Waste Management (OCRWM)."

Issued by Sandia National Laboratories, operated for the United States Department of Energy by Sandia Corporation.

NOTICE: This report was prepared as an account of work sponsored by an agency of the United States Government. Neither the United States Government nor any agency thereof, nor any of their employees, nor any of their contractors, subcontractors, or their employees, makes any warranty, express or implied, or assumes any legal liability or responsibility for the accuracy, completeness, or usefulness of any information, apparatus, product, or process disclosed, or represents that its use would not infringe privately owned rights. Reference herein to any specific commercial product, process, or service by trade name, trademark, manufacturer, or otherwise, does not necessarily constitute or imply its endorsement, recommendation, or favoring by the United States Government, any agency thereof or any of their contractors or subcontractors. The views and opinions expressed herein do not necessarily state or reflect those of the United States Government, any agency thereof or any of their contractors or subcontractors.

Printed in the United States of America
Available from
National Technical Information Service
U.S. Department of Commerce
5285 Port Royal Road
Springfield, VA 22161

NTIS price codes
Printed copy: A09
Microfiche copy: A01

Distribution
Category UC-70

SAND84-7130

Unlimited Release
Printed October 1987

NEVADA NUCLEAR WASTE STORAGE INVESTIGATIONS PROJECT: SPENT-FUEL CONSOLIDATION SYSTEM

by

G. A. Townes
W. L. Godfrey
K. J. Anderson

of

BE Inc.
P.O. Box 381
Barnwell, S.C. 29812

work performed for

GA Technologies, Inc.
Purchase Order Number 843468

for

Sandia National Laboratories
Albuquerque, New Mexico 87185
Sandia Contract: 52-9846

ABSTRACT

This document presents the results of a developmental study of equipment and operations for disassembling and packaging commercially generated light water reactor spent fuel. This fuel-consolidation study supports the conceptual design activities of the Nevada Nuclear Waste Storage Investigations project for the development of facilities at Yucca Mountain, Nevada, a candidate site for the disposal of radioactive waste. The study includes a review of current technology and existing equipment that potentially applies to a spent-fuel consolidation system. It generates a definition of the design bases for a consolidation system; provides recommendations for and descriptions of equipment and operations; and presents a design rationale, a staffing plan, and partial life-cycle cost estimates.

TABLE OF CONTENTS

	Page
Executive Summary	xiii
1.0 Introduction	
2.0 Fuel-Consolidation Process	3
3.0 Description and Costs of the Facility Design	11
3.1 Equipment Description	11
3.1.1 Consolidation System Frame	11
3.1.2 End-Fitting Removal Assembly	13
3.1.3 Multi-Collet Gripper Support Carriage	13
3.1.4 Multi-Collet Gripper for a 17 x 17 PWR Fuel Assembly Array	14
3.1.5 Rod Collector	15
3.1.6 Canister Loading Trough	16
3.1.7 Canister Holder	18
3.1.8 Material Handling and Waste Volume Reduction Equipment	19
3.2 Hot-Cell Layout	21
3.3 Operations and Maintenance Staffing	25
3.3.1 Crew Size	25
3.3.2 Potential for Throughput Capacity Increases	30
3.4 Utility Requirements	33
3.5 Maintenance Costs	36
3.5.1 Estimate Basis	36
3.5.2 Costs and Schedule	37
3.6 Equipment Development Costs	38
3.6.1 Estimate Basis	38
3.6.2 Costs and Schedule	39
3.7 Capital Equipment Costs	46
3.7.1 Consolidation Equipment	46
3.7.2 Nonconsolidation Equipment	49
3.8 Life-Cycle Costs	52
3.8.1 Development Costs	52
3.8.2 Capital Costs	52
3.8.3 Operating Costs	53

TABLE OF CONTENTS
(Continued)

	Page
3.8.3.1 Personnel	53
3.8.3.2 Consumables	53
3.8.3.3 Utilities	55
3.8.3.4 Maintenance	55
3.9 Off-Normal Conditions Study	55
References	59
List of Acronyms	60
Appendix A: Drawings	A-1
Appendix B: Operations Sequence Diagram	B-1
APPENDIX C: Design Bases	C-1
C-1.0 Fuel	C-2
C-2.0 Canister	C-2
C-3.0 Equipment Lifetime	C-3
C-4.0 Radiation Exposure	C-3
C-5.0 Capacity	C-4
C-6.0 Codes and Standards	C-4
C-7.0 Criticality	C-5
C-8.0 Seismicity	C-5
C-9.0 Contamination Control	C-5
C-10.0 Materials of Construction	C-5
C-11.0 Maintenance and Inspections	C-6
C-12.0 Waste Disposal	C-6
C-13.0 Temporary Fuel Shortage	C-6
C-14.0 Repository Onsite Transport	C-6
C-15.0 Decommissioning	C-7
C-16.0 Off-Normal Events	C-7
C-17.0 Summary	C-7
Appendix D: Design Rationale	D-1
D-1.0 Disassembly Process Orientation	D-2
D-2.0 Ancillary Process Orientations	D-4
D-3.0 Vertical Fuel Holding	D-6
D-4.0 End-Fitting Removal	D-8
D-5.0 Rod Removal	D-9
D-6.0 Rod Rearraying	D-12
D-7.0 Canister Loading	D-13
D-8.0 Waste Volume Reduction	D-14
D-9.0 Rework	D-16
D-10.0 Hot-Cell Operations	D-16
D-11.0 Safety	D-18

TABLE OF CONTENTS
(Continued)

		Page
D-12.0	Safeguards	D-18
D-13.0	Decommissioning	D-19
	References	D-20
Appendix E:	Consolidation Design Survey	E-1
Appendix F:	Reactor Fuel Designs	F-1
Reference		F-5
Appendix G:	Throughput	G-1
Appendix H:	Equipment Failure Mechanism	H-1
References		H-6
Appendix I:	Scope of Development Program	I-1
I-1.0	Task 1: Detail Design	I-2
I-2.0	Task 2: Procurement	I-3
I-3.0	Task 3: Demonstration Testing	I-3
Appendix J:	The Study of Off-Normal Conditions	J-1
J-1.0	Design Bases	J-2
J-2.0	Safety Impacts	J-6
J-3.0	Discussion of Off-Normal Conditions	J-7
J-3.1	Fuel Not Qualified for Consolidation	J-7
J-3.1.1	Definition	J-7
J-3.1.2	Recovery Procedure	J-8
J-3.1.3	Recovery Equipment	J-8
J-3.1.4	Throughput Impact	J-8
J-3.2	Canister Decontamination	J-8
J-3.2.1	Definition	J-8
J-3.2.2	Recovery Procedure	J-9
J-3.2.3	Recovery Equipment	J-9
J-3.2.4	Throughput Impact	J-9
J-3.3	Jammed Fuel Rods	J-9
J-3.3.1	Definition	J-9
J-3.3.2	Recovery Procedure	J-10
J-3.3.3	Recovery Equipment	J-11
J-3.3.4	Throughput Impact	J-11

TABLE OF CONTENTS
(Continued)

		Page
J-3.4	Broken Fuel Rods	J-12
	J-3.4.1 Definition	J-12
	J-3.4.2 Recovery Procedure	J-12
	J-3.4.3 Recovery Equipment	J-13
	J-3.4.4 Throughput Impact	J-13
J-3.5	Dropped Fuel Rods	J-13
	J-3.5.1 Definition	J-13
	J-3.5.2 Recovery Procedures	J-14
	J-3.5.3 Recovery Equipment	J-15
	J-3.5.4 Throughput Impact	J-15
J-3.6	Dropped Fuel Assembly	J-15
	J-3.6.1 Definition	J-15
	J-3.6.2 Recovery Procedure	J-15
	J-3.6.3 Recovery Equipment	J-16
	J-3.6.4 Throughput Impact	J-16
J-3.7	Fifteen-Minute Power Loss	J-16
	J-3.7.1 Definition	J-16
	J-3.7.2 Recovery Procedure	J-17
	J-3.7.3 Recovery Equipment	J-17
	J-3.7.4 Throughput Impact	J-17
J-3.8	Major Component Failure	J-17
	J-3.8.1 Definition	J-17
	J-3.8.2 Recovery Procedure	J-18
	J-3.8.3 Recovery Equipment	J-18
	J-3.8.4 Throughput Impact	J-18
J-3.9	Operator Error	J-18
	J-3.9.1 Definition	J-18
	J-3.9.2 Recovery Procedure	J-18
	J-3.9.3 Recovery Equipment	J-19
	J-3.9.4 Throughput Impact	J-19
J-3.10	Evacuation of Facility	J-19
	J-3.10.1 Definition	J-19
	J-3.10.2 Recovery Procedure	J-19
	J-3.10.3 Recovery Equipment	J-19
	J-3.10.4 Throughput Impact	J-20

TABLE OF CONTENTS
(Continued)

		Page
J-3.11	Rejected Canister Weld	J-20
	J-3.11.1 Definition	J-20
	J-3.11.2 Recovery Procedure	J-20
	J-3.11.3 Recovery Equipment	J-20
	J-3.11.4 Throughput Impact	J-20
J-3.12	Waste Container with Fuel	J-21
	J-3.12.1 Definition	J-21
	J-3.12.2 Recovery Procedure	J-21
	J-3.12.3 Recovery Equipment	J-21
	J-3.12.4 Throughput Impact	J-22
J-3.13	Extended Loss of Power	J-22
	J-3.13.1 Definition	J-22
	J-3.13.2 Recovery Procedure	J-22
	J-3.13.3 Recovery Equipment	J-23
	J-3.13.4 Throughput Impact	J-23
J-3.14	Loaded Canister Drop	J-23
	J-3.14.1 Definition	J-23
	J-3.14.2 Recovery Procedure	J-24
	J-3.14.3 Recovery Equipment	J-24
	J-3.14.4 Throughput Impact	J-24
J-3.15	Canister Rod Spill	J-25
	J-3.15.1 Definition	J-25
	J-3.15.2 Recovery Procedure	J-25
	J-3.15.3 Recovery Equipment	J-26
	J-3.15.4 Throughput Impact	J-26
J-3.16	Fire	J-26
	J-3.16.1 Definition	J-26
	J-3.16.2 Recovery Procedure	J-26
	J-3.16.3 Recovery Equipment	J-27
	J-3.16.4 Throughput Impact	J-27
J-3.17	Passing Canisters or Fuel Rods Between Process Cells	J-27

TABLE OF CONTENTS
(Concluded)

		Page
J-4.0	Recovery Equipment and Facilities	J-28
	J-4.1 Horizontal Pass-Through Modifications	J-28
	J-4.2 Single Fuel-Rod Grapple	J-33
	J-4.3 Broken Fuel-Rod Sorting Table	J-34
	J-4.4 Miscellaneous Remotely Operated Tools	J-35
	J-4.5 Rework Fissile Material Monitor	J-36
	J-4.6 Rework Canister Rotating Device	J-36
K-1.0	RIB/SEPDB	K-1

FIGURES

Figure	Title	Page
1	Consolidation of Spent-Fuel Rod Sets	4
2	Consolidation Sequence Diagram	5
3	Required Personnel for Processing PWR Spent Fuel	31
A-1	Consolidation Facility Pictorial	A-2
A-2	Consolidation System Frame Assembly	A-3
A-3	Rod Collector Assembly	A-5
A-4	Canister Loading Trough Assembly	A-6
A-5	End-Fitting Removal Assembly	A-7
A-6	Multi-Collet Gripper Support Carriage Assembly	A-8
A-7	PWR Multi-Collet Gripper Assembly (17 x 17)	A-9
A-8	Canister Holder Assembly	A-10
A-9	Waste Volume Reduction Equipment (VRE)	A-11
A-10	Consolidation Facility Plan and Elevation Views	A-12
A-11	Maintenance and Fuel Receiving Area Section Views	A-13
B-1	Operations Sequence Diagram	B-2
E-1	Fuel Consolidation State-of-the-Art Survey	E-3
J-1	Horizontal Transfer Cradle	J-30
J-2	Plan View of the Vertical Transfer Device	J-31
J-3	Elevation of the Vertical Transfer Device	J-32

TABLES

Table	Title	Page
1	Disassembly Work Stations	28
2	Disassembly Activities--Personnel per Operation by Half-Hour Daily Intervals	29
3	Nonproductive Time	30
4	Operations and Maintenance Staffing Requirements	32
5	Utility Requirements for the Consolidation Facility	34
6	Maintenance Replacement Costs and Scheduling	38
7	Labor Used for the AGNS Consolidation Development Program	41
8	Labor Estimated for the Consolidation Equipment Development Program	42
9	Development Program Labor Costs	43
10	Development Program Materials and Other Costs	44
11	Development Program Costs	44
12	Development Program Schedule	45
13	Capital Labor Correction Factors	47
14	Labor Costs for Capital Equipment	47
15	Capital Equipment Materials and Other Costs	48
16	Total Program Costs for Capital Equipment	49
17	Specific Capital Equipment for Nonconsolidation Operations	50
18	Direct Staffing Needs	53
19	Annual Quantity of Depletable Items	54
20	Amount of Consumables Required Annually and Their Estimated Cost	54
21	Identified Annual Utility Requirements	55
22	Recovery Equipment Cost and Schedule	58
C-1	Spent-Fuel Assembly Dimensions for the Design Basis	C-3
F-1	Estimated Inventory of Spent-Fuel Assemblies by 1990	F-3
F-2	Dimensions of Selected LWR Fuel Assemblies	F-4
G-1	Time Estimates for Individual Steps in Consolidation Operations	G-3
H-1	Gamma-Ray Intensity from 10-Yr-Old BWR Consolidated Fuel	H-4
H-2	Neutron Intensity from 10-Yr-Old BWR Consolidated Fuel	H-4
H-3	Gamma-Ray Intensity from 10-Yr-Old PWR Consolidated Fuel	H-5
H-4	Neutron Intensity from 10-Yr-Old PWR Consolidated Fuel	H-5

EXECUTIVE SUMMARY

This report presents the results of a study to develop a fuel-consolidation system for commercially generated light water reactor (LWR) spent fuel. The study supports the conceptual design activities of the Nevada Nuclear Waste Storage Investigations (NNWSI) project for the construction of a nuclear waste repository at the Yucca Mountain, Nevada, candidate site. The study focused on consolidation equipment for disassembling and packaging spent fuel and the layout, operations, costs, and staffing of the equipment. The design of the hot cells and auxiliary equipment was developed only as needed to be compatible with the consolidation equipment. Therefore, cost estimates exclude those costs for the hot cells, which will be defined later by the architect/engineer for surface facilities.

This report develops a conceptual design for consolidation equipment to be used in surface facilities for a repository in tuff. Subsequent to the initiation of this effort by the NNWSI Project, DOE/Idaho began work on a project aimed at developing a consolidation system suitable for use in a Monitored Retrievable Storage (MRS) facility or repository facility. This project, referred to as the Prototypical Consolidation Demonstration Project (PCDP), will develop and demonstrate production-scale dry consolidation equipment and is in the final design stage as of August 1987. The equipment developed by the PCDP will be the basis for future equipment that will be installed if consolidation is undertaken at a geologic repository or MRS, and future NNWSI Project design activities will incorporate appropriate PCDP information. Therefore, DOE does not anticipate further development of the consolidation equipment presented in this report.

The efforts of six foreign and domestic firms were reviewed to identify state-of-the art approaches and the technology to develop spent-fuel consolidation systems. All of the significant developmental work in the field is based on the use of either the hot-cell (dry processing) or storage-pool (wet processing) method of operations to ensure radiological protection. Typically, the hot-cell technique

represents operations oriented in a horizontal direction, whereas the processing configuration in the storage-pool method is oriented vertically. The hot-cell has been used where several types of spent fuel are processed, and the storage-pool has been used for processing a single type of fuel. In developing the current concept, evaluations identified optimum equipment and methods from both techniques which resulted in the following recommendations.

1. DIRECTIONAL ORIENTATION FOR PROCESSING OPERATIONS should be

   (a) horizontal for
      - canister loading and
      - trough loading, and

   (b) vertical for all other consolidation operations, including
      - fuel-assembly transfer from storage,
      - fuel-assembly holding,
      - end-fitting removal,
      - rod pulling,
      - shearing, compacting, and packaging of fuel-assembly frame components,
      - in-process storage, and
      - loading canisters onto transport vehicles and transferring them to the emplacement borehole.

2. DUPLICATE HOT CELLS, adjacent to each other for processing spent fuel, should be provided for the consolidation operations. A dry processing method should be used with equipment operated by remote-control devices to ensure radiological safety for personnel.

3. RADIATION EXPOSURE DOSES to maintenance personnel should be kept at the lowest levels possible by transferring radioactive spent fuel from a hot cell requiring a maintenance shutdown to a duplicate hot cell to prevent an interruption in the processing operations and also to ensure radiological safety for employees.

4. FUEL-ASSEMBLY HOLDING DEVICE should be a single adjustable mechanism that can accommodate multiple types of fuel assemblies with different cross-sectional dimensions and grid spacings.

5. END-FITTING REMOVAL should be carried out for the pressurized water reactor (PWR) assemblies by first severing their guide tubes with an internal cutting tool and for the boiling water reactor (BWR) assemblies by unscrewing the attachment nuts.

6. ROD REMOVAL should be achieved by grasping and pulling all rods simultaneously with collets (split sleeves used for gripping cylindrical objects).

7. TROUGH CONFIGURATION should be designed for longitudinal placement of the disassembled spent-fuel rods, in a trough whose contours and cross-sectional dimensions correspond to those of the pie-shaped canister sector.

8. WASTE-VOLUME REDUCTION should be achieved by shearing and compacting the nonfuel assembly components before loading the waste containers.

9. OFF-NORMAL OPERATIONS AND REWORK for handling broken or unreleased rods should be carried out in a separate hot-cell that has flexible, multifunctional equipment to prevent interruption of or interference with normal processing operations.

10. SAFEGUARDS against diversion or disappearance of special nuclear material should include the assay and documentation of radioactive-waste containers for nonfuel assembly components to ensure the protection and accountability of all spent fuel received.

The complexity of the operations requires that a system prototype be built and tested. A 30-mo development program appears to be an adequate amount of time in which to do this.

Based on processing 1,500 metric tons of uranium (MTU) annually* (5,116 fuel assemblies, Reference 1, p. 2-1), four operators per shift in the control room would be adequate for the consolidation operation. Scheduled and unscheduled maintenance needs would be met by a plant-wide maintenance group. Total manpower requirements are estimated at 10.7 man-yr annually. Throughput capacity can be doubled if processing is carried out on a continuous, rather than on a 2-shift basis, for 250 days annually (the base case).

Manpower, utility, and canister requirements are developed in detail and presented, but no cost estimates are provided for them. Other life-cycle costs (in 1984 dollars), for processing 1,500 MTU of spent fuel annually and limited to the consolidation system equipment only, have been estimated as follows:

Development	$ 5,974,000
Capital	7,703,000
Consumables	855,000
Maintenance replacements	428,000
Total	$14,960,000

*The report is based on a 1,500 MTU/yr throughput; subsequent to completion of the basic design, the repository throughput was increased to 3,000 MTU/yr. To accommodate a 3,000 MTU/yr throughput, two 1,500 MTU/yr fuel consolidation hot cells will be incorporated in the design.

1.0 INTRODUCTION

The work described in this report was performed for Sandia National Laboratories (SNL) and GA Technologies, Inc. as a part of the Nevada Nuclear Waste Storage Investigations (NNWSI) project. SNL is one of the principal organizations participating in the project, under the direction of the Waste Management Project Office of the U.S. Department of Energy's Nevada Operations Office (DOE/NVO). The project is a part of the Civilian Radioactive Waste Management Program, whose purpose is to develop the technology for the safe disposal of the growing quantities of radioactive waste accumulating at nuclear power plants.

DOE has determined that the safest and most feasible method currently known for disposing of nuclear waste is to emplace it in mined geologic repositories. In support of this decision, the NNWSI project has identified a candidate site for the disposal of commercially generated radioactive waste at Yucca Mountain, Nye County, Nevada.

Unreprocessed spent-fuel assemblies represent one of several types of commercially generated waste that will be handled at the nuclear waste repository. These assemblies consist of a number of spent-fuel rods, typically about 12 ft long and 1/2 in. or less in diameter, arranged in a square array with the rods spaced approximately 1/2 in. apart. One option that is being considered is to package and dispose of the fuel assemblies without dismantling them as discharged from the reactor. The alternative to this, the process of consolidation, involves disassembling the arrays, removing the individual fuel rods to form compacted sets, and packaging them in about half the volume that otherwise would be necessary. Consolidation has the potential to reduce the costs of waste disposal. However, to assess the extent of any potential cost savings resulting from consolidation, the development and construction costs for the facility would have to be included in the comparison analysis.

First-generation consolidation equipment and techniques have been developed and demonstrated at several sites (Reference 2). The objective

of this project was to identify and incorporate the best features of these first-generation techniques into a single system specifically adapted to the characteristics of the Yucca Mountain site. Development of equipment designs in sufficient detail to provide a basis for the design of the required hot cells and support structures and to generate preliminary estimates of life-cycle costs were also included in the objectives.

This report develops a conceptual design for consolidation equipment to be used in surface facilities for a repository in tuff. Subsequent to the initiation of this effort by the NNWSI Project, DOE/Idaho began work on a project aimed at developing a consolidation system suitable for use in a Monitored Retrievable Storage (MRS) facility or repository facility. This project, referred to as the Prototypical Consolidation Demonstration Project (PCDP), will develop and demonstrate production-scale dry consolidation equipment and is in the final design stage as of August 1987. The equipment developed by the PCDP will be the basis for future equipment that will be installed if consolidation is undertaken at a geologic repository or MRS, and future NNWSI Project design activities will incorporate appropriate PCDP information. Therefore, DOE does not anticipate further development of the consolidation equipment presented in this report.

2.0 FUEL-CONSOLIDATION PROCESS

Spent-fuel consolidation is a procedure in which spent LWR fuel assemblies are dismantled; and the disassembled fuel rods, arranged in compact sets, are packaged in canisters as shown in Figure 1. Remote-handling equipment disassembles the fuel rods within hot cells or protective enclosures to ensure safety from radiological contamination and exposure. Before Step 1 is performed, the fuel assemblies are moved from storage to the temporary storage rack in the hot cell (Figure 2). Cranes, modified for fuel handling, transfer the fuel assembly. The consolidation process and preparation of waste packages for emplacement (Figure 2) consist of the following operations:

1. loading the fuel-rod assembly into a holder;
2. removing the top end fitting of the fuel assembly;
2a. transferring the top end fitting to the shearing machine and compactor;
2b. transferring to and reworking spent fuel in a separate area with multifunctional equipment if end-fitting removal fails or when the transfer is otherwise necessary;
3. pulling the fuel rods from the assembly frame;
3a. transferring the remaining nonfuel components of the assembly frame to the shearing machine and compactor;
3b. transferring to and reworking spent fuel in a separate area with multifunctional processing equipment if rod removal fails or when the transfer is otherwise necessary;
4. collecting the fuel rods from multiple assemblies and placing them in the loading trough;
4a. shearing and compacting nonfuel components of the assembly frame;
5. loading each sector of the radioactive waste canister with sets of disassembled fuel rods;
5a. loading compacted nonfuel components of the assembly frame into the waste container;

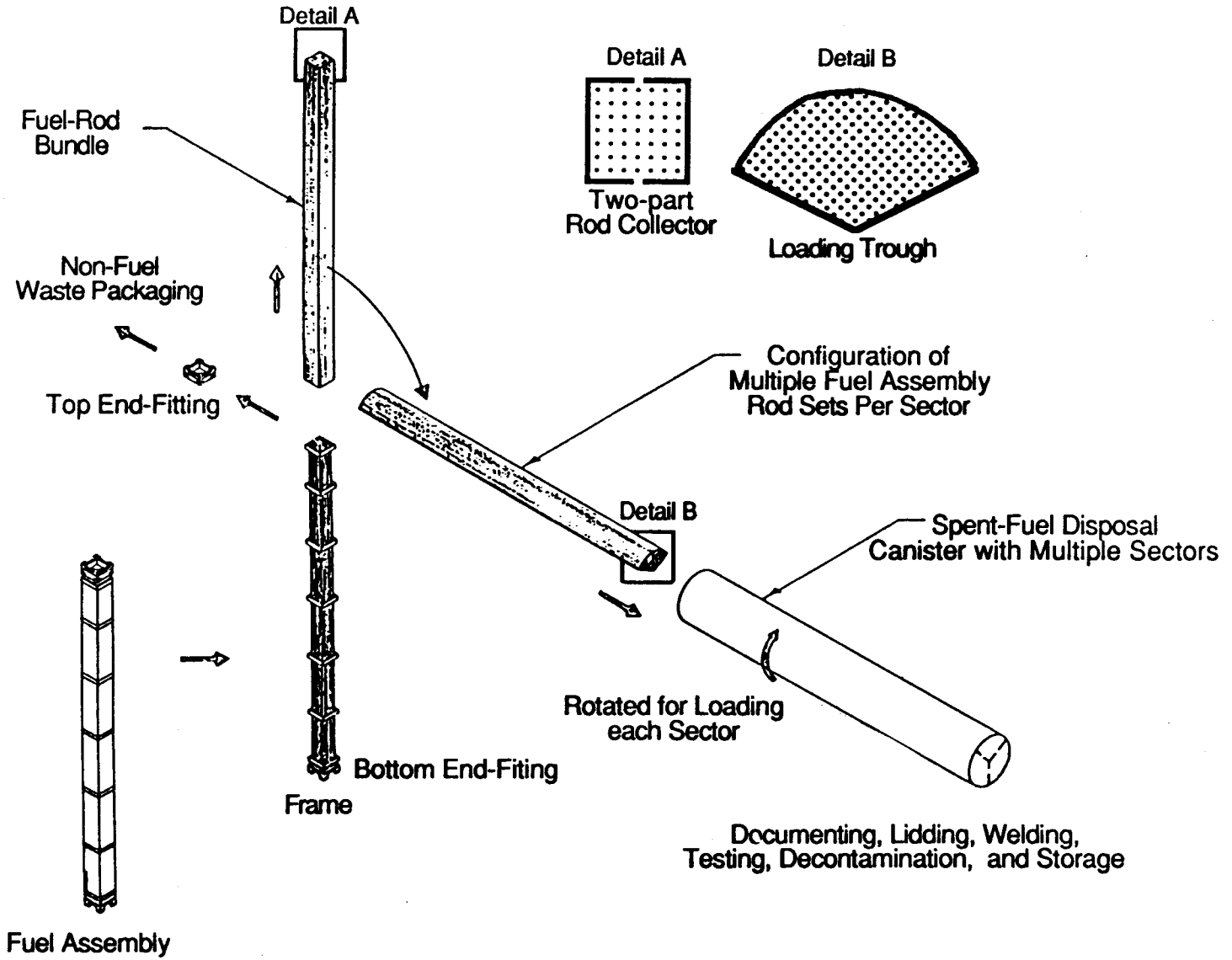

Figure 1. Consolidation of Spent-Fuel Rod Sets

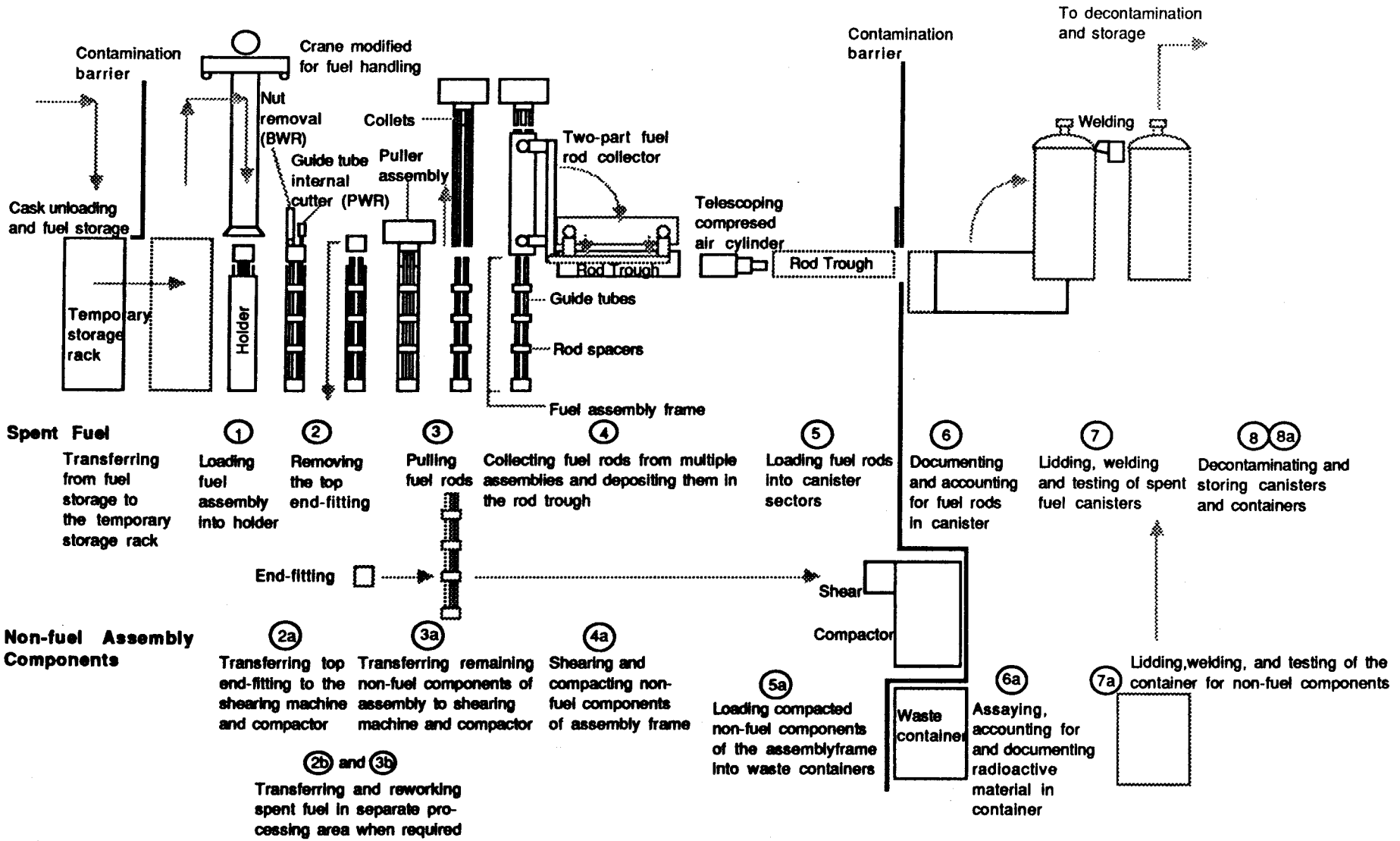

Figure 2. Consolidation Sequence Diagram

6. documenting and accounting for the fuel rods in the canister;

6a. assaying, documenting, and accounting for radioactive material in the container for nonfuel components;

7. lidding, welding, and sealing the canister for spent fuel;

7a. lidding, welding, and sealing the container for nonfuel components; and

8/8a. decontaminating exteriors of canisters and containers and transferring them to the pre-emplacement storage area.

A more detailed explanation of these steps is provided in the following paragraphs.

Step 1: The assembly is loaded in the fuel holder and clamped in a vertical position. Cranes modified for fuel handling are used to transfer the fuel assembly.

Step 2: An end-fitting removal device releases the top end fitting of the fuel assembly. The fuel handling crane removes the top end fitting, exposing the top portion of all the fuel rods. The end-fitting removal device is capable of cutting PWR guide tubes or unscrewing the mechanical connections of BWR fuel assemblies--operations that are required to disassemble and separate fuel rods from the fuel-assembly frames.

Step 2a: Top end-fitting hardware for the nonfuel components of the assembly frame is collected and transferred to the consolidation processing area for shearing, compacting, and packaging.

Step 2b: Fuel that requires special attention because of nonstandard conditions (e.g., unreleased top end fitting) is transferred to a separate processing area in a hot-cell enclosure with flexible multifunctional equipment to prevent interference with normal operations.

Step 3: A puller assembly, composed of fuel rod grippers, engages with each fuel rod by means of collets. All the rods are pulled simultaneously from the fuel-assembly frame. Inherently, the force exerted by the collets is limited because of their frictional gripping feature; consequently, they have a lower potential for damaging cladding than might be represented by other equipment. The maximum gripper force that can safely be exerted can be adequately controlled by design.

Step 3a: The remaining nonfuel components of the assembly frame (i.e., rod spacers, guide tubes, and the bottom end fitting) are collected and transferred to the shearing machine and compactor.

Step 3b: Fuel that requires special attention because nonstandard conditions occur (e.g., fuel rods are not released) is transferred to a separate processing area in a hot-cell with flexible multifunctional equipment so that this special handling does not interfere with normal operations.

Step 4: The pulled rods are encased in a two-part collector while they are held at the top and suspended from the puller assembly. Once enclosed within the collector, the rods are released from the puller assembly. The collector is rotated to a horizontal position and the fuel rods are laid in the rod trough.

Step 4a: The nonfuel components of the assembly frame are first sheared and then compacted to reduce the volume of this radioactive waste material.

Step 5: The trough is then aligned with the canister and the rod bundle loading device. The loading device, which includes a telescoping compressed-air cylinder, pushes the bundle of fuel

rods from the trough into the canister. These steps--fuel-assembly transfer, end-fitting removal, fuel-rod pulling, fuel-rod collection, and trough loading--are repeated until a sufficient number of fuel rods have been collected for filling a canister sector. The canister is rotated and aligned with the trough to load each sector. When filled, the canister is oriented vertically for lidding, and the trough returns to its original position to receive the next canister load.

Step 5a: The compacted nonfuel components of the assembly frame are also packaged in a nuclear waste container for subsequent disposal.

Step 6: Before lidding, the amount of spent fuel received at the repository is documented and verified. This documentation can be done by photographs of both the canister contents and the recorded measurement of its weight, as well as any unique canister-lid labeling. Fuel handled in the rework area is eventually returned and accounted for in a similar manner.

Step 6a: The contents of the nonfuel waste containers are assayed and documented to augment accountability procedures for spent fuel and to prevent its diversion or disappearance by means of the waste containers. Nonfuel components handled in the rework area are also eventually returned for loading into a container and are accounted for in a similar manner.

Step 7: After accounting for fuel rods, the canister is lidded, welded closed, and inspected. The weld signature is also photographed to permit future detection of any canister tampering and prevent diversion of special nuclear material.

Step 7a: Similarly, lidding operations are carried out for the nonfuel waste containers.

Step 8/8a: Decontaminating exteriors of canisters and containers and transferring them to a pre-emplacement storage area complete the processing.

To control radionuclide releases during the consolidation process, a contamination barrier separates the cask unloading and fuel storage area from that of the temporary storage rack used just before the consolidation operation. Likewise, a barrier separates the canister loading operations (Steps 5 and 5a) from those of assaying and documenting the contents of the canister or container (Steps 6 and 6a) and any subsequent lidding and welding activities.

Radioactive contaminants originate from three major sources:

- fuel rod CRUD* dislodged by the various handling and dismantling operations,
- particulates from cutting irradiated materials, and
- plenum fission-gas releases from fuel-cladding breakage.

Because these sources of contamination cannot be eliminated, safety measures to control radioactive releases and/or mitigate the consequences, if they occur, are included in the design.

Rework of items that require nonstandard processing is also a requirement. Possible off-normal conditions that would necessitate reworking procedures include

---

*CRUD is a term used widely in the nuclear industry to designate the deposits on fuel assemblies originating from corrosion products (prinicipally oxides of iron, chromium, and nickel) in the reactor's primary coolant system, which are transported by coolants and loosely deposited on the surface of reactor cores. Source: Decontamination of Nuclear Reactors and Equipment, J. A. Ayers, The Ronald Press Co., 1970, p. 55.

- fuel rods that are jammed or broken and cannot be removed from the assembly components by the normal operating procedure,
- handling and containment of broken fuel rods,
- fuel rods that have jammed during canister loading, and
- a rejected lid/canister weld.

Recovery under off-normal conditions typically requires some metal cutting operations (not the fuel cladding) and will be done in an off-line isolated enclosure. An alternative currently under consideration is overpacking the defective container rather than replacing or repairing it.

3.0 DESCRIPTION AND COSTS OF THE FACILITY DESIGN

Spent-fuel consolidation equipment and the consolidation hot-cell layout that are recommended as a result of this study are described in Sections 3.1 and 3.2 and illustrated in Appendix A. Consolidation facility staffing recommendations in Section 3.3 are based on the Operations Sequence Diagram in Appendix B. Cost estimates based on the design are included in this chapter. Supporting material can be found in the appendices for the sections that follow.

The first step in the design of the consolidation facility was the development of design bases as described in Appendix C. The application of these design bases to and the rationales for the recommendations as selected from various equipment and facility alternatives are presented in Appendix D. The options considered in the design selection process, representative of state-of-the-art technology and other applicable advanced concepts, are explained in Appendix E.

3.1 Equipment Description

Principal consolidation equipment for which design recommendations were made include the system frame, end-fitting removal assembly, rod-gripper assembly, rod collector, canister loading trough, and canister holder; they are described below.

3.1.1 Consolidation System Frame

The conceptual design of the frame used to support equipment for consolidating fuel assemblies is shown on Figure A-1 as Item 1 and on Figure A-2. The lower 14 ft of the frame will hold the fuel assembly during consolidation operations. The fuel holder, which secures the fuel-rod spacers during removal of the fuel rods, is shown on Figure A-1 as Item 2 and on Figure A-2 (Sheet 1) as part of the frame. Details of this device are shown on Sheet 2 of Figure A-2. Through the use of movable plates that run the length of a fuel assembly, a range of

dimensions for assembly cross sections (4 to 9 inch square) can be accommodated. (Data on various spent-fuel assembly designs and dimensions are provided in Appendix F.) Not shown on the drawing is a series of detent pins that protrude from the movable plates; these will secure the fuel-rod spacers during fuel-rod removal. The pins can be arranged so that they will positively hold each fuel-rod spacer regardless of spacer locations that vary with different fuel designs. Similarly, the bottom end-fitting will be positively held by the pins. The effective use of detent pins has been demonstrated.*

The rod collector will be a two-part rectangular container that opens at the top and pivots about two metal bars. The pivot line will be located approximately 18 ft above the frame base (Figure A-3). The rod collector, positioned vertically, will receive the fuel rods as they are released from the collets. The collector then will be rotated 90° to a horizontal position. Once in the horizontal position, compressed air cylinders will open the two sections of the collector and will deposit the fuel rods in the canister loading trough (Figure A-4).

The consolidation system frame will be fabricated in two sections so that it can be installed or removed from the cell by remote-handling equipment. At the lower end of the frame, there will be an opening that allows air to flow downward over the fuel during fuel-rod removal. This frame is designed for collecting and confining most of the fuel-rod CRUD and any other radioactive particulates dislodged during rod pulling. The frame will be constructed predominantly of stainless steel. In general, the structure will be of welded construction except for the joint between the lower and upper portions of the frame. This joint will be secured by captive bolts. This frame will be about 34 ft high, 6 ft long, and 4 ft wide, and will weigh approximately 8,000 lb.

---

*Allied-General Nuclear Services, Barnwell, S. C., performed dry fuel-consolidation tests during the years 1979 to 1982. The use of detent pins to secure grid spacers during fuel-rod removal was demonstrated.

3.1.2 End-Fitting Removal Assembly

The end-fitting removal assembly is shown on Figure A-1 as Item 3 and Figure A-5. Figure A-5 shows part of the lower portion of the consolidation frame, which is shown in its entirety on Figure A-2. To process PWR assemblies, a special internal device will cut the control rod guide tubes (thimbles) just below the top end fitting. For BWR assemblies special tools will unbolt the tie-rod nuts to remove the top end fitting. After the top end fitting is removed for BWRs, the tie rods will be unscrewed from the bottom end fitting. The top end fittings will then be placed in a waste collection container by an overhead manipulator. Nonfuel bearing wastes, such as the top end fittings, will subsequently be reduced in volume by special equipment.

Through the use of stepping motors and low friction slides (bearings), the end-fitting removal tools, which are mounted on a motor spindle, can be accurately moved in the X, Y, and Z directions shown on Figure A-5 (a maximum of 18 in., 12 in., and 12 in., respectively). Both the smallest BWR and the largest PWR fuel assemblies may be accommodated within the working envelope of the equipment.

The end-fitting removal assembly will consist of a support frame and the items necessary to orient the special tools discussed above. The assembly will be constructed of stainless steel and the frame will be welded. The stepping motors and the motor spindle will be replaceable by remote-handling equipment.

The removal equipment will require a special area as shown in the plan view, of approximately 3 x 7 ft. The weight of the end-fitting removal assembly, excluding the frame or special tools, is about 400 lb.

3.1.3 Multi-Collet Gripper Support Carriage

The multi-collet gripper support carriage is shown on Figure A-6. The carriage supports the puller assembly or multi-collet gripper

(Figure A-7) and moves it between two positions (14 in. total travel). In its standby position, the carriage will be located about midway on the vertical axis of the consolidation system frame (Figure A-2) and will be slightly off center to prevent interference with the loading of assemblies into the fuel holder. After a fuel assembly has been lowered into the frame (and the top end fitting is removed), the support carriage will be moved to its working position directly over the top end of the fuel assembly.

After the fuel rods are engaged, the support carriage is raised (and subsequently lowered) by the cable drum drive (Figure A-2) for removal of the rods. The carriage will move up and down the frame on rollers that will ride on tracks on the upper portion of the frame. There will be auxiliary cables on each drum, and it is possible to design for additional cables if desired.

The support carriage will consist of the carriage, two open ball bushings that move on separate shafts, a lead screw driven by a gear motor, and the necessary framework to support it. The support carriage for the multi-collet gripper is approximately 2 ft wide, 3 ft long, and 2 ft high (Figure A-6). This carriage is constructed of stainless steel, except for some readily available items such as the gearmotor that will be constructed of standard materials. The gearmotor and the support carriage weighing about 400 lb will be replaceable by remote-handling equipment.

3.1.4 Multi-Collet Gripper for a 17 x 17 PWR Fuel Assembly Array

The multi-collet gripper or puller assembly shown on Figure A-7 is designed for a 17 x 17 PWR fuel assembly, the largest expected to be processed. There will be a separate gripper for each type of (or dimensionally different) fuel assembly. The gripper is an assembly of collets, or split sleeves, that grasp the top of the rods tightly and subsequently pull them out simultaneously. Thus the fuel rods will be separated from the remaining frame of the fuel assembly.

The collets are split so that each fuel rod will be gripped at four equidistant points on its circumference. The collets will be actuated by tapered metal rods (collet-actuating pins) that push on the lower lip of the collets and force them to close. The fuel rod is grasped with a frictional force applied equally at all points. This technique, rather than some positive attachment devices such as mechanical jaws, ensures that the collet will slip and that the fuel-rod cladding will not be ruptured if an overstress condition develops during rod pulling (e.g., when a rod becomes jammed or is gripped too tightly by the fuel-rod spacers).

To ensure that the outermost fuel rods in the arrays are also gripped in four places, dummy fuel-rod segments are required around the edge of the gripper assembly for the collet-actuating pins to react against (see note on Figure A-7).

Compressed air cylinders will drive the collet-actuating pins and the mechanisms that release jammed fuel rods. Although the potential is low, if any fuel rods become lodged in the collets after unclamping, a recovery method is provided for this possibility.

The four cylinders that control the collet-actuating pins are designed so that air pressure is required to release the pins. This safety feature ensures that in the event of power loss the collets will remain clamped to the fuel rods and they will not drop.

Each gripper will be fabricated predominantly from stainless steel. The PWR gripper for a 17 x 17 array (Figure A-7) roughly requires the space of 1 ft^3 and is expected to weigh about 250 lb. Some of the other grippers, particularly the BWRs, will be slightly smaller and lighter.

3.1.5 Rod Collector

The rod collector (Figure A-3) will be composed of two metal half sections that when driven together form a container closed at the bottom

and open at the top. This device will allow the pulled fuel rods to be positioned between the half containers when open. After the two parts of the container are driven together by air cylinders, the rods are released and held by the container thus formed.

To ensure that all fuel rods are released safely from the collets without excessive drop distances, the formed container will be only as high as the length of the shortest fuel rod expected to be consolidated (about 10 ft long). Once the rod collector is filled with fuel rods, it will be rotated 90° from a vertical position to a horizontal position directly over the canister loading trough (Figure A-4). The rotation will be achieved by a through-the-wall drive shaft. The collector will be counterbalanced to facilitate rotation.

Once positioned over the canister loading trough, the two-part container portion of the collector will be opened by air cylinder power and the fuel rods released. This operation will be repeated until the canister trough is filled with the rods of two PWR or six BWR fuel assemblies.

Except for some minor components (e.g., the air cylinder parts), the rod collector, slightly over 16 ft long, will be constructed of stainless steel. Detailed dimensions are shown on Figure A-3.

3.1.6 Canister Loading Trough

The canister loading trough is shown on Figure A-1 as Item 4 and on Figure A-4. This equipment will receive and collect the fuel rods removed from either PWR or BWR fuel assemblies, in a wedge-shaped trough like that of the canister section. It is assumed that the canister will be segmented into three equal sectors (120° each), although any equal division of the canister can be accommodated by appropriate trough design.

The loading trough will be filled with the rods from either two PWR or six BWR fuel assemblies. The filled trough will then be closed by a

plate moved over the top of the trough opening by two lever arms. The entire trough assembly will be moved horizontally on rollers (by air cylinder power) about 5.5 ft to a position in front of a telescoping air cylinder.

The loaded trough will be rotated counter-clockwise 150° so that it forms a flattened "V" configuration for holding the rods (see end view of Figure A-4) directly in line with, and between the telescoping air cylinder and an empty consolidated fuel canister section. The fuel rods will be pushed into the fuel canister sector by power from the air cylinder. Electric vibrators attached to the trough are included in the detail design to facilitate insertion of the fuel rods into the canister sector. The canister is rotated to receive each sector load of fuel rods when the empty sector is at the top of the circular arc of the circumference. The weight of previously loaded rods creates stress on the metal dividing plates between the sectors, slightly bending them and reducing the size of the void area below. Therefore, rod loading in this uppermost position eliminates the potential problem created by the weight of the rods already loaded.

The trough will have a hinge (Figure A-4) that permits it to open when it has rotated to the canister loading position (the "V" configuration). The hinged opening will allow access to the fuel rods during off-normal events, for example, if fuel rods are jammed during loading of a canister.

The dimensions of the canister loading trough assembly (excluding the rails and mounting supports) will be about 15 ft long, 5 ft wide, and 4 ft high. Because the trough assembly moves on rails, it requires a cell about 11 ft wide. The trough will be constructed of stainless steel, except for such items as air cylinder components and some minor hardware. The weight of the assembly, including rails, is estimated at about 3,500 lb (excluding mounting support).

3.1.7 Canister Holder

The canister holder, shown on Figure A-1 as Item 5 and Figure A-8, will consist of a canister support cradle and a cradle bed. This equipment will

- hold a fuel canister in a horizontal position during loading,
- orient a canister sector so that it mates with the canister loading trough (Figure A-4),
- rotate the canister so that each sector may be filled, and
- allow the canister to be placed in an upright position by subsequent lid placement and welding.

The canister will be held inside an open-framed support cradle with crane trunnions for lifting. The open frame will allow rollers in the cradle bed to rotate the canister. A 6-ton crane, using clamps similar to those that lift flat metal plates, will load an empty canister into the cradle. The cradle will subsequently be lifted, placed on the cradle bed, and rotated during final positioning to a horizontal position.

The canister/cradle/bed apparatus will be pushed toward the loading port by air cylinder power that will move the combined equipment on rails. Once the canister is connected to the loading port, a lever (activated by an air cylinder) extends slightly into the open end of the canister. The canister is rotated slowly by a gearmotor until one of the internal partitions that form the canister sector comes into contact with the extended lever. The rotation will stop automatically; another lever will then extend out on the other side of the internal partition. Thus, as one of the partitions is secured in place by the two levers, the empty canister sector will be positioned in a flattened "V" configuration at the top of the circular arc of the circumference. In this position, the canister is ready to be loaded. After loading the first sector of the canister, the levers are retracted. The above operations are repeated for loading the remaining sectors. The loading port is equipped with a

device that provides airflow around the fuel rods during canister loading to assist in the collection of any fuel-rod CRUD dislodged during insertion of the rod bundle into the canister.

Air cylinder power moves the canister/cradle/bed apparatus away from the loading port, and the crane moves into position. The cradle (still supporting a filled canister without a lid) is lifted from the cradle bed and positioned vertically at the weld station to await lid placement and welding. The next empty canister in another support cradle is then positioned on the cradle bed for loading. Two cradles are required for efficient operation.

The overall dimensions of the canister holder are approximately 15 ft long, 4 ft wide, and 4 ft high. It is constructed predominately of stainless steel. The canister holder weighs about 5,000 lb, including a cradle and empty canister but excluding fuel rods and equipment mounting supports.

3.1.8 Material Handling and Waste Volume Reduction Equipment

Cranes, capable of being indexed in three-dimensional space, have been chosen for handling fuel-rod canisters, waste containers, and fuel assemblies. There are several reasons for this decision. First, these indexable cranes will be used primarily for operations but will also back up the maintenance cranes. Likewise, the maintenance cranes will be used primarily for maintenance functions, but they will also provide operational back-up. Upgrading commercially available cranes to include indexing and load-stabilization capabilities represents a practical method of applying various technological developments whose capabilities are already demonstrated to fill facility needs. At the same time, applying these technological developments will provide a cost-effective way to duplicate capability for contingencies. Second, any equipment other than cranes to handle packages and fuel assemblies will require a development effort that would increase costs. Also, there appears to be no requirement from an operations standpoint for using totally automated

equipment. Last, totally automated equipment, which is the alternative to using cranes, generally requires more maintenance. Therefore, the use of cranes should ensure a more cost effective and efficient operation.

The equipment necessary to reduce the volume of the fuel assembly frame (Figure 1) is shown on Figure A-1 as Item 6 and Figure A-9. The components (nonfuel) of the fuel assembly frame that remain after all the fuel rods have been removed from the fuel assembly include the bottom end-fitting, guide tubes, and fuel-rod spacers. Volume reduction equipment will shear and compact the components of the frame. Shearing and compacting techniques to reduce volume are well established in the nuclear industry.

The frame will be lowered into the feed chute by an in-cell overhead crane. A blade, driven by an air cylinder with a working stroke several feet long, will shear the guide tubes and the spacer grids. The bottom end fitting itself will not be sheared but will be severed from the guide tubes just above their point of attachment to the end fitting. The shear blade will cut the guide tubes during the first part of the air cylinder stroke while the latter part of the stroke will transfer the cut portion into the compaction chamber.

The cutting will continue until the compaction chamber is sufficiently filled with material for efficient compaction. A ram driven by an air cylinder will compact the waste by pressing it against a metal plate. After compaction, the ram will be retracted and the first metal plate will be moved aside by another air cylinder. The compacted waste will drop onto a lower metal plate that is also moveable, after which the first metal plate will be moved aside and closed. The two moveable metal plates will form a partial air lock between fuel disassembly and canister-handling areas. This air lock will reduce the spread of radiological material into the canister-handling areas, which is expected to remain relatively free from contamination. When the lower metal plate is moved aside, the compacted waste will drop into a waste container below the compaction opening. The process will continue until the waste container is filled.

The majority of the shear/compactor components will be made of stainless steel. The unit will be about 35 ft high (to accommodate the total length of a fuel assembly frame and a waste container below it), about 10 ft long, and 4 ft wide. The weight of the equipment is estimated at about 6,000 lb.

3.2 Hot-Cell Layout

The conceptual design of the consolidation facility is shown on Figures A-1, A-10, and A-11. The maximum (interior) dimensions of the hot cells for the consolidation operations will be approximately 104 ft long, 32 ft wide, and 44 ft high.

Because no repository has been built yet, the consolidation facility conceptual design layout will not be constrained by predetermined dimensions or specific interfaces. Dimensionally, the only constraint will be to minimize the overall size and thus reduce the cost of hot-cell construction. This conceptual design defines equipment envelopes and the overall volume of the hot cell necessary to confine radioactive contaminants resulting from the consolidation process. In the detail design, the volume of the cell could further be reduced by using pits for selected pieces of equipment.

As shown on Figure A-10, spent fuel enters the consolidation facility either through Cell 4 or Cell 5. It is assumed that the in-process fuel storage area will be adjacent to the consolidation facility. To enter either Cell 4 or 5, the appropriate cover block is removed. It is assumed that only one cover block will be removed at any one time because each cell will feed a separate process line, and only one process line will normally operate at any one time. Contamination will be controlled by ventilation barriers between Cells 4 or 5 and their connecting processing cells, 1A and 1B, respectively. A small fuel storage rack will be moved beneath the opening in the cell, and fuel will be lowered into the cell by one of the fuel storage cranes. The fuel rack will be designed to hold 1 day's throughput or 20 assemblies. The

thickness of the walls between (1) the in-process fuel storage area and either Cell 4 or 5 and (2) the walls between Cell 4 or 5 and the process area (Cells 1A and 1B) will be determined by structural load requirements because they are not required to provide shielding.

After fuel is placed in the cell's temporary fuel storage rack, the cover block will be returned and the rack moved on floor rails inside the process cell. Process areas, Cells 1A and 1B, will be mirror images of each other. In reality they constitute a single cell because they will open into each other at their adjacent ends, but for discussion they will be referred to as two cells. The same thing applies to Cell 2, which will be divided into Cells 2A and 2B and will be identical, mirror-image processing areas.

Cells 1A and 1B will be divided by a shielding wall that allows remote-handled equipment to perform maintenance in one cell while fuel is being consolidated in the other. For example, if equipment failure causes the process line in Cell 1A to be shut down, fuel in the cell can be removed (to the extent practical) to Cell 1B and consolidation can continue. In the meantime, remotely controlled maintenance on Cell 1A equipment could proceed with lower exposure dose rates to personnel. Two shielding walls, at least 20 ft apart, separate maintenance workers from the highly radioactive fuel. The cells connect with each other (above the in-cell fuel storage racks) for flexibility of operation and to ensure that cells such as Cell 3 (for incoming equipment) or Cell 6 (for rework and maintenance) are accessible and will not need to be constructed in duplicate.

Cells 1A and 2A (and their counterparts 1B and 2B) will be divided by a shielding wall that will also provide a partial contamination barrier between the cells. Cells 1A and 1B are expected to be moderately contaminated. The challenge will be to institute procedures and good housekeeping practices that will keep Cells 2A and 2B virtually free from contamination. Consolidated fuel canisters and waste containers should not, therefore, normally require decontamination of their outer

surfaces. Nonetheless, back-up decontamination will be provided by Cells 8 and 10.

The wall between Cells 1A and 2A (and 1B/2B) provides structural support for the partial in-cell shielding wall and overhead ceiling. The thickness of this wall in the final design will be based on structural considerations.

Cells 1A, 1B, 2A, and 2B will be serviced by four 6-ton and two 10-ton overhead cranes. The 6-ton cranes will load fuel into the fuel holder and will be equipped for three-dimensional indexing. The 6-ton cranes will also have a load-stabilizing control system that will minimize load sway. Each 10-ton crane will serve two cells by straddling the center shielding/structural wall. Without a load and with its hook fully raised, a 10-ton crane will pass over either of the 6-ton cranes. The 10-ton crane will carry its load from Cell 1A to Cell 1B by going around the end of the central wall. This crane will also provide service for the support cells at each end of the consolidation process cells.

Cells 1A and 1B will each have an overhead manipulator that will lift and position tools to help perform recovery operations resulting from off-normal events and to assist with maintenance tasks.

The conceptual design of the layout presented (Figures A-1, A-10, and A-11) provides for maintenance on the cranes either by in-cell remote control or by transfer of the cranes to a shielded maintenance area adjacent to the consolidation processing cells. Minor maintenance is performed with through-the-wall or overhead manipulators. Normally, this maintenance is performed while the line is not operating. Maintenance under these conditions, with the central shielding wall blocking radiation from the hot processing line, could be designed to reduce dose rates to less than 1 rem/yr for maintenance personnel (Reference 2).

Major maintenance of the crane requires that the crane be removed from the process cells. This task will be manageable because of the size

and weight of these relatively narrow 6- and 10-ton cranes. As an alternative, the upper portion of the contamination barrier shown in the conceptual drawing as a separation between Cells 1 and 2 could be designed to be portable. This capability will permit cranes to be transferred from Cells 1A/1B to Cells 2A/2B en route to a crane maintenance room that could be located at either end of the consolidation cells. The final location for such a room will depend upon coordinating the remainder of the facility design with the architect/engineer for surface facilities.

Cell 3 will be used to introduce equipment into process Cells 1A and 1B. Cells 4 and 5, as already mentioned, are for moving fuel into the process cells.

Cell 6 will be the rework and maintenance cell. If a fuel or waste canister lid seal is rejected and is not repairable in the lidding area, the canister will be sent back to this cell for rework. The rework area will also handle partially loaded and jammed fuel canisters or fuel rods lodged in the fuel assembly frame. Off-normal removal of fuel rods is performed in a horizontal direction rather than the usual vertical direction in the rework cell. The rework cell has the necessary assortment of multifunctional tools and working conditions to minimize fuel-rod breakage during recovery from off-normal events. The working conditions are not constrained by the need to maintain annual throughput rates as would be the case if recovery were carried out in the normal processing area.

Cell 7 will be used to introduce clean fuel canisters, waste containers, equipment, and lids into process Cells 2A and 2B. Access is through a cover block by means of overhead cranes.

Cells 8 and 10 will be used to take radiation smear samples and to decontaminate consolidated fuel canisters and waste containers, as required. The shielded cover blocks of these cells are opened by out-of-cell motors that move them horizontally. Fuel or waste is lowered into

Cells 8 or 10 by overhead cranes. The cover blocks are returned after transfers. Smear samples are taken of the canisters and the exteriors are decontaminated, if required. The fuel canisters are removed from the cells and temporarily placed in an in-process fuel storage area. The waste containers are sent to Cell 9 by cell pass-through devices between Cells 8/10 and Cell 9.

In Cell 9, the waste containers will be assayed to confirm that fuel is not being removed. After the assay is completed, the waste containers normally will be sent to in-process storage. Though improbable, if assay of the waste container indicates that fuel is indeed inside the waste container, it will be sent to rework (Cell 6) to be opened and inspected.

The number of cell windows will be minimal because operators will conduct most of the operations from a central control room using closed-circuit television monitors. This will be standard procedure to ensure compliance with the ALARA (as low as reasonably achievable) principle for minimal radiation exposure to personnel. It is possible that windows will be used routinely to inspect and photograph canister welds in Cells 2A and 2B. However, other windows at each major work station will not be used routinely but will facilitate maintenance of equipment.

3.3 Operations and Maintenance Staffing

3.3.1 Crew Size

The constraints placed on staffing are discussed in Appendix C-5.0 (Capacity), and include

- a production rate of 5,116 fuel assemblies/yr,
- 250 operating days/yr,
- a 2-shift/day operation, and
- 6 productive hr/shift.

These criteria will require a facility capable of handling about 20 fuel assemblies/day. Because of the nature of the rod pulling operation, it makes no difference which assemblies (BWR or PWR) are being handled; however, the number of rods and the size of the fuel assembly frame is significantly greater for PWR assemblies. (A detailed discussion of throughput is provided in Appendix G.) Because the design criteria have insufficient detail to support a statistical analysis of the available fuel feed and because crew sizes are not normally changed on a daily basis, estimates of the required staff for handling PWR fuel assemblies will be conservative. This approach ensures all possible fuel mixes can be accommodated.

The design is based on an assumption of 250 working days/yr. For staffing studies, estimates are determined on a 5-day/wk, 50-wk basis, leaving 2 wk for contingencies such as major maintenance activities (i.e., a crane change-out). Because normal operations will only require one process line, major maintenance on any of the auxiliary or duplicate equipment can be carried out without impeding normal operations.

It is assumed that a crew of 10 men will be required for the scheduled 2-wk downtime for annual maintenance. In order to maintain and repair equipment on the idle line while the other line operates normally, it is assumed that 5 people will be required for 1 wk, three times a year.

Routine preventive maintenance such as lubrication, instrument calibrations, and cable inspections will be scheduled during the off-shift. Similarly, replacement of equipment to prevent failure will be performed during the off-shift without affecting normal operations. It is anticipated that these craft skills will be available from a plant-wide maintenance group. The sum of the projected maintenance times (all skills) is expected to be about 32 hr/wk or about 20% of the labor requirements for operations as developed below.

The sequence of activities at each work station is depicted in detail in the Operations Sequence Diagram (Figure B-1) of Appendix B for PWR fuel consolidation operations performed on a 2-shift/day basis.

At the start of the day, one-half hour is allocated for "A" shift personnel to change clothes and report to their work stations. Three activities are undertaken immediately: (1) the transfer of a day's supply of fuel to the work area for subsequent consolidation, (2) completion of testing and decontamination procedures for the fuel canister, and (3) completion of testing and decontamination of the waste container loaded during the previous day.

The consolidation sequence begins when fuel is on hand. After two assemblies of PWR fuel are loaded into the fuel rod canister, the canister is rotated to a new sector. When filled with six assemblies, the fuel canister is sealed, tested, and decontaminated, as required. Because the facility is designed to handle approximately 20 assemblies a day, the canister sequence is repeated just over 3 times during the 2 shifts. The last canister will be held over to complete its testing and decontamination the following day before being placed in in-process storage. The number of fuel assemblies to be processed each day will not correspond to an integral number of canisters because the sequence of activities (shown on Figure B-1) is begun each day to accommodate the partially completed cycle from the previous day.

As illustrated in Table 1, the area is divided into eight work stations that will carry out a function or series of functions without affecting the activities at other stations.

With the exception of the fuel lidding and nondestructive testing and labeling stations where a witness will be required, only one individual will be needed at a work station. The activities for the 2-shift operation are evaluated at half-hour intervals, and the results are shown in Table 2 and summarized in Figure 3.

A four-man operating crew, with one of them as lead operator, will be adequate. An allowance has been made for nonproductive time as shown in Table 3.

TABLE 1

DISASSEMBLY WORK STATIONS

Station	Activity
Feed Storage	• Transfer daily spent-fuel allocations from interim storage to the in-cell day rack.
Rod Pulling	• Load fuel into fuel holder. • Remove end fittings. • Pull rods. • Load rods into fuel-rod collector. • Rotate collector to unload. • Remove fuel assembly frame.
Fuel Canistering	• Position canister loading trough. • Load canister. • Reposition canister loading trough.
Canister Lidding	• Rotate canister. • Move canister to lidding area. • Position new canister. • Photograph and record canister for accounting. • Place lid on canister. • Seal weld lid on canister.
Nondestructive Testing and Labeling	• Weigh filled canister. • Photograph weld deposit. • Inspect and/or test canister weld. • Label canister as required.
Decontamination	• Smear-test canister. • Decontaminate canister, as required, and retest it.
Nonfuel Waste	• Move end fittings to shear. • Shear and compact metallic wastes. • Load wastes into container.
Waste Packaging	• Move container to lidding area. • Position new container. • Place lid. • Seal lid. • Decontaminate. • Neutron interrogation. • Document.

TABLE 2

DISASSEMBLY ACTIVITIES--PERSONNEL PER OPERATION BY HALF-HOUR DAILY INTERVALS

	Work Station							
	Rod Pulling	Canistering	Lidding	Waste Packaging	Nondestructive Testing	Decontaminating	Storing	Number of Men Required
Men at Station	1	1	1	1	2	1	1	
8:00								
8:30				x	x	x	x	4
9:00	x			x		x	x	4
9:30	x		x	x		x		4
10:00	x	x		x				3
10:30	x							1
11:00	x			x				2
11:30	x	x		x				3
12:00	x			x				2
12:30	x							1
1:00	x	x	x	x				4
1:30	x			x	x			3
2:00	x	x		x	x			4
2:30	x				x	x		3
3:00	x			x		x		3
3:30	x	x		x		x		4
4:00	x			x				2
4:30	x							1
5:00	x	x	x	x				4
5:30	x		x	x	x			4
6:00	x	x		x	x			4
6:30	x				x	x		3
7:00	x			x		x		3
7:30	x	x		x		x		4
8:00	x			x				2
8:30	x			x				2
9:00	x	x	x	x	x			5
9:30	x			x	x	x		4
10:00	x	x		x		x		4
10:30								

TABLE 3

NONPRODUCTIVE TIME

Time (minutes)	Activity
30	Dress-out
15	Morning break
30	Lunch
15	Afternoon break
30	Shower and change

As shown in Figure 3, the full staff will not be required on a continual basis; thus, rest and lunch breaks can be taken at times that will not affect operations. It is anticipated that the shifts will overlap during change of clothing.

A production supervisor will coordinate operations. In addition, a shift supervisor, planner/scheduler, and quality assurance/accountability clerk will be required part-time. No health physics (HP) services will be required for either the operations crew or the daily maintenance personnel; however, the manpower estimate for the maintenance crew required during the annual outage includes HP services.

Table 4 summarizes the annual operations and maintenance staffing requirements. In order to determine the required staff, the nonmaintenance numbers are multiplied by two to account for the two shifts.

3.3.2 Potential for Throughput Capacity Increases

The potential for an increase in the capacity of the processing throughput using the facilities as designed will be significant and will occur in three areas.

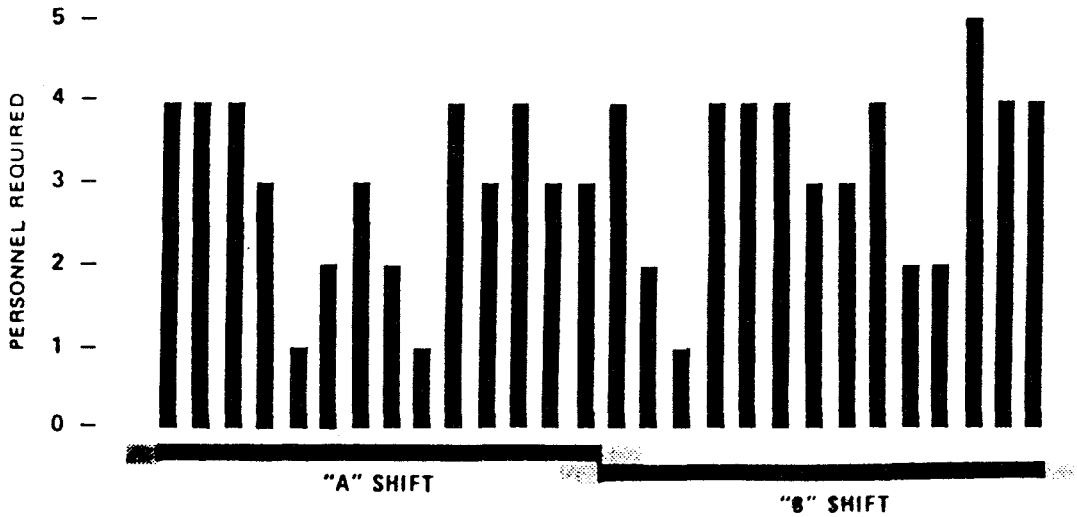

HALF-HOUR INTERVALS OF AVERAGE DAILY PRODUCTIVE OPERATING TIME

(14 hours per day total)

Figure 3. Required Personnel for Processing PWR Spent Fuel

TABLE 4

OPERATIONS AND MAINTENANCE STAFFING REQUIREMENTS

	Crew Size (men)	Required Fraction	Staffing Requirement
Shift Supervisor	1	0.2	0.2
Planner/Scheduler	1	0.2	0.2
QA*/Accountability Clerk	1	0.2	0.2
Operators (including supervision)	4	1.0	4.0
Operating Staff Total			4.6
Maintenance--Daily Preventive	1	0.8	0.8
Maintenance--Annual Outage	10	0.04	0.4
Maintenance--Equipment	5	0.06	0.3
Maintenance Staff Total			1.5

Total Manpower Requirement [(4.6 x 2) + 1.5 man-yr/yr] = 10.7

*Quality Assurance

- The facility design places the operating staff in an environment where contamination is not expected to be a problem and traditional protective clothing will not be required. If the personnel use street clothes, the daily productive operating time could be increased from 14 to 15 hr; this represents an increase in operating time of 7%.

- The design is based on a 2-shift operation. The nominal 50% increase associated with 3-shift operation could be made available by rescheduling maintenance on weekends. Operation time could be increased another 40% by adopting a 4-shift, 7-day/wk work schedule; this is possible by reassigning maintenance to the auxiliary mirror-image hot cell.

- Finally, the facility is designed with two complete operating lines, each of which is fully capable of sustaining the normal

rate of fuel consolidation processing. If increases in throughput are desired, both lines can be operated without doubling the work force. The data in Table 2 show that an average of 3.1 operators/shift (some of whom will verify the contents of the canister for accountability) are required. It appears that six operators will be sufficient to run both lines. However, because processing on one of the lines would then have to be shutdown for maintenance, it is incorrect to assume that continuous processing would occur on both lines and the throughput rate would be twice that for employees using street clothes and working 4-shifts, 7 days/wk.

3.4 Utility Requirements

Table 5 lists the utility requirements for the consolidation facility as identified during this conceptual design stage. In most cases actual utility data for similar equipment were obtained or extrapolated from that for equipment installed at the Barnwell Nuclear Fuel Plant (Reference 3). When insufficient utility data have been available, estimates have been based on prior engineering experience. The utilization factor was based on engineering experience and estimates are believed to represent a conservative assessment.

The consolidation operation itself does not require other utilities. However, radioactive materials confinement, decay-heat removal, and decontamination and decommissioning requirements should result in the need for hot-cell ventilation, through-the-wall piping for decontamination fluids, and hot-cell drainage. Standards established by the architect/engineer for surface facilities will be appropriate. Inadvertent introduction of neutron moderating material into the fuel-handling cells should be precluded.

TABLE 5

UTILITY REQUIREMENTS FOR THE CONSOLIDATION FACILITY

Quantity	Description	Cell	Normal Electrical[a] Power (W)	Annual Utilization Factor (%)	Normal Power Consumption (kWh/yr)	Compressed[b] Utility Air (100 psi[c])
-[e]	Lights	3	600	90	4,700	
-	Suited entry	3	3,000	0.2	50	50 cfm[f]
-	TV camera	3	1,000	10	880	
-	Lights	4	300	90	2,400	
1	TV camera	4	1,000	5	440	
-	Lights	5	300	90	2,400	
1	TV camera	5	1,000	5	440	
-	Lights	6	900	90	7,100	
1	TV camera	6	1,000	10	880	
1	6-ton bridge crane	6	9,800	3	2,600	
1	Grinder	6	750	1	70	
1	Saw	6	370	1	30	
2	Remote hand tools	6	750	1	70	50 cfm
2	Through-wall manipulators	6	1,000	5	440	
2	Air cylinders	6				TBD
-	Lights	1A	3,600	98	31,000	
2	Criticality and radiation monitors	1A	500	100	4,400	
3	TV cameras	1A	3,000	90	23,700	
1	6-ton bridge crane	1A	9,800	6	5,200	
1	Overhead manipulator	1A	5,500	6	2,900	
1	Floor mounted manipulator	1A	1,500	3	390	
1	Fuel rack drive	1A				1 cfm
1	X-Y-Z removal equipment	1A	750	10	660	
1	Rod removal frame and hoist	1A	750	10	660	
1	Collet gripper assembly	1A				TBD
1	Rod collector assembly	1A	750	10	660	TBD
1	Canister loading trough assembly	1A	1,500	1	130	TBD
1	Waste shear	1A	100	8	70	TBD
1	Waste compactor	1A	100	8	70	TBD
4	Electrical spares	1A	6,000	2	1,050	
1	Transfer port fines collection	1A				
-	Lights	1B	3,600	98	30,900	
2	Criticality and radiation monitors	1B	500	100	4,400	
3	TV camera	1B	3,000	90	23,700	
1	10-ton bridge crane	1B	10,600	5	4,640	
1	6-ton bridge crane	1B	9,800	6	5,200	
1	Overhead manipulator	1B	5,500	6	2,900	
1	Fuel rack drive	1B				1 cfm
1	Floor mounted manipulator	1B	1,500	3	390	
1	X-Y-Z removal equipment	1B	750	10	660	
1	Rod removal frame and hoist	1B	750	10	660	
1	Collet gripper assembly	1B				TBD
1	Rod collector assembly	1B	750	10	660	TBD
1	Canister loading trough assembly	1B	1,500	1	130	TBD
1	Waste shear	1B	100	8	70	TBD
1	Waste compactor	1B	100	8	70	TBD
4	Electrical spares	1B	6,000	2	1,050	

TABLE 5

UTILITY REQUIREMENTS FOR THE CONSOLIDATION FACILITY
(Concluded)

Quantity	Description	Cell	Normal Electrical[a] Power (W)	Annual Utilization Factor (%)	Normal Power Consumption (kWh/yr)	Compressed[b] Utility Air (100 psi[c])	Equipment Offgas
–	Lights	2A	3,100	98	26,600		
2	TV cameras	2A	2,000	90	15,800		
2	Criticality and radiation monitors	2A	500	100	4,400		
1	Canister rotation device	2A	750	10	660		
3	Canister positioning cylinders	2A				1 cfm[d]	
1	Canister lid welder	2A	75,000	2	13,150		400 cfm
1	Waste lid sealer	2A	1,000	3	260		
1	6-ton bridge crane	2A	9,800	6	5,200		
1	Overhead power manipulator	2A	5,500	4	1,930		
–	Lights	2B	3,100	98	26,600		
2	TV camera	2B	2,000	90	15,800		
2	Criticality and radiation monitors	2B	500	100	4,400		
1	Canister rotation device	2B	750	10	660		
3	Canister positioning cylinders	2B				1 cfm	
1	Canister lid welder	2B	75,000	2	13,150		400 cfm
1	Waste lid sealer	2B	1,000	3	260		
1	6-ton bridge crane	2B	9,800	6	5,200		
1	Overhead power manipulator	2B	5,500	4	1,930		
1	10-ton bridge crane	2B	10,600	5	4,640		
1	TV camera	7	1,000	10	880		
–	Lights	7	400	90	3,160		
–	Lights	8	300	98	2,580		
1	TV camera	8	1,000	10	880		
1	Canister handling motor	8	750	2	130		
2	Criticality and radiation monitors	8	500	100	4,400		
–	Lights	9	300	98	2,580		
1	TV camera	9	1,000	10	880		
1	Assay equipment	9	2,000	6	1,050		
2	Criticality and radiation monitors	9	500	100	4,400		
–	Lights	10	400	98	3,440		
1	TV camera	10	1,000	10	880		
1	Canister handling motor	10	750	2	130		
2	Criticality and radiation monitors	10	500	100	4,400		
	TOTALS (Rounded)				340,000	100 cfm @ 100 psi TBD[e] cfm @ 500 psi	1,600 cfm

a. Estimated at full load.
b. A 500 psi compressed air system consisting of an air compressor, pump, valves, hoses, fittings, etc., is required outside the consolidation hot cells to supply identified air cylinders.
c. Pounds per square inch.
d. Cubic feet per minute.
e. To be determined (in final design).

3.5 Maintenance Costs

3.5.1 Estimate Basis

Maintenance of consolidation equipment and its associated costs have been reviewed. It has been concluded that components of consolidation equipment requiring multiannual maintenance (as a result of radiation degradation) will be replaced at the midpoint of the facility design life, at an estimated cost of $28,000. A $400,000 allowance is provided to cover contingencies or random failures of this equipment during the lifetime of the facility. Other costs, for limited items requiring replacement at intervals of several months or less, are covered as consumables under Section 3.8.3. Estimates of daily or monthly preventive maintenance supplies and costs have been deferred to the architect/engineer.

Capital costs for maintenance equipment are not anticipated because the operating equipment can provide the maintenance envisioned for this facility by remote handling. The duplicate processing lines discussed in earlier sections permit hot-cell operating cranes and manipulators to double as maintenance units when the idle process line equipment is undergoing maintenance. The cranes and manipulators replace failed equipment by remote handling. Therefore, no additional capital equipment is required for maintenance in the processing cells.

Expected failures and their causes that occur several times a year for consolidation equipment have been reviewed to determine maintenance costs. Causes of failure in a hot cell could include corrosion, creep, fracture, fatigue, wear, and radiation degradation. Appendix H provides details of the rationale for assuming that all causes except radiation degradation are improbable. It also discusses the degree of radiation degradation that can be expected.

The equipment components degraded by radiation in the canister loading cells include the in-cell electric motor insulation, electric limit switch insulation, pneumatic cylinder seals, and associated power/control flexible cables. The degradation of electric motor

insulation affects the components of the cranes, overhead manipulators, the canister holder, and the remote-controlled welder. Degradation of the electrical limit switch insulation, which could involve most of the equipment, can be minimized or eliminated by using pneumatic limit switches (i.e., air bleeds monitored by differential pressure instruments) to determine when switch actuating positions are reached. For this study, use of pneumatic limit switches has been assumed, except for cranes and overhead manipulators. Pneumatic cylinder seals are also found on all equipment except the cranes and overhead manipulators.

Experience with hot-cell equipment also indicates that electrical insulation in such applications can exceed the hundred million rads of absorbed dose that is the damage threshold discussed in Appendix H, if the insulation is not moved or flexed. Nonetheless, the conservative replacement of electrical motors in the canister loading cell is included in the cost estimates for maintenance.

3.5.2 Costs and Schedule

Table 6 summarizes the replacement costs and maintenance schedule. It indicates that a complete replacement is advisable at the midpoint of the life of the facility (Appendix H) and should be made at this time to minimize the potential for failure and problems. The costs include procurement and modification of replacement components, as required, and are exclusive of labor, which is covered in staffing discussions. The costs will be $28,000 (in 1984 dollars).

An allowance of $400,000 is also provided, as shown in Table 6, to cover random failure of consolidation equipment during the lifetime of the facility. The allowance is approximately 10% of procurement costs for the consolidation capital equipment. This covers those failures that are not subject to limited-life design considerations but are the result of original procurement flaws or design inadequacies not detected by quality assurance controls.

TABLE 6

MAINTENANCE REPLACEMENT COSTS AND SCHEDULING
(Estimates are given in 1984 dollars)

Years to Replacement	Equipment	Cost ($)[a]
16	6-ton crane motors (3)[b]/limit switches	$ 4,000
	Power manipulator motors (9)/limit switches	7,000
	Canister holder rotation and remote welder motors (3)/limit switches	4,000
	Canister holder cylinders (2)	2,000
	Remote welder cylinder (1)	1,000
	Flexible jumpers (10)	10,000
	Subtotal	28,000
	Nonspecific random failures over the design life of the facility	400,000
	Total	$428,000

a. Exclusive of labor costs that are covered in staffing.
b. Quantity estimate (typical).

3.6 Equipment Development Costs

3.6.1 Estimate Basis

To prepare meaningful cost estimates, it has been necessary to define the scope of a development program for spent-fuel consolidation prototypical equipment (see Appendix I). Two objectives are met by the development program chosen as a basis for estimates. The first is to provide hardware for performing the necessary operations. The second is to demonstrate the capability of the equipment to perform the intended operations reliably.

The development program was divided into tasks--that is, detail, design, procurement, and demonstration activities. The total cost of such a development program is estimated at $5,824,000, and it is expected to require 30 mo to complete.

DOE's program monitoring costs and the cost of the remote-handling maintenance equipment necessary for the demonstration facility are excluded from this estimate.

The consolidation system equipment items that should be included in the development program are listed below. The costs and schedule estimates in Section 3.6.2 are based on the following items:

- fuel holder,
- end-fitting removal system,
- rod-puller collets,
- puller-assembly hoist and frame,
- fuel-rod canister loading trough,
- canister holder,
- fuel-rod collector,
- volume reduction shear and compactor,
- fuel/canister grapples,
- canister lid-welder/nondestructive tester, and
- test facility and modifications.

3.6.2 Costs and Schedule

The cost and schedule estimates for the consolidation equipment development program are based on industrial consolidation development experience from Allied-General Nuclear Services (AGNS), whose program paralleled that defined in Tasks 1, 2, and 3 in Appendix I. However, compared with the AGNS program, additional items have been included in this consolidation equipment development program, and appropriate corrections have been made.

The materials cost estimates are based on the conceptual design of the equipment items for the consolidation system listed at the end of Section 3.6.1 and on information from the AGNS experience for estimating labor costs. Material costs and loaded labor rates that represent research and development activities in the southwestern United States have been chosen and are clearly stated. These costs and labor rates allow a dollar amount to be estimated but also permit later standardization when overall program cost estimating is implemented.

Labor used for the AGNS consolidation development program is listed in Table 7. The labor is divided into the skills used for each AGNS development program task. The time required for each skill is broken down into man-hours and a percentage for each task to calculate composite labor rates in the future (Table 9).

Labor estimates for the equipment development program are shown in Table 8. These estimates for the equipment items included in the AGNS scope are combined to determine total labor requirements.

The calculated labor costs of the equipment development program are shown in Table 9. Components of the composite labor rates for each task are developed by multiplying the labor skill percentages of Table 7 by the hourly rates assumed for research and development activities in the southwestern United States. Loaded composite labor rates are estimated by summing the components on a task-by-task basis. The loaded labor costs listed are the product of the task man-hours from Table 8 and the composite labor rates.

Development program material and other direct costs are shown in Table 10. Loaded costs are provided. Development program procurements not otherwise included are also shown, such as simulated fuel assemblies, waste canisters, test facility modification material, a commercial welder/tester modified for remote-handling use (representing an allowance rather than an estimate because the concept is not yet fully developed), a control system, and a test facility lease.

TABLE 7

LABOR USED FOR THE AGNS[a] CONSOLIDATION DEVELOPMENT PROGRAM[b]

Skills	Task 1 Detail Design (%)	Task 1 Detail Design (man-hours)	Task 2 Procurement (%)	Task 2 Procurement (man-hours)	Task 3 Demonstration (%)	Task 3 Demonstration (man-hours)
Engineering/Drafting	61	8,000[c]	11	1,200[c]	30	2,300[c]
Analysis	29	3,800[d]	--[e]	--	--	--
Manufacturing	--	--	79	8,300[f]	27	2,100[f]
Technicians	--	--	--	--	33	2,500
Quality Control	3	400	3	300	3	250
Project Management	7	900	7	700	7	550
	100	13,100	100	10,500	100	7,700

a. Allied-General Nuclear Services.
b. AGNS labor experience is detailed and parallels the development program for equipment Items 1-6, Section 3.6.1.
c. The man-hours listed are 7/12 of the total AGNS man-hour expended on this task.
d. Man-hours are estimated at one-third of the AGNS number for total engineering to cover preliminary licensing analysis not in the AGNS scope.
e. Not Applicable.
f. Man-hours are a 4:1 allocation to the consolidation equipment development program task definitions described in this report of a total of AGNS man-hours that were not so divided.

TABLE 8

LABOR ESTIMATED FOR THE CONSOLIDATION EQUIPMENT DEVELOPMENT PROGRAM

Equipment Items (See Section 3.6.1)	Task 1 Detail Design (man-hours)	Task 2 Procurement (man-hours)	Task 3 Demonstration (man-hours)
1-6	13,100	10,500	7,700
7-9[a]	6,550	5,250	3,850
10[b]	6,550	5,250	3,850
11[a]	2,220	1,750	1,280
	28,400	22,750	16,680

a. Each equipment item is assumed to equal the average item labor requirements (i.e., $\frac{13,100}{6}$ per item) of the AGNS consolidation system demonstration.

b. Canister-lid welding and nondestructive testing labor requirements are assumed to equal half of the labor requirements experienced by AGNS consolidation system demonstration.

The equipment development program costs are shown in Table 11. This table consolidates information from Tables 9 and 10 by tasks and lists the total.

The development program schedule is presented in Table 12. It is assumed that licensing issue resolutions will delay the start of Task 2 until Task 1 is completed. A maximum of 6 mo might be saved by risking additional procurement costs that could result from changes required by licensing issue resolutions; this would result in a 24-mo-long program. Costs for such contingencies, if elected, are estimated at approximately 20%.

TABLE 9

DEVELOPMENT PROGRAM LABOR COSTS
(Estimates are given in 1984 dollars)

Skill	Task 1 Detail Design	Task 2 Procurement	Task 3 Demonstration
Engineering/Drafting	0.61[a] x 56[b] = 34.16	0.11 x 56 = 6.16	0.30 x 56 = 16.80
Analysis	0.29 x 59 = 17.11	--[c]	--
Manufacturing	--	0.79 x 44 = 34.76	0.27 x 44 = 11.88
Technicians	--	--	0.33 x 52 = 17.16
Quality Control	0.03 x 49 = 1.47	0.03 x 49 = 1.47	0.03 x 49 = 1.47
Project Management	0.07/1.00 x 79 = 5.53	0.07/1.00 x 79 = 5.53	0.07/1.00 x 79 = 5.53
Loaded Composite Labor Rates	58.27	47.92	52.84
Costs	28,400 hr x $58.27/hr = $1,655,000	22,750 hr x $47.92/hr = $1,090,000	16,680 hr x $52.84/hr = $881,000

a. Labor skill percentages are taken from Table 7 and expressed as a decimal (typical).
b. Hourly labor rates have been assumed in dollars for research and development activities in the southwestern United States (typical).
c. Not applicable.

TABLE 10

DEVELOPMENT PROGRAM MATERIALS AND OTHER COSTS
(Estimates are given in 1984 dollars)

Cost Item	Task 1 Detail Design	Task 2 Procurement	Task 3 Demonstration
Materials	--[a]	723,630[b]	--
Travel[c]	82,740	54,510	44,070
Services	82,740[c]	328,000[d]	100,000[e]
Supplies[c]	------	54,510	44,070
Subtotal	165,480	1,160,650	188,140
Material Overhead Factor	x 1.1	x 1.1	x 1.1
G & A Factor[f]	x 1.2	x 1.2	x 1.2
Fee Factor	x 1.1	x 1.1	x 1.1
Material Costs Totals	$240,000	$1,685,000	$273,000

a. Not applicable.
b. Includes $300,000 for 24 dummy fuel assemblies and 2 waste canisters, $100,000 for the test facility modification material, $250,000 for a welder/tester package unit, and $73,630 for fabrication materials.
c. At 5% of labor costs.
d. Cold side control system is based on AGNS control system cost escalated to 1984 and extrapolated to conceptual design scope.
e. Test facility lease for 12 mo.
f. General and administrative costs.

TABLE 11

DEVELOPMENT PROGRAM COSTS
(Estimates are given in 1984 dollars)

Components	Task 1 Detail Design		Task 2 Procurement		Task 3 Demonstration		Subtotals	
Labor*	1,655,000		1,090,000		881,000		3,626,000	
Materials*	240,000		1,685,000		273,000		2,198,000	
Subtotals	1,895,000	+	2,775,000	+	1,154,000	=	5,824,000	Total

*Labor totals have been taken from Table 9, and material totals have been taken from Table 10.

TABLE 12

DEVELOPMENT PROGRAM SCHEDULE

Task 1--Design

Task 2--Procurement

Task 3--Demonstration
(Test Facility Lease)

0 1 2 3 4 5 6 7 8 9 10 11 12 13 14 15 16 17 18 19 20 21 22 23 24 25 26 27 28 20 30
Months

3.7 Capital Equipment Costs

3.7.1 Consolidation Equipment

Specific consolidation capital costs for equipment are estimated at $7,398,000. These costs have been calculated using the same approach used to estimate equipment development costs (Section 3.6) with appropriate corrections for differences in the two programs. Equipment items not specifically related to consolidation are discussed in Section 3.7.2.

The specific consolidation capital equipment program (CEP) has three major differences from the prototype equipment development program. The CEP has no need for the test facility modification activities as required by the development program, and allowances for this item have been deleted. Also, the CEP checkout testing associated with the processing equipment is abbreviated relative to the demonstration testing of the development program with regard to labor and materials. Finally, the CEP has to provide two process lines of equipment and the control system for these lines. The development program has provided only one process line of equipment and its control system.

There are several other minor considerations in the CEP that have been generally omitted from the development program as nonessential. First, it is necessary to provide remote maintenance details in the CEP that have been omitted from the development program. Second, quality assurance and quality control must be increased for the capital equipment to ensure meeting licensing requirements. Third, specifications for equipment that has been omitted from the development program and is compatible with the radiation environment are required. Fourth and final, support tooling, such as multiple grapples and fuel-rod pulling devices to process a full range of fuel designs, must be provided.

Four tables provide details of the capital cost estimates for these specific consolidation equipment. Table 13 presents the labor correction factors used to modify development program labor costs to those that are anticipated for the CEP.

TABLE 13

CAPITAL LABOR CORRECTION FACTORS[a]
(Estimates are given in 1984 dollars)

Scope Differences Capital Equipment vs. Development Program	Task 1 Detail Design	Task 2 Procurement	Task 3 Checkout Testing
Basic Capital Program[b]	92	92	30[c]
Second Line Equipment	20	80	25
Remote Maintenance Details	10	10	10
Increased QA/QC[d] Requirements	5	5	5
Radiation Hardening	5	10	0
Support Tooling	5	10	5
	137%	207%	75%

a. These correction factors will be applied to development program labor costs (Table 9) to generate capital equipment labor costs (see Table 14).
b. The test facility modification component of the development program has been deleted from the capital equipment program.
c. In addition, a two-thirds reduction has been made to reflect checkout testing requirements of capital equipment rather than development program demonstrations.
d. Quality Assurance/Quality Control.

Table 14 lists the results of applying these factors to the development program labor costs.

TABLE 14

LABOR COSTS* FOR CAPITAL EQUIPMENT
(Estimates are given in 1984 dollars)

	Task 1 Detail Design	Task 2 Procurement	Task 3 Checkout Testing
Loaded Labor Costs	$2,267,000	$2,257,000	$661,000

*Costs have been generated as the product of labor correction factors (Table 13) x labor costs totals (Table 9).

Table 15 presents costs of materials, services, travel, and supplies for the CEP.

TABLE 15

CAPITAL EQUIPMENT MATERIALS AND OTHER COSTS
(Estimates are given in 1984 dollars)

Components	Task 1 Detail Design	Task 2 Procurement	Task 3 Demonstration
Materials	--[a]	513,500[b]	--
Travel[c]	113,360	112,830	33,050
Services	113,360[c]	492,000[d]	--
Supplies[c]	--	112,830	33,050
Subtotal	226,720	1,231,160	66,100
Material Overhead Factor	x 1.1	x 1.1	x 1.1
G & A Factor[e]	x 1.2	x 1.2	x 1.2
Fee Factor	x 1.1	x 1.1	x 1.1
Material Costs Totals	$329,000	$1,788,000	$96,000

a. Not applicable.
b. Cost includes $100,000 for six simulated fuel assemblies and two waste canisters, $250,000 for a welder/tester package unit, and $163,500 for material required to fabricate equipment for two process lines.
c. Estimates are 5% of labor costs.
d. The amount is for a control system and is based on AGNS control-system cost estimates escalated to 1984 dollars and extrapolated to conceptual-design scope, including a 50% allowance for the equipment to control the second process line.
e. General and administrative costs.

Table 16 presents a breakdown summary of the CEP total cost of $7,398,000.

TABLE 16

TOTAL PROGRAM COSTS FOR CAPITAL EQUIPMENT
(Estimates are given in 1984 dollars)

	Task 1 Detail Design	Task 2 Procurement	Task 3 Checkout Testing
Labor[a]	$2,267,000	$2,257,000	$661,000
Material[b]	329,000	1,788,000	96,000
Subtotals	$2,596,000	$4,045,000	$757,000

Total: $7,398,000

a. Labor totals have been taken from Table 14.
b. Material totals have been taken from Table 15.

3.7.2 Nonconsolidation Equipment

Table 17 identifies specific capital equipment for nonconsolidation items within the consolidation cells that are to be costed by the architect/engineer. In general, these are equipment items identified as necessary for consolidation but not specifically part of the consolidation processing lines. Furthermore, krypton (Kr) recovery has not been deemed necessary, as discussed below.

Currently, reprocessing operations, which handle fuel discharged from reactors after December 1982, must recover Kr. The intent of the initial operations of a reprocessing facility is to open the cladding of the fuel rod to the extent that the fuel can be dissolved. This operation releases the noble gases not only in the plenum of the fuel rod but also those diffused in the fuel matrix. Recovery requirements are based on release limits that are a percentage of the Kr present as calculated from burnup.

It is likely that during the disassembly operation, some fuel cladding flaws will become breaks, allowing the plenum gases to escape into the cell. Similarly, Kr, which diffuses from the fuel matrix,

TABLE 17

SPECIFIC CAPITAL EQUIPMENT FOR NONCONSOLIDATION OPERATIONS

Equipment Item	Cell	Function	Quantity	Remarks
Viewing Windows	--	Allow visual access to cells during maintenance to nonroutinely observe operations.	TBD	
CCTVs	--	Allow remote control room operation of consolidation process.	TBD	Conceptual design made allowances for 18 CCTVs excluding crane cameras.
Scales	2A-2B	Weigh loaded fuel canister.	2	
Camera	2A-2B	Photograph lid welds for safeguards verification.	2	
Inspection Equipment	--	Inspect canister welds.	2	Probably ultrasonic equipment.
Criticality Alarms	1A-1B 2A-2B 8,9,10	Alert personnel in case of a criticality event.	TBD	
Radiation Monitors	All	Measure levels of radiation in the cells.	TBD	
10-Ton Bridge Crane	--	Lift loads and assist operations or maintenance.	TBD	Conceptual design identified the need for two 10-ton bridge cranes.
6-Ton Bridge Crane	--	Lift routine loads and assist operations or maintenance.	TBD	Conceptual design identified the need for five 6-ton bridge cranes.
Overhead Manipulator	1A-1B 2A-2B	Lift and position tools, provide maintenance, and recover from off-normal events.	TBD	Conceptual design identified the need for four overhead manipulators.
Floor Mounted Manipulator	1A-1B	Assist with removing nonfuel bearing components from rod removal frame.	2	
Decontamination Equipment	8,10	Remove any surface contamination from loaded fuel/waste containers; clean equipment or inner cell surfaces.	TBD	
Cell Lighting	All	Provide lights for viewing operations and maintenance.	TBD	Conceptual design estimated about 143,000 kWh/yr for cell lights.
Grinder	6	Grind off metal from canisters being reworked.	1	
Saw	6	Saw metal being reworked or in maintenance.	1	

TABLE 17

SPECIFIC CAPITAL EQUIPMENT FOR NONCONSOLIDATION OPERATIONS
(concluded)

Equipment Item	Cell	Function	Quantity	Remarks
Hand Tools (air and electric)	6	Do a variety of functions, i.e., removing bolts, drilling, etc.	TBD	Rework area expected to have several tools; others are not identified.
Impact Wrench	1A-1B, Others	Provide ability to remotely install/ replace cell equipment.	TBD	
Fuel Rack and Drive	1A-1B	Temporarily store fuel awaiting processing and be able to move rack to replenish stored amount.	2	Racks are loaded in Cells 4 and 5 and moved to Cells 1A-1B for storage.
Transfer Port	1A-2A, 1B-2B	Allow transfer of fuel rods from Cells 1A-1B to Cells 2A-2B while minimizing contamination transfer between cells.	2	May also have to accommodate "reverse flow" of loaded canister going to rework Cell 6.
Waste Lid Sealer	2A-2B	Seal waste containers.	2	Device may use mechanical seal rather than welding.
Waste Assay Equipment	9	Assay waste containers for safeguards purposes.	1	Probably passive neutron detection.
Canister Handling	8,9,10	Move loaded fuel canister for decontamination and assay.	3	Cranes with grapples could be used, but conceptual design assumed dedicated equipment.
Waste Collection Bin	1A-1B	Collect fuel frame awaiting volume reduction.	2	
Fire Suppression Equipment	All	Suppress a fire in the cells.	TBD	Water to be avoided. Halon 1301 recommended. Ten thousand cfm would flood all cells to 3% concentration in 10 sec.
Ventilation Equipment	All	Provide ventilation to cell for heat removal and contamination control.	TBD	Conceptual design has assumed adjacent filter niche rather than in-cell filtration.
Through-the-Wall Manipulator	6	Provide operator sense of "hands on" for maintenance and rework.	TBD	Conceptual design has assumed two pairs in rework cell only, with other cells providing manipulator plugs for later insertion as required.

TBD. To be determined by the architect/engineer.

will be escaping through both new and existing cladding failures while the fuel is in the cell.

Because it is anticipated that the sum of all such releases will be much smaller than allowed by the regulations for other facilities with potential Kr releases, no recovery system has been investigated. Similar reasoning applies to other long-lived fission gases such as iodine.

3.8 Life-Cycle Costs

3.8.1 Development Costs

As discussed earlier, the complexity of the consolidation equipment requires a prototype development program. A similar program was carried out by AGNS in fiscal years 1980 and 1981 for a somewhat different consolidation system. Although the preliminary conceptual designs presented in this report can be thought of as a second-generation effort, the cost estimates are conservatively based on the earlier AGNS pioneering effort. The values are thus judged to be within 20% of the ultimate costs. From Table 11, it can be seen that the total $5,824,000 estimated for equipment development comprises $3,626,000 in labor costs and $2,198,000 in material costs. To these costs must be added the development costs in Table 22 associated with off-normal recovery equipment generated later and discussed in Section 3.9. This total is then $5,974,000.

3.8.2 Capital Costs

Capital cost estimates of the designed consolidation equipment are based on experience with a first-generation prototype and are thus felt to be within 20% of the ultimate costs. As can be seen in Table 16, the total procurement cost is estimated to be $7,398,000. To these costs must be added the capital costs in Table 18 associated with off-normal recovery equipment generated later and discussed in Section 3.9. The total is then $7,703,000. This estimate does not include the cost of

specific nonconsolidation equipment items that will be determined by the architect/engineer. A discussion of these items is contained in Section 3.7.2.

3.8.3 Operating Costs

3.8.3.1 Personnel

The development of personnel requirements based on a 2-shift, 5-day/wk operation is discussed in detail in Section 3.3. From Table 18, it can be seen that 6.1 men are required to meet direct staffing needs. No allowance has been made for personnel who provide services normally considered necessary throughout the surface facilities, such as engineering, guards, fire protection, health physics (except as specified), laboratory, environmental monitoring, utilities, etc. Because the nonmaintenance functions are carried out during two shifts, those figures are doubled to obtain manpower requirements as follows.

TABLE 18

DIRECT STAFFING NEEDS

Labor Category	Staffing Requirements (number of personnel)	Manpower Requirements (man-yr/yr)
Supervisory	0.2	0.4
Clerical	0.4	0.8
Operations	4.0	8.0
Maintenance	1.5	1.5
	6.1	10.7

3.8.3.2 Consumables

It is anticipated that the cost of depletable items will be significant primarily because of the cost of fuel canisters and waste containers. Repository requirements, however, are not yet firm enough to allow their final design and costing. For that reason, only the required quantities are provided in Table 19.

TABLE 19

ANNUAL QUANTITY OF DEPLETABLE ITEMS

Item	Units
BWR Canisters/Lids	173
PWR Canister/Lids	335
Waste Containers/Lids	100

The requirements for consumables have been identified and costed (1984 dollars) in Table 20. Annual allowances have been made where quantities to meet requirements could not be estimated. Thirty-year life-cycle costs for these consumables would be $855,000.

TABLE 20

AMOUNT OF CONSUMABLES REQUIRED ANNUALLY AND THEIR ESTIMATED COST

Item	Annual Requirement	Estimated Annual Cost*
Welding Wire	125 lb	$ 500
Inert Welding Gas	7,500 cu ft	500
Other Welding Supplies	(Allowance)	1,000
Canister Decontamination Supplies	(Allowance)	5,000
Shear Blades (bimonthly replacement for fixed and moving blades)	12 units	4,800
End-Fitting Removal Tools (daily PWR cutter replacement)	(Allowance)	13,000
Disposable Power Tools for Rework Cell	(Allowance)	1,200
Accountability Documentation Supplies	(Allowance)	2,500
Total		$28,500

*Estimates are given in 1984 dollars.

A number of personnel-related items such as shoe covers, coveralls, etc. are not included. It has been assumed that such items would be included with the overall plant support allowances. Plant-related items, such as air filters, air samplers, etc., have been treated similarly.

3.8.3.3 Utilities

Table 5, found in Section 3.4 (Utility Requirements), provides a detailed list of equipment requiring utility support. Specific requirements in the decontamination area are not known and cannot be estimated in the absence of repository acceptance criteria and/or decontamination procedures, both of which are outside the scope of this report. Table 21 summarizes requirements that have been identified.

TABLE 21

IDENTIFIED ANNUAL UTILITY REQUIREMENTS

Utility	Supply	Estimated Annual Requirement
Electricity	110/220/440/VAC	340,000 kWh/yr
Utility Air	100 psi	100 cfm
Utility Air	500 psi	(Determined by final design)
Equipment Offgas Vent	Several inches of water negative	1,600 cfm

3.8.3.4 Maintenance

The earlier detailed discussion of maintenance costs presents the rationale for a total materials cost of $428,000. Labor costs are developed separately and are included in the section on staffing.

3.9 Off-Normal Conditions Study

A study was made about the potential off-normal conditions that could occur during fuel consolidation and the procedures to be used to

correct the conditions and resume normal processing. The study included descriptions of required recovery equipment, its fabrication cost estimates, and its development costs and schedules. Consolidation design criteria were also revised in this study as a result of off-normal considerations. A summary of the study results follows; details are provided in Appendix J.

The study includes those off-normal conditions that can potentially affect safety and/or throughput. These conditions, with estimates of their probable frequency of occurrence given in the parentheses are as follows:

- fuel not qualified for consolidation (multi-annual);
- canister decontamination (multi-annual);
- jammed fuel rods (multi-annual);
- broken fuel rods (multi-annual);*
- dropped fuel assembly (annual);
- 15-minute power loss (annual);*
- major component failure (annual);*
- operator error (annual);*
- evacuation of facility (annual);
- rejected canister weld (annual);
- hardware waste container with fuel (lifetime);
- fuel identity error (lifetime);*
- extended loss of power (lifetime);*
- loaded canister drop (lifetime);*
- canister rod spill (lifetime); and
- fire (lifetime).

Design bases developed for normal processing in the consolidation facility were modified, as required. The revised bases and entirely new bases resulting from addressing off-normal conditions include the following conditions--namely that

---

*Frequencies based on 11/84 draft of ANS-57.10 standard, "Design Criteria for Consolidation of LWR Spent Fuel."

- some spent fuel might be classified as off-normal and be packaged without consolidation;

- handling broken fuel cladding might necessitate packaging the broken rods before they are placed in the consolidation canister;

- consolidation equipment must operate at temperatures up to 500°F for some waste sources;

- canister partitions that can be handled separately and inserted into the canister within the consolidation hot cells might be used for some off-normal conditions;

- the impact of off-normal conditions on safety and throughput must be addressed;

- equipment must remain safe after failure ("fail-safe" design); and

- the facility structure must provide (1) physical protection from external off-normal loads, (2) a physical barrier from external flooding, and (3) a barrier to confine contamination within the facility.

Fire and natural disasters (tornado, earthquake, etc.) are the off-normal conditions that impact safety. These conditions could present a danger to personnel and to the confinement capability of the facility. The facility and its accessories and will be designed by the architect/ engineer to mitigate the impact of these events. Any of the other off-normal conditions discussed in this study do not appear to represent a safety hazard to consolidation personnel, the public, or the environment. Other off-normal events will only affect throughput, though none of these events is significant in view of the duplicate processing lines discussed in earlier sections. Procedures and equipment needed to recover from these other off-normal conditions have been found to be compatible with the consolidation system, its ancillary equipment, and the facility layout included in the conceptual design.

Estimates of capital costs, development costs, and schedules for recovery equipment are shown in Table 22. Details of these costs and schedules are provided in Appendix J. A zero schedule entry in Table 22 indicates that development does not appear necessary because of the relatively minor degree of complexity and the availability of similar technology. Development costs for this recovery equipment are $150,000 and capital costs are $305,000.

TABLE 22

RECOVERY EQUIPMENT COST AND SCHEDULE
(Estimates are given in 1984 dollars)

	Required Number	Development Costs ($)	Development Schedule (mo)	Extended Capital Costs ($)
Horizontal Pass-Through Modifications	2	0[a]	0[a]	50,000
Alternative: Vertical Cell Pass-Through	2	0	0	70,000[b]
Single Fuel-Rod Grapple and Pulling Device	8	50,000	3	80,000
Broken Fuel-Rod Sorting Table	1	0	0	15,000
Miscellaneous, Remotely Operated Tools	1 Lot	50,000	3	120,000
Rework Fissile Material Monitor	1	50,000	3	10,000
Rework Canister Rotating Device	1	0	0	30,000
TOTALS		$150,000	9	$305,000

a. Zero indicates no cost development time required.
b. Not included in totals.

REFERENCES

1. Dennis, A. W., P. D. O'Brien, R. Mulkin, and J. C. Frostenson, "NNWSI Repository Operational Procedures for Receiving, Packaging, Emplacing, and Retrieving High-Level and Transuranic Waste," Sandia National Laboratories, Albuquerque, NM, SAND83-1166, May 1984.

2. Bailey, W. J., "Status of Rod Consolidation," Pacific Northwest Laboratory, Richland, WA, PNL-5122, April 1985.

3. Permanent Records Research, Allied-General Nuclear Services, Barnwell, SC, K. J. Anderson, December 1983.

LIST OF ACRONYMS

AGNS	Allied-General Nuclear Services
BEI	BE Incorporated
BWR	Boiling water reactor
CE	Combustion Engineering, Inc.
CEP	Capital equipment program
DOE	Department of Energy
LWR	Light water reactor
MTIHM	Metric tons of initial heavy metal
MTU	Metric tons of uranium
MWD	Megawatt-day
NAC	Nuclear Assurance Corporation
NNWSI	Nevada Nuclear Waste Storage Investigations
NRC	Nuclear Regulatory Commission
PWR	Pressurized water reactor
UST&D	U.S. Tool and Die, Inc.

APPENDIX A

DRAWINGS

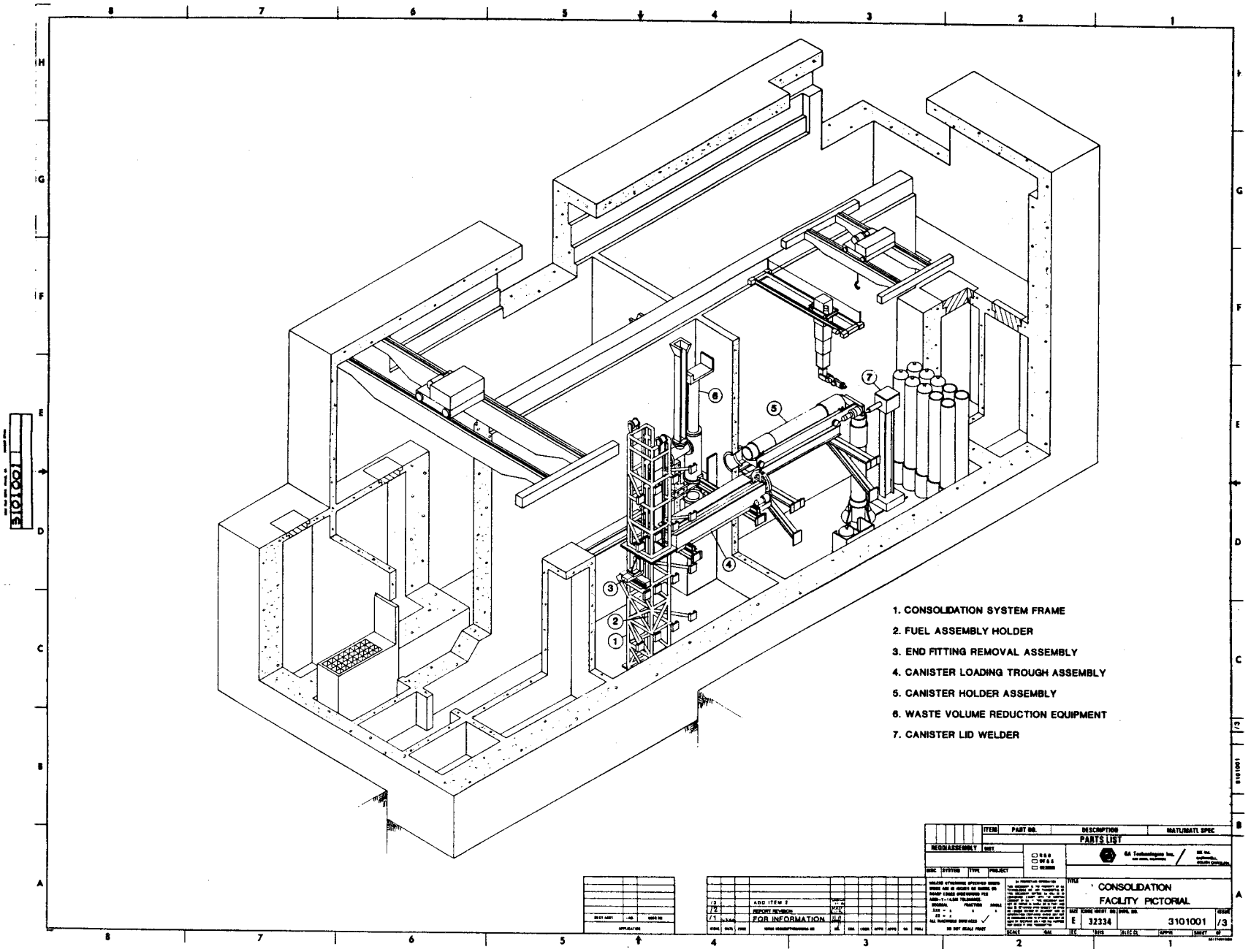

Figure A-1. Consolidation Facility Pictorial

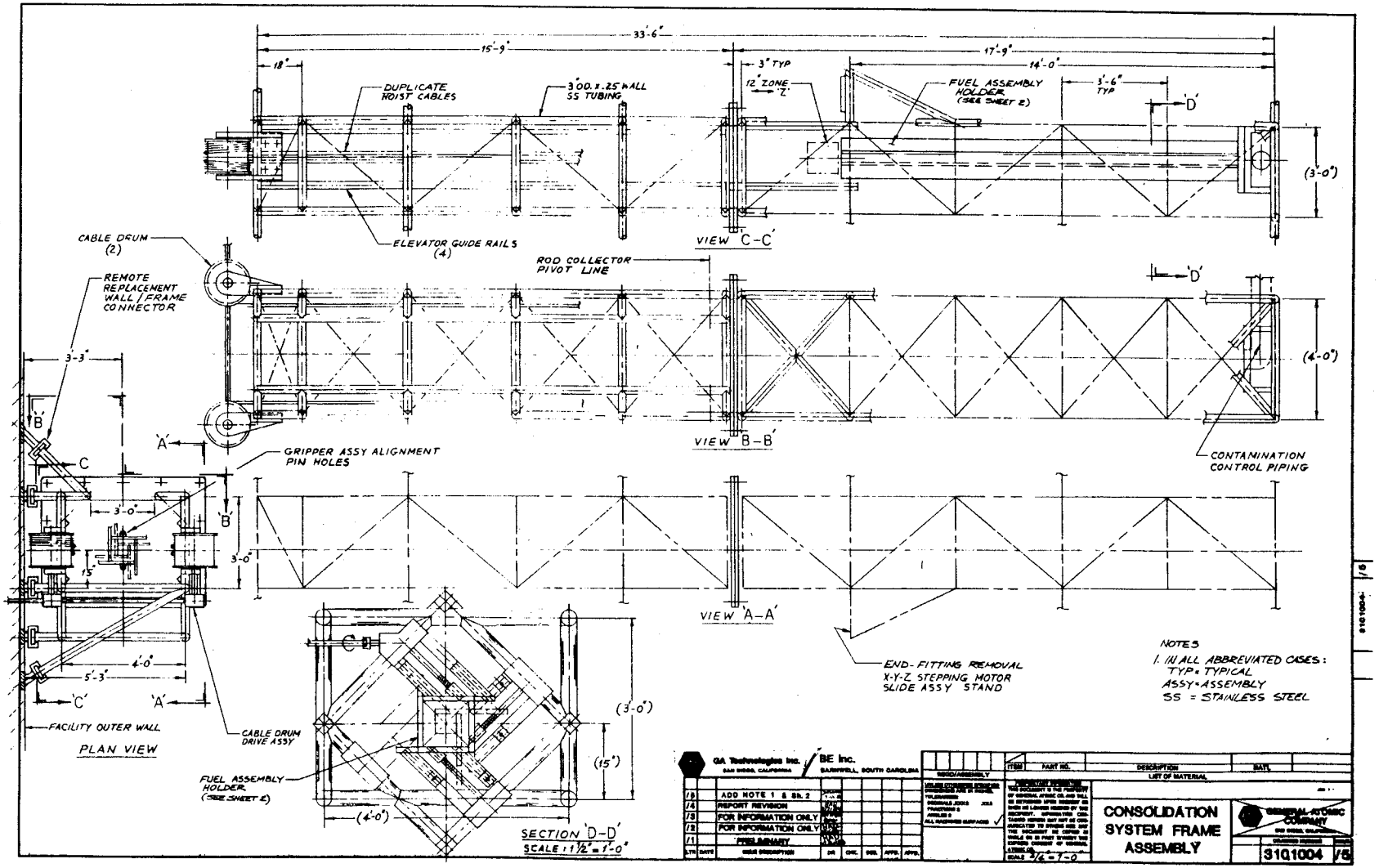

Figure A-2. Consolidation System Frame Assembly

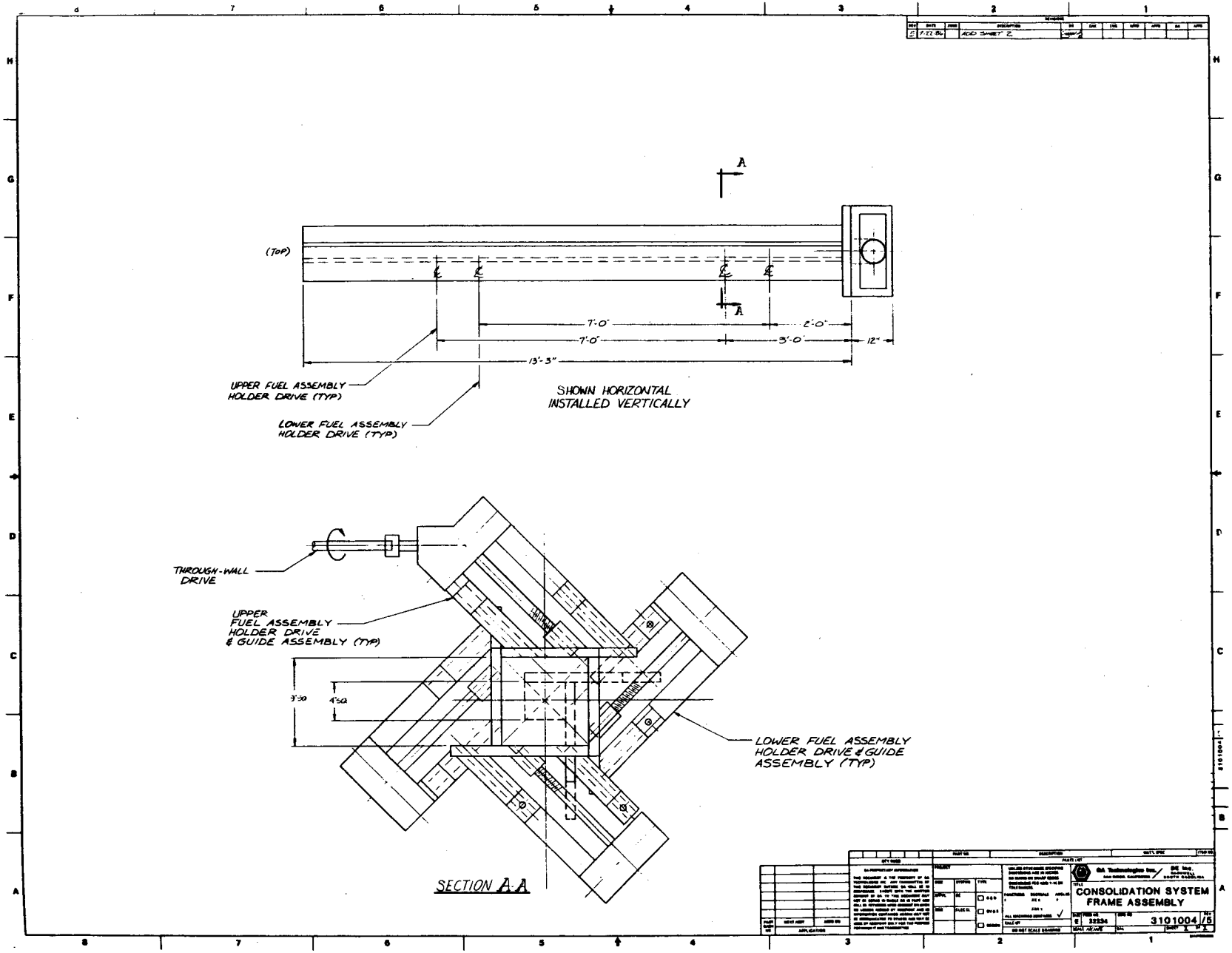

Figure A-2. Consolidation System Frame Assembly (concluded)

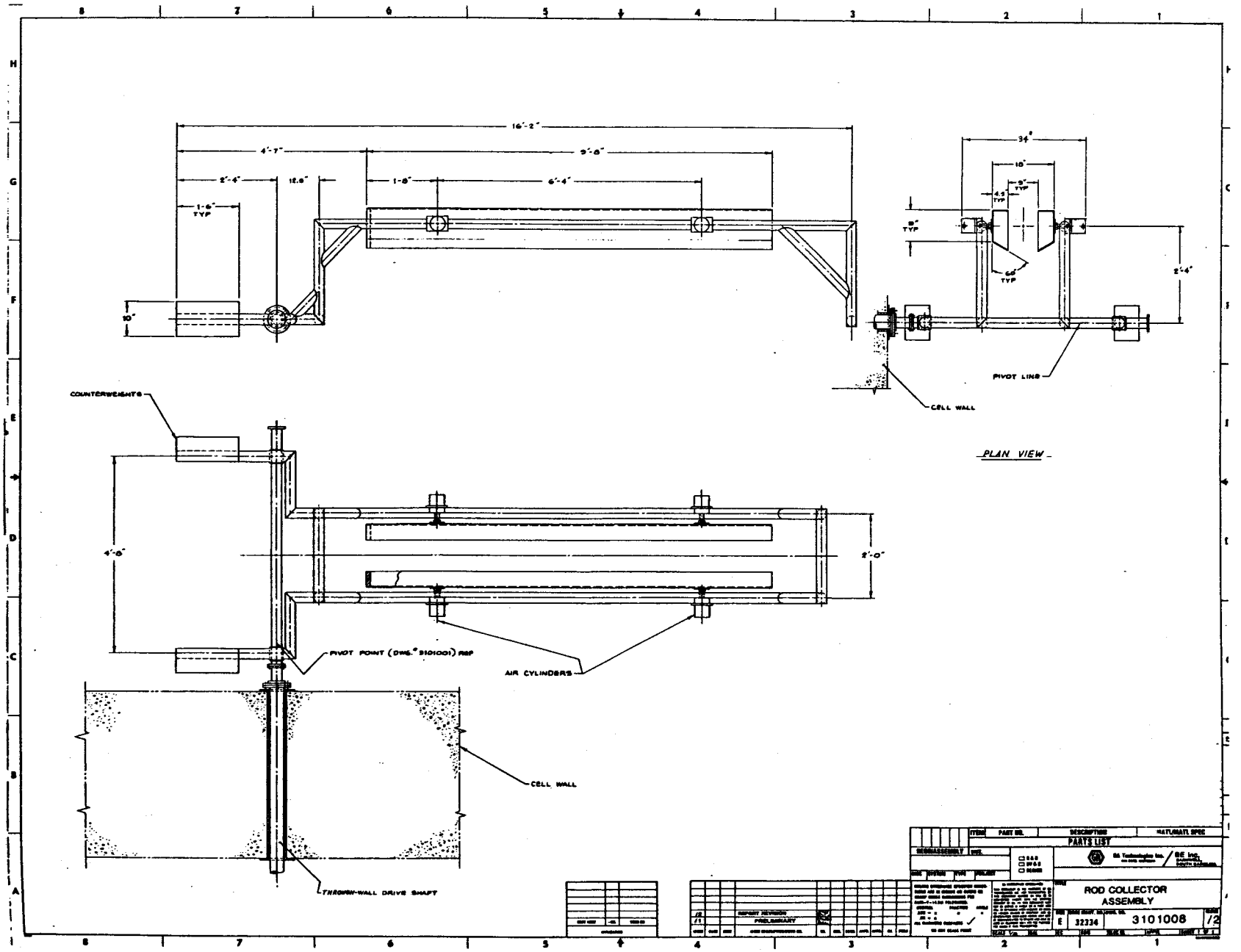

Figure A-3. Rod Collector Assembly

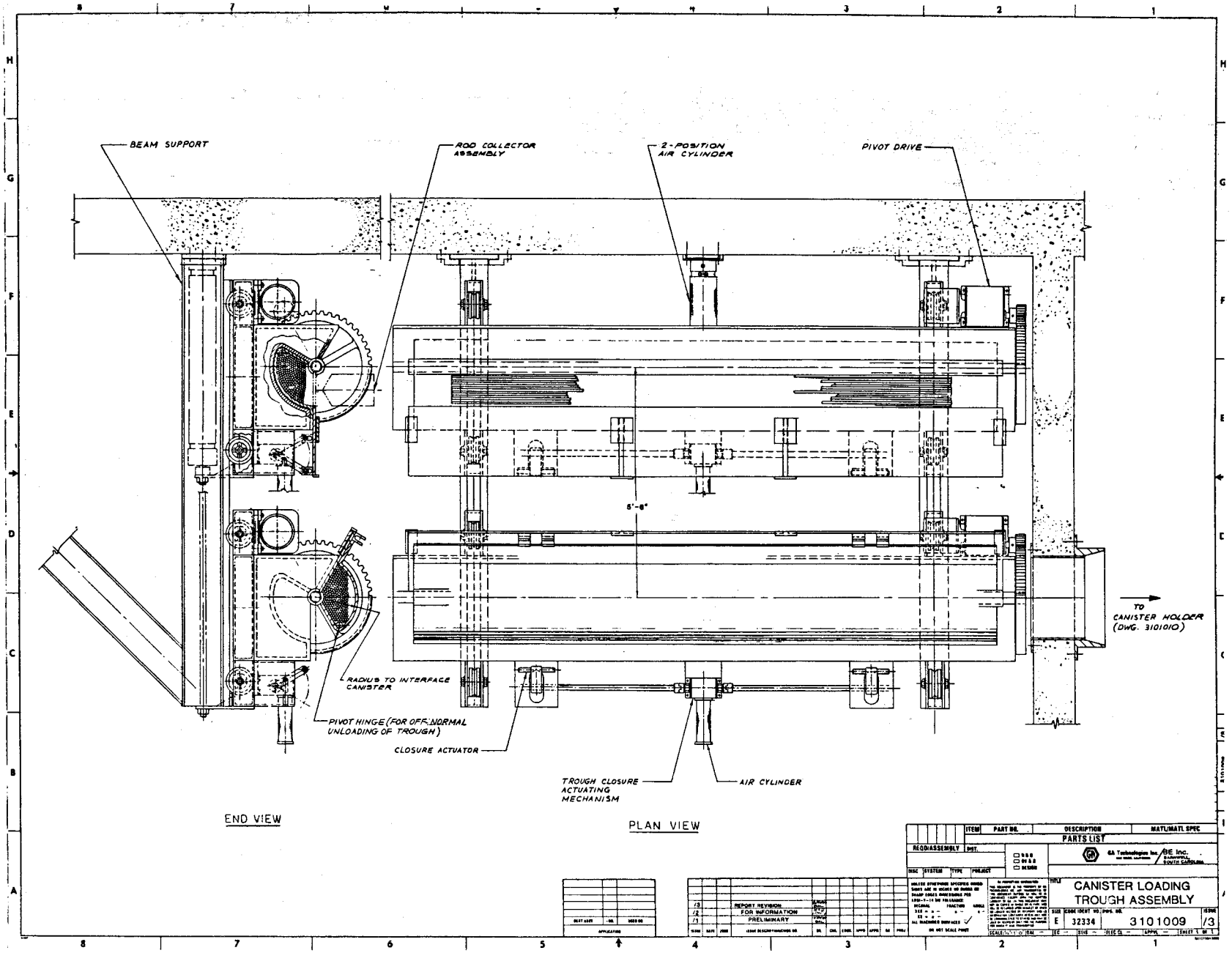

Figure A-4. Canister Loading Trough Assembly

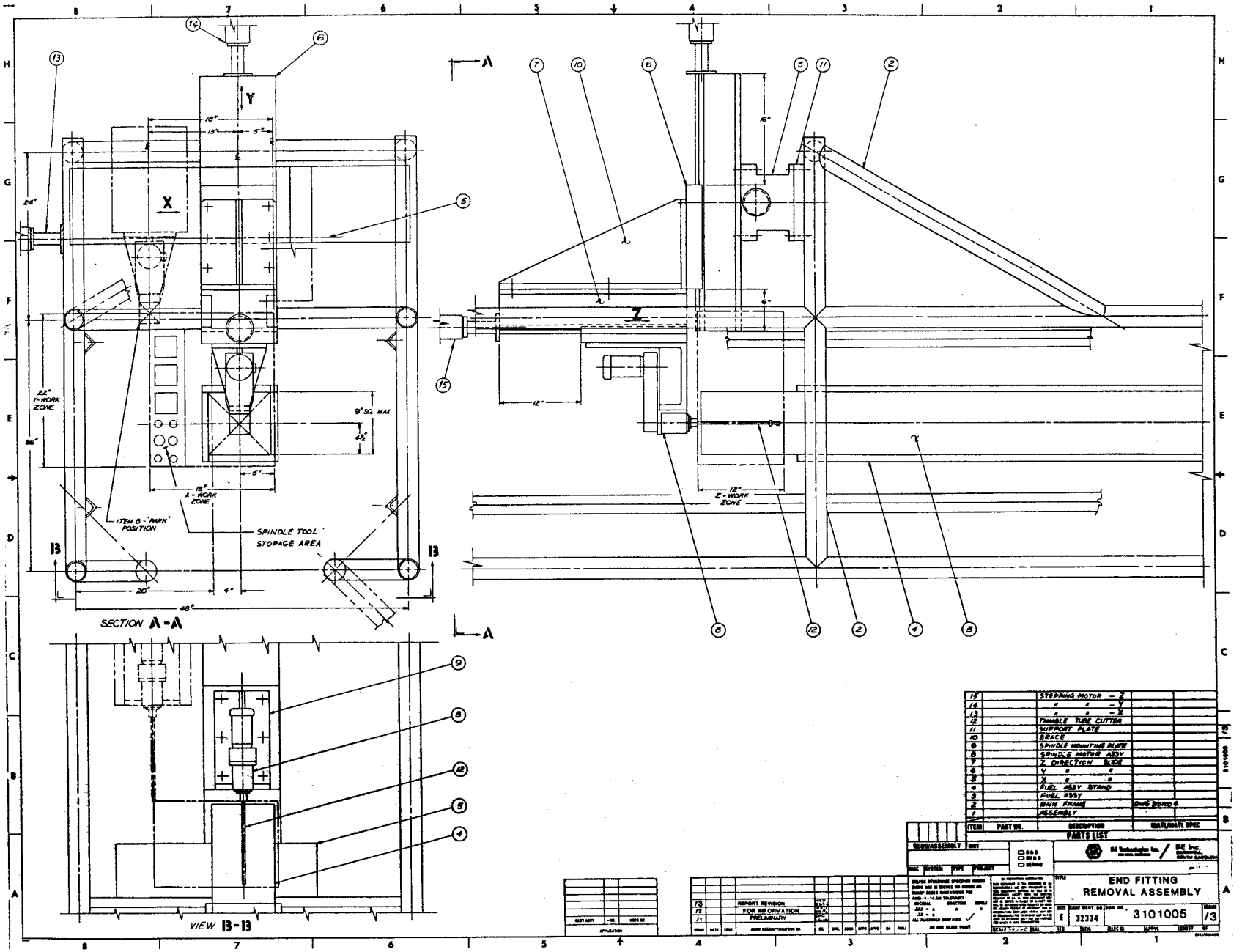

Figure A-5. End-Fitting Removal Assembly

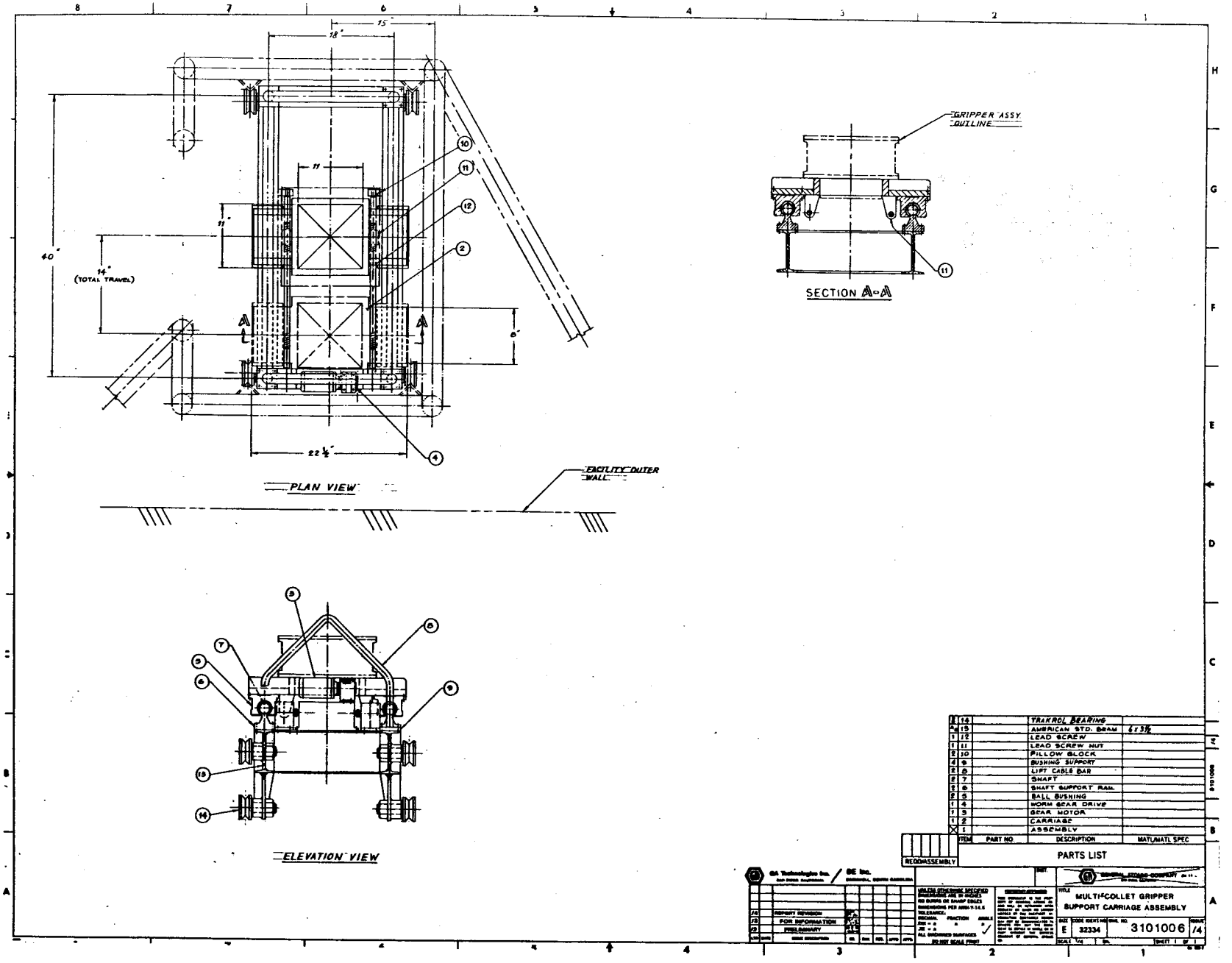

Figure A-6. Multi-Collet Gripper Support Carriage Assembly

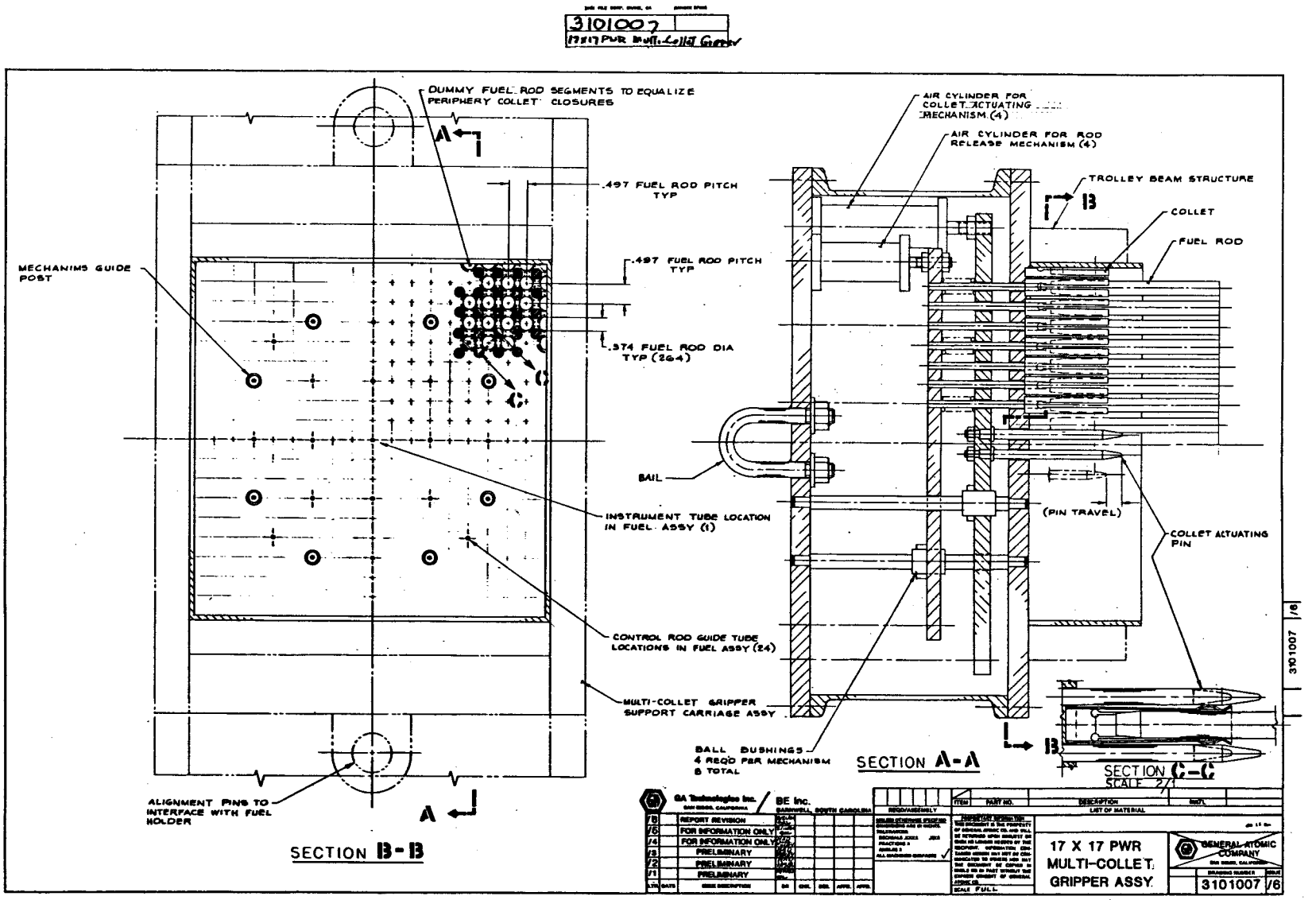

Figure A-7. PWR Multi-Collet Gripper Assembly (17 x 17)

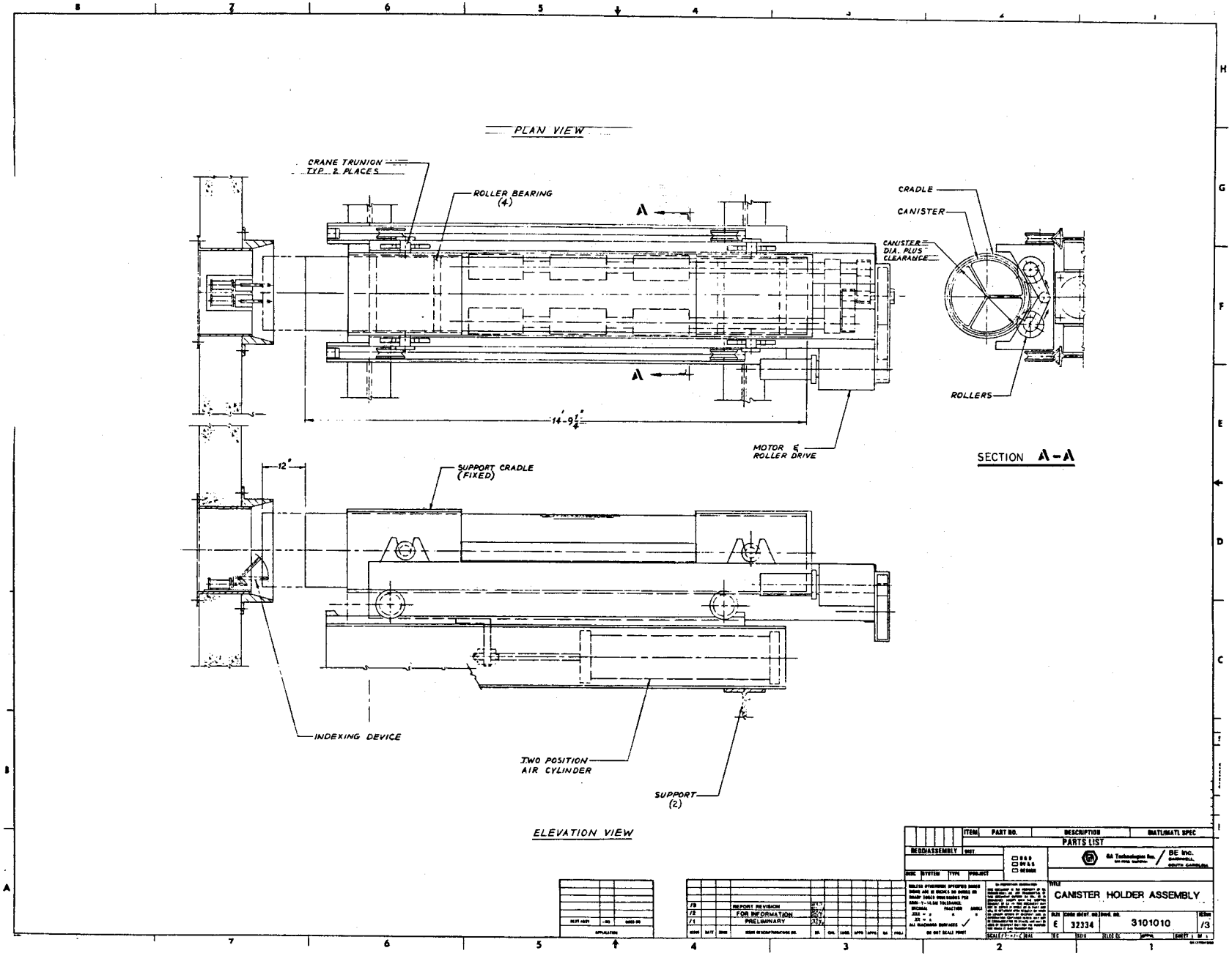

Figure A-8. Canister Holder Assembly

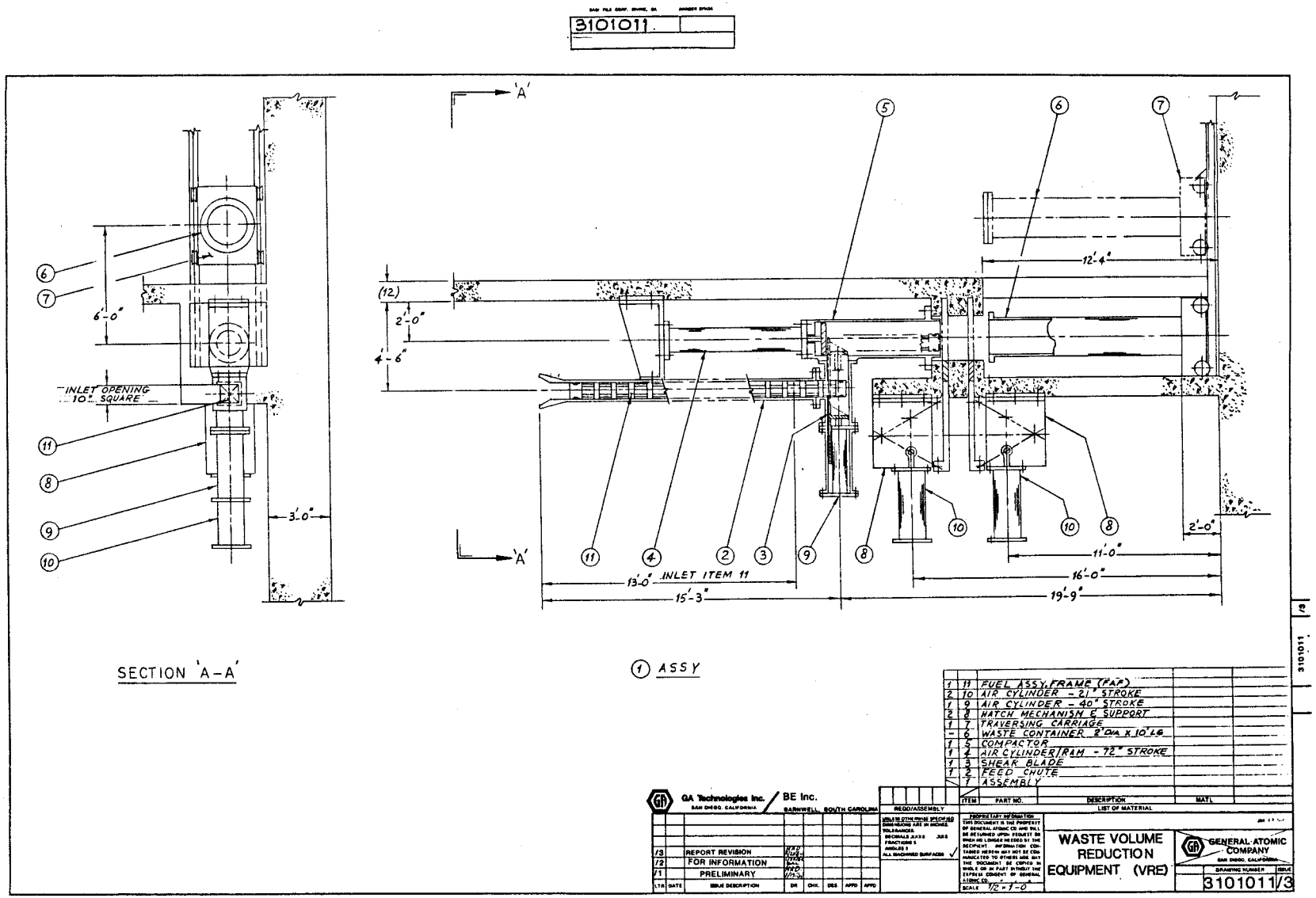

Figure A-9. Waste Volume Reduction Equipment (VRE)

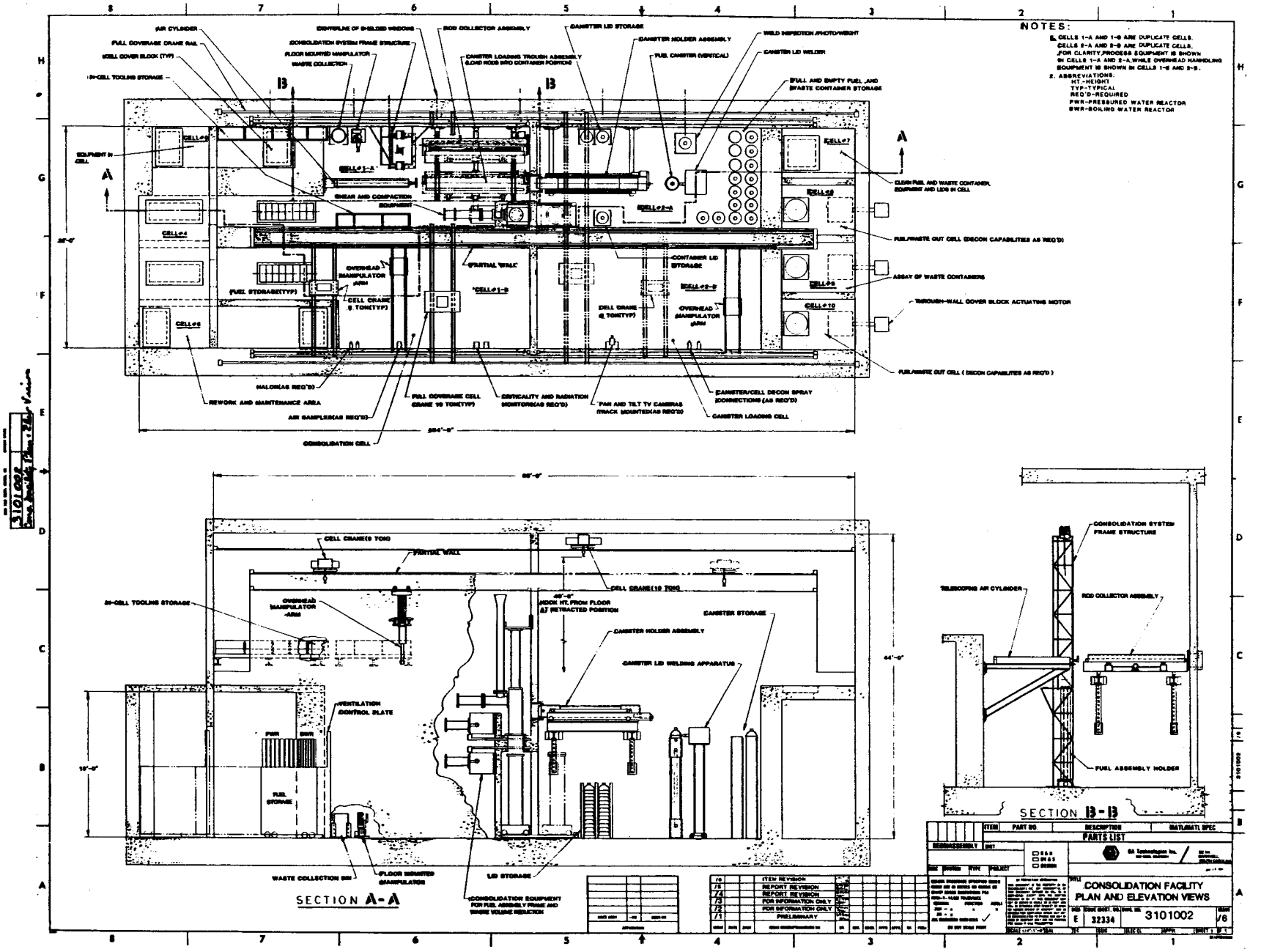

Figure A-10. Consolidation Facility Plan and Elevation Views

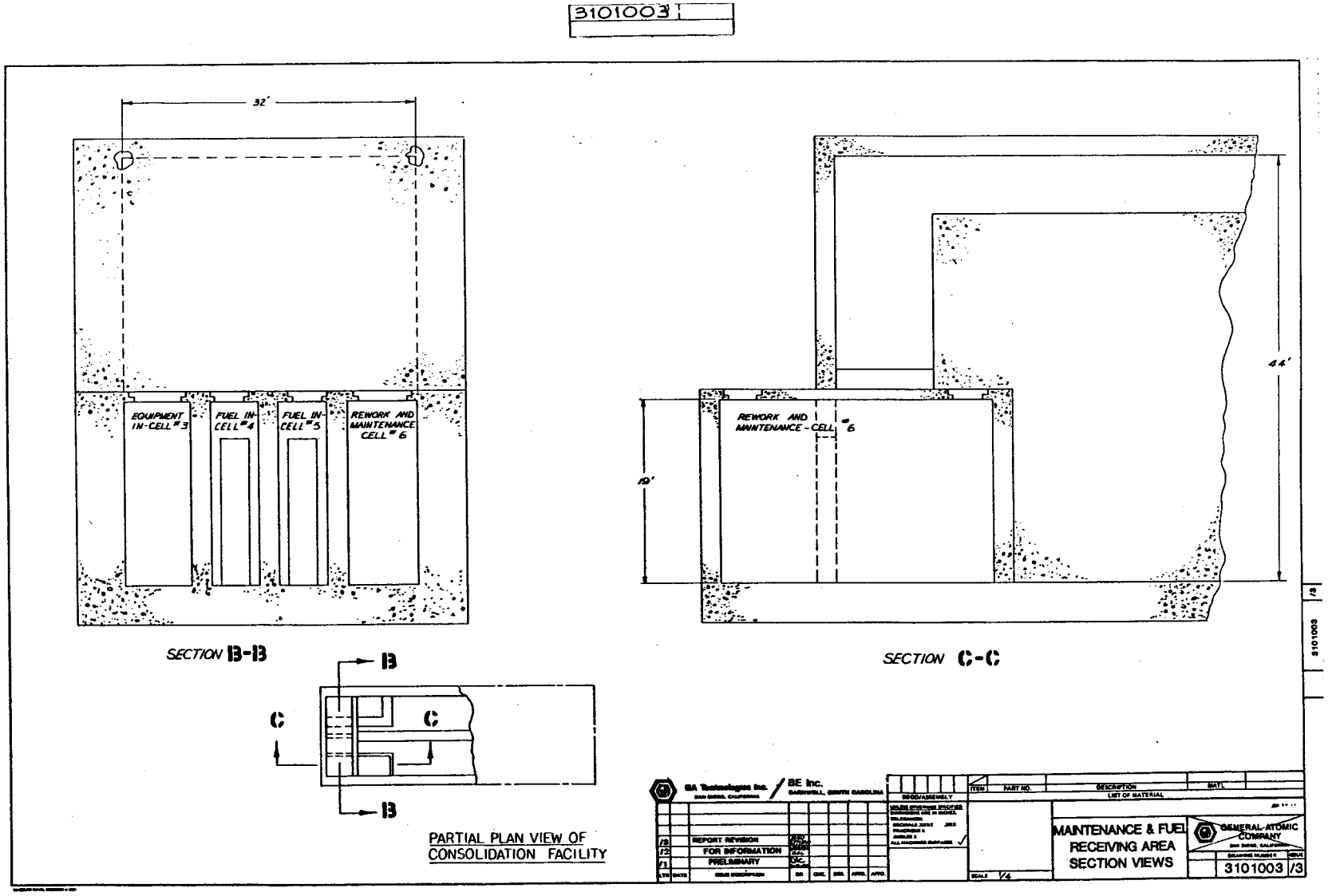

Figure A-11. Maintenance and Fuel Receiving Area Section Views

APPENDIX B

OPERATIONS SEQUENCE DIAGRAM

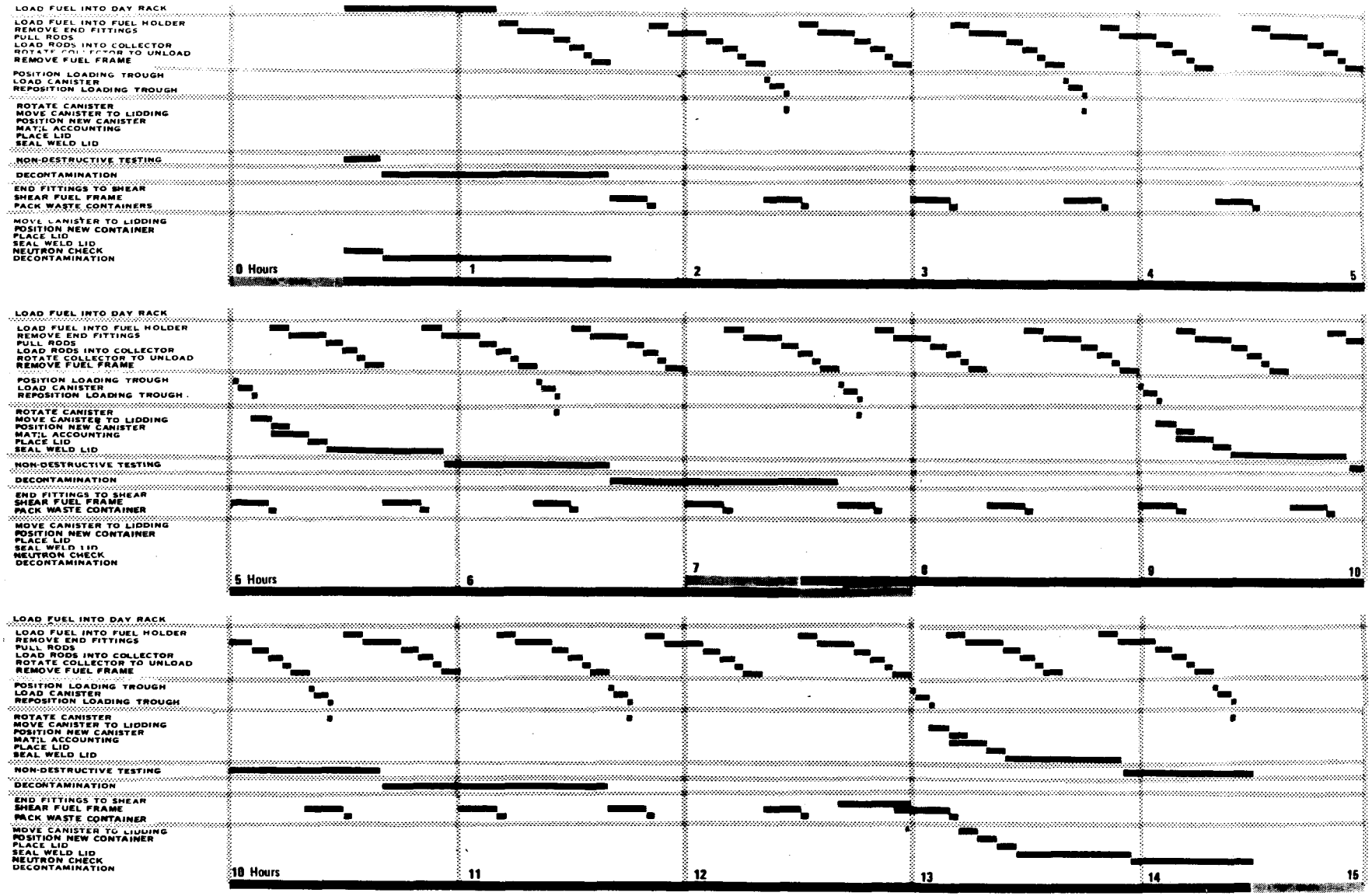

Figure B-1. Operations Sequence Diagram

APPENDIX C

DESIGN BASES

APPENDIX C
DESIGN BASES

The precise mix of fuel that will be received at the repository is not known; therefore, it is necessary that the design bases be broad enough to cover a reasonable range of fuel designs. For this study, all LWR fuel designs have been considered. However, future design changes may require additional equipment flexibility. Some obsolete types of spent-fuel assemblies currently being stored are believed to constitute such a small fraction of the whole fuel inventory that special equipment development is not justified.

C-1.0 Fuel

The consolidation equipment will disassemble and package both PWR and BWR fuel assemblies. The weight ratio (in MTU) of PWR to BWR spent fuel is assumed to be 2:1, respectively, and 1,500 MTU are expected annually. The design basis dimensions are shown in Table C-1. It has been assumed that inspection of fuel cladding integrity is not a required consolidation system function.

C-2.0 Canister

The PWR consolidated fuel canister will contain spent-fuel rods from six PWR fuel assemblies. The BWR consolidated fuel canister will contain rods from 18 BWR fuel assemblies (Section 2.0, Reference 1). Both PWR and BWR fuel canisters will be fabricated from stainless steel.

The estimated outside diameter of the PWR canister is 19.7 in., and the overall length is 177.2 in. Loaded with fuel, the PWR canister will weigh no more than 9,900 lb. The thermal power or heat generation rate of the canister is estimated at 3,050 W.

The BWR consolidated spent-fuel canister tentatively will have a 22.4-in. outside diameter and will be 177.2 in. long. When loaded, the

TABLE C-1

SPENT-FUEL ASSEMBLY DIMENSIONS FOR THE DESIGN BASIS

Fuel Assembly Parameter	Dimensions Minimum	Dimensions Maximum
Length	137.1 in.	182.5 in.
Width (square)	4 in.	9 in.
Pitch	0.497 in.	0.738 in.
Array (number of rows of rods)	6 x 6	17 x 17
Weight	--	1,700 lb
Frame Weight	--	200 lb
Guide Tubes:		
Outside diameter	0.480 in.	1.115 in.
Inside diameter	0.448 in.	1.043 in.
Grid Support Spacing (center to center)	9 in.	24 in.
Fuel Rod		
Length	120 in.	150 in.
Outside Diameter	0.374 in.	0.570 in.

BWR canister will weigh no more than 12,300 lb. The thermal power is estimated at 3,000 W.

C-3.0 Equipment Lifetime

It is anticipated that the consolidation equipment will operate for about 24 yr, at which time the storage capacity of the repository will be reached. It is also anticipated that there will be a time lag between installation of equipment and the start of operations. Therefore, all consolidation equipment should be designed for a minimum lifetime of 30 yr. Equipment, expected to fail before that time, should be designed to by replaced by remote method.

C-4.0 Radiation Exposure

The current limit for worker radiation exposure is 5 rem/yr. The design goal for the consolidation operation is to reduce this dose to comply with the principle of as low as reasonably achievable, that is,

not to exceed 1 rem/yr under normal operating conditions. For exposure calculations, PWR fuel is assumed to be 10-yr-old Westinghouse fuel with a 3.2 wt% enrichment and 32,717 MWd/MTIHM burnup. BWR fuel is assumed to be 10-yr-old General Electric fuel with a 2.75 wt% enrichment and 27,500 MWd/MTIHM burnup. The detailed gamma and neutron spectra are shown in Appendix H tables.

C-5.0 Capacity

The consolidation equipment will be designed to process 2,016 PWR and 3,100 BWR fuel assemblies annually, a total of 5,116 assemblies (Reference 1). The annual number of consolidated fuel canisters for PWR and BWR fuel rods, therefore, will be 336 and 173, respectively. The repository itself will have a spent-fuel capacity of 35,000 MTU at an average receipt rate of 1,500 MTU/yr. (Subsequent to completing the design of the consolidation equipment, the annual receipt rate was increased to 3,000 MTU/yr; and repository capacity was increased to 70,000 MTU.) It is assumed that workers performing consolidation tasks will be productive 6 hr/day (8-hr days minus clothes changing time, work, breaks, etc.), 250 days/yr (2 shifts/day). Space will be allocated for two identical processing lines with each line rated at a throughput of 1,500 MTU/yr.

C-6.0 Codes and Standards

The repository and its consolidation facility will be licensed by the Nuclear Regulatory Commission. The detail design must comply with various orders, regulations, codes, and standards that will be specified later. The conceptual design should conform to generally acceptable nuclear facility standards as expressed in the other design bases and comply with governmental requirements and regulations, as for example, DOE Order 5480.1. This order states that onsite personnel exposure levels less than one-fifth of the permissible dose equivalent limits prescribed in this chapter should be the design objective. Because the permissible dose equivalent limit is 5 rem/yr, the consolidation facility design objective, therefore, will be exposures that are less than 1 rem/yr.

C-7.0 Criticality

The fuel will be maintained in a configuration that ensures the neutron multiplication factor (K-eff) is less than 0.95. Only under moderated conditions can LWR fuel go critical. Because unmoderated conditions are assumed, criticality analyses are not required for the consolidation equipment conceptual design.

C-8.0 Seismicity

Any equipment or structures in the consolidation hot cell will be designed with features that minimize fuel damage during an earthquake.

C-9.0 Contamination Control

All fuel processing that generates cutting fines or loose particles will be designed with a particle collection system. In-cell work stations will be designed to collect particles that fall during the consolidation processing.

Provisions must be made to decontaminate fuel canisters before they are inserted into a transport cask or before they are stored in an in-process fuel storage facility.

C-10.0 Materials of Construction

Materials will be selected for long-term use in a highly radioactive environment to the extent feasible. Materials expected to degrade in this environment will be avoided. Where this is not practical, the component parts expected to fail during the design life of the facility will be designed to be easily replaced. Corrosion will be minimized and will not be allowed to impair the operation of the consolidation equipment. Decontamination will be considered in the design of the consolidation equipment. Material will be selected to withstand thermal stresses generated by temperatures of up to 500°F resulting from contact with fuel.

C-11.0 Maintenance and Inspections

Larger nonstructural components and equipment within the consolidation hot cell will be designed with detachable subassemblies rather than designed as a unitized assembly. The size of the subassembly will be chosen for ease of replacement, repair, inspection, or disposal by remote handling operations. Items requiring periodic replacement will be designed with a readily available back-up. Components that are critical from an operations or safety standpoint will be designed with duplicate features.

All components, especially moving parts, will be capable of being inspected from outside the hot cell, using viewing windows, closed-circuit television, mirrors, or periscopes. Overhead cranes and associated equipment will provide the capability for remote-handled maintenance. Manipulators and robotics will be used when they offer advantages.

C-12.0 Waste Disposal

The transuranic waste canister developed by Rockwell Hanford for the defense program will be used to dispose waste (e.g., the fuel assembly frame).

C-13.0 Temporary Fuel Storage

After cask unloading, fuel assemblies arriving at the repository will be stored temporarily in a vertical position before consolidation. After consolidation, the canisters will again be stored before they are transported and emplaced in the underground repository.

C-14.0 Repository Onsite Transport

A transport vehicle designed specifically for repository use will move fuel from the consolidation facility to the emplacement site.

C-15.0 Decommissioning

Appropriate design features to facilitate decommissioning must be provided when specifying consolidation equipment, auxiliary equipment, support structures, and layout. When selecting equipment or processes on the basis of total life-cycle costs, the cost of decommissioning must be considered.

C-16.0 Off-Normal Events

Design bases for dealing with off-normal conditions are not included here. Necessary modifications to the above design bases to include off-normal conditions are provided in Appendix J.

C-17.0 Summary

The design bases that have affected the recommended conceptual design significantly include all of the above bases except those for seismic effects, onsite transport, and decommissioning. The design bases for these three, however, are not compromised by the conceptual design that has been developed; instead, they influence detail design rather than the conceptual design.

APPENDIX D

DESIGN RATIONALE

APPENDIX D

DESIGN RATIONALE

Equipment alternatives were reviewed and evaluated before choices were made that resulted in the recommended consolidation equipment conceptual designs. The alternatives include (1) those reviewed in the survey of existing technology and (2) new conceptual designs.

Design considerations on which equipment choices have been based include

- process orientation,
- fuel holding,
- end-fitting removal,
- rod pulling,
- rod rearraying,
- canister loading,
- nonfuel component packaging,
- rework,
- hot-cell operations,
- safety, and
- safeguards and decommissioning.

The following discussion of the design considerations explains the equipment recommendations and includes safety and other pertinent design considerations.

D-1.0 Disassembly Process Orientation

The disassembly portion of the consolidation process (i.e., fuel positioning and holding, end-fitting removal, and fuel-rod pulling) can be horizontal or vertical. Factors favoring the horizontal orientation include the following.

- Personnel access to adjacent aisles would be facilitated for those hot-cell operations requiring access.

- The height of potential accidental fuel-rod drop would be inherently minimal because of equipment features.

- Existing technology to be used as a reference for consolidation in a hot-cell is limited to systems that orient the spent-fuel assemblies in the horizontal direction.

Factors favoring vertical orientation include the following.

- Vertical handling of individual fuel assemblies reduces the risk of overly stressing the cladding. Bending stresses from horizontal handling that would otherwise be cumulative with the axial stresses created during rod removal would be eliminated. In the horizontal orientation, positioned fuel rods must be supported at 3-ft intervals to ensure reasonable safety factors for cladding stress.

- The commercially available end-fitting grapple attachments are designed for vertical engagement.

- Cutting fines and dislodged CRUD can be collected with the aid of gravity in a receptacle approximately equal in size to the cross-section of the fuel assembly. The collection area would be approximately 15 times greater for the horizontal orientation than vertical orientation because it must include the lateral area of a fuel assembly.

- The force required to pull the upright fuel-rods is more easily equalized than it is on the horizontal rods, if all rods are pulled simultaneously, because the fuel rod spacer on the bottom row of the horizontally positioned rods may be deformed by the weight of the rods above, resulting in the need for greater gripping forces on these rods.

After considering the above factors, the vertical orientation was chosen for the consolidation process through the rod-pulling operation. This choice is discussed below.

A consolidation facility will probably be operated from a central control room. Operator access to adjacent aisles will be primarily for maintenance. The easier operational access of the horizontal orientation is of limited importance.

Accidental fuel-rod drop is expected to be limited. In both horizontal or vertical processing, the hot cell will be designed to prevent accidental breakage of cladding during fuel recovery and offgas confinement. Also, vertical systems can be designed to ensure drop heights comparable to those inherent in horizontal systems.

The hot-cell vertical system has not been demonstrated with prototype equipment. However, a review of the demonstrated technology of vertical systems associated with wet procssing indicates that development of hot-cell fuel consolidation equipment would not be difficult. Essentially, these activities would involve adapting elements of existing designs for horizontal, hot-cell processing for use in a demonstrated vertical system.

D-2.0 Ancillary Process Orientations

Fuel-consolidation ancillary processes will be required both before and after the disassembly operation. These include fuel transfer from in-process storage, fuel-rod canister loading, nonfuel component packaging, and rework. Each is subject to a process orientation selection.

Because in-process fuel-assemblies are stored vertically and the vertical orientation has been chosen for the consolidation process up to and including rod pulling, no safety or mechanical considerations appear to justify reorienting the fuel assembly for transfer. Hence, transfer

of vertically oriented fuel assemblies was chosen. The decision about the loading orientation of the fuel rod canister was more difficult.

Vertical rod-to-canister loading systems require support for each rod during loading to prevent dropping and breaking the rods when the rod bundle is lowered into the canister. This method has been used by Westinghouse at Duke (Reference D-1). Their equipment depended on the friction created between the support system and the outer rods in the bundle. It was expected that friction from the rod-to-rod contact in the bundle would support the interior rods of the bundle. However, during testing, rods dropped from the interior of the bundle, presumably, because minor differences in diameters of the rods prevented effective contact.

Conversely, the canister could be lowered over the rod bundle in the vertical axis. No designers of prototypical equipment have yet built or tested such a system; however, this method would simplify the problem of the support for each rod.

Horizontal canister loading has the following advantages.

- It reduces both the potential for and distance of any possible fuel-rod drop.

- It uses proven mechanical methods that are independent of differences in LWR fuel assembly designs.

- It provides flexibility in varying the number of sectors per canister.

Loading pulled fuel rods in a horizontal canister has been selected to minimize the potential for cladding breakage. The ability to process different LWR fuel assembly designs and the canister flexibility reinforce this choice.

Fuel in canisters may be handled in either a vertical or horizontal orientation. However, application of demonstrated technology for lid welding, in-process storage, loading the canisters for transport, and transfer before emplacement represents a distinct advantage for vertical orientation. Therefore, it has been decided to handle the canister in a vertical orientation throughout the remainder of the consolidation process.

The vertical and horizontal orientations were evaluated for packaging nonfuel components. This evaluation is not concerned with the integrity of fuel rod cladding but is primarily concerned with contamination confinement. The much smaller working area of a vertical system and the advantage of gravity reduces the difficulty of confining contaminants. A vertical system also matches the orientation of the fuel assembly frame as it is removed from the fuel assembly holder. In this orientation, a nonpowered gravity feed system can be used. A horizontal system would require powered feeding and would increase equipment maintenance requirements. The vertical approach was chosen for these reasons.

Rework is defined as the special processing necessary for recovering nonstandard or off-normal events. Recovery from nonstandard or off-normal events will involve a variety of different requirements that demand flexibility. Therefore, to the extent practical, rework space will be provided for processing items in either the vertical or horizontal orientation.

D-3.0 Vertical Fuel Holding

Design choices for vertical fuel holding systems involve selecting from the universal or specific and the friction or positive devices that are defined below.

Universal devices for this study are defined as devices having the capability to remotely handle multiple fuel designs with little, if any,

required component replacement. This flexibility will normally eliminate set-up operations, increase production, and reduce radiation exposure. However, such a device has not been tested. A disadvantage of using new devices is the risk of unanticipated development costs. Universal devices are not excessively complicated and appear to have little risk for excessive development costs.

Specific devices have features that are opposite those of universal devices. Normally, the specific devices are simpler because they are designed with little or no flexibility. However, where different fuel assembly configurations must be handled, different specific devices will be required for each configuration. Storage area will be required for these devices in the hot cells and will create the need for additional facilities for the devices when not in use. As a result, costs are increased. Each specific device to hold fuel results approximately in a 15-ft-long, 1-ft^2 storage envelope. Also, nonproductive setup time is estimated to be substantially greater for a specific device than for a universal one.

Because no significant safety concerns have been identified in a comparison between these two types of fuel holding devices, this choice has been based on operational considerations. The universal device (reviewed and described in Section 3.1.1) has been chosen because it appears to simplify operations and minimize hot-cell spatial requirements. Its lack of demonstration is not a deterrent because its components incorporate no excessively complicated mechanisms.

The choice between using friction to hold the fuel assembly by its end fitting or positive gripping of the fuel rod spacers involves the following considerations. A resisting force of approximately 10 tons may be needed to hold the fuel assembly when all rods are removed simultaneously. This force would then be divided equally among the fuel rod spacers. The resulting forces may exceed the strength of the attachment that fastens the spacers to the remainder of the fuel assembly frame. Use of friction could, as a result, lead to uncontrolled deformation of

the fuel frame as the spacers are overstressed. This result would of course be unacceptable because in all probability fuel cladding would be damaged.

Friction devices have been used successfully only when a single row (or fewer) of fuel rods is pulled at one time. Therefore, positive mechanical gripping devices have been selected to hold the fuel assembly frame for rod removal; this selection retains the option of pulling all rods simulanteously.

D-4.0 End-Fitting Removal

End-fitting removal methods reviewed before selection of an equipment concept include

- advanced technologies,
- sawing,
- internal cutters, and
- unscrewing.

This review has been necessitated by the variety of mechanical designs for fuel (Appendix F).

The gap between the end fitting and the ends of fuel rods in PWR fuel may vary. Though difficult to implement, some method for gap measurement is necessary if advanced cutting methods are used. Individual fuel rods can shift axially within the fuel assembly during transportation and handling. Because the gap between the end fitting and the end of the fuel rod is the cutting zone for the advanced techniques and sawing, cladding would be jeopardized by a reduced or nonuniform gap. This is particularly true where cutting tolerances are small. By design, no gap exists in BWR fuel rods. The solid end portion of the fuel rod would be cut if these approaches were used, thus jeopardizing the integrity of the cladding. These cladding breakage risks weighed heavily against the selection of advanced cutting or sawing techniques.

Difficulties in confining contamination is also increased by sawing and some advanced cutting methods. Sawing, particularly high-speed cutting (as with friction band sawing and rotary disks), imparts high-speed, multidirectional velocities to the cutting particulates. This sawing would make it more difficult to confine radioactive particles. Some exotic methods that use heat for cutting vaporize materials; such vapors are radioactive. These difficult-to-confine offgases from the cutting process would also spread radioactive contaminants.

Cladding breakage and confinement of contamination have been the bases for rejecting the advanced technologies and sawing techniques in spite of their universality for the different mechanical designs of fuel. As a result of these findings, internal cutters for removing the end fittings of PWR fuel assemblies and unscrewing the end fittings of BWR fuel assemblies appear to be the only viable ways of removal. These approaches are generally specific to a fuel assembly's configuration. However, in an effort to be universal to some degree, a programmable device has been selected to position the end-fitting removal tools. This device would also accommodate excessive fuel mechanical tolerances that can be expected in some spent-fuel assemblies.

D-5.0 Rod Removal

Whether or not all rods should be removed simultaneously was reviewed from the standpoint of throughput followed by a review of the methods to remove the rods. After selecting the method to pull the rods, four specific methods of mechanical attachment necessary to pull the rods were reviewed to complete the design study of rod removal.

Throughput controlled the choice between removing all or a portion of the fuel rods at a time; safety considerations did not differ significantly between the two approaches in a hot-cell environment. As discussed in Appendix G, approximately 5 min are allowed to pull all the fuel rods from an assembly. In existing designs, engaging and pulling

one or more fuel rod takes several minutes. Therefore, throughput requirements dictate that all rods be removed at once.

Three methods for removing all the rods at once have been reviewed. They are

- pulling or pushing the fuel assembly frame with the fuel rods fixed,
- pushing the fuel rods, and
- pulling the fuel rods.

Pulling or pushing the fuel assembly frame was eliminated first because fuel-rod spacers generally lacked a sufficiently rigid attachment to the rest of the frame. These spacers would need to be attached individually to a pulling or pushing device just as the frame would; and making this device movable, rather than using a smaller device that attaches to the fuel rods, appears mechanically undesirable.

The next consideration was whether to pull or push the fuel rods during removal. Two disadvantages to the pushing method are mechanical considerations. First, using existing technology, pushing the fuel rods out would require a mechanism approximately three times the length of a fuel assembly. This length is needed to accommodate the

- fuel assembly frame,
- removed fuel rod, and
- the retracted push rod.

Pulling with existing cable devices can eliminate the last item listed above. The amount of hot-cell spatial area needed for rod removal could be reduced proportionally.

Second, larger hardware components need to be stored with the pushing method than those associated with the pulling method. Either approach requires specific hardware for each fuel type. However, the push rod device is at least ten times longer than the pull rod device.

Proportional increases in requirements for storage for the push devices would result in a larger and more expensive hot cell.

Two methods of attachment for pulling the fuel rods have been reviewed. One method, which for purposes of this study is termed universal, uses an adjustable device that could be attached to multiple rod arrays. The alternative method is one in which the device could only be attached to a single type of fuel array and is referred to as specific. The variety of mechanical designs for spent-fuel discussed in Appendix F favors the specific type of device because of its practicality for equipment designs.

Although universal devices have not been demonstrated, a review of novel concepts generally concluded that such devices would be excessively complex. Therefore, only the following specific devices were considered for pulling fuel rods:

- biters,
- welders,
- clamps, and
- collets.

Biters have been developed and demonstrated, while welding is an approach that has been discussed in the literature. Both provide positive attachment. Biter designs have included pulling force limiters; biter operation, however, results in some cladding distortion. Because cladding damage could conceivably occur, the biter concept has been eliminated.

Welding has also been eliminated because of its potential to damage the cladding. This damage results from heat and the potential to exert excessive pulling force, which might develop if a rod jams during removal. If a welded joint fails to yield except to a large increase in pulling force, the fuel rod, itself, might be severed first. Satisfactory methods of determining the pulling force on a single rod

during simultaneous removal of all rods have not yet been identified or demonstrated. Until such a technique is demonstrated, it is assumed that welding could most likely result in cladding damage.

Clamps and collets depend upon friction and are inherently safer because the coupling can be designed to slip and release before the cladding is overstressed. For this discussion, clamps are defined as having two opposable points or edges for frictional contact and grasping. Collets are defined as having either more contact points or more surface area of contact. Based on this definition, collets have been chosen because they minimize the puller-cladding contact stress and have been successfully demonstrated in operations involving irradiated fuel.

D-6.0 Rod Rearraying

The primary choice in fuel-rod rearraying equipment was between universal and specific methods. Rearraying is defined as the process of changing from the square and spaced arrangement of the rods in a fuel assembly to the closely packed bundle of rods in a canister.

Specific rearraying requires separate and different devices for each fuel assembly configuration. Consequently, these devices increase the spatial requirements for storage of contaminated equipment. Current devices that have been conceptually designed for specific rearraying are based on the idea of channeling individual rods through separate, curved guide tubes. When jamming occurs, recovery is a problem because access to the interior of the guide tubes is very difficult. Currently, cladding stresses are minimized by providing the guide tubes with a large radius of curvature, but the potential for cladding damage is not eliminated by selection of this method.

The devices designed to handle all LWR arrays are simple pieces of equipment that will be referred to as universal devices and the methods that use these devices as universal methods. Cladding stresses also

occur in this type of processing but do not appear to vary significantly from those created by equipment designed for singular use, that is, specific methods.

Because safety considerations do not differ significantly, the universal method has been chosen partially based on its simpler mechanical design. Additional advantages are ease of operation and a decrease in hot-cell storage space. The ease of operation includes better access during recovery from off-normal conditions, such as jammed fuel-rods. Decreased storage space for contaminated equipment results in the need for decreased hot-cell space. The disadvantage of the small increase in the volume of consolidated waste is considered secondary to the flexibility in processing multiple types of fuel assemblies with a minimum of equipment.

D-7.0 Canister Loading

The first design choice was between using friction or positive force to load the canister. Friction loads rods into a canister by pressing powered rollers against the perimeter of the fuel-rod bundle (Reference D-1). Typically, gravity assists the roller action.

Positive force can push the bundle into the canister with or without the assistance of gravity. Stress on the cladding is minimized by this method because the force is shared by all of the rods when the ends are pushed. The contact point of the rollers in the frictional method can develop higher stresses because fewer rods must transmit the same force. However, when the bundle is pushed into the canister horizontally, gravity is not used. Therefore, positive force has been chosen because it minimizes cladding stress and implements horizontal canister loading.

Another decision about loading the canister was whether to move the canister onto the fuel-rod bundle or the fuel-rod bundle into the canister. Moving the canister instead of the bundle reduces handling and inherently minimizes cladding damage. This method, however, appears to

require multiple devices that clamp and shape the bundle before the canister moves over it. To prevent mechanical interference, these devices would have to be moved out of the way in sequence as the canister traverses the length of the bundle. To offset the mechanical complexities of such a device, a limited number of clamps placed at appropriate distances could be used. However, the points of contact between the clamps and the cladding of perimeter rods of the fuel-rod bundle will result in points of concentrated stress to the cladding. Thus, moving the canister was rejected because of mechanical complexity and potential cladding damage. Instead, the method where the rod bundle is pushed into the canister has been chosen.

D-8.0 Waste Volume Reduction

Various approaches to reduce the volume of waste from fuel assembly frames include

- sawing,
- shredding,
- thermal cutting,
- shearing,
- compacting, and
- melting.

The objective is to reduce the length of the fuel assembly frame and to reduce the volume of the resulting pieces.

Sawing, shredding, and thermal cutting have been eliminated as alternatives because of the need to confine contaminants that would result from these operations and to minimize the fire hazards associated with Zircaloy. Designing contamination confinement facilities for the area between the feed and cutting chambers appears to be more difficult for these methods than for shearing operations. The contamination confinement difficulties parallel those discussed earlier in this appendix with end-fitting removal alternatives.

The confinement difficulties create a related problem of Zircaloy fires. The potential for Zircaloy fires is increased as smaller fines accumulate. Shearing can be designed to control the size and accumulation of particles.

With the cutting tolerance much larger than in the end-fitting removal operation, waste packaging can be implemented simply with a shear. The shear device can be designed to confine cutting debris to the shearing chamber. Having the shear device feed its product of shortened fuel frame sections into an adjacent press, significantly reduces the compaction stroke requirements of the press. Duke Power Co. at the Oconee power station has reduced the waste volume by at least a 6:1 ratio with similar equipment (Reference D-1). Other data in Reference D-1 indicate that a compaction ratio of 10:1 could be expected from similar equipment.

The memory expansion of the fuel-rod spacers after compaction might adversely affect volume reduction. If this occurs, shredding could offer an attractive alternative assuming Zircaloy fires and contamination concerns can be adequately delt with.

A melter could receive the sheared product and completely eliminate void space. The melter would require development work but could offer volume reductions approaching a ratio of 50:1. Offgas, utilities, operation, maintenance, and fire prevention requirements, however, would be considerably greater than with existing compaction or shredding methods.

A shear/compactor device appears to be the best choice for reducing waste volume. Reductions of 10:1 appear acceptable pending further development of shredders and melters.

D-9.0 Rework

Rework is defined as recovery of radioactive material from an off-normal event. Four specific off-normal conditions have been identified as requiring rework:

- a fuel rod jammed in the fuel assembly frame,
- fuel rods broken during processing,
- a fuel-rod bundle jammed before being fully loaded into a canister, and
- a canister with a rejected lid weld.

When determining an approach to rework activities, the following must be considered.

- Rework increases the potential for cladding breakage.
- Rework may be required at any point in the process from fuel-assembly delivery to canister inspection.
- Radiation from spent fuel will generally be a factor.
- Rework activities may require viewing the operations through shielding windows.

The design choice was between in-place or off-line recovery. Performing these activities in an off-line rework area would control contamination and minimize throughput interference.

It appears that the expense of a separate rework area could be offset by capital and operational savings; therefore, a separate rework area is favored.

D-10.0 Hot-Cell Operations

Several design choices have been made regarding hot-cell operations and maintenance. Essentially, the first choice, which affects the project scope, is that a hot cell with duplicate process systems rather than a canyon or a pool be used to confine radiation and shield workers.

Several hot-cell concepts have been reviewed including equipment drives, operator process surveillance, and operator maintenance surveillance. The equipment drive review includes in-cell, remotely handled replaceable drives; and through-the-wall shafts and piping with drives in the nonradioactive area or beyond the cold side of the shielding wall.

The latter option was selected because the technology is more compatible with as low as reasonably achievable radioactive exposure requirements. Remotely handled replaceable drives generally result in higher anticipated operator dose exposure than maintenance of cold-side drives. Also, the radiation degradation of the in-cell drives is less compatible with the 30-yr facility design lifetime than cold-side units.

The choice was made between whether the operator would be stationed in an aisle adjacent to the hot cell or in a remote-control room to control and observe the process. Stationing the operator in a control room requires remote process monitoring through television, process status instrumentation, and remote automated mechanical equipment that can be positioned accurately. This remote operation from a control room lowers operator exposure to penetrating radiation and offers construction savings because higher radiation levels are acceptable in areas adjacent to the hot cells. In addition, the automated control systems are believed to offer the additional saving of a higher throughput than manually controlled systems. For these reasons, the remote-control room approach was chosen.

Economic advantages also result from reducing the shielding of the cell walls that are only sized for maintenance activities, when the remote-control room approach is selected. Before these maintenance activities, radiation can be significantly reduced by remotely removing the source (spent fuel) from the cell. Even when infrequent equipment failure occurs and remotely directed fuel removal is prevented, aisle-directed fuel removal would be of limited duration, and supplemental shielding could be used.

The foregoing maintenance approach has been tentatively selected. This choice is expected to result in facility capital-cost savings.

D-11.0 Safety

The fuel-consolidation system has been designed for criticality safety. Unmoderated uranium enriched to less than 5-wt% U-235 has a K-infinity less than unity (Reference D-2). Therefore, it was decided that the fuel consolidation system would be designed without the introduction of materials that would significantly increase the moderation. Hydrogenous liquids (such as water and hydraulic fluids), for example, are eliminated in the consolidation equipment. Hydrogenous solids (such as wiring insulation) are restricted to those that cannot otherwise be eliminated in essential commercial components.

Radioactive gaseous releases are not totally preventable because they can occur during off-normal conditions. Even if all process parameters are controlled within their specified operational ranges, some inadvertent cladding breakage must be anticipated because the condition of the cladding received is not governed by repository waste acceptance criteria. Minor variations in manufacturing, burn-up, handling, and storage histories will result in varying resistances to breakage, even for cladding with identical manufacturing specifications. Cladding with incipient failures will not be identifiable upon receipt. Cladding breaks, even a pin hole or small crack, can vent the fuel rod's inventory of fission gases.

D-12.0 Safeguards

Techniques to prevent diversion of special nuclear material involve applying generally accepted methods for safeguarding fuel rods and monitoring the waste-disposal route. These methods will involve a documentation review that is verifiable with in-cell, tamper-proof video monitoring records.

The documentation review will require the signature of two operations employees. As special nuclear material progresses through all steps of the process (from fuel assembly receipt to in-process storage of rod canisters), the documentation will be updated, verified, and signed-off by at least two qualified people.

In-cell verification will involve photographing the canister, including a view showing the fuel rods, canister identification numbers, and the time and date. Other photographs will document lid weld patterns and canister weight.

The waste container transport route will be monitored by a neutron detector to prevent diversion of fuel. Unauthorized diversion of nuclear material by means of other hot-cell penetrations will be prevented by standard monitoring and surveillance techniques.

D-13.0 Decommissioning

The design for decommissioning the repository involves selecting various features that aid decontaminating and decommissioning the facility at the end of its design lifetime. These features include

- stainless steel cell liners;
- equipment that is removable by remote-handling from floor/wall locating pins;
- equipment designed with sufficiently small modules to allow passage through cell openings;
- elimination of hot-cell pits that tend to trap contaminants (pits can be used, however, to reduce hot-cell volume requirements if the effects of contaminant trapping can be mitigated by other systems); and
- installation of decontamination piping and spray devices.

REFERENCES

D-1. "Spent Fuel Consolidation Demonstration," Duke Power Company/ Westinghouse Electric Corporation, September 30, 1983.

D-2. "Design Criteria for an Independent Spent Fuel Storage Installation (Dry Storage Types)," ANSI/ANS-57.9, American Society, 1984.

APPENDIX E

CONSOLIDATION DESIGN SURVEY

APPENDIX E

CONSOLIDATION DESIGN SURVEY

Those designer/developers that were considered in the survey of consolidation processes and equipment include

- Allied-General Nuclear Services (AGNS),
- Combustion Engineering (CE),
- DWK (Germany),
- Nuclear Assurance Corporation (NAC),
- United States Tool and Die (UST&D), and
- Westinghouse (WEST).

A matrix of designers versus consolidation design considerations and the options selected by the designers is shown in Figure E-1. The consolidation design survey included process orientation, environment, fuel-holding methods, end-fitting removal methods, rod pulling methods, rod rearraying methods, and remote-handling operations and maintenance methods.

The specifics listed in the remarks column (Figure E-1) are amplified below.

AGNS A square-can system was developed for away-from-reactor application and a round can approach was developed for repository application.

CE The system referenced was designed in the fall of 1983. Shop testing of the mockup of the rearraying device has begun, but no results have yet been reported. The system is intended for use by Northeast Utilities.

DWK This system is the one used in the Karlsruhe reprocessing facility. It was reviewed based on photographs of the equipment without the benefit of accompanying discussions. Rods are reprocessed, not consolidated, but the disassembly aspects of the operation are pertinent to this survey.

NAC BWR and PWR wet system prototypes were demonstrated for reactor and away-from-reactor applications.

UST&D Demonstration of this system was witnessed by G. A. Townes and centered on development of its "transition section" (i.e., the rearraying device). The system framework was also minimized to facilitate pool installation and removal.

WEST The system referenced was developed for Duke Power Company and was demonstrated at the Oconee Nuclear Station. All the rods from a B&W 15 x 15 fuel assembly were pulled simultaneously.

DESIGNER	ORIENTATION HORIZONTAL-H VERTICAL-V	ENVIRONMENT WET-W DRY-D	FUEL-HOLDING UNIVERSAL-U SPECIFIC-S FRICTION-F POSITIVE-P	END REMOVAL SAW-S INTERNAL CUTTER-IC UNSCREWING-US	ROD PULLING MAX. NO./PULL-XXX COLLET-C WELD-W BITER-B CLAMP-CL	ROD REARRAYING UNIVERSAL-U SPECIFIC-S	REMOTE OPS/ MAINTENANCE SHIELDED MANUAL-SM MASTER SLAVE-MS	REMARKS
AGNS	H	D	U/P	S	17/B	U	MS	SQUARE AND ROUND CAN OPTIONS
CE	V	W	*	IC	14/CL	S	SM	DESIGN ONLY TRANSITION MOCKUP TESTING CURRENTLY
DWK	H	D	S/F	S	6/CL	**	MS	KARLSRUNE REPROCESSING HEAD END
NAC	V	W	U/F	S/IC/US	6/C	U/S	SM	BWR AND PWR WET SYSTEMS 2:1
UST & D	V	W	S/P	IC/US	264/W	S	SM	DEVELOPMENT CENTERED ON TRANSITION SECTION AND FRAME (BWR)
WEST	V	W	S/P	IC	208/C	S	SM	B & W FUEL SPECIFIC TOTAL ASSEMBLY ROD PULLING

* DESIGN NOT FIXED
** NOT APPLICABLE

Figure E-1. Fuel Consolidation State-of-the-Art Survey

The first two design considerations are

- process orientation and the
- methodology for radiation shielding and confinement.

Only two different combinations from among many possibilities have been selected by the designers surveyed. The selections are either to combine a horizontal orientation for operations with remote handling and dry processing in a hot cell or to combine vertical processing using wet pool methods. AGNS and DWK selected the horizontal orientation hot cell technique; the rest of the consolidation designers selected the vertical orientation/wet pool method.

These selections have been made in order to achieve different objectives and to accommodate different installation environments that were available to the specific designer. Typically, the horizontal/hot cell technique has been used where a variety of fuel types are processed and where the facility environment favors the horizontal orientation. The vertical/pool technique has been selected where the fuel type is fixed, the available pool space is adjacent to the fuel storage, the throughput is comparatively low, and remote-handling cell installation would entail an unjustifiable increase in capital costs and licensing requirements.

Four fuel-holding methods used by the designers are the

- universal,[a]
- specific,[b]
- friction, and
- positive.

---

a. Universal--All components necessary to process the variety of LWR fuels are in place even though some remotely handled adjustments may be necessary before processing a specific type of fuel.
b. Specific--Components must be interchanged using a remotely handled maintenance setup procedure before processing a specific type of fuel.

The universal fuel-holding method is applicable to any fuel design. It generally involves a pressure actuated clamp that holds the fuel by the friction developed between the clamp and the end fitting and/or the fuel rod spacers. NAC used a universal method that is based on friction. UST&D used pressure actuated clamps provided with a mechanical step for grasping the outer strap of the fuel-rod spacer. This required some repositioning to match the axial position of the spacer. AGNS used a pressure-actuated clamp but developed positive holding between the clamp and fuel frame. Spring pins on the clamp faces are spaced so that movement of the fuel frame is restricted by mechanical interference with these pins. The pins are continuous and arranged so that the fuel-rod spacer positions do not have to be fixed. The DWK approach appeared to use specific clamps that encircle a particular type of fuel assembly and hold it by the frictional force between the clamp and assembly.

WEST used a specific approach with grid restraints and a clamp at the lower end fitting. Projections on the restraints matched the specific fuel array being processed, fitting within the gaps between fuel rods.

End-fitting removal methods involve severing metal (except for BWR fuel). NAC is the only designer reviewed that has demonstrated complete equipment for consolidating BWR fuel. The BWR equipment involves unscrewing nuts to free the end fitting. Other designers have described but have not demonstrated their BWR methods that generally involve unscrewing.

NAC has demonstrated sawing PWR fuel assembly frames with a hydraulically driven abrasive disk that cuts the control rod guide tubes just below the end fitting and above the fuel rods. CE, NAC, UST&D, and WEST cut the guide tubes with internal tube cutters in the same general area between the end fitting and fuel rod tips.

AGNS and DWK cut the guide tubes with hacksaws. AGNS has chosen the hacksaw as a universal PWR system to sever guide tubes, after considering

more advanced technologies, such as laser, plasma arc, and friction band sawing. AGNS has not selected any of the advanced technologies because of the anticipated development work that would be necessary for adapting them to the disassembly process. Commercial hacksaws, or at least their components, have been shown to be readily adaptable for remote-handling operations.

NAC and WEST used a collet attachment to pull the rods. WEST pulled several hundred rods simultaneously, and NAC pulled up to six rods at one time. The other designers have used unique methods, such as (1) a double toothed device that bites into the fuel rod end plug (AGNS), (2) a clamp that grips multiple rod ends (CE and DWK), and (3) a welding system that attaches pulling wires to the end plugs (UST&D). Here too, the number of rods being pulled during a single operation varied. AGNS pulls 1 rod at a time, CE up to 14 rods at a time, DWK 6 rods at a time, and UST&D all the rods simultaneously.

Both universal and specific equipment approaches have been developed by the designers to rearrange the fuel rods from a square fuel assembly array to a rectangular, circular, or some other nonsquare configuration required by the consolidation system. Universal methods take fuel rods from any type of assembly, change the configuration, and then load them into the canister. Specific methods typically require a different transition (rearraying) device for each dissimilar array of PWR or BWR fuel. Each fuel rod (either during rod removal or during canister loading) is guided from its square array position to its specified consolidated array position. These specific approaches generally use shaped tubing to guide a rod to its designated location.

CE, UST&D, and WEST use a transition device to rearrange the fuel rods with a single fuel design. NAC provides specific rearraying but accomplishes it by the over-the-pool operator manually positioning six or fewer rods into a canister with grids. NAC has used a guiding device (if more than one rod is loaded at a time), and canisters with grids are used with each different fuel design.

AGNS and NAC both developed variations of universal rearraying. AGNS uses a shaping chamber to form the pulled fuel rods into the cross section that matches the canister sector. The required cross section is formed by rods as they collect in the chamber without the constraint of positioning a specific rod in a specific location. Access to the chamber is gained through a hinged or movable plate (length equal to a fuel rod) on one edge of the chamber. The rods enter the chamber with the plate open. After loading and closing the chamber, a pusher advances and pushes the rods from one end of the chamber into the canister sector at the other end of the chamber. Vibration devices facilitate both rod settling and rod pushing.

NAC has the over-the-pool operator place the six or fewer fuel rods (pulled at one time) into a sloped canister held several degrees from vertical. This causes the canister to fill from the lower portion first without the need for gridding. In a completely vertical system, gridding holds the first rods loaded, clear of the last rods loaded.

There are two remote operations/maintenance approaches selected by the designers surveyed. One is based on manual methods using water to shield the pool-side operations from the spent fuel radiation source. The other is based on operator control of mechanical slave devices (i.e., overhead manipulators, hot-cell cranes, or wall-mounted manipulators) with solid, fixed shielding for spent-fuel radiation. The shielded manual approach in a pool has been selected by CE, NAC, UST&D, and WEST. The master slave approach in a hot cell has been selected by DWK and AGNS. Each selection was considered practical for its intended use.

APPENDIX F

REACTOR FUEL DESIGNS

APPENDIX F

REACTOR FUEL DESIGNS

Reactor fuel designs have evolved significantly through the years as a result of extensive operating experience. Variations in materials, size, and number of fuel rods per assembly have been the major changes. Most fuel-rod cladding is now Zircaloy-4. However, some early fuels had 304 stainless-steel or Zircaloy-2 cladding. Experience with fuel-rod elongation resulting from irradiation led to modifications in fuel-assembly length and/or changes in the end fittings. Also, there is a trend to reduce the diameter and increase the number of rods in each assembly.

There are more than a dozen fuel assembly designs found in the spent-fuel inventory. Table F-1 lists the inventory of spent-fuel assemblies that have been considered in this study.

At first glance it may appear that assemblies can be grouped by array size to reduce the number of different fixtures required to pull the fuel rods. This is not the case because of the dimensional differences shown in Table F-2.

Also, BWR and PWR assemblies are constructed differently. BWR fuel assemblies have screwed connectors to hold the end fittings in place. PWR assembly end fittings are generally swaged or welded in place. Different methods of attaching end fittings require different methods to remove these end fittings.

TABLE F-1

ESTIMATED INVENTORY OF SPENT-FUEL ASSEMBLIES BY 1990

Manufacturer	Array Size	Number of Fuel Assemblies[a]	Percent
Westinghouse	17 x 17	22,800	28.1
GE[b]	7 x 7	17,700	21.8
Westinghouse	15 x 15	9,700	12.0
B & W[c]	15 x 15	7,100	8.8
Combustion Engineering	16 x 16	7,100	8.8
Combustion Engineering	14 x 14	6,200	7.7
B & W	17 x 17	4,000	4.9
Westinghouse	14 x 14	3,400	4.2
GE	6 x 6	900	1.1
Combustion Engineering	15 x 15	700	0.9
GE	11 x 11	600	0.7
Westinghouse	11 x 11	500	0.6
B & W	14 x 14	300	0.4
TOTAL		81,000	100.0

a. All information is from Reference F-1, estimating cumulative discharges as of 1990.
b. General Electric.
c. Babcock & Wilcox.

TABLE F-2

DIMENSIONS OF SELECTED LWR FUEL ASSEMBLIES (in.)

Array Size	Manufacturer	Rod Spacing	Rod Diameter	Fuel Oxide Length	Rod Length	Fuel Assembly Length
7 x 7	GE[a]	0.738	0.570	144	158.1	171.1
7 x 7	GE	0.738	0.563	144	162.8	175.9
14 x 14	Combustion Engineering	0.580	0.440	128	136.3	158.2
14 x 14	Combustion Engineering	0.580	0.440	137	147.2	167.8
14 x 14	Combustion Engineering	0.580	0.440	150	161.0	182.5
14 x 14	Westinghouse	0.556	0.422	120	126.7	137.1
15 x 15	Westinghouse	0.563	0.422	144	151.8	158.8
15 x 15	Westinghouse	0.563	0.422	144	152.4	158.8
15 x 15	B & W[b]	0.568	0.430	144	153.0	165.6
15 x 15	Combustion Engineering	0.550	0.413	132	140.3	149.1
16 x 16	Combustion Engineering	0.506	0.382	150	161.6	178.8
17 x 17	Westinghouse	0.497	0.374	144	151.6	158.8
17 x 17	Westinghouse	0.497	0.374	144	152.3	158.8
17 x 17	B & W	0.501	0.379	143	153.0	165.7

a. General Electric.
b. Babcock and Wilcox.

REFERENCE

F-1. Viebrock, J. M., "Alternatives for Water Basin Spent Fuel Storage," Executive Summary, Part 1, SRO (Savannah River Operations)-1051-1, NAC (Nuclear Assurance Corporation)-C-7915, September 1979.

APPENDIX G

THROUGHPUT

APPENDIX G

THROUGHPUT

Throughput is a major consideration of the conceptual design. The pertinent design requirements are

- 5,116 fuel assemblies/yr and
- 3,000 productive hr/yr
  (i.e., 250 days/yr x 2 shifts/day x 6 productive hr/shift).

Assuming PWR and BWR fuels require similar periods of time for consolidation processing (Table G-1 estimates the minimum time required as 0.5 hr), the throughput to meet pertinent design requirements permits a maximum of 0.6 hr to process each LWR assembly. Processing an assembly every 0.5 hr results in an excess throughput of about 15% (6,000 fuel assemblies total). PWR and BWR processing time estimates can be assumed to be similar because

- fuel assembly loading times are similar,
- end-fitting removal times are similar,
- the rod-pulling times are similar,
- times to handle fuel rods and nonfuel components for packaging are similar, and
- fuel rod and nonfuel component packaging times do not affect processing times.

The fuel assembly loading and rod pulling time is primarily a function of fuel-rod length. Because the active length (part containing the pellets) of about 95% of all LWR fuel varies less than 5%, processing times to load fuel and to pull all rods simultaneously are proportionally similar for PWR or BWR spent fuel. The time required for depositing fuel rods in the trough and for removing the nonfuel components are likewise similar for all fuel assemblies.

TABLE G-1

TIME ESTIMATES FOR INDIVIDUAL STEPS IN CONSOLIDATION OPERATIONS

Operation	Minutes per Fuel Assembly
1. Load fuel in holder.	5
2. Remove PWR/BWR end fitting and release BWR tie rods.	10
3. Pull all rods from fuel assembly.	4
4. Load pulled rods into rod collector.	4
5. Rotate rod collector to fill loading trough.	2
6. Remove nonfuel bearing components.	5
TOTAL TIME	30

Production Rate = 720 production min/day x 250 production days/yr divided by 30 production min/LWR fuel assembly.

Production Rate = 6,000

Fuel rods and nonfuel bearing components will be loaded and packaged by systems independent of the disassembly equipment. These packaging tasks do not affect consolidation time provided they are completed by the time the next batch of fuel rods and nonfuel components must be processed. Initial estimates, discussed in Section 3.3, indicate that the packaging systems do not impact consolidation time.

End-fitting removal times are estimated to be similar for all LWR fuel. A review of LWR fuel variations by type and vendor and the relative quantities of each are provided in Appendix F. A few additional points, however, will be emphasized here.

- With very minor exceptions, Westinghouse and Babcock & Wilcox PWR designs contain 16, 20 (note that this is the median discussed in the next point), or 24 control rod guide tubes per assembly (the greater the number, the smaller the diameter of each tube).

- Combustion Engineering PWR designs typically have only five control rod guide tubes (one-fourth of the average for Babcock & Wilcox). The diameter of the guide tube and thickness of the wall are approximately twice those of Babcock & Wilcox and Westinghouse designs.

- Thus, the area of material to be cut in all PWRs is approximately the same as explained below.

The total material to be cut (M) is expressed as

$$M = N \times D \times W$$

where

M = total metal cross section to be cut
N = number of guide tubes
D = outside diameter of guide tube
W = wall thickness of guide tube

Using the above formula, recalling the points emphasized just above, and letting lower case N, D, and W equal those of the median Babcock & Wilcox and Westinghouse design, following are the results:

Babcock & Wilcox and Westinghouse	Combustion Engineering
N = n	= 1/4n
D = d	= 2d
W = w	= 2w
M = ndw	= ndw

It can be seen from the above results that a Babcock & Wilcox and Westinghouse PWR end-fitting removal, as defined by the material to be cut, approximately equals that of the less numerous but larger and thicker guide tubes of a Combustion Engineering PWR. Therefore, PWR end-fitting removal times are expected to be similar.

The estimated similarity between removal times of BWR and PWR end fittings is based on the number of operations, not the material to be cut. BWR end fittings are removed by unscrewing rather than cutting. The eight tie rods hold the top end fitting with eight nuts and the bottom end fitting with bottom threaded ends. Therefore, 16 rotary disassembly operations for the BWR top and bottom end fittings are compared to the median Westinghouse and Babcock & Wilcox 20 rotary cutting operations. In addition, the BWR tie-rod nut locking tabs for the upper end fitting must be released and the fuel spacer capture rod rotated 45° to permit disassembly. These extra BWR operations increase the time of the 16 BWR rotary operations. This, at least in initial estimates, indicates that a similarity between end-fitting removal times exists for PWRs and BWRs.

APPENDIX H

EQUIPMENT FAILURE MECHANISM

APPENDIX H

EQUIPMENT FAILURE MECHANISM

Expected equipment failure rates and causes (on a multiannual basis for consolidation equipment) were reviewed. Causes of equipment failure in a hot cell could include corrosion, creep, fracture, fatigue, wear, and radiation degradation.

Corrosion, creep, and fracture failure of consolidation system equipment is not probable because the environment, which is dry, essentially dustless, and maintains a constant air temperature (about 100°F), does not provide the conditions necessary for these failures to occur. Corrosive agents are not introduced in processing operations. Creep is unlikely at temperatures as low as 100°F. Fracture is unlikely at temperatures as high as 100°F. Therefore, the equipment should not require the periodic maintenance that would result from these failure mechanisms.

Fatigue failures are also improbable because the consolidation equipment does not operate for the million or so cycles when fatigue becomes a consideration. Most pieces of equipment cycle one time or less per assembly. Each of the parallel process lines should be used equally and process about 80,000 assemblies (2,558 assemblies/yr x 30-yr design lifetime = 76,740 assemblies). Even the cranes and the waste volume reduction shear equipment, which operate in multiple cycles (the crane less than 5 and the shear less than 10 cycles/assembly), do not complete enough cycles to cause concern. The improbability of equipment failure is also ensured by normal design practices that result in working stresses below the fatigue limits.

At this stage of the design, wear is a concern in three devices--the cutting tool to remove the PWR end fitting, the volume-reduction shear blade, and the lid welder tip. These devices will be replaced, however, in days or weeks rather than years, at a relatively low cost. They will, therefore, be treated as consumables and be considered in that section.

Radiation degradation is a concern particularly for electrical equipment and other components containing organic materials. Organic materials, such as lubricants, can be avoided in the detail design with inorganic substitutes that do not degrade functionally. However, electrical and pneumatic items that generally have organic materials are required in the hot cells.

Radiation exposure to equipment resulting from a fuel assembly in the consolidation cell can be expected to be approximately 1,600 roentgen/hr (accounting for the average presence of PWR and BWR fuel during the year) and conservatively (no credit for self shielding) about 16,000 roentgen/hr for a loaded fuel canister in the canister loading cell (Reference H-1, pp. 2-1 to 2-3; Reference H-2, pp. 2-2 to 2-8). These exposures would be expected for spent fuel having the spectra provided in Tables H-1 to H-4. Assuming that the parallel process lines will be used equally in a year (i.e., 14 hr/day for 125 days) and assuming that a hundred million rads of absorbed dose is the threshold value for organic material damage, radiation degradation of selected equipment can be expected after 30 yr in the consolidation cell and after 3 yr in the canister loading cell.

The effects of distance and shielding on components have not been included in the above discussion. For example, several inches of structural steel shielding could reduce the dose to a component by a factor of 10. The dose to a component would not include a decrease in exposure with increasing distance, nor would it include an increase from multiple sources. Nevertheless, it is believed that a factor of 10 may be applied to the expected lifetime of equipment to account for shielding and distance considerations. This indicates that replacement, required as a result of radiation degradation during the 30-yr facility design lifetime, is not expected in the consolidation cells but could be expected in the canister-loading cells toward the end of the design life.

TABLE H-1

GAMMA-RAY INTENSITY FROM 10-YR-OLD BWR CONSOLIDATED FUEL

Gamma Energy (Mev)	Gamma-Ray Intensity (photons/sec/bundle)
9.5	2.394E + 05
7.0	2.084E + 06
5.0	1.809E + 07
3.5	1.427E + 09
2.75	1.140E + 10
2.25	1.684E + 11
1.75	8.082E + 12
1.25	4.129E + 14
0.85	6.439E + 14
0.575	8.878E + 15
0.375	2.477E + 14
0.225	5.017E + 14
0.125	5.629E + 14
0.085	6.161E + 14
0.0575	1.040E + 15
0.0375	1.339E + 15
0.025	1.122E + 15
0.01	5.155E + 15

TABLE H-2

NEUTRON INTENSITY FROM 10-YR-OLD BWR CONSOLIDATED FUEL

Source	Neutron Intensity (neutrons/sec/bundle)	Neutron Energy (Mev)
(α,n) reaction	1.587E + 07	4 - 5
Spontaneous fission	4.019E + 08	1 - 2

TABLE H-3

GAMMA-RAY INTENSITY FROM 10-YR-OLD PWR CONSOLIDATED FUEL

Gamma Energy (Mev)	Gamma-Ray Intensity (photons/sec/bundle)
9.5	2.869E + 05
7.0	2.498E + 06
5.0	2.167E + 07
3.5	1.637E + 09
2.75	1.324E + 10
2.25	2.014E + 11
1.75	8.448E + 12
1.25	3.802E + 14
0.85	7.212E + 14
0.575	9.030E + 15
0.375	2.506E + 14
0.225	5.112E + 14
0.125	5.782E + 14
0.085	6.162E + 14
0.0575	1.050E + 15
0.0375	1.359E + 15
0.025	1.136E + 15
0.01	5.239E + 15

TABLE H-4

NEUTRON INTENSITY FROM 10-YR-OLD PWR CONSOLIDATED FUEL

Source	Neutron Intensity (neutrons/sec/bundle)	Neutron Energy (Mev)
(α,n) reaction	3.994E + 07	4 - 5
Spontaneous fission	4.909E + 08	1 - 2

REFERENCES

H-1. Dennis, A. W., P. D. O'Brien, R. Mulkin, and J. C. Frostenson, "NNWSI Repository Operational Procedures for Receiving, Packaging, Emplacing, and Retrieving High-Level and Transuranic Waste," Sandia National Laboratories, Albuquerque, NM, SAND83-1166, May 1984.

H-2. Dennis, A. W., J. C. Frostenson, and K. J. Hong, "NNWSI Repository Worker Radiation Exposure, Volume 1, Spent Fuel and High-level Waste Operations in a Geologic Repository in Tuff," Sandia National Laboratories, Albuquerque, NM, SAND83-7436/1, May 1984.

APPENDIX I

SCOPE OF DEVELOPMENT PROGRAM

APPENDIX I

SCOPE OF DEVELOPMENT PROGRAM

I-1.0 Task 1: Detail Design

The primary objective of this task is to generate the fabrication drawings and supporting documentation for equipment that will efficiently, safely, and reliably consolidate spent fuel in compliance with NNWSI project requirements. The detailed development program plan and designs for prototype hardware and software are included. Details of remote-handling operations are included, to a limited degree. Details of at least one of each type of remotely-controlled maintenance equipment are included in the scope and cost estimates of the development program to verify the viability of its concept. Standard equipment is used in subsequent applications, however, to reduce the potential costs. The use of standard equipment is sufficient for demonstrating the viability of remote-handling operations and eliminates the cost of duplicating its installation in subsequent applications. Additionally, a limited quality assurance/control program and the elimination of special radiation resistance components reduce potential costs. This detail design includes the following five major elements:

- detailed prototype engineering;
- shop fabrication drawing preparation;
- procurement specification preparation;
- identification of licensing analysis requirements; and
- preparation of preliminary safety, environmental, and design documentation.

It is assumed that safety and environmental efforts will include a preliminary safety evaluation. This evaluation will prepare the equipment portions of a preliminary safety analysis report suitable for licensing application and will address the safety of both the public and operating personnel.

The safety and environmental evaluation will include an assessment of the design measures for monitoring special nuclear material (SNM) and compliance with the requirements for accountability. The equipment will be reviewed for compliance with applicable guidelines that specify SNM accountability.

I-2.0 Task 2: Procurement

This task involves obtaining equipment and delivering the hardware to the demonstration site. The task is begun following either resolution of anticipated licensing issues or a sufficient portion thereof to ensure that the equipment design complies with the requirements for licensing.

This task uses the documentation produced by Task 1 and includes the bid request, bid evaluation, contract award, fabrication inspection, acceptance testing, and delivery. Construction of this prototypical equipment will probably identify manufacturing problems that require resolution; therefore, technical support is included and during procurement should result in design improvement during fabrication.

I-3.0 Task 3: Demonstration Testing

The objective of this task is to verify the operating efficiency and safety features of prototypical equipment that may be used to consolidate spent-fuel. The equipment can be tested at either a test facility or at the repository if construction is sufficiently advanced. For this estimate, it has been assumed that verification testing is performed at a test facility.

Detailed testing and operating procedures will be prepared to ensure proper test scope, sequencing, and data evaluation. These procedures will specify manpower and support system requirements. Reports will evaluate equipment performance.

Demonstration includes equipment installation, component testing, fuel-scale testing, dummy fuel-assembly testing with multiple fuel designs, and repeatability testing to verify throughput and reliability. If the equipment performs inadequately it will be tested and modified until it performs acceptably. Modification and retesting will be provided with contingency allowances.

Leasing and refurbishing the test facility is included in the scope of this task. The leased facility will have to be refurbished in order to perform remotely handled maintenance and test and evaluate the remote-control room. It must have operations equipment (i.e., cranes, bridges, and floor-mounted manipulators and devices for remote viewing). The remote-control room operating method has been the basis for the conceptual design.

APPENDIX J

THE STUDY OF OFF-NORMAL CONDITIONS

APPENDIX J

THE STUDY OF OFF-NORMAL CONDITIONS

J-1.0 Design Bases

The consolidation equipment design bases, previously defined in Appendix C, were developed for normal or routine processing. The study of off-normal conditions has generated additional bases that are included in this appendix, and together with the previously defined design bases, will ensure an adequate consolidation system for both routine and off-normal events.

In addition to information about normal processing design bases is information related to

- spent fuel,
- canisters,
- throughput capacity of the facility,
- contamination control,
- nonfuel component disposal,
- equipment malfunctions,
- safe shutdown, and
- catastrophic occurrences.

Fuel-related design bases that address unconsolidated fuel assemblies, broken fuel cladding, radioactive decay heat, and fuel cladding inspection have been supplemented.

The consolidation equipment will process most light water reactor (LWR) fuel assemblies. The decision to process any one of several individual types of fuel assemblies will be based on cost effectiveness. Consolidating a fuel assembly that is different from those normally handled could require additional hardware and excessive processing time or could compromise throughput. These additional expenses may not be

adequately offset by the savings associated with consolidating the different fuel assembly. The repository operator will decide whether or not to consolidate a particular fuel assembly.

Pending more definitive repository requirements, it is assumed that fuel from fuel rods with broken cladding will need to be collected, accounted for, and possibly packaged before it can be placed in the consolidation canister (i.e., double containment).

It is assumed that no special equipment will be required to cool short-cooled or high-burnup fuel. Because fuel could reach temperatures of approximately 500°F, the consolidation equipment that would come in contact with the fuel must accommodate thermal stresses generated by these temperatures.

Even though fuel cladding is not normally inspected during consolidation, the fuel will be inspected visually during recovery from some off-normal conditions. Conditions that could adversely impact the fuel cladding will require an inspection as part of recovery. This will involve inspecting the fuel assembly or fuel rods remotely by means of closed-circuit television. Rods with broken fuel cladding will then be segregated and processed separately.

Canisters for normal packaging of LWR fuel rods will have internal partitions. For this conceptual design study, it is assumed that three equally spaced partitions will form three equal sections. These equipment designs do not preclude revising the number of partitions and sections for different sizes of canisters.

Off-normal processing will require different canisters or partitions than those upon which this study is based. Specially designed partitions will permit the loading of canisters with intact fuel assemblies, which otherwise would not be possible with the normal process canisters. Also, these special partitions, made up as packages for insertion into the canisters after loading in the rework area, could serve as temporary

storage units that could become contaminated without serious consequences occurring.

During recovery from some off-normal conditions, using packaging that could be contaminated on its surface and could also be mechanically lidded would facilitate handling. Canister insert partitions, designed as a preliminary package for handling fuel rods in the rework area, is an example of the use of special partitions for off-normal events. Any device that is exposed to the rework or consolidation cells will be contaminated because spent fuel rods are handled there. The contamination restricts free transfer of such items through the canister loading cell as required by the process. Performing partition-to-canister loading operations at the contamination barrier separating the consolidation and canister-loading areas eliminates the problem.

The consolidation facilities have been conceptually designed with space and equipment for two processing lines each of which is rated for the facility's annual throughput. The two lines duplicate processing for all in-cell operations. Though improbable, simultaneous failure of both lines or the offsite electrical power supply could result in a compromise of annual throughput. Lost consolidation or processing time could be recouped by simultaneous operation of both lines after recovery. Therefore, the conceptual design for consolidation including that for the control room should not preclude simultaneous operation of both lines.

The consolidation system will also be able to collect gaseous and particulate contaminants on equipment, when appropriate. Fuel canisters and waste containers will be decontaminated. In addition, the facility will be designed to confine ventilation by maintaining the consolidation process cells at lower atmospheric pressure levels than the canister-loading cells. This difference in pressure must be maintained even when ports in the barrier between these two cells are opened to transfer packages through them.

The Rockwell Hanford transuranic defense-waste container will be used to dispose nonfuel components. To ensure against diversion of fuel during this operation, these waste containers may be surveyed for fissile material if normal accountability documentation indicates a variance. Surveying would account for spent fuel without destroying the packaging. Provisions must be made to recover and package any fuel found. Insertable partitions for the canister provide a means of packaging and handling the fuel that has to be repackaged in the rework area. Other packaging will return the separated nonfuel components to a waste container in the canister-loading cell.

Equipment design will address the potential impact of off-normal occurrences on the consolidation system including safety and throughput considerations. It will also specify recovery procedures and any special equipment requirements necessary for implementing the recovery procedures.

Components are expected to fail, and provisions must be made to ensure that should these failures occur there is no risk of exceeding allowable safety margins. Processing can be stopped, but safety limits must not be compromised. Equipment or facilities must be designed so they don't prevent an orderly recovery after a failure and a return to normal processing.

The structural and ventilation design of the facility, rather than the design of the consolidation equipment, must mitigate the consequences of some types of off-normal occurrences. Therefore, the facility shall provide the following three basic functions:

- physical protection to withstand abnormal structural load;
- physical barriers against water inundating the processing equipment and fuel; and
- contamination confinement by means of ventilation control and physical barriers.

The facility must physically protect its contents and withstand abnormal structural loads from

- fast winds, tornadoes, lightning, and flooding;
- aircraft accidents; and
- sabotage.

The facility must contain contamination during off-normal conditions resulting from

- seismic shock,
- volcanic action, and
- equipment failures that result in fission gas and fuel particle releases.

J-2.0 Safety Impacts

Fires and natural or man-initiated disasters are events that could threaten the integrity of the facility. Consequently, they represent a possible danger to personnel and the public. Any adverse impact on safety from the other off-normal conditions will be mitigated by proper hot cell design (i.e., with shielding walls, filtered ventilation, and decontamination capabilities) and availability of off-normal recovery equipment. The impact of the other off-normal conditions would be primarily related to the amount of consolidated fuel processed daily or weekly. However, none of the other off-normal conditions are expected to significantly affect the annual throughput because of the duplicate processing lines discussed in Section 3.3.2 of the main body of the report.

The structure or ventilation system of the facility will provide physical protection and confine contamination through the use of physical barriers. Failure to design a physical barrier against flooding, for example, could possibly result in a radiation criticality event if a sufficient number of pulled rods are displaced in the necessary lattice concurrent with the flooding. The consolidation facility, therefore, must provide dry processing in a hot cell to ensure that such criticality accidents are improbable. Designing equipment features that mitigate all

of the problems that could result from facility failure is impractical and represents an unwise application of design resources. It is the facility, therefore, that must provide a reasonable level of protection with the use of barriers and other confinement capabilities and not the equipment that will provide this safety. This assumption will be referenced often in the following discussion of off-normal conditions.

J-3.0 Discussion of Off-Normal Conditions*

J-3.1 Fuel Not Qualified for Consolidation

J-3.1.1 Definition

If consolidation facilities are provided at the repository, the majority of spent fuel will be consolidated. Some of the possible reasons that might lead to a decision against consolidation include

- very small quantities of spent fuel of unique design that would not warrant consolidation because of cost;
- fuel rods damaged to such a degree that they would require an unacceptable amount of off-normal processing; and
- fuel that, if consolidated, would not meet normal repository acceptance criteria (e.g., fuel so highly radioactive that multiple assemblies in one canister would exceed thermal acceptance criteria).

It is not possible to determine the exact number of unconsolidated assemblies that will be emplaced at the repository, but it is expected that the number will be relatively small. The normal process canister and its partitions must be able to be modified to receive fuel assemblies rather than merely rods.

---

*Each condition will be discussed under the following four headings: Definition, Recovery Procedures, Recovery Equipment, and Throughput Impact.

J-3.1.2 Recovery Procedure

Fuel not qualified for consolidation will be taken to the rework cell in the consolidation facility and placed in a container. The container may be lidded mechanically rather than welded. The lidded container will be lifted out of the rework cell by an in-cell overhead crane. The container is then placed in one of the two pass-through ports used to transfer items from the consolidation cell to the canister loading cell.

J-3.1.3 Recovery Equipment

As a basis for this study, it is assumed that the modified canister for recovery will differ in size from the normal processing canister. The sectioned insert may also be used as a temporary packaging device that may be mechanically lidded.

J-3.1.4 Throughput Impact

Fuel that is not consolidated will be transferred either to the rework cell or directly to the pass-through port. In either case, the pass-through of the idle processing cell (i.e., whichever cell is not currently being used for consolidation operations) will be used. Consequently, the impact on throughput will not be significant.

J-3.2 Canister Decontamination

J-3.2.1 Definition

Canister-loading Cells 2A and 2B are expected to remain uncontaminated during normal operations through routine housekeeping. For this reason, the outer surface of the canisters will also remain uncontaminated. Unusual events or years of service, however, could result in contamination of the outer surfaces of the canisters.

J-3.2.2 Recovery Procedure

If Cells 2A and 2B ever become contaminated, the canisters might be decontaminated routinely following consolidation, until Cells 2A and 2B are, themselves, decontaminated. Assuming Cells 2A and 2B are kept uncontaminated, decontamination of the canisters will be considered off-normal but not unusual. Both Cells 8 and 10 have the capabilities to decontaminate canisters.

J-3.2.3 Recovery Equipment

As a minimum, recovery equipment should consist of wet chemical sprays and the means for remotely handled smear sampling. Decontamination technology is sufficiently advanced so that the capability to decontaminate the canisters and containers is not a question. The intent is to specify minimum equipment and simple processes to facilitate remotely handled maintenance and to control costs. If required, more elaborate alternatives exist.

J-3.2.4 Throughput Impact

If fuel canister and waste container decontamination become a standard operating procedure for every canister leaving the consolidation facility, there will still be no significant effect on throughput. The diagram of the operating sequence (Appendix B) allows 1 hr to decontaminate canisters and waste containers. Up to 6 hr could be devoted to decontamination, if required, and still not adversely affect throughput, although an increase in staffing could be required.

J-3.3 Jammed Fuel Rods

J-3.3.1 Definition

A jammed fuel rod is one that cannot be removed from the fuel frame or loaded into a canister during normal processing. The jammed rod may

be held so tightly by the fuel frame that the rod-pulling collet cannot remove the rod from the frame. The fuel rod could also be mechanically obstructed, or the frictional grip of the grid spacers could be abnormally high.

The pulling device is designed so that it will release its grip on the fuel rod, or slip once the normal range of pulling force is exceeded. The maximum pulling force can be designed to be approximately one-third of the cladding strength. The minimum force can be twice that necessary to remove typically irradiated rods. This still leaves a well-defined range between these extremes to accommodate tolerances for design predictions that must include wear and friction. Such a design approach minimizes overstressing the fuel rod cladding. In the event that a fuel rod breaks during rod pulling, the portion remaining with the fuel frame will also be treated as a jammed fuel rod.

Fuel rods also could conceivably jam during loading into a canister. Detailed canister and canister loading system designs will attempt to provide for minimal jamming. In this off-normal condition, a bundle of fuel rods might bind while being pushed into a canister. The pushing air cylinder would then stall and not drive the rods farther into the canister. It is estimated that jammed fuel rods will occur several times annually.

J-3.3.2 Recovery Procedure

If fuel rods jam in the fuel frame, the frame will be released from the fuel-rod removal work station, lifted by an in-cell 6-ton overhead crane, and then taken to the rework cell.

Every reasonable effort will be made to keep the jammed fuel rods intact. For example, an attempt will be made to remove the obstruction or fuel-rod spacer if it is responsible for the jammed rods. In the rework cell, the fuel frame will be dismantled using remotely operated metal shearing and cutting devices. Care will be taken not to damage the

fuel-rod cladding. The cut up fuel frame will be disposed of as nonfuel bearing waste and placed in a temporary waste collector located in the rework cell. The intact fuel rod(s) will be removed from the rework cell and placed in the canister loading trough for insertion into a fuel canister.

If fuel rods jam during canister loading, two recovery methods are possible. The ram force can be increased to push the rods in or pull the rods out. This loading force can be increased while vibrating the trough supporting the fuel rods. Care is needed to avoid overstressing the rods.

If increased force is ineffective, fuel rods can be pulled out of the canister. After removing a few rods, the remaining rods can be pushed again to determine if they will go into the canister. This approach may be repeated as necessary. The pulled rods can be packaged in another canister.

J-3.3.3 Recovery Equipment

Relatively small remotely operated tools will be needed in the rework cell to cut and shear the metal framework of a typical BWR or PWR fuel assembly. In many cases, commercial power tools can be adequately adapted for the remotely handled operations. In addition, a single rod-pulling clamp or collet is needed to pull fuel rods individually if they become jammed while being loaded into a canister. This could be a single rod device based on the collet design described in the main body of this report.

J-3.3.4 Throughput Impact

It is expected that jammed fuel rods will have a minimal effect upon facility throughput. An off-normal condition resulting from a jammed fuel rod may disrupt one or two shifts but would have negligible effect on annual throughput.

J-3.4 Broken Fuel Rods

J-3.4.1 Definition

Fuel-rod cladding may break during consolidation. This off-normal condition is expected to occur approximately once every 25 MTU of fuel consolidated (11/84 draft of ANS 57.10). With a throughput of 1,500 MTU/yr, an average of one cladding break per week is expected. These breaks include compromised cladding integrity where the fuel rod remains in one piece, as well as occurrences where a fuel rod breaks into two or more discreet pieces.

In the consolidation facility, fuel rods may be broken in two ways, during pulling of the rods from the fuel frame or during routine handling and transfer. It is during rod pulling that breakage is most likely to occur; breakage during routine handling is expected to be rare.

A fuel rod that has been broken during rod pulling may result in a portion of the rod remaining within the fuel frame and another portion attached to a rod-pulling collet. A television camera will inspect the fuel frame after rod pulling. If a portion remains in the frame, it will be removed in the same manner as a jammed fuel rod.

J-3.4.2 Recovery Procedure

Broken fuel debris remaining in the fuel frame holder will be removed. If the portion of fuel rod still held by the rod-pulling collet can be loaded into a canister (and still meet repository acceptance criteria), then the portion of broken rod in the collet will be processed normally and loaded into a consolidation canister. However, if rods known to be damaged or broken are not allowed to be placed directly into the repository canisters with intact fuel, then additional recovery steps will be taken.

A broken rod may have to be separated from the other rods in the assembly after rod pulling. The rods will be deposited on a special off-normal sorting table. This deposition permits inspection of individual rods and subsequent retrieval of broken rods using the overhead manipulator and a rod grapple. The broken rod will be placed in a small package to be transported to the rework cell and subsequently packaged.

J-3.4.3 Recovery Equipment

A small, remotely operated tool will be attached to the floor mounted manipulator to grasp broken pieces of the fuel rods. Loose fuel debris will be collected by a vacuum device with a replaceable filter. A special sorting table or trough will be used to facilitate the separation of the undamaged rods from the broken rod(s).

A simple manipulator lifting adapter is needed to pick up individual fuel rods and the broken pieces of fuel rods.

J-3.4.4 Throughput Impact

It is estimated that this off-normal condition may impact throughput capacity by several hours but will not significantly impact annual throughput. Any short term disruption in throughput can be made up by the 15% excess in throughput (Appendix G), by temporarily using the dedicated maintenance shift for processing, or by running both processing lines.

J-3.5 Dropped Fuel Rods

J-3.5.1 Definition

A fuel rod is most likely to be dropped when the rods are pulled during the consolidation process. Fuel-rod drop is possible (although very unlikely) anytime after the fuel rods are removed from the support of the fuel frame and before they are contained within the collector

assembly. After they have been pulled from the assembly frame, the fuel rods are supported solely by the collets. If a rod slips from the collet's grasp, it will fall a short distance.

Several design features make a drop from the collet unlikely. First, the collets will have securely grasped the fuel rods and sufficiently overcome the frictional hold of six to eight fuel rod spacers. If a collet loses its grip on a fuel rod as pulling begins, there will be very few adverse consequences because the rod is still positioned by the fuel rod spacers.

Second, the multi-collet gripper assembly has been designed to retain its hold during a temporary power outage. Third, after the fuel rods have been pulled, they are surrounded by the rod collector assembly in a matter of seconds. Fourth, if in spite of the three features discussed above rods did fall, the drop height will be minimal. A dropped-rod catch plate at the top of the fuel holder and a safety gate at the opening of the consolidation system frame assembly will be provided. This plate below the rods and the consolidation system frame on the sides will restrict a rod's fall to about a foot. The plate will also be provided with sensors and control equipment to stop further processing until the dropped rods have been recovered. For this analysis, it has been assumed that fuel rods will be dropped at a rate of about 1/yr.

J-3.5.2 Recovery Procedures

Special tools attached to the overhead in-cell manipulator will be used to pick up dropped fuel rods. Dropped rods will be visually inspected for damage and the rods that pass inspection will be processed normally. Alternatively, the rods that do not pass inspection will be sent to the rework cell to be packaged. Rod debris, if any, can be vacuumed off the catch plate, other equipment, and the cell floor. The vacuumed material will also be sent to the rework cell and packaged.

J-3.5.3 Recovery Equipment

A device that can pick up an individual fuel rod is required for recovery from this off-normal condition. Rod debris will be vacuumed by a system whose filter and trap contents may be removed and packaged. Damaged rods may be sent to the rework cell where they are packaged.

J-3.5.4 Throughput Impact

Throughput impact will be limited to several days, perhaps a week. Throughput can be made up by temporarily operating a third shift or operating both process lines simultaneously.

J-3.6 Dropped Fuel Assembly

J-3.6.1 Definition

Dropping a fuel assembly is expected to be rare, occurring perhaps only once in every 5 or 10 yr. However, for purposes of this report it has been assumed, conservatively, that a single incident will occur annually.

Two steps in the consolidation process during which a fuel assembly could conceivably be dropped are (1) when the in-cell consolidation fuel storage rack is loaded with assemblies from the fuel storage area and (2) when fuel assemblies are transferred by crane from the storage rack to the consolidation frame for disassembly. After such a drop, the actions required are retrieving the assembly and repairing any damage to equipment caused by the impact of the fuel assembly.

J-3.6.2 Recovery Procedure

BWR fuel assemblies will be relatively easy to retrieve because they are designed with a lifting bail on the upper tie plate. This bail allows a BWR fuel assembly to be picked up from any position. PWR

assemblies are expected to require several different lifting devices because their end fittings differ. These special devices will have to accommodate PWR assemblies laying in random orientations on the cell floor or on in-cell equipment.

After placing the assembly upright, closed-circuit television cameras will scan it for evidence of fuel damage. (Handling of minor incidents of broken fuel rods was covered earlier in the Section J-3.4.) If extensive damage to the assembly occurs, the assembly will be taken to the rework cell. There it will be either disassembled or packaged, as is, for emplacement in the repository.

J-3.6.3 Recovery Equipment

Lifting devices are required to recover dropped fuel assemblies. A single universal device that could lift all assemblies (BWR and PWR) and could set them upright is desirable. Cutting tools that might be needed for disassembly are available in the rework cell.

J-3.6.4 Throughput Impact

A fuel assembly drop might impact throughput for at most 1 or 2 days; however, the time lost from consolidation operations can be recovered. No significant impact on throughput, as a result of this off-normal condition, is expected.

J-3.7 Fifteen-Minute Power Loss

J-3.7.1 Definition

It is assumed that once a year power will be lost for 15 min. The loss of electricity represents a potential off-normal condition; however, with proper design such an event will cause no significant safety or throughput problems but rather constitutes a temporary inconvenience.

J-3.7.2 Recovery Procedure

All equipment will be designed to stop in a safe condition if loss of power occurs.

J-3.7.3 Recovery Equipment

Emergency power, supplied by diesel generators, will be required as a back-up for commercially generated power. A reliable power supply (probably battery) will be required for items identified as important to security or safety, for example, control room instruments, radiation monitors, and security access controls.

J-3.7.4 Throughput Impact

A 15-min power loss will have no significant effect on throughput because it is estimated that this loss will only occur once a year.

J-3.8 Major Component Failure

J-3.8.1 Definition

It is assumed that major components will fail once a year; this refers to principal consolidation equipment and utility service. If a piece of equipment cannot be repaired or replaced in two shifts, it will be classified as a major component failure.

The worst case will be the failure of a component for which a duplicate piece of equipment is not readily available. There are some items that are not duplicated because their failure is not expected. The design provides sufficient time for remote replacement, and duplication of this equipment is not believed to be necessary. There will be no duplication, for instance, of the assay equipment for nonfuel component waste containers.

J-3.8.2 Recovery Procedure

Recovery consists of replacing the failed equipment by remote methods. All equipment within the consolidation facility hot cells will be designed to be replaced using existing in-cell auxiliary equipment.

J-3.8.3 Recovery Equipment

No additional equipment is required for recovery other than that already in the consolidation facility hot cells.

J-3.8.4 Throughput Impact

All consolidation equipment will be duplicated to provide dual process line capability so that failure of any single component in either line will cause only an insignificant impact on annual throughput. If a piece of equipment fails, processing will be shifted to the auxiliary line. A single process line can meet the throughput requirements for the facility by operating 2 shifts/day for 250 days a year.

J-3.9 Operator Error

J-3.9.1 Definition

A common error that could occur is that an operator might push the wrong control button or activate a control device out of sequence. For example, rods could fall if an operator releases the collets holding the fuel rods after they have been pulled but before they have been contained in the rod collector assembly.

J-3.9.2 Recovery Procedure

Errors such as the one described above will be eliminated by programming the controls to properly sequence the operations in either an automatic or manual mode. For example, in the above case the collet

control will be interlocked to prevent release unless the rod collector assembly has already formed a protective container around the pulled fuel rods. The process sequence can only be changed by an override control manually activated key switch. In addition, procedural controls will be employed.

J-3.9.3 Recovery Equipment

No major pieces of recovery equipment will be required. Switching process lines provides for recovery should equipment in one line become inoperable.

J-3.9.4 Throughput Impact

No long-term adverse impact on throughput appears to result from operator error because of the duplicate processing lines.

J-3.10 Evacuation of Facility

J-3.10.1 Definition

During the lifetime of the plant, an emergency evacuation of personnel from the consolidation facility may be necessary.

J-3.10.2 Recovery Procedure

The consolidation equipment will be designed so operating personnel can evacuate the facility on a moment's notice without an adverse effect. No significant adverse effects have been identified.

J-3.10.3 Recovery Equipment

No additional equipment is required in the consolidation facility hot cells. Shut-off switches will be provided in the control room so that equipment may be deactivated immediately.

J-3.10.4 Throughput Impact

No long-term impact on throughput will result from emergency evacuation of the consolidation facility.

J-3.11 Rejected Canister Weld

J-3.11.1 Definition

A canister that is rejected due to a defective weld that cannot be repaired represents an off-normal condition. A nonrepairable weld is expected to be relatively rare, at least after the initial startup, and is expected to occur no more than once annually.

J-3.11.2 Recovery Procedure

The lid would first be inspected to determine if there is enough welding material for safe lifting. If not, additional material is added. The canister is moved to the rework cell. In the rework cell, small remotely operated tools are used to open the loaded canister and then remove the fuel rods. The fuel rods will be repackaged, returned to the canister loading cell, and inserted into a canister that will be welded by normal processing. Alternatively, the canister with the rejected weld could be overpacked and then returned for normal processing.

J-3.11.3 Recovery Equipment

The recovery from a rejected canister weld is very similar, in equipment needs, to the recovery from an incident involving a waste container in which fuel has been discovered (see Section J-3.12, Waste Container with Fuel).

J-3.11.4 Throughput Impacts

A rejected canister weld will not significantly impact throughput. Recovery, estimated to take a maximum of 2 wk in the rework cell, will be done off-line and will not affect throughput significantly.

J-3.12 Waste Container With Fuel

J-3.12.1 Definition

Waste containers leaving the consolidation facility may be assayed to ensure that they contain no significant quantities of fuel. Perhaps once or twice in the lifetime of the plant a significant quantity of fuel will inadvertently be placed inside a waste container.

J-3.12.2 Recovery Procedure

The waste container with fuel will be transferred to the rework cell where the lid will be removed. Nonfuel bearing waste containers sealed with clamps, bolts, or other mechanical sealing devices rather than a welded seal would simplify the recovery of fuel. For this study it has been assumed that the container is welded, and a new lid and container are required.

In the rework cell the container will be placed horizontally with the open end accessible to the manipulators, special tools, and other equipment used to unload the container. Monitoring equipment will measure the radioactivity of each unloaded item to locate and separate the fuel that was detected by assay. Any fuel found will be documented for accountability and packaged in the rework cell. The waste container will be vacuumed to remove any remaining debris. The vacuum filter and the filled waste container packaging will be monitored. Because this analysis is based on the assumption that the opened waste container is not reusable, it will also become waste.

J-3.12.3 Recovery Equipment

Small power tools adapted for remote use will be needed to grind, shear, or cut metal, such as the sealed or welded lid of a waste container. Welding capability is already available as are some decontamination methods. Small clamps or grapples, probably operated by

manipulators, will be required to unload the waste container and subsequently reload a package for transfer to another waste container. A vacuum system will be required to remove debris from the bottom of the waste container. The same metal cutting equipment, used on the waste container lid, could be used to reduce the volume of the waste container itself, if a reduction in volume is chosen. Monitoring equipment, capable of detecting fissile material that can be operated remotely with manipulators, will also be required.

J-3.12.4 Throughput Impact

This off-normal condition is assumed to occur once or twice in the lifetime of the plant. This rare occurrence will have no serious impact upon throughput.

J-3.13 Extended Loss of Power

J-3.13.1 Definition

An extended loss of electrical power is one that exceeds 15 min and could last hours or days. This off-normal condition is expected to occur once during the lifetime of the plant.

The consolidation process and equipment will not be affected by an extended loss of power, with one possible exception. If power is lost after the rods have been pulled but before the rod-collector assembly has formed a container around the suspended fuel rods, then the grip of the collets on the rods could relax and fuel rods could begin falling, if the collet grasping power decreases significantly.

J-3.13.2 Recovery Procedure

The rod collector assembly connected to an emergency or a manually operated back-up power supply will enable the device to complete its cycle, form a container for the fuel rods, and deposit them into the canister loading trough during the power loss.

J-3.13.3 Recovery Equipment

The site and facility design will provide emergency back-up power for critical systems.

J-3.13.4 Throughput Impact

No long-term effect on throughput is expected to result from a loss of power extending up to a week.

J-3.14 Loaded Canister Drop

J-3.14.1 Definition

Dropping a loaded canister is regarded as highly improbable; it will occur perhaps once during the lifetime of the plant. The frequency rate for a dropped canister differs from that estimated for a fuel assembly, based primarily on the potential for operator error. A single grapple and one procedure will be used for canisters. Fuel assemblies will be handled with a variety of grapples and a variey of procedures, which increases the likelihood of error.

The greatest distance possible that the canister could fall would be about 20-22 ft, if the canister dropped as it was leaving the canister loading cells and was being transferred to the load-out decontamination cells. Probably the worst-case situation will be dropping the fuel canister into one of the load-out/decontamination cells. This drop involves the maximum height and there are no cranes or manipulators in these cells. Also, these cells are relatively small; therefore, there is limited working space for recovery.

Some damage would be expected to a canister dropped 20-22 ft unless it were designed to withstand such an event. Also, some of the fuel rods might be broken or bent on impact. A breach in the canister could cause fuel to fall out and could vent any released fission gases.

J-3.14.2 Recovery Procedure

The damaged canister will be lifted by crane, passed through the wall separating the consolidation and the canister-loading cells, and lowered into the rework cell. The canister can then be overpacked or cut open and the fuel rods removed. If fuel rods are removed, the damaged canister will be decontaminated or reduced in volume and packaged as nonfuel waste. The packaged fuel rods will be taken back to the canister-loading cells, placed in a canister, and the canister welded closed.

Any pieces of fuel rods or debris left in the load-out/decontamination cell, as a result of the canister drop, are removed. Large pieces of fuel rods are picked up by special tools (small clamps and grapples) attached to an overhead crane or manipulator; small debris is vacuumed. Debris and fuel pieces are then placed in a container and taken to the rework cell to be repackaged.

J-3.14.3 Recovery Equipment

The equipment required for recovery from this event is the same as that required for an off-normal condition of a rejected canister weld. Small, remotely operated clamps or grapples attached to an overhead crane or manipulator will be required.

J-3.14.4 Throughput Impact

Dropping a loaded canister will not cause any significant disruption in throughput. Such an occurrence is assumed to be extremely rare (once in the lifetime of the plant), and throughput will be shifted to the auxiliary process line to maintain production commitments.

J-3.15 Canister Rod Spill

J-3.15.1 Definition

Spilling the fuel rods from a canister is extremely improbable. For this study, it is assumed that a loaded canister will be dropped or tipped only once in the lifetime of the plant.

If the rods have been packed relatively tightly in the canister and the spill does not turn the canister upside down, it is possible that the rods will not spill out on the floor. However, some of the rods could come out partially and protrude outside the canister opening. It is possible also that all the fuel rods may fall out of the canister.

J-3.15.2 Recovery Procedure

Recovery will require placing the canister in an upright position and picking up the spilled fuel rods. Because the canister could be damaged, all of the fuel rods will probably be repackaged in a new canister.

The canister might be placed upright by fitting a noose around it and lifting it with the crane. If this is not possible, lifting bails could be attached to the canister by explosive or thermite welding.

Fuel rods will be picked up with special tools (small clamps and grapples) that grip one fuel rod at a time. Either a crane or more likely an overhead manipulator will be used in this operation. Intact fuel rods will be returned to the consolidation cell and placed in the canister loading trough, whereas damaged fuel will be taken to the rework cell for repackaging. Before normal operations are resumed, it is anticipated that the canister-loading cell will be decontaminated.

J-3.15.3 Recovery Equipment

The equipment required for recovery will include clamps or grapples operated by remote control and positioned by a crane or manipulator. These tools will grip one fuel rod at a time and reload the undamaged fuel into a canister. Damaged fuel will be taken to the rework cell for separate repackaging.

Explosive or thermite welding equipment will be needed to possibly attach a lifting bail to the canister. The welding device and bail will be positioned by an overhead manipulator.

J-3.15.4 Throughput Impact

No long-term adverse throughput consequences will occur as a result of this off-normal condition.

J-3.16 Fire

J-3.16.1 Definition

It is assumed that a fire at the consolidation facility will occur once during the lifetime of the plant. The fire could occur in or outside of the process cells. For example, fire outside the cells could result from motors in the operating aisles that provide the power for the in-cell consolidation equipment.

J-3.16.2 Recovery Procedure

Normal recovery from a fire will involve activation of a fire suppression system (Halon or bromotrifluoromethane in the process cells) and a partial or full evacuation of personnel. In addition, fire fighting personnel will be called, as required.

J-3.16.3 Recovery Equipment

With the exception of the in-cell use of Halon and special anticontamination clothing and breathing apparatus for personnel, fire recovery will use standard fire fighting equipment.

J-3.16.4 Throughput Impact

A fire could significantly affect throughput depending upon the extent of damage and possible contamination caused by the fire. A severe fire could halt throughput for several months or longer.

J-3.17 Passing Canisters or Fuel Rods Between Process Cells

Off-normal conditions may require that a fuel canister, a waste container, or fuel rods be passed from one process cell to another. It is expected that fuel rod transfers will use the port normally used to load fuel canisters. An additional port is recommended to facilitate transfer of repackaged fuel rods from the rework cell to canisters. This additional port will also facilitate fuel canister/waste container transfers to the rework cell.

Modifications to the normal port sleeve in order to make it removable will enable this port to duplicate the capability of the additional port. During off-normal transfers, the consolidation and canister-loading cells will momentarily be open to one another by means of the normal port opening if it is used for the reverse transfer operation. This transfer will not spread contaminants, however, because of the pressure differential between the cells.

The damaged canister will be recovered by placing it horizontally on the canister holder assembly with a crane in the canister-loading cell. The port sleeve will be moved, allowing the canister to clear the port opening.

The canister-loading trough in the consolidation cell is moved out of the way (to its loading position beneath the rod collector assembly), and a temporary receiving cradle is installed on its frame in line with the port opening. The canister, lid-end first, is then moved horizontally from the canister-loading cell into the consolidation cell by an auxiliary air cylinder attached to the canister holder assembly. Once the canister has partially entered the consolidation cell, the overhead crane attaches to the canister's pintle. The canister is then pushed completely into the cell while supported by the temporary cradle and the crane.

The crane lifts the canister until it is vertical and moves it over the cover block of the rework cell, which will already have been removed. The canister is lowered into the rework cell, the crane releases the canister and is removed from the rework cell. The cell's cover block is then replaced.

Individual fuel rods or a bundle of fuel rods will be transferred between process cells in much the same way as normal consolidation processing.

J-4.0 Recovery Equipment and Facilities

The necessary recovery equipment and facilities have been defined and described in the preceding portions of this appendix. The discussion that follows estimates their capital and developmental costs and scheduling (Table 18). Details about these costs and schedules are provided in the discussions that follow.

J-4.1 Horizontal Pass-Through Modifications

Recovery from various off-normal conditions requires pass-through capability in either direction for canisters or canister-sized objects, through a port between the consolidation and canister-loading cells. The port is currently designed to send a canister sector quantity of fuel rods from the consolidation to the canister-loading cell.

The existing horizontal port could be modified to provide the required service. The following equipment or facilities will be required:

- a horizontal transfer cradle (Figure J-1);
- an enlarged pass-through port whose size can be altered, as required, for normal or off-normal operation; and
- a pneumatic cylinder that pushes objects in the opposite direction of the normal process flow.

The canister-loading trough assembly and the canister holder assembly are already included in the development program as it was scoped for the consolidation equipment. The modifications discussed above are a relatively minor part of that program. Therefore, no additional development cost or schedule estimates are included here.

The additional capital cost estimates for the modifications on a unit basis are as follows:

• Cradle	$10,000
• Port size adjuster or sleeve	$10,000
• Return cylinder assembly	$ 5,000
TOTAL	$25,000

The operational features of a vertical pass-through alternative* to the horizontal pass-through technique is considered. The mechanical features of the vertical and the horizontal pass-through systems are compared below. Sketches of the vertical pass-through equipment are shown in Figures J-2 and J-3.

As shown in Figure J-2, both pass-through structures have been placed along the outer wall. This placement prevents interference with the volume reduction equipment and also allows for an optional pass-through drive motor to be placed outside of the process cells.

---

*The canister or other items remain vertical.

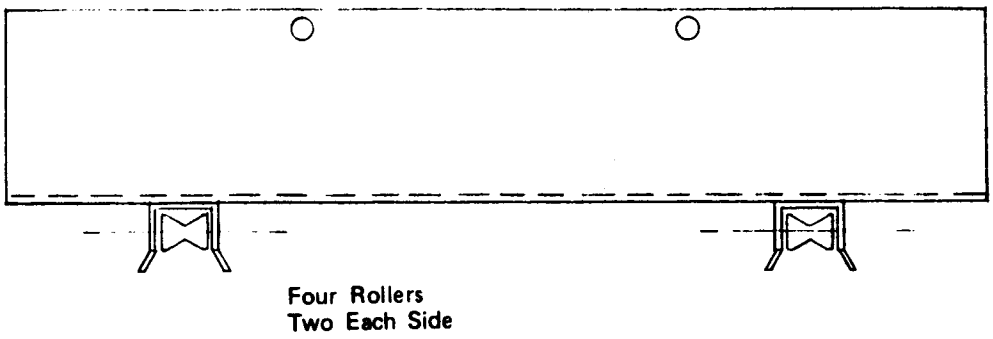

ELEVATION

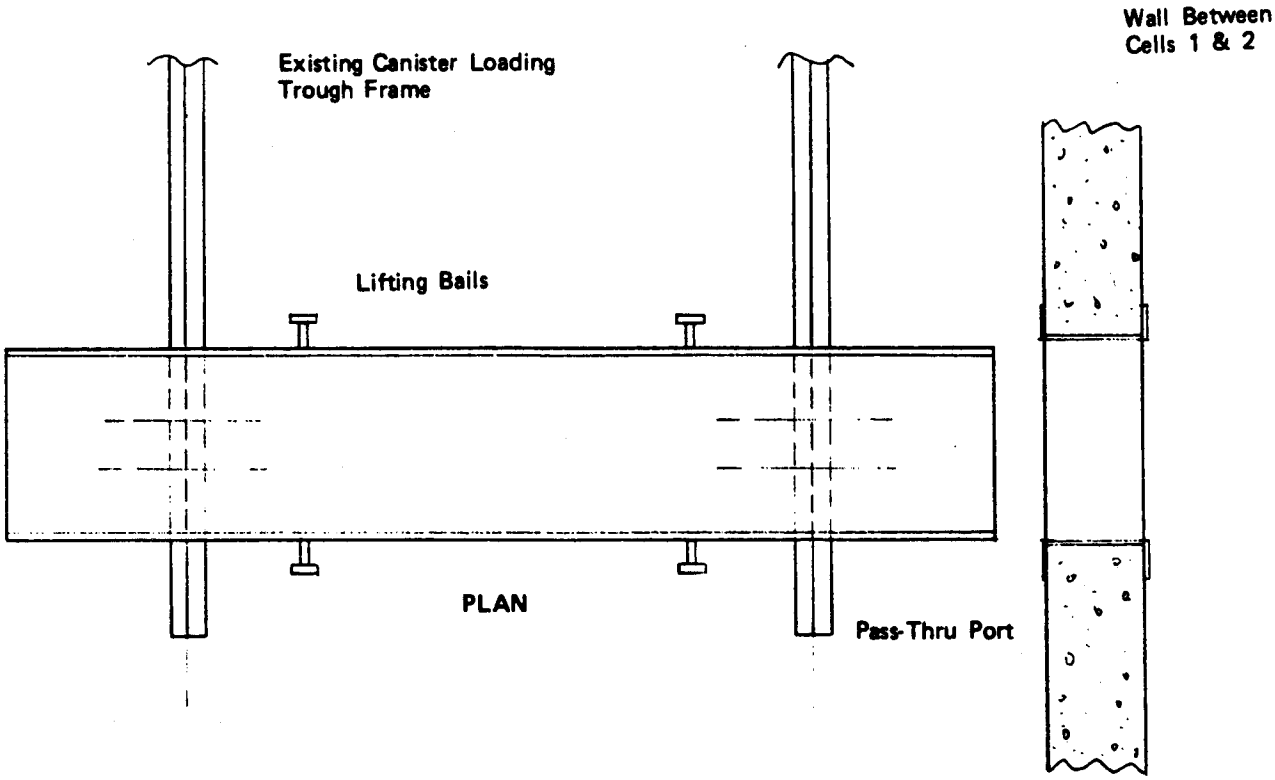

Figure J-1. Horizontal Transfer Cradle

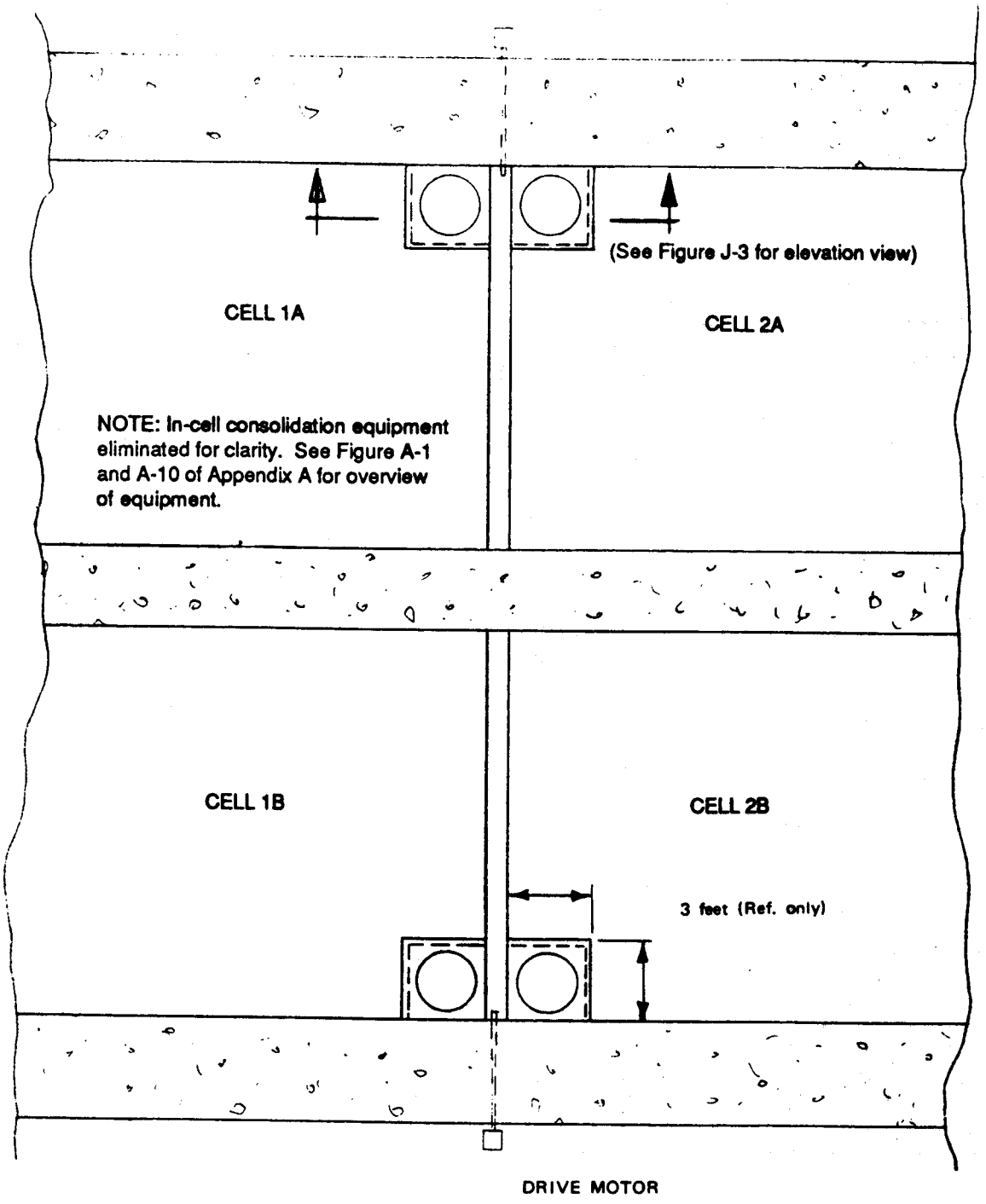

Figure J-2. Plan View of the Vertical Transfer Device

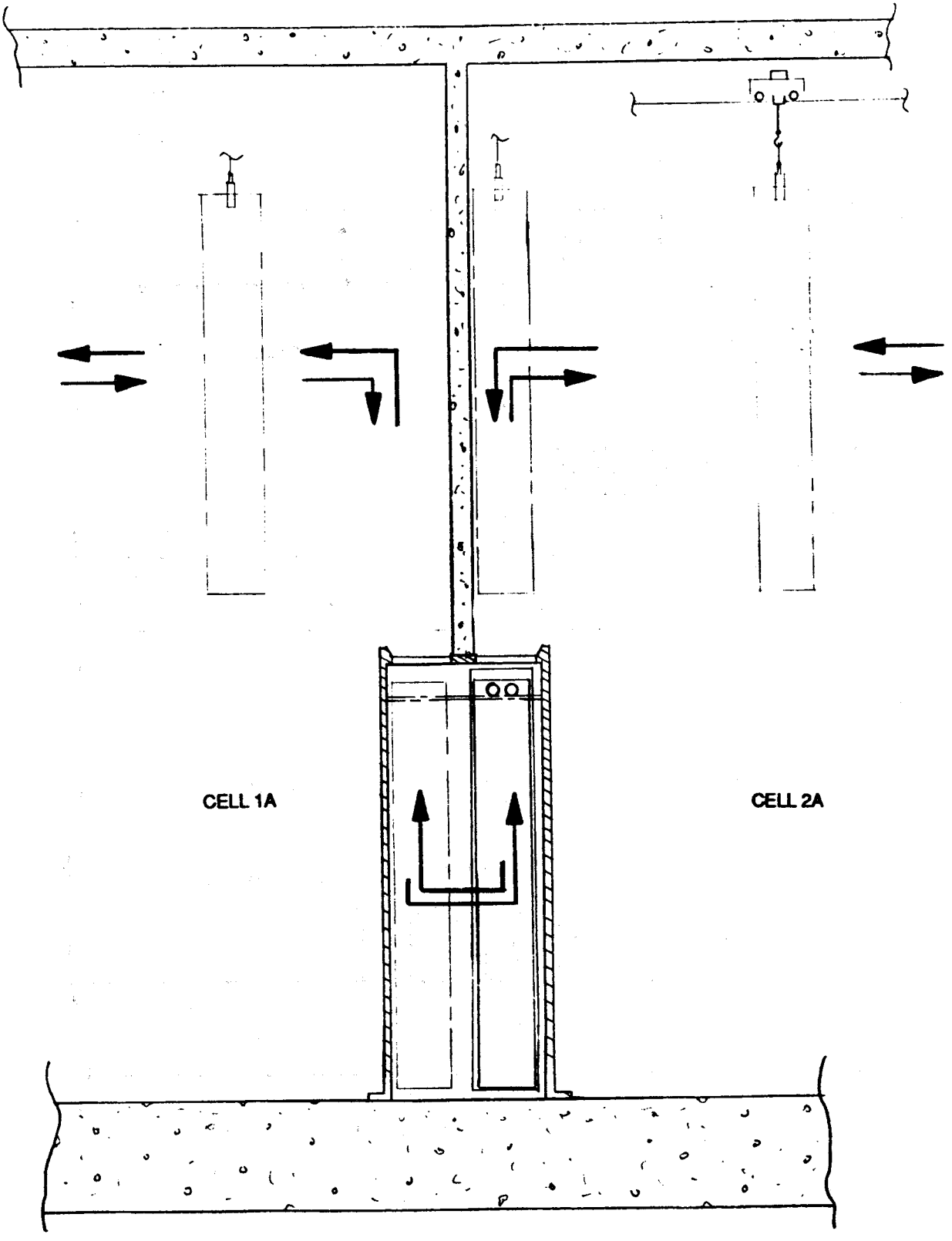

Figure J-3. Elevation of the Vertical Transfer Device

As a basis for this discussion, it is expected that the largest component or piece of equipment for which the pass-through is designed is a waste container, with a 24-in. outside diameter. Allowing for working clearances and wall thicknesses, the pass-through needs to be about 3 x 3 x 16 ft high. There is also a possibility that adding a vertical pass-through will require that the width of the cell be increased by a foot or so. This possibility arises because nearly all of the space along the face of the wall between the processing cells is allocated to consolidation equipment.

Additional equipment or structural modifications will require an increased cell width. Pending further study, the horizontal pass-through port will facilitate fuel-rod collection and canister loading and is believed to be adequate for off-normal pass-through capability. However, the analysis of off-normal conditions performed for this study has indicated the desirability of a vertical pass-through system using a drawer. The rationale for its merit is based on ease of operation and enhancement of contamination control. If the vertical pass-through can be incorporated in the detail design without significantly impacting the size of the hot cells, it is recommended that the vertical concept be adopted.

The vertical pass-through equipment will not be complex and will consist of a welded stainless steel structure and a machined and welded transfer cart. An optional low power, through-the-wall drive system or a crane implemented operation will be required. The through-the-wall drive will use a simple rack-and-pinion technique that will facilitate remotely handled maintenance of either the gearing or transfer cart. Estimates indicate that no development activities appear to be necessary and the capital cost should be about $35,000 per unit.

J-4.2 Single Fuel-Rod Grapple

Recovery from off-normal conditions involving jammed and broken fuel rods, dropped fuel rods, and fuel rods spilled from canisters requires

a single fuel-rod grapple. The grapple must be able to grasp and lift fuel rods of varying diameters, lengths, and weights. It must also be able to engage the fuel rod at either end from a direction that is either perpendicular or parallel to its length. An overhead manipulator or crane will position and operate the grapple. One possible approach is to use a remotely controlled pneumatically actuated device that is positioned by an overhead manipulator. The device must exert a force of several hundred pounds. This force is required to remove jammed fuel rods or portions of broken fuel rods that remain in the fuel frame.

The single fuel-rod grapple will be a relatively simple device. It is prudent to carry out a development program that ensures compatibility with the varied requirements listed above. It is estimated that a 3-mo, two-man developmental effort is necessary to accomplish this. The work will include a review of existing technology, selection of the components, design, and prototype testing. It is estimated that a nominal one-half man-year, $50,000 program will be needed to design a unit and that the unit can be produced for $10,000; eight of these units will be required.

J-4.3 Broken Fuel-Rod Sorting Table

A sorting table, which is placed on the canister-loading trough by an overhead crane, will be required to recover from an off-normal event in which fuel rods are broken during pulling. The canister-loading trough is placed in its normal position to receive fuel rods from the rod-collector assembly. However, instead of normal trough loading, the rods will be placed on a relatively flat-surfaced sorting table with sides that prevent the rods from falling. This table permits inspection of individual rods and subsequent retrieval of broken or partial rods with the overhead manipulator and grapple discussed earlier. The central portion of the sorting table will have a trap door to transfer the undamaged rods to the canister-loading trough after recovery. The table design is relatively simple; therefore, no pre-design developmental effort will be required. The cost of the table is estimated at $15,000.

J-4.4 Miscellaneous Remotely Operated Tools

Recovery from off-normal conditions involving a broken fuel rod, fuel-assembly drop, waste container found to contain fuel, rejected canister weld, and a loaded-canister drop requires a collection of miscellaneous remotely operated tools. In general, these basic tools are commercially available but will require some modifications for remotely controlled operations. Positioning and control by manipulative equipment used in a hot cell are examples of remote operation. The modifications required will necessitate mechanical changes that will be familiar to an experienced designer of such equipment. Therefore, an extensive developmental program does not appear to be necessary, except for the design of remotely handled welding operations to attach lifting bails. It is estimated that this program will require two people for 3 mo. The tools or components that will be required consist of

- a heavy duty vacuum system with an inert, disposable filter to recover broken fuel debris;
- a variety of fuel assembly grapples for horizontal or vertical engagement to lift dropped fuel assemblies;
- an assortment of heavy duty power tools for use in the rework cell to grind and cut metal for recovering encapsulated fissile material and for reducing volume; and
- remote welding capability (i.e., explosive or thermite welding) for attaching lifting bails to dropped fuel canisters or waste containers for retrieval by a crane.

The unit cost of these items with modifications are listed below:

• Vacuum system	$ 10,000
• Nonvertical fuel assembly grapple (eight required)	$ 80,000
• Power tool assortment	$ 20,000
• Remote-handled welding equipment	$ 10,000
TOTAL	$120,000

J-4.5 Rework Fissile Material Monitor

A fissile material monitor is required in the rework cell during recovery from an off-normal condition involving fuel discovered in a nonfuel waste container. After removing the waste container's lid, the contents of the container must be monitored as portions are removed.

It is estimated that a 3-mo development program for the monitor will require $50,000. The major complications, with respect to the design, relate to the high level of background radiation that is expected in the rework cell and the need to include a remote-handling capability to operate the monitor. The unit cost of the monitor is estimated at $10,000.

J-4.6 Rework Canister Rotating Device

The interior height of the rework cell is 19 ft as shown on Figure A-10. This height allows the fuel canisters or waste containers to be rotated from a horizontal to a vertical position for loading or unloading. The rotation device, required to perform this operation, is expected to be rather large and heavy but not complex.

It is not expected that the equipment design will require a predesign developmental effort. The rework canister rotating device will be operated and maintained remotely. One device is required, and it is estimated at a cost of $30,000.

See Table 18 for a summary of the costs and development activities associated with the recovery equipment and facilities discussed above.

APPENDIX K-1.0

RIB/SEPDB DATA

This report contains no data from, or for inclusion in, the RIB and/or SEPDB.

DISTRIBUTION LIST

B. C. Rusche (RW-1)
Director
Office of Civilian Radioactive
Waste Management
U.S. Department of Energy
Forrestal Building
Washington, DC 20585

Ralph Stein (RW-23)
Office of Civilian Radioactive
Waste Management
U.S. Department of Energy
Forrestal Building
Washington, DC 20585

J. J. Fiore, (RW-221)
Office of Civilian Radioactive
Waste Management
U.S. Department of Energy
Forrestal Building
Washington, DC 20585

M. W. Frei (RW-231)
Office of Civilian Radioactive
Waste Management
U.S. Department of Energy
Forrestal Building
Washington, DC 20585

E. S. Burton (RW-25)
Siting Division
Office of Geologic Repositories
U.S. Department of Energy
Forrestal Building
Washington, DC 20585

C. R. Cooley (RW-24)
Geosciences & Technology Division
Office of Geologic Repositories
U.S. Department of Energy
Forrestal Building
Washington, DC 20585

V. J. Cassella (RW-222)
Office of Civilian Radioactive
Waste Management
U.S. Department of Energy
Forrestal Building
Washington, DC 20585

T. P. Longo (RW-25)
Program Management Division
Office of Geologic Repositories
U.S. Department of Energy
Forrestal Building
Washington, DC 20585

Cy Klingsberg (RW-24)
Geosciences & Technology Division
Office of Geologic Repositories
U.S. Department of Energy
Forrestal Building
Washington, DC 20585

B. G. Gale (RW-223)
Office of Civilian Radioactive
Waste Management
U.S. Department of Energy
Forrestal Building
Washington, DC 20585

R. J. Blaney (RW-22)
Program Management Division
Office of Geologic Repositories
U.S. Department of Energy
Forrestal Building
Washington, DC 20585

R. W. Gale (RW-40)
Office of Civilian Radioactive
Waste Management
U.S. Department of Energy
Forrestal Building
Washington, DC 20585

J. E. Shaheen (RW-44)
Outreach Programs
Office of Policy, Integration and
Outreach
U.S. Department of Energy
Forrestal Building
Washington, DC 20585

J. O. Neff, Manager
Salt Repository Project Office
U.S. Department of Energy
505 King Avenue
Columbus, OH 43201

D. C. Newton (RW-23)
Engineering & Licensing Division
Office of Geologic Repositories
U.S. Department of Energy
Forrestal Building
Washington, DC 20585

O. L. Olson, Manager
Basalt Waste Isolation Project
Office
Richland Operations Office
U.S. Department of Energy
Post Office Box 550
Richland, WA 99352

Carl P. Gertz, Project Manager
Waste Management Project Office
U.S. Department of Energy
P.O. Box 98518
Las Vegas, NV 89193-8518

D. F. Miller, Director
Office of Public Affairs
U.S. Department of Energy
Post Office Box 14100
U.S. Department of Energy
Las Vegas, NV 89114

P. M. Bodin (12)
Office of Public Affairs
U.S. Department of Energy
Post Office Box 14100
Las Vegas, NV 89114

B. W. Church, Director
Health Physics Division
U.S. Department of Energy
Post Office Box 14100
Las Vegas, NV 89114

Chief, Repository Projects Branch
Division of Waste Management
U.S. Nuclear Regulatory Commission
Washington, D.C. 20555

Document Control Center
Division of Waste Management
U.S. Nuclear Regulatory Commission
Washington, D.C. 20555

S. A. Mann, Manager
Crystalline Rock Project Office
U.S. Department of Energy
9800 South Cass Avenue
Argonne, IL 60439

K. Street, Jr.
Lawrence Livermore National
Laboratory
Post Office Box 808
Mail Stop L-209
Livermore, CA 94550

L. D. Ramspott (3)
Technical Project Officer for NNWSI
Lawrence Livermore National
Laboratory
Post Office Box 808
Mail Stop L-204
Livermore, CA 94550

W. J. Purcell (RW-20)
Associate Director
Office of Civilian Radioactive
Waste Management
U.S. Department of Energy
Forrestal Building
Washington, DC 20585

D. T. Oakley (4)
Technical Project Officer for NNWSI
Los Alamos National Laboratory
P.O. Box 1663
Mail Stop F-619
Los Alamos, NM 87545

L. R. Hayes (3)
Technical Project Officer for NNWSI
U.S. Geological Survey
Post Office Box 25046
421 Federal Center
Denver, CO 80225

NTS Section Leader
Repository Project Branch
Division of Waste Management
U.S. Nuclear Regulatory Commission
Washington, D.C. 20555

V. M. Glanzman
U.S. Geological Survey
Post Office Box 25046
913 Federal Center
Denver, CO 80225

P. T. Prestholt
NRC Site Representative
1050 East Flamingo Road
Suite 319
Las Vegas, NV 89109

M. E. Spaeth
Technical Project Officer for
NNWSI Science Applications
International Corporation
Suite 407
101 Convention Center Drive
Las Vegas, NV 89109

SAIC-T&MSS Library (2)
Science Applications
International Corporation
Suite 407
101 Convention Center Drive
Las Vegas, NV 89109

W. S. Twenhofel, Consultant
Science Applications
International Corp.
820 Estes Street
Lakewood, CO 89215

A. E. Gurrola
General Manager
Energy Support Division
Holmes & Narver, Inc.
Mail Stop 580
Post Office Box 14340
Las Vegas, NV 89114

J. A. Cross, Manager
Las Vegas Branch
Fenix & Scisson, Inc.
Mail Stop 514
Post Office Box 14308
Las Vegas, NV 89114

Neal Duncan (RW-44)
Office of Policy, Integration, and
Outreach
U.S. Department of Energy
Forrestal Building
Washington, DC 20585

J. S. Wright
Technical Project Officer for NNWSI
Westinghouse Electric Corporation
Waste Technology Services Divison
Nevada Operations
Post Office Box 708
Mail Stop 703
Mercury, NV 89023

ONWI Library
Battelle Columbus Laboratory
Office of Nuclear Waste Isolation
505 King Avenue
Columbus, OH 43201

W. M. Hewitt, Program Manager
Roy F. Weston, Inc.
955 L'Enfant Plaza, Southwest,
Suite 800
Washington, DC 20024

H. D. Cunningham
General Manager
Reynolds Electrical &
Engineering Co., Inc.
Post Office Box 14400
Mail Stop 555
Las Vegas, NV 89114

T. Hay, Executive Assistant
Office of the Governor
State of Nevada
Capitol Complex
Carson City, NV 89710

R. R. Loux, Jr., Executive
Director (3)
Nuclear Waste Project Office
State of Nevada
Evergreen Center, Suite 252
1802 North Carson Street
Carson City, NV 89701

C. H. Johnson, Technical
Program Manager
Nuclear Waste Project Office
State of Nevada
Evergreen Center, Suite 252
1802 North Carson Street
Carson City, NV 89701

John Fordham
Desert Research Institute
Water Resources Center
Post Office Box 60220
Reno, NV 89506

Department of Comprehensive
Planning
Clark County
225 Bridger Avenue, 7th Floor
Las Vegas, NV 89155

Lincoln County Commission
Lincoln County
Post Office Box 90
Pioche, NV 89043

Community Planning and
Development
City of North Las Vegas
Post Office Box 4086
North Las Vegas, NV 89030

City Manager
City of Henderson
Henderson, NV 89015

Leslie Jardine
Project Manager
Bechtel National Inc.
P.O. Box 3965
San Francisco, CA 94119

Flo Butler
Los Alamos Technical Associates
1650 Trinity Drive
Los Alamos, New Mexico 87544

Timothy G. Barbour
Science Applications
International Corporation
1626 Cole Boulevard, Suite 270
Golden, CO 80401

E. P. Binnall
Field Systems Group Leader
Building 50B/4235
Lawrence Berkeley Laboratory
Berkeley, CA 94720

Dr. Martin Mifflin
Desert Research Institute
Water Resources Center
Suite 1
2505 Chandler Avenue
Las Vegas, NV 89120

Planning Department
Nye County
Post Office Box 153
Tonopah, NV 89049

Economic Development
Department
City of Las Vegas
400 East Stewart Avenue
Las Vegas, NV 89101

Director of Community
Planning
City of Boulder City
Post Office Box 367
Boulder City, NV 89005

Commission of the European
Communities
200 Rue de la Loi
B-1049 Brussels
BELGIUM

Technical Information Center
Roy F. Weston, Inc.
955 L'Enfant Plaza, Southwest,
Suite 800
Washington, DC 20024

R. Harig
Parsons, Brinckerhoff, Quade &
Douglas, Inc.
1625 Van Ness Ave.
San Francisco, CA 94109-3678

Dr. Madan M. Singh, President
Engineers International, Inc.
98 East Naperville Road
Westmont, IL 60559-1595

Roger Hart
Itasca Consulting Group, Inc.
P.O. Box 14806
Minneapolis, Minnesota 55414

T. H. Isaacs (RW-22)
Office of Civilian Radioactive
Waste Management
U.S. Department of Energy
Forrestal Building
Washington, DC 20585

D. H. Alexander (RW-232)
Office of Civilian Radioactive
Waste Management
U.S. Department of Energy
Forrestal Building
Washington, DC 20585

B. J. King, Librarian (2)
Basalt Waste Isolation Project
Library
Rockwell Hanford Operations
Post Office Box 800
Richland, WA 99352

David K. Parrish
RE/SPEC Inc.
3815 Eubank, N.E.
Albuquerque, NM 87191

D. L. Fraser, General Manager
Reynolds Electrical & Engineering
Co., Inc.
Mail Stop 555
Post Office Box 14400
Las Vegas, NV 89114-4400

Gerald Parker (RW-241)
Office of Civilian Radioactive
Waste Management
U.S. Department of Energy
Forrestal Building
Washington, DC 20585

J. P. Knight (RW-24)
Office of Civilian Radioactive
Waste Management
U.S. Department of Energy
Forrestal Building
Washington, DC 20585

Allen Jelacic (RW-233)
Office of Civilian Radioactive
Waste Management
U.S. Department of Energy
Forrestal Building
Washington, DC 20585

J. R. Rollo
Deputy Assistant Director for
Engineering Geology
U.S. Geological Survey
106 National Center
12201 Sunrise Valley Drive
Reston, VA 22092

R. Lindsay Mundell
United States Bureau of Mines
P.O. Box 25086
Building 20
Denver Federal Center
Denver, Colorado 80225

Vincent Gong
Technical Project Officer for NNWSI
Reynolds Electrical & Engineering
Co., Inc.
Mail Stop 615
Post Office Box 14400
Las Vegas, NV 89114-4400

Christopher M. St. John
J. F. T. Agapito Associates, Inc.
27520 Hawthorne Blvd., Suite 137
Rolling Hills Estates, CA 90274

J. P. Pendalino
Technical Project Officer for NNWSI
Holmes & Narver, Inc.
Mail Stop 605
Post Office Box 14340
Las Vegas, NV 89114

Eric Anderson
Mountain West Research-Southwest,
Inc.
398 South Mill Avenue, Suite 300
Tempe, AZ 85281

Judy Foremaster (5)
City of Caliente
Post Office Box 158
Caliente, NV 89008

S. D. Murphy
Technical Project Officer for NNWSI
Fenix & Scisson, Inc.
Mail Stop 514
Post Office Box 15408
Las Vegas, NV 89114

S. H. Kale (RW-20)
Office of Civilian Radioactive Waste Management
U.S. Department of Energy
Forrestal Building
Washington, DC 20585

J. H. Anttonen, Deputy Assistant Manager for Commercial Nuclear Waste
Basalt Waste Isolation Project Office
U.S. Department of Energy
P.O. Box 550
Richland, WA 99352

6300	R. W. Lynch
6310	T. O. Hunter
6310	NNWSICF
6310	6310 100/1244/SAND84-7130/Q3
6311	A. L. Stevens
6311	C. Mora
6311	C. Horne (2)
6312	F. W. Bingham
6313	T. E. Blejwas
6314	J. R. Tillerson
6315	S. Sinnock
6316	R. B. Pope
6332	WMT Library (20)
6430	N. R. Ortiz
3141	S. A. Landenberger (5)
3151	W. L. Garner (3)
8024	P. W. Dean
3154-3	C. H. Dalin (28) for DOE/OSTI