CONTRACTOR REPORT

SAND82—7157/4 of 4
Unlimited Release
UC—63

Analysis of Concentrating PV-T Systems for the Commercial/Industrial Sector

Volume IV. Design Analysis and Trade-Off Study

W. E. Schwinkendorf
The BDM Corporation
1801 Randolph Rd, SE
Albuquerque, NM 87106

Prepared by Sandia National Laboratories Albuquerque, New Mexico 87185 and Livermore, California 94550 for the United States Department of Energy under Contract DE-AC04-76DP00789

Printed September 1984

When printing a copy of any digitized SAND Report, you are required to update the markings to current standards.

Issued by Sandia National Laboratories, operated for the United States Department of Energy by Sandia Corporation.
NOTICE: This report was prepared as an account of work sponsored by an agency of the United States Government. Neither the United States Government nor any agency thereof, nor any of their employees, nor any of their contractors, subcontractors, or their employees, makes any warranty, express or implied, or assumes any legal liability or responsibility for the accuracy, completeness, or usefulness of any information, apparatus, product, or process disclosed, or represents that its use would not infringe privately owned rights. Reference herein to any specific commercial product, process, or service by trade name, trademark, manufacturer, or otherwise, does not necessarily constitute or imply its endorsement, recommendation, or favoring by the United States Government, any agency thereof or any of their contractors or subcontractors. The views and opinions expressed herein do not necessarily state or reflect those of the United States Government, any agency thereof or any of their contractors or subcontractors.

Printed in the United States of America
Available from
National Technical Information Service
U.S. Department of Commerce
5285 Port Royal Road
Springfield, VA 22161

NTIS price codes
Printed copy: A10
Microfiche copy: A01

SAND82—7157/4 of 4
Unlimited Release
Printed September 1984

Distribution
Category UC—63

Analysis of Concentrating PV-T Systems for the Commercial/Industrial Sector

Volume IV. Design Analysis and Trade-Off Study

W. E. Schwinkendorf
The BDM Corporation
1801 Randolph Rd, SE
Albuquerque, NM 87106

Abstract

Detailed reference designs developed for optimally sized photovoltaic-thermal (PV-T) systems are presented for three selected applications. The results of trade-off analyses to determine the effects of load variations, new components, changes in location, and variations in array cost are also discussed. SAND82—7157/2 provides an overview of available photovoltaic-thermal (PV-T) technology and discusses general issues associated with the design and installation of PV-T systems. SAND82—7157/3 identifies the technical issues involved in designing a photovoltaic-thermal system and provides guidance for resolving such issues. A summary of the major results of this entire study and conclusions concerning PV-T systems and applications is presented in SAND82—7157/1.

FOREWORD

This volume of technical report BDM/A-82-458-TR-R1 is submitted by The BDM Corporation, 1801 Randolph Rd., S.E., Albuquerque, N.M. 87106. This report documents work performed for Sandia National Laboratories under contract 68-0361. This volume documents the detailed PV-T system designs developed for three selected applications, and presents the results of a trade-off study performed for these same three applications.

This work was performed under the guidance of Mr. Miguel Rios, the Sandia Contract Monitor.

TABLE OF CONTENTS

Chapter		Page
I	INTRODUCTION	I-1
II	DIXON, CALIFORNIA MEAT-PACKING PLANT	II-1
	A. INTRODUCTION	II-1
	1. Plant Description	II-1
	2. Design Trade-Off Studies	II-4
	3. Generalized Design Concept	II-6
	B. ELECTRICAL SYSTEM DESIGN	II-10
	1. Electrical System Overview	II-10
	2. Field Design	II-14
	3. DC Switchgear	II-20
	4. Inverters	II-22
	5. AC Power Distribution System	II-25
	6. Control Systems	II-27
	7. Auxiliary Power Systems	II-30
	8. Electrical Control Building Design	II-32
	9. Protection and Grounding	II-35
	C. MECHANICAL SYSTEM DESIGN	II-36
	1. Constraints for Mechanical Design	II-36
	2. Field Layout	II-41
	3. Manifold	II-41
	4. Thermal Loop (Delta-T Loop)	II-42
	5. Expansion Tank (ET-1)	II-43
	6. Cooling Tower (CT-1, 2)	II-48
	7. Heat Exchanger (HX-1)	II-50
	8. Storage Tank (ST-1)	II-53
	9. Supply Pump (SP-1)	II-58
	10. Circulation Pump (CP-1)	II-64
	D. INSTALLATION PROCEDURES	II-79
	1. Transportation and Delivery	II-79
	2. Onsite Organization and Management	II-81
	3. Construction and Assembly	II-81

TABLE OF CONTENTS (Continued)

Chapter		Page
III	ALBUQUERQUE, NEW MEXICO PUBLIC SCHOOL	III-1
	A. INTRODUCTION	III-1
	1. Plant Description	III-1
	2. Design Trade-off Studies	III-1
	3. Generalized Design Concept	III-3
	B. ALBUQUERQUE PUBLIC SCHOOL PV-T SYSTEM ELECTRICAL DESIGN	III-8
	1. Electrical System Overview	III-8
	2. Field Design	III-11
	3. DC Switchgear and Wiring	III-15
	4. Inverters	III-17
	5. AC Power Distribution System	III-19
	6. Control System	III-22
	7. Auxiliary Power Systems	III-22
	8. Electrical Control Building Design	III-22
	9. Protection and Grounding	III-25
	C. DETAILED MECHANICAL SYSTEM DESIGN	III-25
	1. Constraints for Mechanical Design	III-25
	2. Field Layout	III-30
	3. Manifold	III-30
	4. Thermal String (Delta-T String)	III-32
	5. Expansion Tank (ET-1)	III-32
	6. Cooling Tower	III-34
	7. Heat Exchanger (HX-1)	III-35
	8. Load Side Pump Sizing	III-38
	9. Circulation Pump (CP-1)	III-42
	D. INSTALLATION PROCEDURES	III-50
	1. Transportation and Delivery	III-51
	2. Onsite Organization and Management	III-52
	3. Construction and Assembly	III-53

TABLE OF CONTENTS (Continued)

Chapter		Page
IV	FRESNO, CALIFORNIA HOSPITAL	IV-1
	A. INTRODUCTION	IV-1
	1. Plant Description	IV-1
	2. Design Trade-Off Studies	IV-1
	3. Generalized Design Concept	IV-7
	B. FRESNO HOSPITAL PV-T SYSTEM ELECTRICAL DESIGN	IV-9
	1. Electrical System Overview	IV-9
	2. Field Design	IV-14
	3. DC Switchgear and Wiring	IV-14
	4. Inverter	IV-15
	5. AC Power Distribution System	IV-15
	6. Control Systems	IV-15
	7. Auxiliary Power Systems	IV-15
	8. Electrical Control Building Design	IV-16
	9. Protection and Grounding	IV-16
	C. DETAILED MECHANICAL SYSTEM DESIGN	IV-16
	1. Constraints for Mechanical Design	IV-16
	2. Field Layout	IV-21
	3. Manifold	IV-21
	4. Thermal String (Delta-T String)	IV-23
	5. Expansion Tank (ET-1)	IV-23
	6. Cooling Tower	IV-25
	7. Heat Exchanger (HX-1)	IV-27
	8. Thermal Storage	IV-29
	9. Load Side Pump Sizing	IV-32
	10. Circulation Pump (CP-1)	IV-38
	D. INSTALLATION PROCEDURES	IV-47
	1. Transportation and Delivery	IV-47
	2. Onsite Organization and Management	IV-49
	3. Construction and Assembly	IV-50
V	TRADE-OFF STUDIES	V-1
	A. INTRODUCTION	V-1
	B. DIXON, CALIFORNIA MEAT-PACKING PLANT	V-1
	C. ALBUQUERQUE, NEW MEXICO SCHOOL	V-10
	D. FRESNO, CALIFORNIA HOSPITAL	V-13

TABLE OF CONTENTS (Continued)

Chapter		Page
VI	CONCLUSIONS	VI-1
	A. DESIGN STUDIES	VI-1
	1. Electrical Design	VI-1
	2. Mechanical Design	VI-1
	B. TRADE-OFF STUDIES	VI-2

LIST OF ILLUSTRATIONS

Figure		Page
II-1	Dixon, California Meat-Packing Plant Thermal Load Profile to be Supplied by the PV-T System	II-2
II-2	Dixon Meat-Packing Plant Thermal Energy Flow	II-3
II-3	LCCR Versus Number of Rows for No Storage and for Various Arrays Per Row and Coolant Flow Rates Per Row	II-5
II-4	LCCR Versus Number of Rows for 10 Arrays Per Row and for Various Storage Sizes	II-7
II-5	Overall System Conceptual Design for the Dixon, California Meat-Packing Plant	II-8
II-6	DC Operating Voltage Variation for Dixon PV-T System	II-18
II-7	System Tracking Control Flow Diagram	II-29
II-8	Pressure Drop Across One Delta-T Loop with a Total Flow Rate of 360 gpm	II-44
II-9	Piping Schematic	II-45
II-10	Specific Gravity of Aqueous Solutions of Ethylene Glycol	II-46
II-11	Cooling Tower Conditions and Temperature Diagram	II-48
II-12	Cooling Tower Conditions and Temperature Diagram with Flow Bypass	II-49
II-13	Industrial Fluid Cooler	II-51
II-14	Plate and Frame Heat Exchangers	II-51
II-15	Inlet and Outlet Temperature for HX-1	II-52
II-16	Tempering Schematic	II-54
II-17	Cost Trade-Off for Heat Exchanger and Storage Tank	II-56
II-18	Tempering & Pressure Drop Schematic	II-60
II-19	Suction Level for a "Can-Type" Pump	II-63

LIST OF ILLUSTRATIONS (Continued)

Figure		Page
II-20	Pump Curve for SP-1	II-64
II-21	Flow Resistance Network for the Dixon Plant	II-65
II-22	Collector Field Layout and Flow Resistance Network	II-66
II-23	SUPERCHANGER Specification Sheet	II-70
II-24	System and Pump Head Curves	II-74
II-25	Vapor Pressure of Ethylene Glycol Water Mixtures	II-73
II-26	Combined Pump Performance Curves for a Single-Stage Horizontal Split Case Double-Suction Pump (Peerless Type AD Pump)	II-76
II-27	Characteristic Pump Head Curves for Peerless Model 3AD10, 3500 rpm Pump	II-77
II-28	Horizontal Split Case, Single-Stage, Double-Suction Pump	II-78
III-1	Typical School Flow Schematic	III-2
III-2	Array Size Versus LCCR FOR Various Storage Volumes and Row Lengths	III-4
III-3	Overall Conceptual Design for the Albuquerque, New Mexico School	III-5
III-4	DC Operating Voltage Variation for the Albuquerque Public School PV-T System	III-14
III-5	Piping Schemtic	III-32
III-6	Cooling Tower Conditions	III-35
III-7	Heat Exchanger Design Conditions	III-37
III-8	Flow System for Pump Sizing and Head Loss Calculation	III-38
III-9	Pump Characteristics and System Operational Heads	III-43
III-10	Flow Resistance Network for the Fresno Hospital	III-44

LIST OF ILLUSTRATIONS (Continued)

Figure		Page
III-11	Collector Field Layout for Flow Resistance Calculations	III-44
III-12	System and Pump Head Curves for Field Circulation Pumps (CP-1)	III-48
III-13	Characteristic Pump Head Curves for Worthington Model 1-1/2 LLR-10, 1760 rpm Pump	III-49
IV-1	Hospital Flow Schematic	IV-2
IV-2	Array Size Versus LCCR for Various Flow Rates through Storage (m^3) and a Storage Volume of 34 m^3 (Row Length is 9 LFF Arrays/Row)	IV-4
IV-3	Array Size Versus LCCR for Various Flow Rates through Storage (m^3) and a Storage Volume of 68 m^3 (Row Length is 9 LFF Arrays/Row)	IV-5
IV-4	Array Size Versus LCCR for Various Flow Rates through Storage (ms) and a Storage Volume of 101 m^3 (Row Length is 9 LFF Arrays/Row)	IV-6
IV-5	Overall Conceptual Design for the Fresno, California Hospital	IV-8
IV-6	Piping Schematic	IV-24
IV-7	Cooling Tower Conditions	IV-26
IV-8	Heat Exchanger Design Conditions	IV-28
IV-9	Storage Tank Configuration for Fresno, California Hospital	IV-31
IV-10	Flow System for Pump Sizing and Head Loss Calculations	IV-32
IV-11	Pump Characteristics and System Operational Heads	IV-39
IV-12	Flow Resistance Network for the Fresno, California Hospital	IV-40
IV-13	Collector Field Layout for Flow Resistance Calculations	IV-40
IV-14	System and Pump Head Curves for Field Circulation Pump (CP-1)	IV-45

LIST OF ILLUSTRATIONS (Continued)

Figure		Page
IV-15	Characteristic Pump Head Curves for Worthington Model 1-1/2 LLR-7, 3530 rpm Pump	IV-46
V-1	Heat Exchanger Sizing Study for the Dixon Meat-Packing Plant	V-2
V-2	Sell-Back Ratio Study for the Dixon Meat-Packing Plant	V-4
V-3	Collector Cost Study for the Dixon Meat-Packing Plnat	V-5
V-4	Cell Efficiency Study at a Collector Cost of $585/m^2	V-6
V-5	Load Phase Shift Study for the Dixon Meat-Packing Plant	V-7
V-6	Study of Ratio of Electrical to Thermal Annual Load Requirements for the Dixon Meat-Packing Plant	V-8
V-7	Site Study for the Dixon Meat-Packing Plant	V-9
V-8	Heat Exchanger Sizing Study for the Albuquerque School	V-11
V-9	Sell-Back Ratio Study for the Albuquerque School	V-12
V-10	Collector Cost Study for the Albuquerque School	V-14
V-11	Cell Efficiency Study at a Collector Cost of $365/m^2 for the Albuquerque School	V-15
V-12	Study of Ratio of Electrical to Thermal Annual Load Requirements for the Albuquerque School	V-16
V-13	Heat Exchanger Sizing Study for the Fresno Hospital	V-18
V-14	Collector Cost Study for the Fresno Hospital	V-19
V-15	Cell Efficiency Study at a Collector Cost of $385/m^2 for the Fresno Hospital	V-20
V-16	Study of Ratio of Electrical to Thermal Annual Load Requirements for the Fresno Hospital	V-21

LIST OF TABLES

Table		Page
II-1	DIXON MEAT-PACKING PLANT ANNUAL INSOLATION, ELECTRICAL AND THERMAL ENERGY CHARACTERISTICS	II-9
II-2	MAJOR PPS ELECTRICAL COMPONENTS	II-11
II-3	DC OPERATING VOLTAGE MATRIX FOR DIXON PV/T SYSTEM	II-17
II-4	INVERTER SPECIFICATIONS	II-24
II-5	DIXON PLANT P+ID SPECIFICATIONS	II-37
II-6	FLUID VOLUME INVENTORY	II-45
II-7	EXPANSION TANK PRESSURES	II-47
II-8	HEAT EXCHANGER SIZING AND COSTING	II-53
II-9	STORAGE TANK PARAMETERS FOR VARIOUS INLET FLOW RATES	II-55
II-10	PHYSICAL PROPERTIES OF 36 MIL REINFORCED HYPALON	II-59
III-1	ALBUQUERQUE SCHOOL ANNUAL INSOLATION, ELECTRICAL AND THERMAL ENERGY CHARACTERISTICS	III-7
III-2	MAJOR PPS ELECTRICAL COMPONENTS	III-9
III-3	DC OPERATING VOLTAGE MATRIX FOR ALBUQUERQUE PUBLIC SCHOOL PV/T SYSTEM	III-13
III-4	INVERTER SPECIFICATIONS	III-20
III-5	ALBUQUERQUE SCHOOL P&ID SPECIFICATIONS	III-26
III-6	FLUID VOLUME INVENTORY	III-33
III-7	MINOR HEAT LOSS COMPONENTS AND EQUIVALENT LENGTHS	III-40
III-8	PUMP FLOW AND HEAD REQUIREMENTS	III-42
IV-1	FRESNO, HOSPITAL ANNUAL INSOLATION, ELECTRICAL AND THERMAL ENERGY CHARACTERISTICS	IV-10
IV-2	MAJOR PPS ELECTRICAL COMPONENTS	IV-12

LIST OF TABLES (Concluded)

Table		Page
IV-3	FRESNO HOSPITAL P+ID SPECIFICATIONS	IV-17
IV-4	FLUID VOLUME INVENTORY	IV-24
IV-5	MINOR HEAD LOSS COMPONENTS AND EQUIVALENT LENGTHS IN PUMP LINES	IV-36
IV-6	PUMP FLOW AND HEAD REQUIREMENTS	IV-38
V-1	BASE CASE DESIGN PARAMETERS, FOR THE DIXON, CALIFORNIA MEAT-PACKING PLANT	V-3
V-2	BASE CASE DESIGN PARAMETERS FOR THE ALBUQUERQUE, NEW MEXICO SCHOOL	V-10
V-3	BASE CASE DESIGN PARAMETERS FOR THE FRESNO, CALIFORNIA HOSPITAL	V-17

CHAPTER I
INTRODUCTION

In this volume a reference design is developed for an optimally sized PV/T system for the three applications selected as most promising. These include the Dixon, California meat-packing plant; the Fresno, California hospital; and the Albuquerque, New Mexico school. These designs were based on actual plant operational procedures and requirements in the case of the meat-packing facility, and the typical hospital and school HVAC systems as determined by visits to such facilities in the Albuquerque area. Trade-off studies based on these three designs were performed and are presented in chapter V.

Load profiles for the school and hospital were not available so these profiles were developed using TMY data and standard ASHRAE methods as described in volume I. The load profile for the meat-packing plant was developed based on plant operating procedures and requirements as specified by the plant engineer. Since none of the applications lent themselves to a roof mounted system, it was assumed that sufficient land area was available to install the optimum size system as determined by SOLCEL performance simulations.

The SOLCEL simulations were all performed for a line focus Fresnel (LFF) concentrator using the economic data presented in volume I. A sell-back ratio of 0.75 was assumed for all systems. Initial calculations were performed to determine the appropriate row length and flow rate. It was found that the row length had little effect on the life cycle cost ratio (LCCR) or the total field size. We also found that decreasing the flow rate from 10 to 15 gpm (6.31×10^{-4} m^3/sec to 3.16×10^{-4} m^3/sec) per row decreased the LCCR slightly; however, we decided not to decrease the flow rate further since at lower flow rates the temperature rise along a collector row would become excessive causing unacceptable voltage mismatch losses.

Subsequent to these calculations we found that E-Systems LFF can withstand a maximum fluid pressure of about 100 psig. Assuming

reasonable pressure drops through the balance of the system (piping, heat exchanger, cooling tower, valves, etc.), this meant a maximum row length of 11 collector arrays at 5 gpm (3.16×10^{-4} m^3/sec) . Thus, in the system designs the flow rate has been chosen at 5 gpm (3.16×10^{-4} m^3/sec) , and the row length at nine or 10 LFF arrays per delta-T string.

In the following chapters each application is described, the trade-off studies used to size the field are described, and the detailed system design is provided along with design calculations. Engineering drawings are included at the end of each chapter for the appropriate application and system.

CHAPTER II
DIXON, CALIFORNIA MEAT-PACKING PLANT

A. INTRODUCTION

1. Plant Description

The Dixon, California meat-packing plant is owned by Armour Food Company, a division of the Greyhound Corporation which is one of the country's largest meat-packing concerns. To obtain the plant energy requirements and operating procedures we talked to Mr. David Brown, the plant manager, and Mr. K. M. Ries, manager of energy programs at Greyhound corporate headquarters in Phoenix. The Dixon plant is engaged primarily in lamb slaughter and packing. It also processes a lesser amount of beef. Although the plant slaughters approximately 10 percent of the nation's lamb, the total operation is too small to utilize a rendering facility. This makes the plant very suitable to a PV-T application since steam is not required for rendering but is used primarily to produce hot water for cleanup.

The plant operates 5 days a week with a full shift from 8 a.m. to 9 p.m., a reduced shift from 9 p.m. to midnight, and cleanup from midnight to 8 a.m. A large amount of cleanup water is used just before the morning shift begins. The peak electrical demand for the Dixon plant is approximately 500 kWe. About one-third of the electrical demand (150 kWe) is for powering vapor compression refrigeration 24 hours per day 7 days per week. The rest is used during the full and partial shifts to provide power for the conveyor system in the plant and to drive a high pressure air supply used to drive pneumatic knives. The plant currently generates 5,000 lbs/hr (2268 kg/hr) of 100-psia (0.67 MPa) steam, used primarily to produce 140°F (60°C) water for plant cleanup. In addition, some steam is used for knife sterilization during the slaughtering operation. The current load profile for steam generation is shown in volume I.

All electricity is purchased from a local utility while the steam is generated onsite using natural gas with number 2 diesel fuel as backup. The current overall annual electric to thermal ratio is 0.246. Based on conversations with the plant managers we found that, on the average, 197 gpm (0.012 m^3/sec) of 140°F (60°C) water is required for cleanup between 6 a.m. and midnight, and 113 gpm (0.0071 m^3/sec) between midnight and 6 a.m. The cleanup water is discarded and the makeup water enters the heat exchanger at 65°F (18.3°C). Based on these requirements, a thermal load profile to be supplied by the PV-T system was developed and is shown in figure II-1. The electrical load profile is shown in volume I (figure III-17). The general plant configuration is shown in figure II-2.

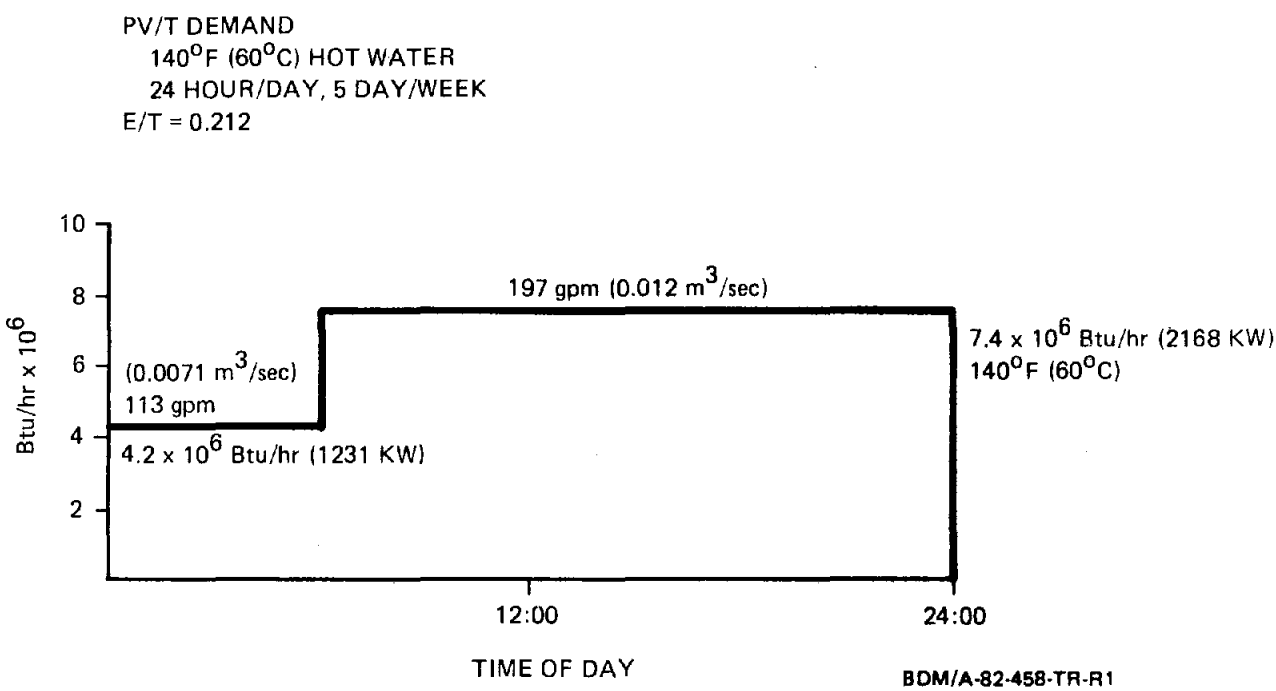

Figure II-1. Dixon, California Meat-Packing Plant Thermal Load Profile to be Supplied by the PV-T System

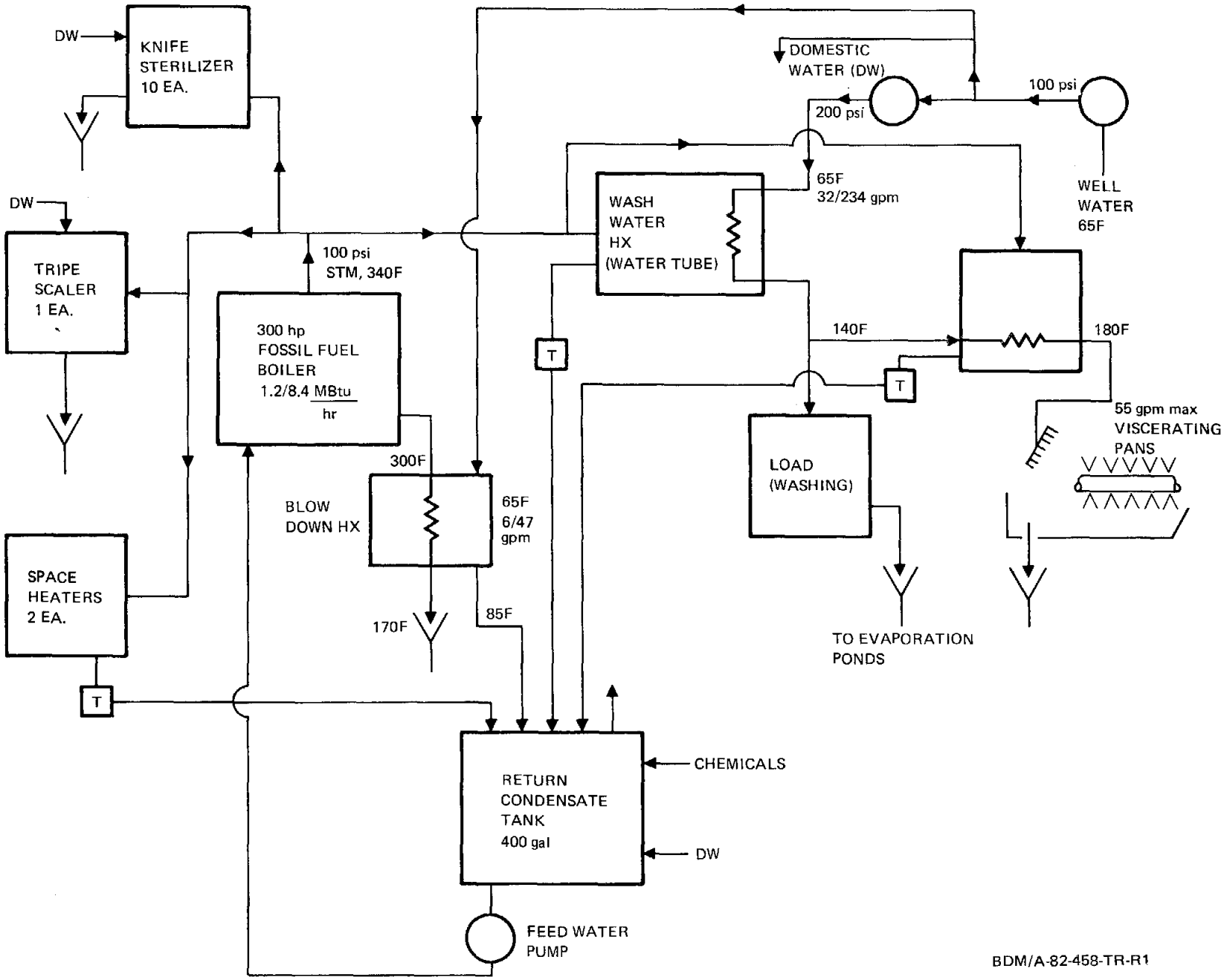

Figure II-2. Dixon Meat-Packing Plant Thermal Energy Flow

The Dixon plant is located in a good insolation area and is situated on approximately 50 acres (200,000 m^2) of land, close to half of which could be available for collectors. The majority of buildings at the site are not structurally suitable for collector installation.

2. Design Trade-Off Studies

Using the electrical and thermal loads to be displaced by the PV-T system, several design trade-off studies were performed using SOLCEL-III. These included trade-offs with respect to row length (i.e., the number of E-Systems four-module arrays per row), flow rate, and storage size.

Initial calculations were made without storage and assuming row lengths of 12 and 24 arrays with flow rates of 5 to 10 gpm (3.16×10^{-4} to 6.31×10^{-4} m^3/sec). The results of these calculations, shown in figure II-3, indicate that the lower flow rates improve the LCCR slightly, and decreasing the number of arrays per row has an even smaller effect. Because we did not want an excessive temperature rise along the row, we limited the flow rate to 5 gpm (3.16×10^{-4} m^3/sec).

For the initial storage and field sizing calculations, the storage tank was assumed to operate between 65°F (18.3°C) (the temperature of the makeup water) and the annual average outlet temperature of the array. The average outlet temperature of the field, averaged over the year, with 10 arrays per row and 5 gpm (3.16×10^{-4} m^3/sec) is 160°F (71.1°C). Thus, the relation between storage volume and energy stored is:

$$Q_s = 645.6\ V\ (160 - 65) = 6.133 \times 10^4 V$$

where V is the tank volume in m^3 and Q_s is the stored energy in watt hours. For the SOLCEL simulation a storage tank size was assumed in terms of energy (or watt hours) and was treated as an energy bin; any energy produced by the PV-T system in excess of the load was placed in storage. If storage was full the excess energy was dissipated in the

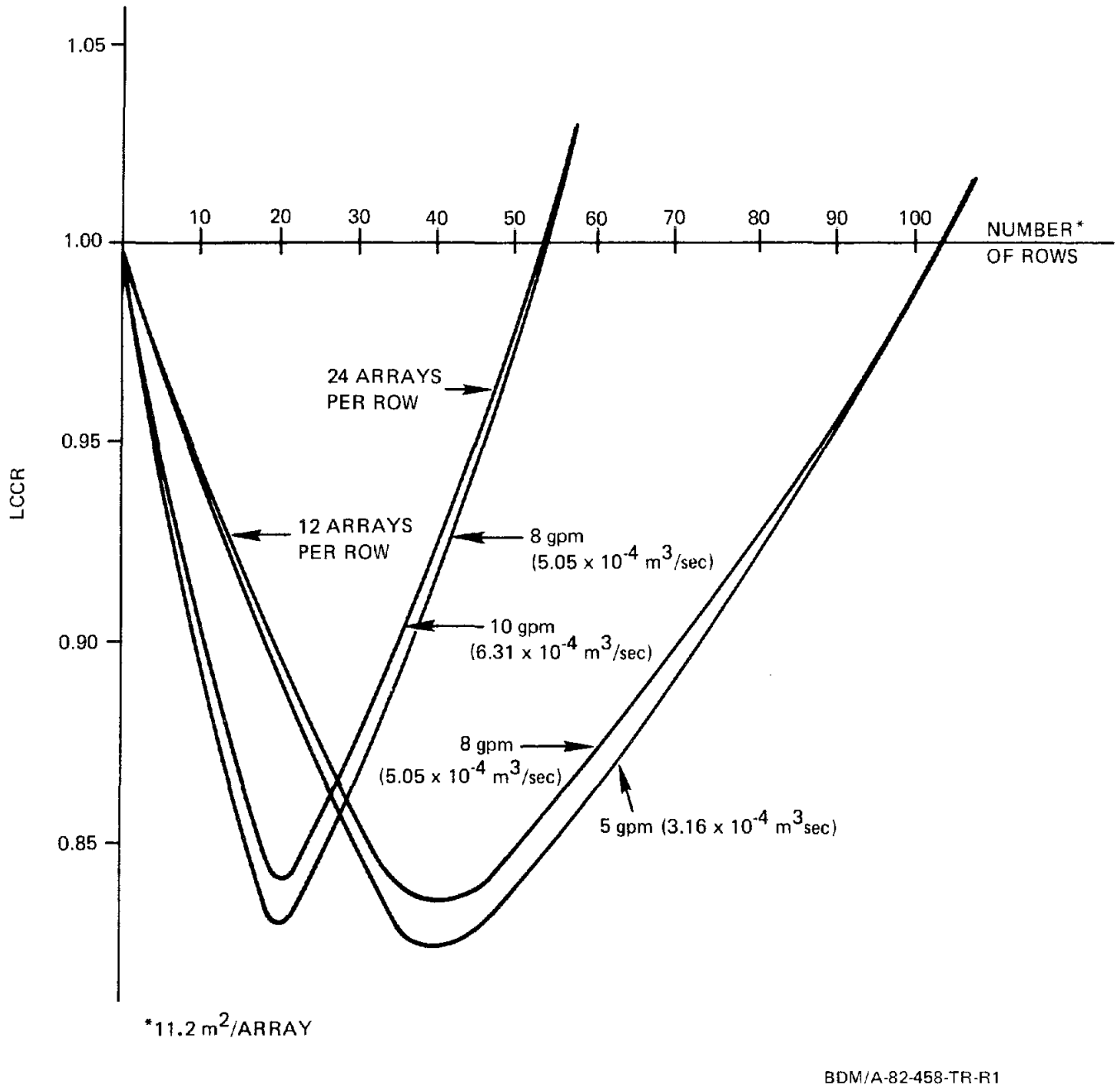

BDM/A-82-458-TR-R1

Figure II-3. LCCR Versus Number of Rows for No Storage and for Various Arrays Per Row and Coolant Flow Rates Per Row

cooling tower. For a given storage size the volume was calculated from the above relation and the storage cost determined from the relation:

$$C_s = \$750(V)^{0.8}$$

The results of the storage calculations are shown in figure II-4. Increasing storage significantly decreased the LCCR and increased the field size. The storage size chosen for this design was 11.6 MWh with a volume of approximately 50,000 gallons (190 m^3) . A larger size did not improve the LCCR significantly and was felt to be too large in volume.

The basic design selected for the Dixon plant was a field of 720 collectors, 72 rows of 10 LFF arrays per row. The storage was sized to contain 11.6 MWh of energy and the flow rate through each row was 5 gpm (3.16×10^{-4} m^3/sec).

3. Generalized Design Concept

The overall system conceptual design is shown in figure II-5. Parasitic electrical power associated with the pumps, cooling tower and PV-T tracking system is added to the existing electrical load. If the array outlet temperature (TFO) is greater than 210°F (98.9°C) the flow is routed through the cooling tower to decrease the array inlet temperature. The flow rate through the array and the heat exchanger is constant. The flow through the load is variable and intermittent depending on the required washing operation. The flow through the heat exchanger is slightly greater than the average daytime load flow rate so that thermal storage may be charged for use after sundown. The load water is wasted and makeup water equals the entire load requirement. Makeup water is from the city mains and enters the system at 65°F (18.3°C) .

The SOLCEL simulations indicate the annual electrical and thermal energy characteristics of the system as shown in table II-1. The array electrical efficiency (energy provided to the load, parasitics and sell-back versus available insolation) is 11 percent. The system thermal efficiency (energy provided to the load versus insolation) is 37 percent.

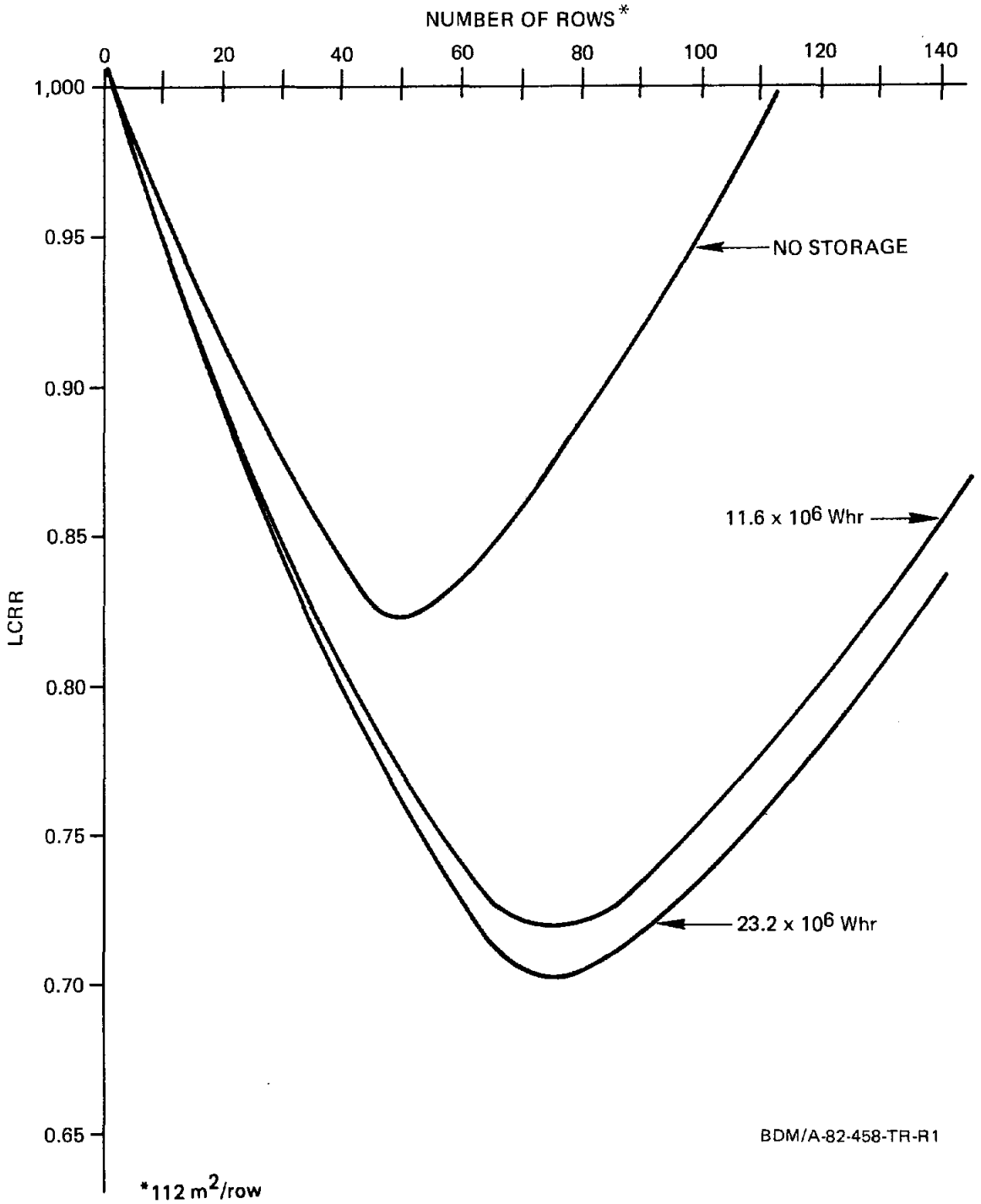

Figure II-4. LCCR Versus Number of Rows for 10 Arrays Per Row and for Various Storage Sizes

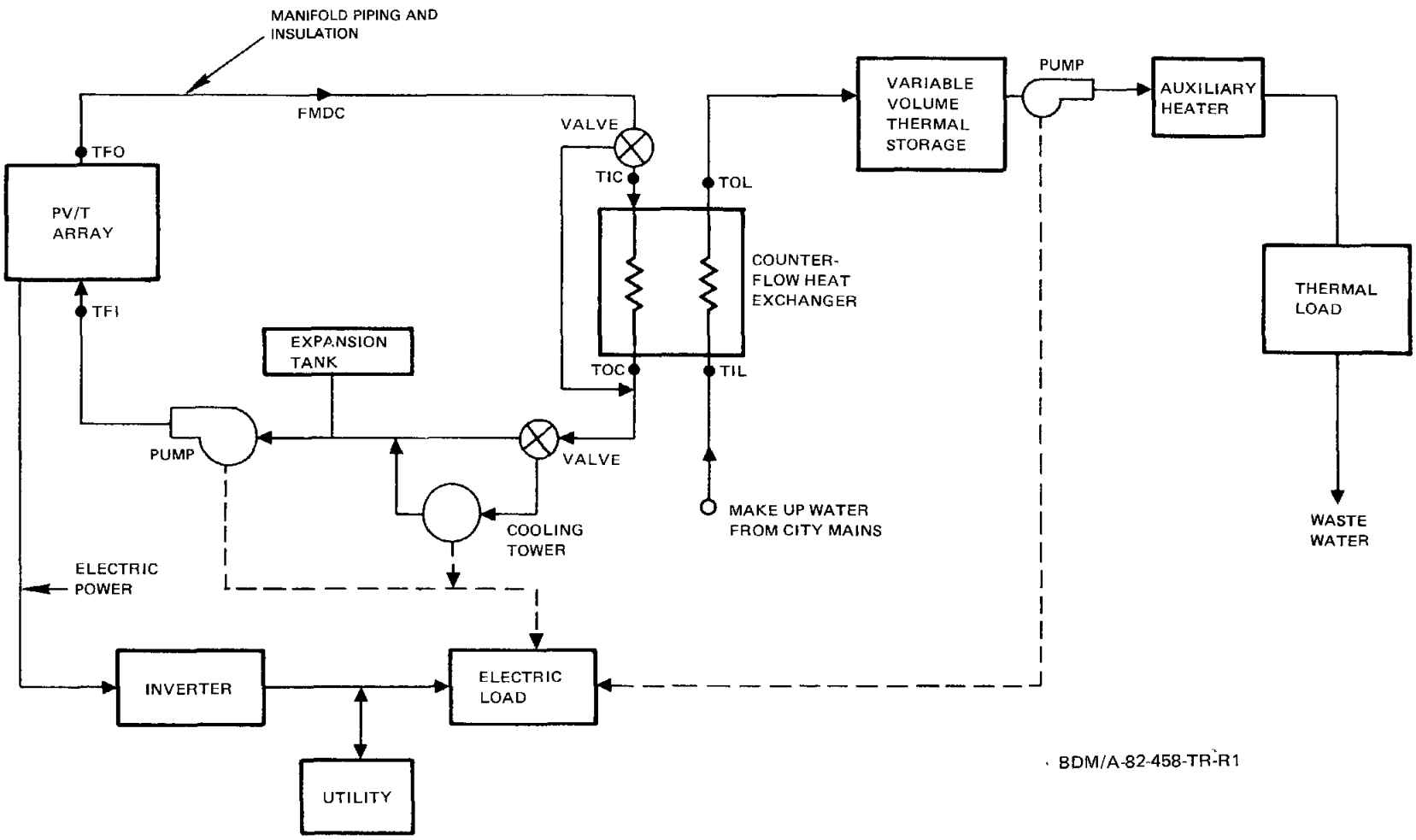

Figure II-5. Overall System Conceptual Design for the Dixon, California Meat-Packing Plant

TABLE II-1. DIXON MEAT-PACKING PLANT ANNUAL INSOLATION, ELECTRICAL AND THERMAL ENERGY CHARACTERISTICS

INSOLATION (kW-hrs)	
Total Direct Normal Radiation Available	1.9×10^7
ELECTRICAL CHARACTERISTICS (kW-hrs)	
Electrical Load	2.253×10^6
Total Array DC Electrical Energy	2.33×10^6
Array AC Electrical Energy to Load	1.166×10^6
Backup AC Energy to Load	1.087×10^6
Electrical Parasitic	8.03×10^4
Sold Back AC Energy	8.33×10^5
THERMAL CHARACTERISTICS (kW-hrs)	
Thermal Load	1.2095×10^7
Total Array Thermal Energy	9.83×10^6
Array Thermal Energy Directly to Load	4.96×10^6
Array Thermal Energy to Storage	2.67×10^6
Stored Thermal Energy to Load	2.22×10^6
Backup Thermal Energy	4.92×10^6
Heat Rejected at Cooling Tower	3.27×10^4
LOAD DISPLACEMENT AND EFFICIENCIES	
Percent of Electrical Load Displaced	52 %
Percent of AC Electrical Energy Sold Back	40 %
System Conversion Efficiency (DC to AC)	89 %
Array Electrical Efficiency	11 %
Percent of Thermal Load Displaced	59 %
System Thermal Efficiency	37 %

In the following sections a detailed system design is provided along with the analyses used to design the system and choose and size components. Although the sections have been divided into electrical and mechanical design, several iterations were performed to determine the proper row length based on voltage and current requirements, temperature increases, and voltage mismatch losses due to the temperature increase along a row. These trade-offs should become clear in the following sections.

B. ELECTRICAL SYSTEM DESIGN

The following sections summarize the electrical design. The text is keyed to electrical drawings E-1 through E-7 contained at the end of this chapter.

1. Electrical System Overview

A block diagram of the photovoltaic power system (PPS) for the Dixon plant PV-T design is shown in drawing E-1. The DC output of the PV system is rated as 543 V and 1.830 kA (994 kW) at 1000 W/m^2 with an inlet fluid temperature of 25°C and a temperature rise from inlet to outlet of 50°C. The expected AC output of the system is 875 kW assuming an overall power conditioning efficiency of 88 percent. It operates interactively with the electric utility service. The output voltage is 277/480 VAC, three phase, four wire. The elements in the block diagram will be described briefly in this section and presented in more detail in subsequent sections with rationale for component selection. Critical electrical components are specified on the appropriate drawing and summarized in table II-2.

The DC portion of the PPS consists of two fields supplying separate 500-kW inverters. Each field is divided into nine subfields. A subfield consists of four electrical loops and a subfield maintenance and safety (M&S) enclosure. Each electrical loop contains 10 E-Systems linear Fresnel lens arrays. (The term array is used by E-Systems to describe a single frame assembly supporting four linear Fresnel lens

TABLE II-2. MAJOR PPS ELECTRICAL COMPONENTS

ITEM NO.	SUBSYSTEM/ITEM DESCRIPTION	(MFR.) PART NO. (OR EQUIVALENT)	QTY.
1.0	Subfield Maintenance and Safety Enclosure/NEMA 3R Enclosure (48"H x 36"W x 18"D)		18
1.1	Resistor, 98 KΩ, 1 W, 1%	(Dale) WWA-416	144
1.2	Resistor, 2 kΩ, 0.1 W, 1%	(Dale) EMF-50-10	144
1.3	Resistor, 0,1Ω, 100 W, 1%	(Dale) RH-100	72
1.4	Safety Switch, 3 Pole, 600 VDC, 30 A	(Square D) HU-361	72
1.5	Varistor, 420 V	(GE) V320-PA-40A	144
1.6	Blocking Diode, 1200 V, 70 A	(IR) IRKE 71-12	144
1.7	Busbar, 200 A		54
2.0	Subfield Maintenance Switch Safety Switch, 2 Pole, 600 VDC, 200 A, Outdoor	(Square D) HU-364RB	18
3.0	Field Maintenance and Safety Enclosure/NEMA 1 Enclosure (72"H x 72"W x 14"D)		2
3.1	Varistor, 420 V	(GE) V320-PA-40A	36
3.2	Safety Switch, 2 Pole, Fusible, 600 VDC 200 A with 150 A Fuse	(Square D) H-264	18
3.3	Safety Switch, 2 Pole, 600 VDC, 200 A	(Square D) HU-264	18
3.4	DC Current Transducer	(DSI) CT2-00LT	36
3.5	Rotating Switch, 10 Position		4
3.6	Ammeter		4

TABLE II-2. MAJOR PPS ELECTRICAL COMPONENTS (Continued)

ITEM NO.	SUBSYSTEM/ITEM DESCRIPTION	(MFR.) PART NO. (OR EQUIVALENT)	QTY.
4.0	Field Maintenance Switch/ Safety Switch, 2 Pole, 600 VDC, 1200 A	(Square D) HU-268	2
5.0	DC-AC Inverter, 500 kW, 480 VAC, 3 Phase, 4 Wire	(DECC) 61306	2
6.0	AC Switchgear Enclosure/ Circuit Breaker Enclosure (92"H x 55"W x 72"D)		1
6.1	Circuit Breaker, 480 VAC, 3 Phase, 800 A	(WEC) DS-206	2
6.2	Circuit Breaker, 480 VAC, 3 Phase, 1600 A	(WEC) DS-416	1
7.0	Utility Interface Breaker Enclosure/Circuit Breaker Enclosure (92"H x 55"W x 72"D)		1
7.1	PPS Circuit Breaker, 480 VAC, 3 Phase, 1600 A	(WEC) DS-416	1
7.2	Utility Circuit Breaker, 480 VAC, 3 Phase, 1600 A, with Remote Electrical Operator	(WEC) DS-416 w.E.O.	1
8.0	Subfield Transformer, 480/120 V Single Phase, 5 kVA, Outdoor Type	(SORGEL) 5S40F-0	18
9.0	Interruptible Power Supply/ Diesel Generator Set, 100 kW with 6-Cylinder, 516 cu. in. Engine, 225 A-H, 24 V, GEL-CELL Batteries, 100 gal Fuel Tank	(ONAN) 100.0 DYC-15R	1

TABLE II-2. MAJOR PPS ELECTRICAL COMPONENTS (Concluded)

ITEM NO.	SUBSYSTEM/ITEM DESCRIPTION	(MFR.) PART NO. (OR EQUIVALENT)	QTY.
10.0	Uninterruptible Power Supply/ Inverter, 3 kVA, 120 VAC, 1 Phase, 60 Hz with GEL-CELL Sealed Batteries and Rectifier, 120 VAC to 133 VDC	(Gould) 5247A-1	1
11.0	Master Controller and Hazard Station/(Includes Microcomputer and Hazard Relays)	Not Defined	1

collectors. Therefore, we have also used this nomenclature and defined the total number of arrays interfacing with an inverter as a field.) Each subfield M&S enclosure includes an externally-mounted safety switch which together provide for interconnection of the four electrical loops, measurement of electrical loop parameters, isolation of the subfields and of each individual loop, and protection from lightning and other transients.

Nine sets of DC field cables are routed to each field M&S enclosure located in the electrical control building. Each field M&S enclosure provides for interconnection of the nine subfields, measurement of subfield electrical parameters, DC switchgear and lightning protection. The 500 kW inverters convert the DC power into 277/480-VAC, three--phase, four-wire, 60-Hz power. The inverters also contain DC and AC monitoring and protection switchgear. The AC outputs of the inverters are combined through circuit breakers in the PPS AC switchgear enclosure. The PPS AC power is then routed to the Dixon plant. The public utility enters the plant through two meters. The meters are connected in opposite directions to measure the flow out of and into the utility. The utility service and the PPS are interconnected through circuit breakers in the utility interface breaker enclosure. The combined AC power is routed to the main AC panelboard which supplies the building loads and also the AC power for the PPS. A meter is provided between the utility interface switch and the main AC panelboard to measure the total power required by the Dixon plant and the PPS. The main AC panelboard indicated in the drawing is part of the standard plant equipment.

The AC power for the PPS is routed to the AC panelboard in the electrical control building. A meter on this line measures the power required by the PPS. The AC power is stepped down as appropriate for the various electrical control building and field power requirements.

2. Field Design

a. Determination of PV-T Field Size and Layout

Sizing trade-off analyses performed using the SOLCEL-II computer code indicated that the lowest life cycle cost for the system

would be obtained using 720 E-Systems arrays arranged in 10- to 12-array loops with a differential in inlet to outlet fluid temperature of 50°C at 1000 W/m^2. Because the large number of rows required would produce an elongated field which would produce large power losses due to long thermal and electrical runs, it was decided to break the field into two sections arranged side by side to produce an almost square field. For ease of maintenance, it was decided to divide each loop into two rows so that the inlet and outlet piping are all in the center of each field. The thermal design considerations are discussed in more detail in section II-C.

The electrical design and layout shown in drawing E-2 is based on the PV system interface with the DC-AC inverter and on a parametric analysis performed using the PV-TAP code, which was presented in volume III. In this analysis it was shown that to prevent excessive losses due to temperature differences the series string of cells needed to provide the operating voltage necessary for the inverter should not extend beyond one thermal loop. This restriction also reduces the wiring runs and simplifies the wiring scheme. Thus, it is desirable to design the electrical series string to correspond with the thermal loop. Because the total field size results in a power of 994 kW with the fluid temperature differential of 50°C, it was decided to use two 500-kW inverters available from the Delta Electronic Control Corporation (DECC). The inverter selection rationale and specifications are presented in subsection 4 of this electrical section. The inverter has a nominal input operating voltage range of 425 to 600 V. It is desirable to operate the array near the midpoint of this voltage range. Since each of the E-Systems collectors shown in the array detail in drawing E-2 produces 30.1 V and 12.7 A at 25°C constant fluid temperature, only 5 arrays (20 collectors) connected in series would produce the 600-V maximum allowable voltage for the inverter. However, since significant voltage will be lost due to cell temperature mismatch for the case of a fluid temperature differential of 50°C, the 600 V would never be achieved. Since no satisfactory voltage could be obtained by series/parallel combinations of 12

arrays, it was decided to use the 10-array option with two collectors connected in parallel by two in series in each array, as shown in drawing E-2, to obtain the 20 series collectors needed to produce the 600 V.

The PV-TAP parametric analyses noted above also quantified the power and voltage losses for various array configurations and temperature differentials. These analyses indicate that the string voltage loss is proportional to temperature and will be 9.8 percent for the 50°C fluid temperature differential resulting in a string voltage of aproximately 543 V. In this arrangement, collectors are electrically connected within an array by first connecting two collectors in parallel and then connecting two such groups in series. Thus, all 10 arrays are required to develop the 543 V.

An alternative design was also considered, connecting all four collectors within an array in series which would develop the full voltage over the five arrays in a row and then connecting two rows in parallel. However, the PV-TAP analysis also indicated that this would result in greater voltage and power losses than the design option chosen. The voltage and power losses from the ideal constant fluid temperature conditions would be approximately 2 percent greater (or 11.8 percent) for the alternate electrical design than for the design chosen.

An additional analysis was performed to determine the DC operating voltage range of the fields under extremes of illumination and temperature to ensure that it remains within the 425 to 600 V operating range of the inverters. It was determined from the SOLCEL runs for the Dixon plant PPS that the inlet temperature of the fluid will fall within the range, 20°C to 50°C, over the course of the year and the insolation will not exceed 1000 W/m^2. Assuming the lower limit of the tracking is 100 W/m^2 and also assuming a temperature differential from fluid to cell of 14°C at 1000 W/m^2, the voltage matrix in table II-3 was developed. The results are shown graphically in figure II-6. The voltage at each fluid temperature peaks at about 300-350 W/m^2 because the higher expected voltage at 1000 W/m^2 is offset by the higher inlet-to-outlet temperature

TABLE II-3. DC OPERATING VOLTAGE MATRIX FOR DIXON PV/T SYSTEM

DC OPERATING VOLTAGE (V)	INSOLATION (W/m^2) 100	200	300	350	400	500	700	800	1000
T_F(INLET) ($^oC/^oK$)	DC OPERATING VOLTAGES (V)								
20/293	581	591	592	592	591	587	576	570	557
25/298	565	575	577	577	576	572	562	556	543
30/303	549	560	562	562	561	558	548	542	529
35/308	533	545	547	547	546	543	534	528	516
40/313	517	529	532	532	531	528	520	514	502
45/318	501	513	517	517	516	514	506	500	489
50/323	485	498	502	502	501	499	491	486	475

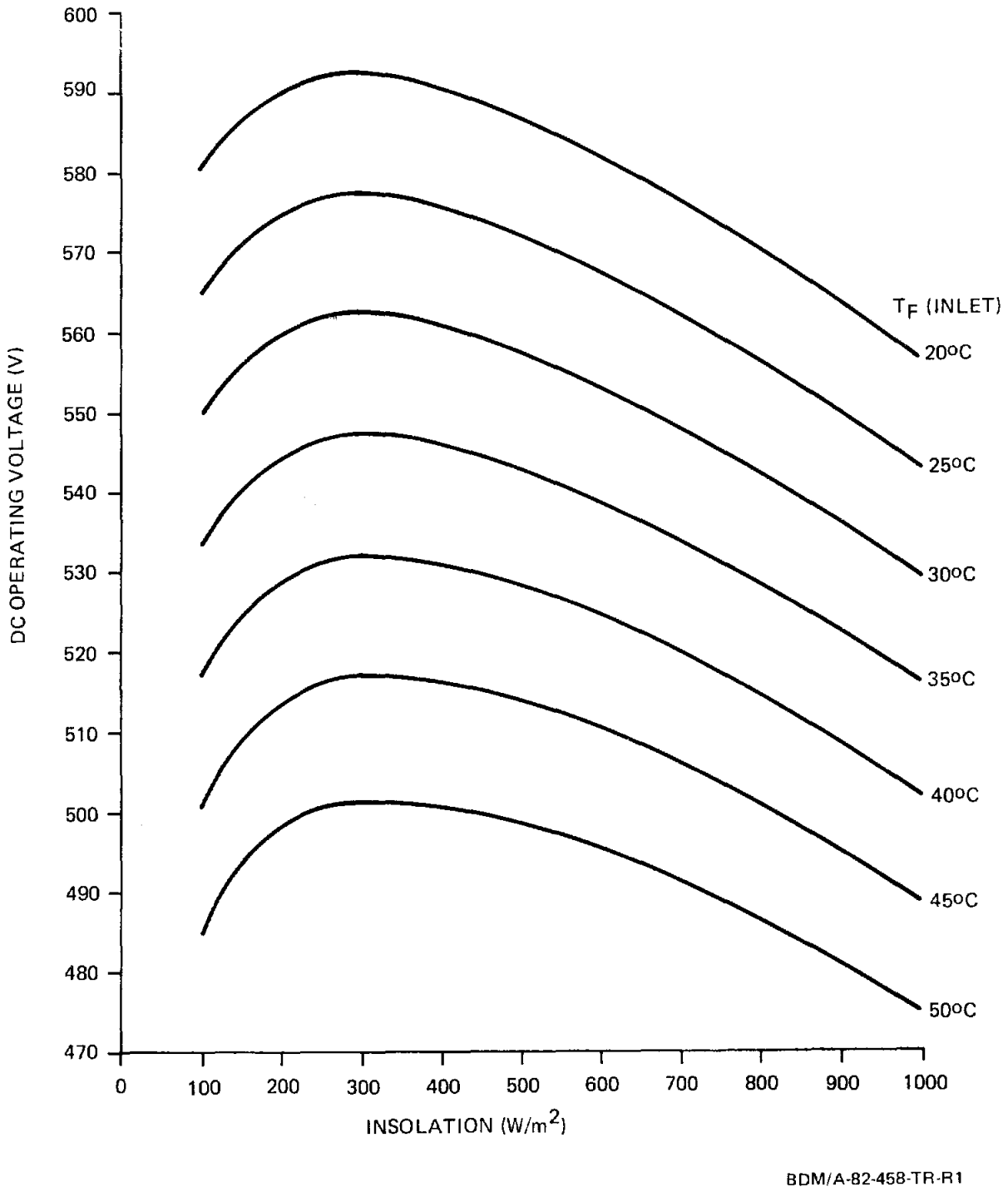

Figure II-6. DC Operating Voltage Variation for Dixon PV-T System

differential which causes the voltage mismatch discussed previously. The lowest voltage is 475 V at 50°C inlet fluid temperature and 1000 W/m^2. The highest voltage is 592 V at 20°C inlet fluid temperature and about 350 W/m^2.

The resulting electrical/thermal loop is shown in drawing E-2. The far end of the loop is center tapped and grounded in the M&S enclosure to limit the voltage excursions above and below ground to less than 360 V.

b. Determination of Subfield Size

Referring again to drawing E-2, each field is divided into nine subfields with four loops per subfield. This specification resulted from the desire to locate summing junction boxes close to the loops to prevent excessive wire runs and to reduce the potential for obstructions which might result from the larger boxes which would be required if six loops were grouped in a subfield. Thus, it was decided to locate this junction box, or the M&S enclosure, near one of the negative termination posts of the second row of each subfield. Thus, four positive, four negative, and four center tap wires are interconnected in this enclosure. The subfield could alternately have been specified as six loops with the subfield M&S enclosure located at the center of the third or fourth row. This would result in only six subfield M&S enclosures per field instead of nine, but would also result in longer DC cable runs within each subfield. Thus, the DC cables would have to be sized larger to prevent voltage and power losses in the cables and subsequent mismatch of loop voltages.

The center taps of the electrical loops are interconnected in each subfield M&S enclosure and connected to ground. After interconnections of positive and negative cables within each subfield M&S enclosure, one set of DC cables (one positive and one negative) is routed to the electrical control building from each subfield M&S enclosure. Details of the subfield enclosure are contained in the following section.

3. DC Switchgear

a. Subfield Maintenance and Safety (M&S) Enclosure

There are 18 subfield M&S enclosures, nine for each field. These enclosures serve as the focal point for interconnecting and routing of DC cables from the individual electrical loops to the inverters, for transient protection of the arrays and DC cables, and for maintenance and troubleshooting of the arrays. Drawing E-3 is a schematic diagram of a typical subfield M&S enclosure. After the positive, negative, and center tap cables from a particular loop are routed into the enclosure, voltage and current monitoring resistors are connected between the cables. The 98-kΩ and 2-kΩ resistors form a voltage divider so that the voltage at the test point will be only 2 percent of the half-loop voltage from ground. The 0.1-ohm current shunt resistor will carry current only if the positive and negative lines are unbalanced due to an array failure or ground fault. Next, a 30-A three-pole switch, defined in the drawing parts list, is provided to isolate the electrical loop for maintenance. This loop maintenance switch is rated at 600 V DC per contact because the open-circuit voltage on either side of ground could reach 360 V under worst case conditions. Therefore, a 250-V rated switch could not be used. The center tap of the loop is grounded on the inverter side of the switch to the M&S enclosure which, in turn, is grounded to the counterpoise system.

Blocking diodes and varistors are incorporated for loop protection. The varistors are provided for lightning protection to prevent high-voltage excursions on either side of ground. The breakdown voltage of the varistors has been sized to exceed the maximum open-circuit voltage which can be generated by either side of the loop so that these varistors will not shunt current during normal operation. The blocking diodes prevent reverse power flow into the loop in the event of either low-level transients from lightning or power conditioning, which do not exceed the breakdown voltage of the varistors, or from shorting failures within the loop itself. The blocking diodes are required on both positive and negative lines because of the loop center tap. The blocking diode breakdown voltage has been sized at 1200 VDC to greatly exceed the normal varistor voltage of 420 V in the event that the latter

rises significantly due to high-frequency transients. This transient increase is typically greater than 100 percent. Since the blocking diode represents a continuous power loss during normal operation, it has been rated to handle twice the normal current of the loop to reduce the forward voltage in operation and as a result the power loss as well.

Beyond the loop protection and monitoring circuitry, the plus, minus, and center tap conductors are connected with the corresponding conductors from the other three loops of the subfield. A 200-A two-pole subfield maintenance switch is provided on the positive and negative output lines. It is mounted in its own enclosure external to the subfield M&S enclosure. This switch is rated at 600 V per contact for the same reasons as are the loop maintenance switches. A two-pole switch is used here instead of a three-pole switch because there is no need to break the center tap line at this point. The output conductors will consist of direct burial cable and will be routed into the ground in conduit and then routed to the electrical control building 2 ft (0.61 m) underground without conduit.

Fuses have not been included in the subfield M&S enclosure design. Fuses are used to prevent exceeding the current capability of the wiring in the case of shorts to ground. The individual loops, however, are protected from reverse power flow from other loops by blocking diodes. The direct burial cable from the subfield M&S enclosure to the electrical control building is protected against reverse current flow from the other subfield in the case of shorts to ground and from lightning and other transients by fuses located in the electrical control building as discussed in the next section.

b. Field Maintenance and Safety (M&S) Enclosure

The 18 sets of direct burial cables from subfield M&S enclosures are routed to two field M&S enclosures in the electrical control building. The nine pairs of cables from field A are routed to one field M&S enclosure; the nine pairs of cables from field B to the other. A schematic of the field M&S enclosure is shown in drawing E-4. The two field M&S enclosures interface with separate inverters.

Each of the cables entering the field M&S enclosure is protected from lightning surges by a varistor which is grounded to the case. The case is, in turn, grounded to the counterpoise system outside the building. A 200-A two-pole switch, defined in the drawing parts list, is provided for isolating each subfield from the other. Fuses are provided on each line to protect the field cabling against overcurrent conditions from other subfields feeding power into subfield shorts to ground. A second 200-A two-pole switch is included on the other side of the fuse to isolate the fuse from all power if it requires replacement. DC current transducers are placed on each of the 18 lines to measure the current flow in each line. The current transducers interface with two 10-position ammeter switches. One switch feeds current measurements from the positive lines to one ammeter; the other switch feeds current measurements from the negative lines to a second ammeter. In this manner, the currents in the plus and minus lines of each subfield can be compared. If the current values are not the same, the subfield lines are not balanced indicating a fault condition. The ammeter switches also have an off position. On the other side of the current transducer, the lines from the individual subfields are interconnected. The positive lines are connected to one bus bar; the negative lines to another. A 1200-A two-pole switch is used on the output of each field M&S enclosure to permit disconnection of each field from its inverter. It is mounted in its own enclosure external to the field M&S enclosure.

Each component is rated to exceed the maximum current and voltage which will be experienced. The maximum open-circuit voltage which will be experienced is 720 V ($\pm$ 360 V from ground); the maximum short-circuit current will be less than 1000 A. Normal operating voltage and current will be $\leq$ 590 V and 915 A, respectively.

4. Inverters

a. Selection Rationale

A PV system inverter converts the array DC power into utility-compatible 60-Hz AC power and operates the PV power system in parallel with the public utility. The inverter must incorporate

automatic start-up when power is available from the array and automatic shut-down at night and under fault conditions in the DC or AC lines. For this application, the inverter power requirements are dictated by the size of the PV fields which have a rated power of approximately 1 MW. Three available inverters are currently being used in applications greater than 100 kW. These are: 1) the Garrett 1000-kW inverter which is being used in the ARCO Solar 1-MW PV plant in Hesperia, California; 2) the Delta Electronic Control Corporation (DECC) 500-kW inverter which is also being used in the ARCO 1-MW PV plant; and 3) the DECC 300-kW inverter which is being used in several existing applications. The power requirements can be met by using one 1000 kW inverter, two 500-kW inverters, or four 300-kW inverters. For this application, the second option was chosen for the following reasons:

(1) The PV field layout lends itself well to division into two separate fields.

(2) Using two inverters instead of one provides greater flexibility and increased reliability in that half the system can still be generating power when the other half is shut down for maintenance or repair.

(3) DECC inverters have a proven history of performance as witnessed by the 300-kW applications.

(4) Although the 300-kW inverters have proven performance, using four inverters would result in more complex wiring and inverter interface problems and would also be more costly in terms of being oversized for the application.

b. Inverter Specifications

The inverter specifications are summarized in table II-4. The normal input voltage operating range of the inverter is 425 to 600 VDC with a maximum allowable voltage of 750 VDC. The rated array operating voltage with input fluid temperature of 25°C and a fluid temperature differential from inlet to outlet of 50°C will be 543 VDC. The array operating voltage will vary from approximately 475 V to 590 V over the course of the year as previously discussed in secion II-B-2-a. Under

TABLE II-4. INVERTER SPECIFICATIONS

INPUT	SPECIFICATION
Maximum Voltage	750 VDC
Normal Operating Range, Loaded	425-600 VDC
OUTPUT	
Voltage	480 VAC 3 Phase
Power (Max.)	500 kW
kvar	Automatically Minimized (p.f. > .99)
EFFICIENCY	
No Load Losses (tare)	10 kW
Efficiency at 250 kW	93%
Efficiency at 500 kW	93%
Standby Power Drain from Utility	300 W
Output Current Distortion, Full Load	3% THD
Frequency Synchronization Range	60 $\pm$ 2 Hz
PHYSICAL CONFIGURATION	
Dimensions	88"H x 196"W x 48"D
ENVIRONMENTAL	
Temperature	-10°C to 45°C
Humidity	0 - 95%
OUTPUTS TO DATA ACQUISITION SYSTEM	Standard Level Analog and Digital Signals

worst case conditions, the array open-circuit voltage should not exceed 720 VDC. The inverter output is 480-VAC, three-phase, four-wire, 60-Hz AC power. The inverter is rated at 500-kW maximum power; however, the inverter will handle more than 10 percent over-power with the exact shutdown power determined by the actual input voltage. The AC output is automatically synchronized to the utility grid and provides array peak power tracking within 1 percent over the entire power range of 10 to 100 percent of rated power. The inverter will start up and shut down automatically in the presence or absence of sufficient solar power. The inverter will automatically disconnect from the utility grid when the grid exceeds inverter frequency and voltage tolerances. The inverter will also shut down for input over-voltage, inverter over-temperature, excessive reverse power flow, blown fuses, excessive output current (both peak and average), excessive rate-of-rise of current and excessive phase imbalance in the output current. Meters are provided on the control panel to display input power, input voltage, input current, input kWhr, output voltage, output current, output power, output VAR, and total running time.

5. AC Power Distribution System

An AC one-line diagram for the Dixon PV-T system is shown in drawing E-5. The output of the inverter will provide the same type of power as the utility service, 480-VAC, three-phase, four-wire power. The inverters will display output voltage, current, power and VARs. A separate KWhr meter in the AC switchgear in the control building will measure the cumulative energy of the PV Power System (PPS).

The AC outputs of the inverters are interconnected through 800-A, utility service rated, 480-VAC circuit breakers in the PPS AC switchgear enclosure. A third circuit breaker, rated at 1600 A, is provided after the outputs are interconnected. The circuit breakers are provided for safety, fault isolation, and disconnection for maintenance.

At the plant utility service entrance, the utility line contains two kWhr meters back-to-back to measure the power flow to and from the utility. Since standard utility meters cannot run backwards, two meters are necessary to determine the utility sell-back discount.

Inside the plant, both AC sources are fed to 1600-A circuit breakers in the utility interface enclosure. The existing utility circuit breaker must be replaced by a 1600-A breaker because the utility service was not designed for 1 MW. The utility service wiring and transformer might also require replacement. The utility circuit breaker contains an electrical operator so that it can be tripped remotely by the utility lineman.

The AC sources are interconnected and fed to the main plant AC circuit breaker panelboard for distribution through transformers as needed to satisfy all plant power requirements. The combined AC output is metered to determine the energy requirements of the plant and the PPS. A 480-VAC output is fed back to the PPS electrical control building to satisfy the AC power requirements of the PPS. The AC input to the electrical control building is metered to determine the PPS parasitic power requirements.

The AC power supplied to operate the PPS is fed to the main AC panelboard in the electrical control building. The AC panelboard distributes 480-VAC power to the mechanical skid and to the PV-T field transformers. 480 VAC is supplied to the field even though the field trackers require 120 VAC because of the long distances involved and the losses which would result from distributing the lower voltage, higher current power to the field. Eighteen transformers in the field will convert the 480 VAC to 120 VAC for the trackers and field outlets. The transformers (previously defined in table II-2) are located in the field, one near each subfield M&S enclosure. They are specified as 5 kVA. This was obtained by adding the roll (1/60 hp) and tilt (1/4 hp) motors, multiplying by 6 to account for surge and multiplying by four rows with 746 W = 1 hp. Each tilt and roll drive train controls ten arrays, or one row, across the center of piping of each field. The AC panelboard in the electrical control building also routes 480 VAC to a step down transformer which supplies 120 VAC for control building electrical service, for the mechanical skid, and for the controller and hazard station.

An interruptible power supply (IPS) consisting of a diesel generator set provides power for emergency stowing of the arrays in the event of a utility outage. An uninterruptible power supply (UPS) consisting of a battery bank and an inverter provides a source of constant power to the master tracking controller to prevent loss of computer volatile memory.

The control and auxiliary power systems will be discussed in more detail in the following sections.

6. Control Systems

There are four components to the electrical control system required for the Dixon PPS:

(1) Master tracking controller
(2) Array tracking controller
(3) Weather station
(4) Hazard enclosure

The exact configuration of the control system can not be determined at this time due to the developmental nature of E-Systems arrays and the need to develop practical controls for large fields. E-Systems is in the process of performing this redesign and it would not be appropriate to duplicate or contradict their efforts here. However, basic control requirements and generic designs can be presented.

a. E-Systems Tracking Control Requirements

Each E-Systems array string contains one array configured as a master tracking array and several arrays slaved to the master array. Each master array tracker receives signals from a single weather station to automatically initiate tracking in the presence of direct sunlight and to shut down in the absence of direct illumination or in adverse weather conditions. A remote controller is also available to initiate or cancel stowing of an individual string from the control building. The present remote controller concept is only feasible for a small number of strings. For a large field, a multiplexing scheme will be required to interface all strings from one or two controllers. This will probably require a small computer as part of the remote controller. The computer would

sequentially interrogate the strings for tracking status. For emergency stowing of the whole field, the computer would sequence strings in groups because activating all motors simultaneously would require excessive instantaneous currents. Since this interface has not been designed we indicate a generic master tracking controller in the control building but do not provide any details of the design.

b. Array Tracking Controller

As previously noted, the array tracking controller drives one string of arrays. In the Dixon PV-T system, the string is composed of ten arrays of which one array is the master. The array tracking controller is part of the array distribution panel which is located on the drive post to the east side of the master array. (The array layout is shown in drawing M-1.) In addition to housing the tracking controller, the distribution panel feeds the 120-VAC power from the field transformers to the tilt and roll drive motors and also rectifies the AC power to provide regulated DC voltages to the controller. There are 72 distribution panels with array tracking controllers.

The logic diagram for the tracker is shown in figure II-7. It describes the sequence of decisions and actions required to guide tracking for the array. If the weather station indicates high winds or insufficient sun, the array will stow with the tilt to the south and the roll to the east. If the weather station indicates good conditions, the tracker drives the tilt north and south until it acquires and balances the sun in the tilt sensors, then searches east and west until it acquires and balances the sun in the roll sensors.

E-Systems also provides a portable controller unit (Local Control Unit) which plugs into the array distribution panel and allows the user to drive the tilt north or south and the roll east or west for maintenance or troubleshooting.

c. Weather Station

The present E-Systems weather station design consists of a pyranometer and a wind speed indicator. The weather station obtains 12-VDC power from the array distribution panel and returns either a "sun

THE BDM CORPORATION

E-SYSTEMS

Energy Technology Center

SYSTEM TRACKING CONTROL FLOW DIAGRAM

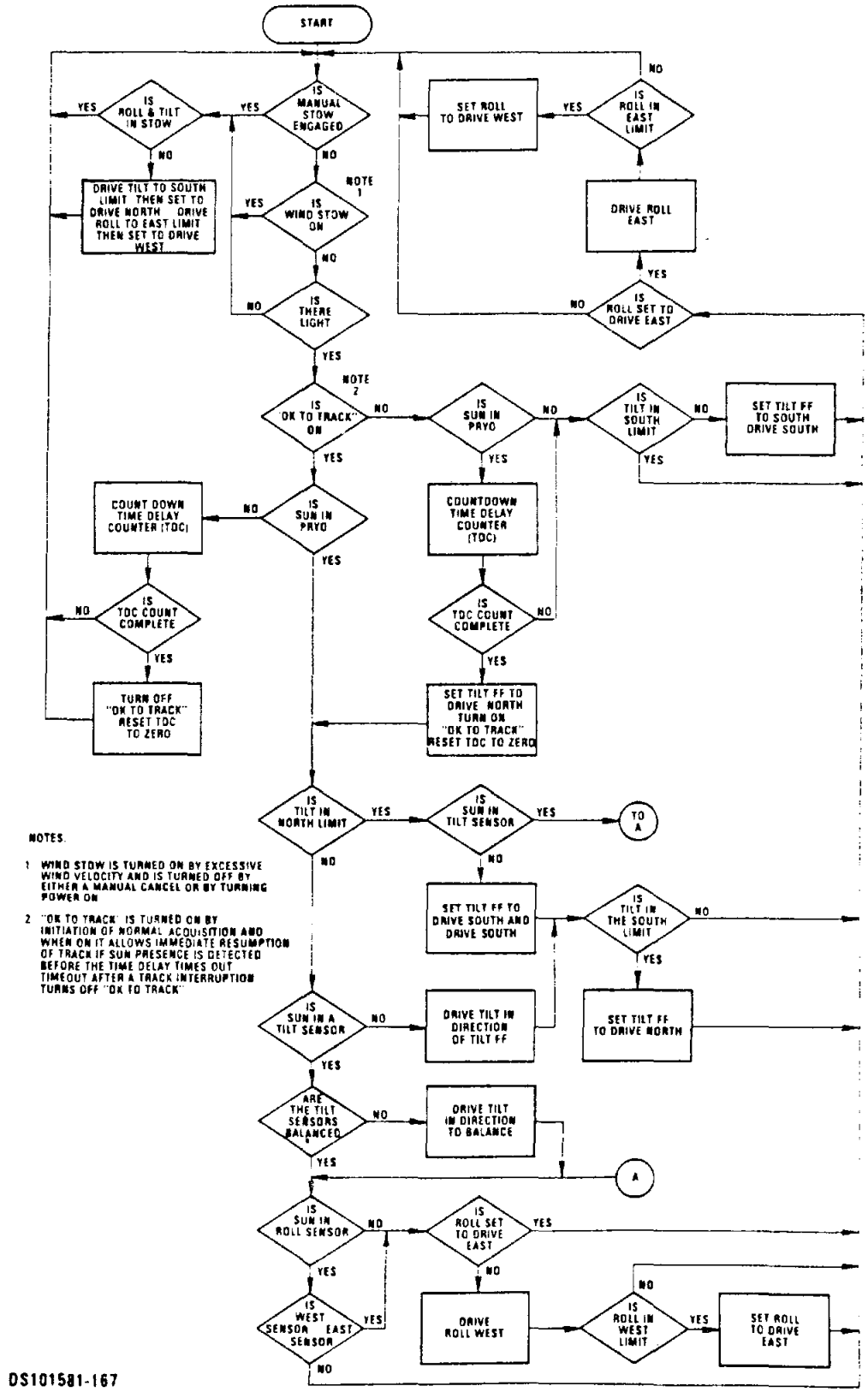

NOTES.

1 WIND STOW IS TURNED ON BY EXCESSIVE WIND VELOCITY AND IS TURNED OFF BY EITHER A MANUAL CANCEL OR BY TURNING POWER ON

2 "OK TO TRACK" IS TURNED ON BY INITIATION OF NORMAL ACQUISITION AND WHEN ON IT ALLOWS IMMEDIATE RESUMPTION OF TRACK IF SUN PRESENCE IS DETECTED BEFORE THE TIME DELAY TIMES OUT TIMEOUT AFTER A TRACK INTERRUPTION TURNS OFF "OK TO TRACK"

DS101581-167

BDM/A-82-458-TR-R1

Figure II-7. System Tracking Control Flow Diagram

out" signal to indicate good conditions or a "dark" signal to indicate insufficient sunlight or high wind speed. In a practical application, the weather station would receive 12-VDC power from only one array distribution panel but would be required to provide light/dark signals to all distribution panels.

For the Dixon PV-T system, it is recommended that the weather station be modified to accept 120-VAC power from the control building, convert it to 12 VDC for internal use, and return light/dark signals to the master tracking controller in the electrical control building. The master controller would then distribute the "sun out" signal to the array distribution panels. The "dark" signal would be incorporated into the emergency stow signal from the controller. The weather station would be located north of the PV-T field sufficiently southwest or southeast of the electrical control building and mechanical skid to prevent shading and wind obstruction.

d. Hazard Enclosure

The Dixon PPS design also includes a hazard enclosure to sense anomalous conditions and initiate emergency stowing through the master tracking controller. Some array fault conditions such as cell over-temperature would result in stowing of individual loops. Fault conditions which would require stowing of the whole field would signal the hazard enclosure for such problems as low level in storage tank, electrical ground fault, utility outage, mechanical equipment failure, etc. Before the PPS could be implemented in the field, a detailed final design would have to address the following issues:

(1) Which conditions would be managed locally at the array distribution panel by E-Systems-furnished equipment and which managed centrally by the hazard enclosure and master controller?

(2) Which fault or anomalous conditions would necessitate stowing?

(3) Should the hazard enclosure be a separate unit or be incorporated as part of the master tracking controller?

7. Auxiliary Power Systems

The purpose of the auxiliary or backup power systems is to protect the arrays from damage in the event that emergency stowing is required during a utility outage. Two types of systems are required, an

IPS which supplies power for the tracking motors when conventional power is not available, and a UPS which prevents the loss of volatile memory in the computer of the master tracking controller and provides continuous power for the hazard enclosure.

a. Interruptible Power Supply (IPS)

The IPS consists of a 100-kW diesel driven generator set. It is radiator cooled and includes a 100-gallon (0.38 m^3) fuel tank and 225 A-H engine starting batteries. The parts description was previously included in table II-2. Start-up is initiated by a loss-of-power relay in the hazard enclosure which is activated from the output of the PPS AC system. The power from the IPS is routed to the field transformer line in the control building AC service panelboard and interconnected through a circuit breaker. When the IPS is activated, commands will be sent to the field to stow all the arrays. The signal will be locked out, however, if the field has already been stowed (e.g., at night or due to poor weather). The IPS provides the power for stowing but does not initiate stowing. This is accomplished through the master tracking controller.

b. Uninterruptible Power Supply (UPS)

The UPS consists of a battery bank driving a 3-kVA inverter which provides the power for the master tracking controller and the hazard enclosure, both for normal operation and for emergency stowing. A small inverter is sufficient because only these two systems would be operated from this inverter. A battery charger powered from the AC service panelboard is used to keep the batteries charged. In the event of a utility power outage, the batteries would always have sufficient charge to keep the controller operating until all the arrays have been stowed. The array strings would be interfaced sequentially in groups since the diesel generator set which supplies emergency power would not be capable of providing motor start-up power for all strings simultaneously.

The sizing requirements for the UPS will be dependent on the master tracking controller and hazard enclosure design and may be adjusted based on the PV-T system final design prior to construction.

8. Electrical Control Building Design

a. Building Construction

The electrical power conditioning and control equipment is housed in the Electrical Control Building (ECB) shown in drawing E-6. The design of the ECB is based on an existing 1-MW PV system control building but is tailored for use in a more routine operational environment than the other experimental installation.

The ECB is located to the north center of the PV-T field and is composed of two structures, each of metal fabrication. The main building is 32 ft wide by 38 ft long (9.8 x 11.6 m) with 12-ft (3.7 m) eave height as shown in drawing E-6. The walls and roof system consist of preformed metal panels of vertical profile, with R-19 insulation and liner panels. Primary framing is clear span rigid frame. The building has 1 on 12 roof slope. The smaller building is used to house the diesel generator set, 100-gallon (0.379 m^3) fuel tank, and engine start batteries which are located as shown in the drawing. This building is 14 ft long by 10 ft wide (4.3 x 3 m) with 7-ft (2.13 m) eave height and a 1 on 12 roof slope. It has a 6 ft wide by 7 ft high (1.8 x 2.1 m) double door. The diesel generator is set on 6 in by 6 in by 1 in (15.2 cm x 15.2 cm x 2.54 cm) vibration pads.

The main building has two 3 ft wide by 7 ft high (0.91 x 2.1 m) metal doors for personnel access and a 12 ft wide by 10 ft 1 in high (3.7 x 3.1 m) roll-up door for equipment and hardware access. The roll-up door is located at the south end of the east wall. The personnel doors are located at the north end of the east wall and the west end of the south wall. The latter door opens into a 8 ft by 32 ft (2.4 x 9.8 m) control room separated from the power conditioning and switchgear room by interior-quality dry-wall and a 3 ft by 7 ft (0.91 x 2.1 m) metal door at the south end. The control room is insulated and provides an air-conditioned office environment for personnel isolated from the noise of the inverters and exhaust fans and from the variable temperature of the equipment room.

Windows in the large equipment room are located in the center of the east and south walls. Windows in the smaller control room

are located one in the north wall and three in the west wall. The higher density of windows in the control room is not primarily for lighting but to create a more pleasant working environment since ample electrical lighting will be available in both rooms. The windows are 6 ft long by 3 ft high (1.8 x 0.91 m) and slide open horizontally. All windows contain screens.

The ECB is laid on a concrete slab, 12 in (0.3 m) thick, as noted in the drawing. The concrete slab has wire fabric reinforcement under the top surface with #5 rebars 3 in (7.62 cm) above the bottom surface. The rebars are on 12 in (0.3 m) centers. The slab top surface is steel trowel finished 6 in (0.15 m) above the surrounding grade.

Two concrete pads are required for the inverters. They are 5 ft wide by 17 ft 4 in long by 3 ft 4 in thick (1.52 x 5.28 x 1.02 m) with the top surface 4 in (10.16 cm) above the building slab. The slabs are steel trowel finished with two C channel beams mounted in each pad flush with the surface as noted in the drawing.

Two concrete stoops are required for the outside personnel doors and a sloped concrete apron for the service door. The stoops are 4 ft by 4 ft by 12 in thick (1.22 x 1.22 x 0.3 m). The apron is 12 ft by 12 ft by 12 in thick (3.66 x 3.66 x 0.3 m). All three are wire fabric reinforced under the top surface with #5 rebars 3 in (7.62 cm) above the bottom surface on 12-in (0.3 m) centers. The stoops have a 1 percent slope while the apron slopes 6 in (0.152 m) over 12 ft (3.66 m) to the surrounding grade. All three have a broom finish.

Cable runs to and from the building are routed in 5-in (12.7 cm) conduit through the concrete slab floor and under the slab to the exterior of the building. Conduit terminates outside the building with external cable runs to the field and the plant consisting of direct burial cables.

b. Equipment Arrangement

Referring to drawing E-6, the power conditioning and switchgear are located in the main equipment room which has inside

dimensions of 30 ft 4 in by 28 ft 1 in (9.25 x 8.5 m). The two DC field M&S enclosures are arranged along the south wall on either side of the window. These enclosures are approximately 6 ft by 6 ft by 2 ft deep (1.83 x 1.83 x 0.61 m) each. The DC conduit runs are made overhead to the two inverters located near the center of the room. Field A goes to inverter A and field B to inverter B.

The 500 kVA inverters are each 4 ft wide by 16 ft 4 in long by 7 ft 4 in high (1.22 x 5 x 2.24 m) and are located on the concrete pads 6 ft (1.83 m) apart, with distances to the walls as listed in the drawings. A minimum 4 ft (1.22 m) clearance is required around the inverters because they have 4 ft (1.22 m) wide doors for servicing. The AC conduit runs are made overhead to the PV power system AC switchgear panel.

The PPS AC switchgear panel is located along the north wall 7 ft (2.13 m) from the east wall. It is approximately 6 ft long by 6 ft high by 4 ft deep (1.83 x 1.83 x 1.22 m) and consists of three circuit breaker panels and an AC kWhr meter.

The control equipment and UPS are located in the control room in the west end of the ECB. The AC service for the control room and the field is brought into an AC service panelboard which also contains a meter and step-down transformer for the 120/240 service to the building. This panelboard is located in the northeast corner of the control room. Just south of the panelboard are the UPS system and its battery bank which occupies about 8 ft (2.4 m) of wall space. Next is located the master tracking controller and hazard enclosure station. Finally, a desk and chair are located near the door.

c. Heating, Ventilation and Air-Conditioning (HVAC)

The inverters require a high degree of air flow for cooling which is accomplished by two roof exhaust fans. One fan is located over each inverter. The fans are propeller-type, upblast fans as shown in the drawing, each with a 14,000-CFM (6.6 m^3/sec), 3-hp (2.2 kW) motor operating from 480-VAC, three-phase, 60-Hz power. Air flow into the building for inverter cooling is accomplished by installing

a 7 ft high by 8 ft long (2.13 x 2.43 m) motorized damper and filter bank in the north wall.

The control room is air-conditioned for personnel comfort with a heat pump installed in the west wall as shown in the drawing. The cooling capacity of the heat pump is 22,500 Btu/hr (6.6 kW); the heating capacity is 13,900 Btu/hr (4 kW).

The windows in the ECB are of the horizontal slider type with screens for fresh air access without insect penetration.

9. Protection and Grounding

Numerous safety and protection features have been incorporated in the Dixon PV-T system design. DC switches and fuses, and AC circuit breakers and disconnects have been provided for electrical isolation, for protection against transients, and for personnel safety during maintenance. Blocking diodes are used at the ends of array strings to prevent reverse current flow into the PV cells and surge arresters are used on both DC and AC lines for protection against lightning. The inverters also have internal protection against anomalous conditions such as array over-voltage, utility out-of-range (voltage and frequency), utility over-current and ground fault, as discussed in the inverter section.

The PV-T field is also monitored for potentially hazardous conditions such as loss of fluid flow, cell over-temperature, and loss of tracking control. These conditions are fed to each array tracker for emergency stowing of the individual string. Other hazardous conditions such as inclement weather and ground fault are fed to the master tracking controller or the hazard enclosure in the electrical control room for emergency stowing of the whole field. All mechanical equipment in the field are monitored for proper operation.

In addition to the above features which have been previously discussed in other sections, a counterpoise grounding system is employed for safety in the event of equipment shorting and for lightning protection. The counterpoise system shown in drawing E-7 consists of a network of #4/0 AWG, stranded, bare copper wire buried 2 ft (0.61 m) deep in the field and around the mechanical skid and the electrical equipment

building. Trenches are dug throughout the field for both the counterpoise system and for the routing of DC and AC cables in the field.

All vertical posts of the PV-T arrays are grounded to the counterpoise as are the subfield M&S enclosures. The center taps of each PV-T string are also grounded to the counterpoise through the M&S enclosure cases. The counterpoise conductors are routed north and south between rows of arrays and east and west between every other row. This ensures that no adjacent grounding conductors are more than 100 ft (30.5 m) apart and provides conductors adjacent to each row for array grounding. Conductors are interconnected at intersections with standard cable-to- cable bolted connectors. Ten-ft (3 m) grounding rods are sunk at intersections not more than 80 to 100 ft (24.4 to 30.5 m) apart.

At the mechanical skid, all mechanical equipment and electrical distribution boxes are grounded to the counterpoise. The metal electrical control building is also grounded to the counterpoise on all four sides. All electrical equipment cases are also grounded to the counterpoise via the metal building frame.

Lightning rods are positioned around the roof of the electrical building, around the mechanical skid, and on the weather station. If a fence is required around the system, it will also be grounded to the counterpoise every 80 to 100 ft (24.4 to 30.5 m) of length. Using lightning rods in the PV-T field does not appear to be warranted since the arrays already act as lightning conductors and lightning rods could not divert lightning strokes a significant distance away from the arrays. Lightning rods also provide sources of obstruction and shadowing.

C. MECHANICAL SYSTEM DESIGN

1. Constraints for Mechanical Design

The PV-T system designed for Dixon, California is shown on the P+ID drawing M-3, and the P+ID specifications are given in table II-5. The design methodology for the system resulted from the following fixed constraints:

TABLE II-5. DIXON PLANT P+ID SPECIFICATIONS

WATER (LOAD) SIDE

SYMBOL	DESCRIPTION	SIZE	CONNECTION	PART MANUFACTURER & NO.
BV-9, 10 11, 12, 13	Ball Valve	3"	150#	Worcester - 51-44-150
CDT-1	Condensate Tank	--	---	Existing
CK-1, 2,	Check Valve	3"	150#	Crane, #147
FB-1	Fossil Fuel Boiler	--	---	Existing
FRG-1	Flow Regulator	3"	150#	Taylor Tools, #TF-D-1 0-250 gpm, Set at 215 gpm
FWP-1	Feedwater Pump	--	---	Existing
HX-2	Heat Exchanger	--	---	Existing
LL-1	Low Level Switch	3/4"	NPT	Magnetrol, Capacitance Type, #81-4212-002, with Flexible Probe 41-1201
LV-1	Level Valve	2"	NPT	Fisher, #171F
MV-3	Motorized Valve	3"	150#	Worcester - 51-44-150 with 3075X Actuator
PRG-1	Pressure Regulator	--	---	Existing
PRG-2	Pressure Regulator	--	---	Jordan, Mark 67 with External Pilot, Press. Range 70-150 psig, Set 100 psig
SP-1	Supply Pump	3"	150#	Peerless, 7 lb, 11 Stage, Curve #2847296, 265 ft of Head at 200 gpm

TABLE II-5. DIXON PLANT P+ID SPECIFICATIONS (Continued)

WATER (LOAD) SIDE

SYMBOL	DESCRIPTION	SIZE	CONNECTION	PART MANUFACTURER & NO.
ST-3,4	Strainer	3"	150#	Armstrong, #BIFL-3-150
TCV-1 AND TB-1	Temperature Control Valve	3"	150#	Jordan, Mark 87, Direct Acting, Temp. Range 102-185°F, Set 140°F
WP-1	Wash Pump	--	---	Existing
WWP-1	Water Well Pump	--	---	Existing

TABLE II-5. DIXON PLANT P+ID SPECIFICATIONS (Continued)

GLYCOL (FIELD) SIDE

SYMBOL	DESCRIPTION	SIZE	CONNECTION	PART MANUFACTURER & NO.
AE-1	Air Eliminator	3"	NPT	Amtrol, #448
BV-1,2	Ball Valve	6"	150#	Worcester - 51-44-150
BV-3, 5	Ball Valve	3"	150#	Worcester - 51-44-150
BV-4, 6, 7, 8	Ball Valve	4"	150#	Worcester - 51-44-150
BV-1A through 72A,1B through 72B	Ball Valve	1"	NPT	Worcester - 51-44-150
CP-1	Circulation Pump	3"x4"	125#	Peerless - 3AD10, 3500 rpm, Curve No. 311045, 8-3/8" Impeller, 1090 lb, 250 ft of Head at 530 gpm
CT-1, 2	Cooling Tower	4"	150#	Baltimore Aircoil, #VXI 70-2, 10,180# ea.
ET-1	Expansion Tank	3"	150#	Ace Buehler, X 36-5 325 gal, 36" dia. x 82" Long, Unlined,
FS-1A through 36A,1B through 36B	Flow Switch	1"	NPT	Peeco, Type NT, Flow Set at 4 gpm
GV-1	Globe Valve	2"	150#	Crane, #143
GV-2	Globe Valve	4"	150#	Crane, #143
HX-1	Heat Exchanger	4"	150#	Tranter, #UX-216-HP-160, 304SS Plates, NBR Gaskets, 2591 lb
LS-1	Level Switch	4"	150#	Omnitrol, #616-FS-WR, Stainless Steel Float
MV-1	Motorized Valve	4"	150#	Worcester - 51-44-150 with 3075X Actuator

TABLE II-5. DIXON PLANT P+ID SPECIFICATIONS (Concluded)

GLYCOL (FIELD) SIDE

SYMBOL	DESCRIPTION	SIZE	CONNECTION	PART MANUFACTURER & NO.
MV-2	Motorized Valve	6"	150#	Worcester - 51-44-150 with 3075X Actuator
PRV-1	Pressure Relief Valve	2"	NPT	Dresser Industries, Consolidated #1488, Press. Set at 5 psig
PRV-1A through 36A,1B through 36B	Pressure Relief Valve	1/2"	NPT	Dresser Industries, Consolidated #1488, Press. Set at 100 psig
ST-1, 2	Strainer	4"	150#	Armstrong, #B1FL-4-150
TSIA through 36A,1B through 36B, TS-2	Temperature Switch	1/2"	NPT	Transamerica Delaval, Barksdale ML1H-H352-W, Temperature Set at 225°F
TS-1	Temperature Switch	1/2"	NPT	Transamerica Delaval, Barksdale ML1H-H352-W, Temp. Set at 210°F
VB-1	Vacuum Breaker	3/4"	NPT	Gast, #AA308, set Press. 2 psid
V-1A THRU 36A, 1B THRU 36B	Venturi	1"	NPT	Gerand, #VS-1"-406

(1) E-Systems collector
(2) Row to row spacing - two apertures
(3) Total arrays - 720
(4) Arrays per delta-T loop - 10
(5) Total flow rate collector side - 360 gpm (0.023 m^3/sec)
(6) Maximum collector side operational temperature - 210°F (98.9°C)
(7) Load side flow rate - 200 gpm (0.0126 m^3/sec) average
(8) Load side required temperature - 140°F (60°C)
(9) Load side makeup temperature - 65°F (18.3°C)
(10) Thermal storage:
  (a) Required - 11.6 MW/hr
  (b) Criteria - size the volume and flow rate into the flow through storage tank such that at the end of the best solar insolation day the storage tank will be filled and effectively have 11.6 MW/hr of energy. The sizing must consider the normal simultaneous operational draw down from the tank and the storage tank maximum temperature design constraint.

2. Field Layout

The solar collector field layout shown in drawing M-1 was chosen to reduce the length of the manifold and to conform to a typical plot of land. The field is divided into two subfields, each being fed from a manifold in the center of each field. This allowed the field to be somewhat square and to have reasonable manifold sizes (3-in or 7.62 cm diameter). Ideally the plant and the equipment skid will be positioned to the north of the field to prevent shading of the collectors.

3. Manifold

The manifold supply and return lines are stacked vertically, as opposed to side-by-side, to reduce the required land area and facilitate connections from both sides to the collectors. Each collector is connected to the manifold with a U-bend in the pipe run. This U-bend serves two purposes: 1) provides a "thermal trap" that prevents hot fluid in the manifold from thermal syphoning to the colder fluid in the collectors when not in operation, and 2) provides a flexibility to compensate for

the axial thermal expansion of the manifold. The design flow rate through each manifold of each subfield is 180 gpm (0.0114 m^3/sec), and the diameter of 3 in (7.62 cm) for the pipes was sized using the criteria and technique in volume III, chapter IV. The main feeder line which supplies both subfields was sized to be 4 in (10.16 cm) in diameter for the total flow rate of 360 gpm (0.023 m^3/sec). This gives a flow velocity of 9 ft/sec (2.74 m/sec). Within the "rule of thumb" economic velocity range of 3 to 10 ft/sec (0.91 to 3.05 m/sec) for sizing steel pipe.

4. Thermal Loop (Delta-T Loop)

There are obvious advantages to having long delta-T loops, (e.g., less manifold piping, less control and maintenance hardware). However, these must be traded off against disadvantages (e.g., pressure drop through a delta-T loop). The design must also consider the current, voltage, and wire sizes for the PV cells which are discussed in the previous section.

SOLCEL runs indicate that the optimum total flow rate is 360 gpm (0.023 m^3/sec) in the collector loop. A data point obtained from E-Systems for 150°F (65.6°C) 30-percent ethylyne glycol at 5.85 gpm (3.7×10^{-4} m^3/sec) through nine arrays resulted in a pressure drop of 50.3 psid (0.35 MPa). If the pressure drop through the collectors is assumed to follow the relation:

$$\text{psid} = \frac{G^{1.8}\ \mu^{0.2}\ \rho^{0.8}\ L}{4.7 \times 10^4\ D^{4.8}}$$

Then $L/D^{4.8}$ can be found such that:

$$\text{psid} = 8.58 \times 10^{-3}\ G^{1.8}\ \mu^{0.2}\ \rho^{0.8}\ N_c$$

$$\text{Pa} = 2.35\ G^{1.8}\ \mu^{0.2}\ \rho^{0.8}\ N_c \qquad \text{(SI units)}$$

where:

G = flow rate, gpm (m^3/sec)

μ = fluid viscosity, Cp (Pa)

ρ = fluid density, lb/ft^3 (kg/m^3)

N_C = number of collector arrays per row

This equation can be used for an initial determination of the pressure drop through a delta-T loop. Since the collectors are rated for 0.69 MPa (100 psig), the delta P through the collectors must not exceed this pressure. However, the P+ID shows that the heat exchanger (HX-1) and the cooling towers (CT-1, 2) are both downstream of the collectors and upstream of the circulation pump (CP-1). Therefore, the delta P through the HX-1 and CT-1, 2 must be considered when determining the maximum delta P through the collectors. Typical values are 25 psid (0.17 MPa) and 15 psid (0.1 MPa), respectively. If the suction to CP-1 is considered 0 psig (0 Pa), then the collector outlet would have to be 40 psig (0.276 MPa) to account for the delta P through HX-1 and CT-1 and 2. Since the maximum collector inlet pressure is 100 psig (0.79 MPa) (collector maximum rating) then the maximum delta P across the collectors would be 60 psid (0.41 MPa). These criteria restrict the number of arrays per delta-T loop to be less than 11 (see figure II-8).

5. Expansion Tank (ET-1)

The collector loop requires an expansion tank to accomodate the volumetric thermal expansion of the ethelyne glycol when it is heated to operation temperature (200°F or 93.3°C) otherwise the system would build up high pressure causing leaks, failures, and possibly injuries. In order to size the ET-1, a rough idea of the volume of the system is required. Consider the sketch in figure II-9 and table II-6.

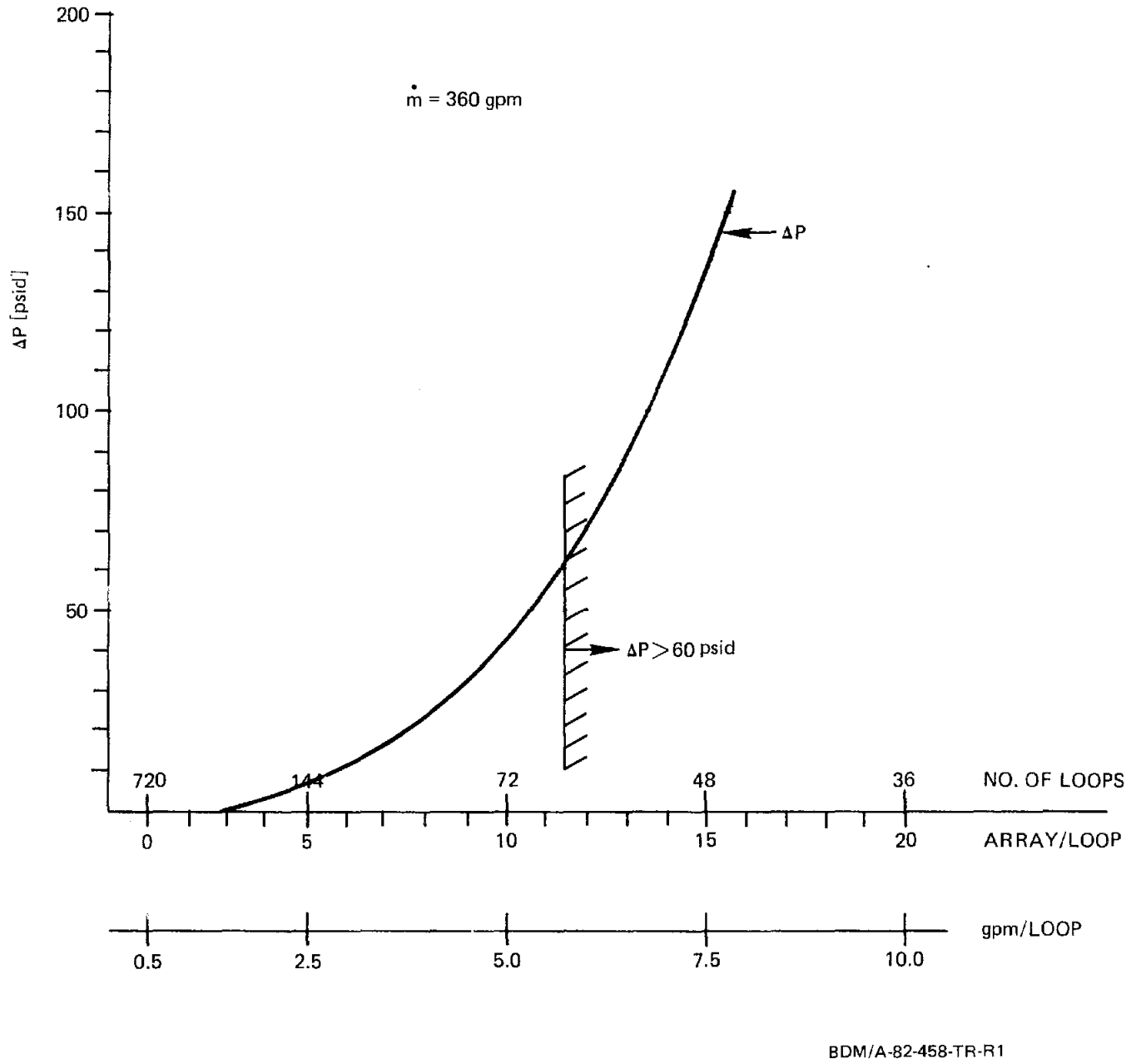

Figure II-8. Pressure Drop Across One Delta-T Loop with a Total Flow Rate of 360 gpm

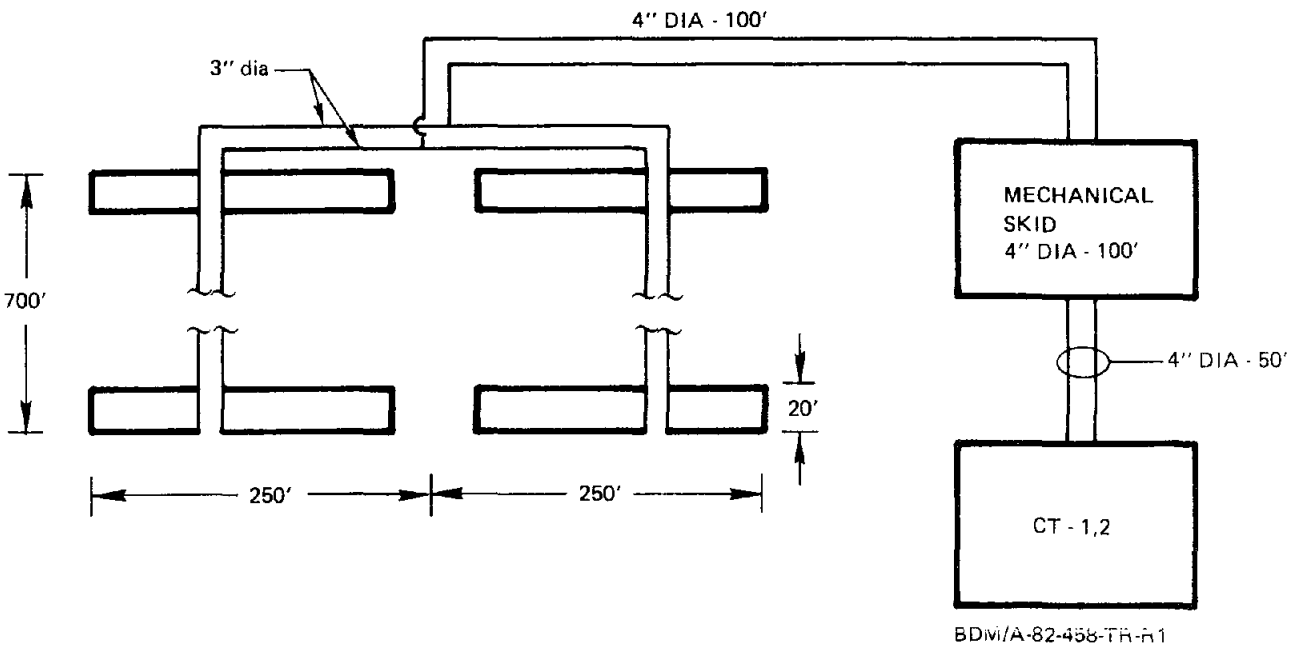

Figure II-9. Piping Schematic

TABLE II-6. FLUID VOLUME INVENTORY

PIPE	ft/RUN	DIAM-in	gal/ft	# OF RUNS	gals
Collectors	73	3/4	.023	720	1206
End Loop Connectors	20	3/4	.023	70	32
Manifold	700+125	3	0.384	4	1267
Collector/Skid	100	4	0.661	2	132
Skid+HX	100	4	0.661	1	66
Skid/CT-1, 2	50	4	0.661	2	66
TOTAL					2769

As shown in figure II-10 for a 40-percent ethylene glycol solution, the volumetric thermal expansion is:

$$\frac{\rho_{T\ =\ 68°F}}{\rho_{T\ =\ 212°F}} = \frac{1.051}{1.00} = 1.051$$

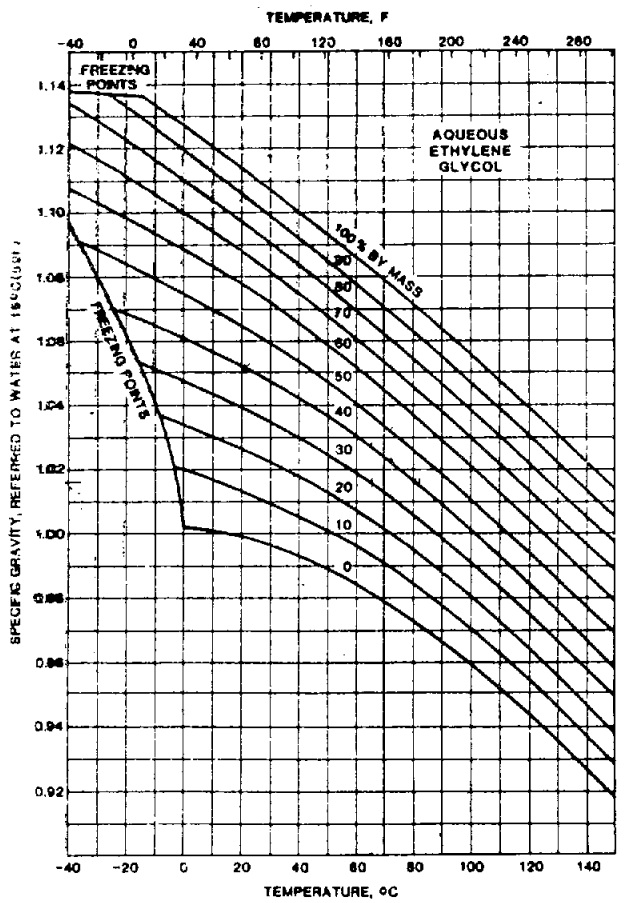

BDM/A-82-458-TR-R1

Figure II-10. Specific Gravity of Aqueous Solutions of Ethylene Glycol

Then:

$$2769 \text{ gal}(1.051) = \begin{array}{r} 2910 \\ \underline{2769} \\ 141 \end{array} \text{ gal } (0.53 \text{ m}^3)$$

Then the system will increase in volume by 141 gallons (0.53 m^3) when it is operating. The ET-1 will be sized such that when the system is cold, it will be one-fourth full, and when it is hot, the ET-1 will be three-fourths full. Therefore, ET-1 should be approximately 282 gallons (1.07 m^3). The next larger incremental size for a prefabricated tank is a 325-gallon (1.23 m^3) Ace Buehler Model No. X36-5 which is 36 in (0.91 m) in diameter and 82 in (2.08 m) long. The tank will not be pressurized by an external source (e.g., a nitrogen cylinder). However, it must stand the increase in pressure that it will undergo when it is valved shut to the atmosphere and the pressure increases due to the thermal volumetric expansion. This can be calculated using:

$$P_2 = \frac{P_1 V_1}{T_1} \frac{T_2}{V_2}$$

with the resulting pressures shown in table II-7.

TABLE II-7. EXPANSION TANK PRESSURES

SYSTEM CONDITION	V gal	T °R	P psia	P psig
Cold	244	528	14.7	0
Hot	103	577	38	23.4

This pressure of 23.4 psig (0.26 MPa) in the ET-1 may prove to be excessive since the allowable delta P across the collectors of 60 psid (0.41 MPa) must be reduced by this amount resulting in 36.6 psid (0.25 MPa) allowable across the collectors. To remedy this, a pressure

relief valve can be placed on ET-1 and set for 5 psig (0.136 MPa). This will make the allowable delta P equal to 55 psid (0.38 MPa). A vacuum breaker with a set point of 2 psig (0.115 MPa) will be required to prevent the ET-1 from having a vacuum when the system cools down and thus possibly crushing the tank. The tank should be elevated above the pump as high as is practical in order to reduce cavitation at the pump and to allow feeding through the pump during the system filling procedure.

6. Cooling Tower (CT-1, 2)

After having a general idea of the configuration of the system, SOLCEL runs were made and the maximum heat rate from the collectors was refined to be 14.2 MBtu/hr (4.16 MW). If the system is to be operated on weekends when there is no thermal load from the plant but the generation of electricity for sell-back is desirable, then the cooling towers (CT-1, 2) must be sized to reject 14.2 MBtu/hr (4.16 MW) while maintaining the collectors below the safe maximum temperature of 210°F (98.8°C). The delta-T across the cooling tower is the range and is found by:

$$\Delta T = \frac{Q}{\dot{m}C_p} = \frac{14.2 \text{ MBtu/hr}}{360 \text{ gpm } 500 \frac{\#/\text{hr}}{\text{gpm}} \; 0.85 \frac{\text{Btu}}{\#\text{F}}} = 93^{\circ}\text{F } (51.7^{\circ}\text{C})$$

Then, 210 - 93 = 117°F (98.9 - 57.7 = 47.2°C) is the maximum collector inlet temp (see figure II-11). This is also the maximum temperature of the fluid and air in the expansion tank.

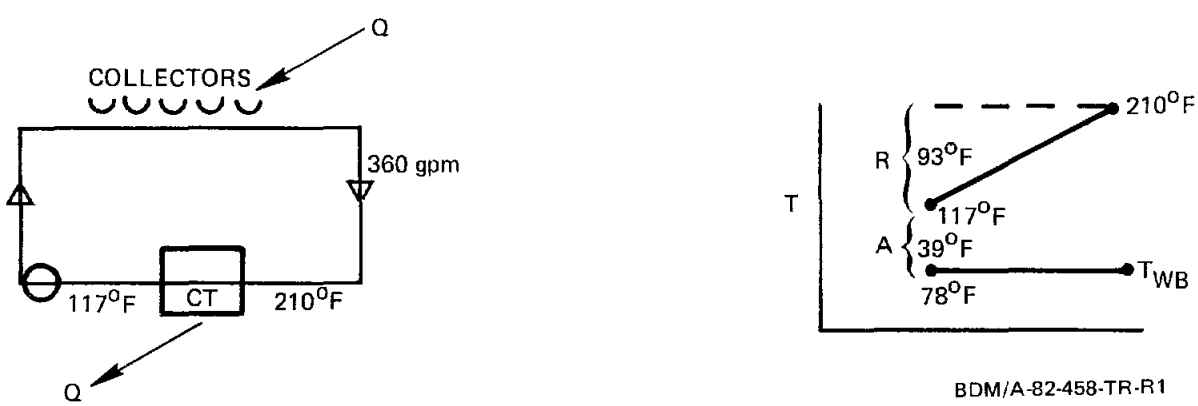

Figure II-11. Cooling Tower Conditions and and Temperature Diagram

The approach is defined as the leaving fluid temperature minus the design wet bulb temperature, 117 - 78 = 39°F (47.2 - 25.5 = 21.7°C). The choice of a CT is to use an industrial fluid cooler in which the fluid that is to be cooled (ethylene glycol) is passed through a tube bank over which water and air are circulated to reject the heat. The air is forced across the coil with a fan and the water is circulated with a pump, allowing a small amount to evaporate in the heat rejection process. Because of the nature of this type of CT, the maximum inlet temperature for the ethylene glycol should not exceed 180°F (82.2°C), otherwise flash evaporation will take place in the recirculated cooling water and the heat transfer coefficient will be reduced due to the formation of scale on the outside of the coil. A method of reducing the temperature of the ethylene glycol entering the CT to 180°F (82.2°C) and at the same time allowing the collector outlet to obtain the maximum temperature of 210°F (98.9°C) is to increase the flow rate through the CT as shown in figure II-12.

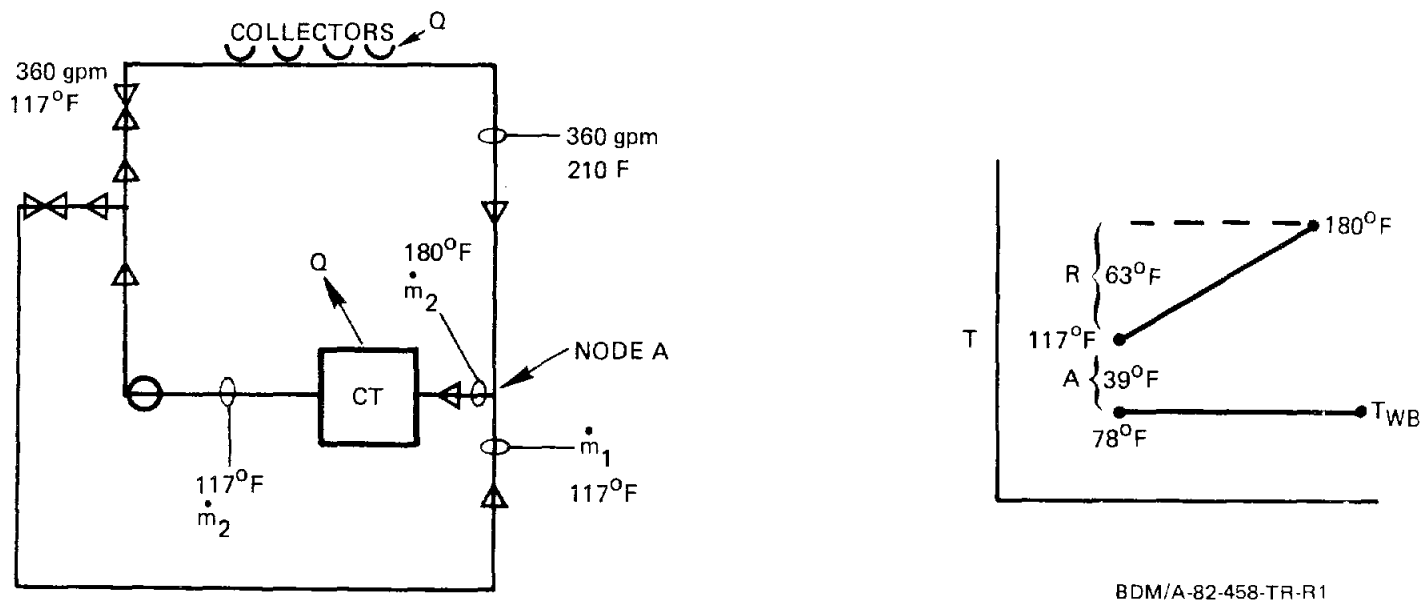

Figure II-12. Cooling Tower Conditions and Temperature Diagram with Flow Bypass

To find $\dot{m}_2$, an energy balance is performed at node A:

$$\dot{m}_1(117) + 360(210) = \dot{m}_2(180)$$

Also:

$$\dot{m}_1 = \dot{m}_2 - 360$$

Then:

$$\dot{m}_2 = 530 \text{ gpm } (0.033 \text{ m}^3/\text{sec})$$
$$\dot{m}_1 = 170 \text{ gpm } (0.011 \text{ m}^3/\text{sec})$$

With the following information, the manufacturer of CT units can choose the size and model required to reject the 14.2 MBtu/hr (4.16 MW).

(1) Range = 63°F (35°C)
(2) Approach = 39°F (21.6°C)
(3) Design wet bulb temperature = 78°F (25.6°C)
(4) Design flow rate = 530 gpm (0.033 m^3/sec)
(5) HTF = ethylene glycol

In this case, two Baltimore Air Coil industrial fluid coolers (see figure II-13) model #VXI 70-2 are used in series to meet the cooling load.

7. Heat Exchanger (HX-1)

The HX is required to separate the potable water on the load side from the non-potable ethylene glycol on the collector side. Code requires that a double wall HX be used, however, a plate and frame HX serves the same purpose (see figure II-14). If a leak in the gaskets should occur, with a plate HX, neither fluid would mix with each other but would drain to the environment. This prevents cross-contamination of the fluids. Plate HX also have a more effective method of heat transfer

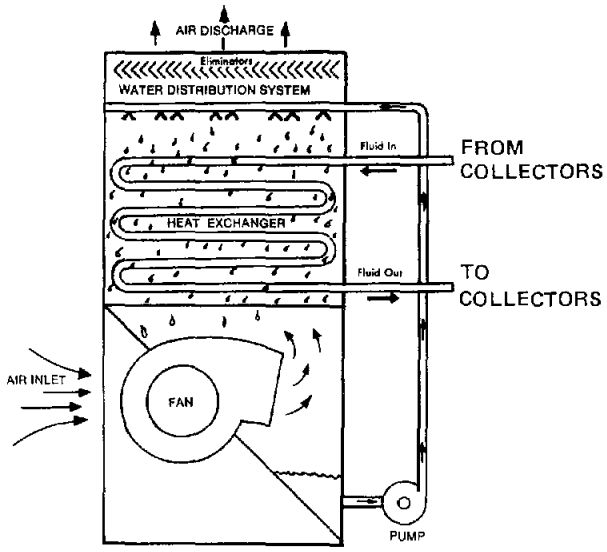

Figure II-13. Industrial Fluid Cooler

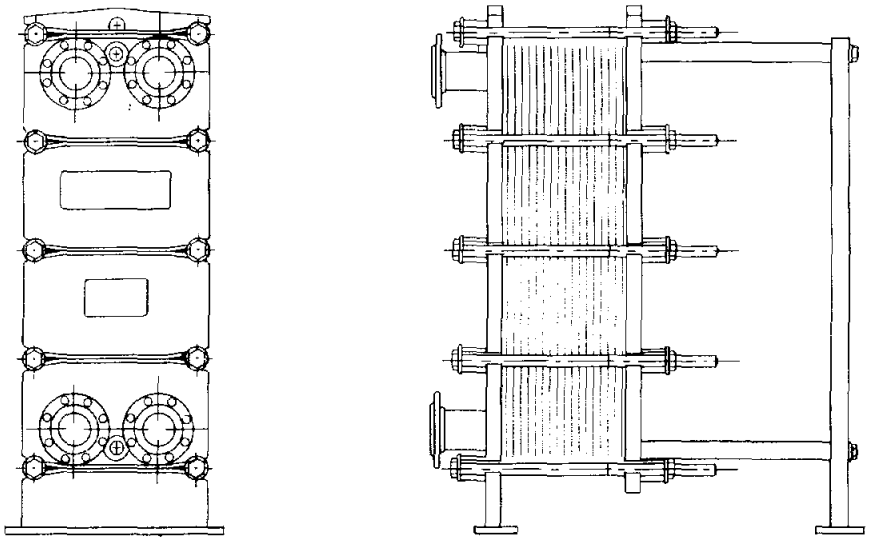

BDM/A-82-458-TR-R1

Figure II-14. Plate and Frame Heat Exchangers

due to the high turbulence allowing approach temperatures to be less than 5°F (2.8°C). The HX is sized to transfer the peak heat rate (14.2 MBtu/hr or 4.16 MW) from the collectors to the load while maintaining the collector outlet temperature at the maximum of 210°F (98.9°C) (see figure II-15). The flow rate into storage was varied and the appropriate HX area was chosen as follows:

$$\Delta T_{max} = \frac{Q_{max}}{\dot{m}C_p} = \frac{14.2\ \text{MBtu/hr}}{200\ \text{gpm}\ \frac{500\ \#/\text{hr}}{\text{gpm}}\ \frac{1.0\ \text{Btu}}{\#\,°\text{F}}} = 142°\text{F}\ (78.9°\text{C})$$

$$TOL_{max} = TIL + \Delta T_{max} = 65 + 142 = 207°\text{F}\ (97.2°\text{C})$$

$$A = \frac{Q}{U\Delta T_{LMTD}} = \frac{Q}{U\ \frac{\Delta T_{max} - \Delta T_{min}}{\ln \frac{\Delta T_{max}}{\Delta T_{min}}}} = \frac{14.2\ \text{MBtu/hr}}{\frac{800\ \text{Btu}}{\text{hr}°\text{F}\,\text{ft}^2}\ \frac{52-3}{\ln\frac{52}{3}}\ °\text{F}} = 1033\ \text{ft}^2\ (96\ \text{m}^2)$$

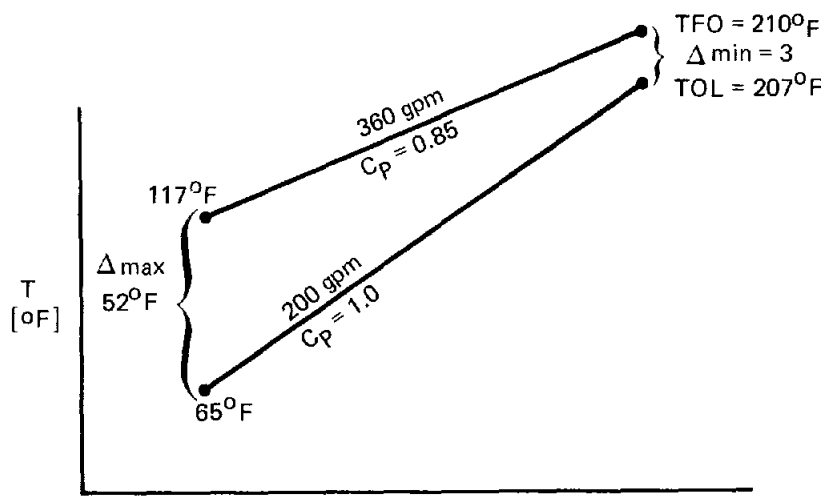

BDM/A-82-458-TR-R1

Figure II-15. Inlet and Outlet Temperature for HX-1

For different flow rates to storage, results are shown with vendor's prices in table II-8.

TABLE II-8. HEAT EXCHANGER SIZING AND COSTING

$\dot{m}$	TOL-MAX	HX Area	HX Cost
gpm	°F	ft^2	$
200	207	1033	13,800
205	204	811	
215	197	632	9,000
225	191	544	
250	179	435	7,100

These data will be used in figure II-17 to minimize the combined cost of the storage tank and the heat exchanger.

8. Storage Tank (ST-1)

SOLCEL runs indicate that a thermal storage tank that provides 41.0 MBtu (12 MW hr) of storage is optimum. To size the tank, the flow rate into the tank and resulting tank size is considered using the average heat rate for the best solar day as follows:

$$Q_{avg} = 11.1 \text{ MBtu/hr}$$

For the load:

$$\Delta T_{avg} = \frac{Q_{avg}}{\dot{m}C_p} = \frac{11.1 \text{ MBtu/hr}}{200 \text{ gpm } \frac{500 \text{ \#/hr}}{\text{gpm}} \; \frac{1.0 \text{ Btu}}{\text{\#}^\circ\text{F}}} = 111^\circ\text{F } (61.7^\circ\text{C})$$

$$TOL_{avg} = TIL + \Delta T_{avg} = 65 + 111 = 176^\circ\text{F } (80^\circ\text{C})$$

If the storage flow rate is 200 gpm (0.013 m^3/sec), then the average storage temperature would be 176°F (80°C) at 200 gpm (0.013 m^3/sec), then the storage water would be mixed with 65°F (18.3°C) makeup water when the

storage is discharged to result in 140°F (60°C) water as indicated in figure II-16.

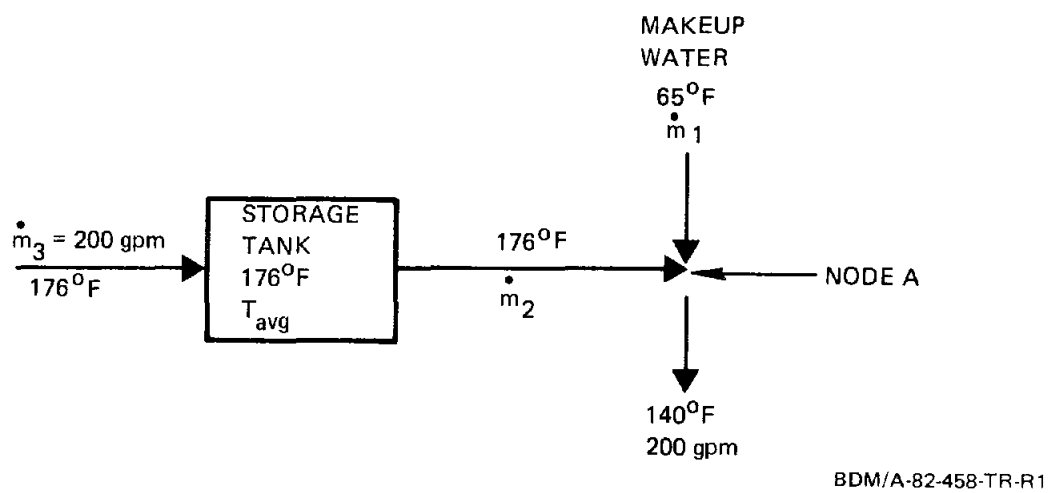

Figure II-16. Tempering Schematic

Energy balance at node A:

$$\dot{m}_1(65) + \dot{m}_2(176) = 200(140)$$

Mass balance:

$$\dot{m}_1 = 200 - \dot{m}_2$$

Then:

$$(200 - \dot{m}_2)65 + \dot{m}_2(176) = 200(140)$$

$$\dot{m}_2 = 135 \text{ gpm } (0.0085 \text{ m}^3/\text{sec})$$

$$\dot{m}_1 = 65 \text{ gpm } (0.0041 \text{ m}^3/\text{sec})$$

The volume of the tank is as follows:

$$V = \frac{Q}{\rho C_p \Delta T} = \frac{41.0 \text{ MBtu}}{8.34 \frac{\#}{\text{gal}} \; 1.0 \frac{\text{Btu}}{\#\,^\circ\text{F}} \; (176 - 65)^\circ\text{F}} = 44{,}300 \text{ gal} \; (168 \text{ m}^3)$$

Time to fill:

$$\tau = \frac{V}{\dot{m}_3 - \dot{m}_2} = \frac{44{,}300 \text{ gal}}{(200 - 135)\text{gpm } 60 \frac{\text{min}}{\text{hr}}} = 11.4 \text{ hr}$$

Time to empty:

$$\tau = \frac{V}{\dot{m}_2} = \frac{44{,}300 \text{ gal}}{135 \text{ gpm } 60 \frac{\text{min}}{\text{hr}}} = 5.5 \text{ hr}$$

Note: Time to fill and empty will be the same for any storage fill rate and the appropriate volume to store the 41.0 MBtu (12 MW hr). Other values are shown in table II-9.

TABLE II-9. STORAGE TANK PARAMETERS FOR VARIOUS INLET FLOW RATES

$\dot{m}$ gpm	TOL-AVG °F	VOLUME gal	ST COST $
200	176	44,200	15,340
210	171	46,400	16,100
225	164	49,700	17,250
250	155	55,000	19,100

The values in table II-9 were plotted in figure II-17 along with the values in table II-8. The total cost of the ST and HX shows a minimum around 215 gpm (0.014 m^3/sec) with a HX area of 640 ft^2 (59.5 m^2),

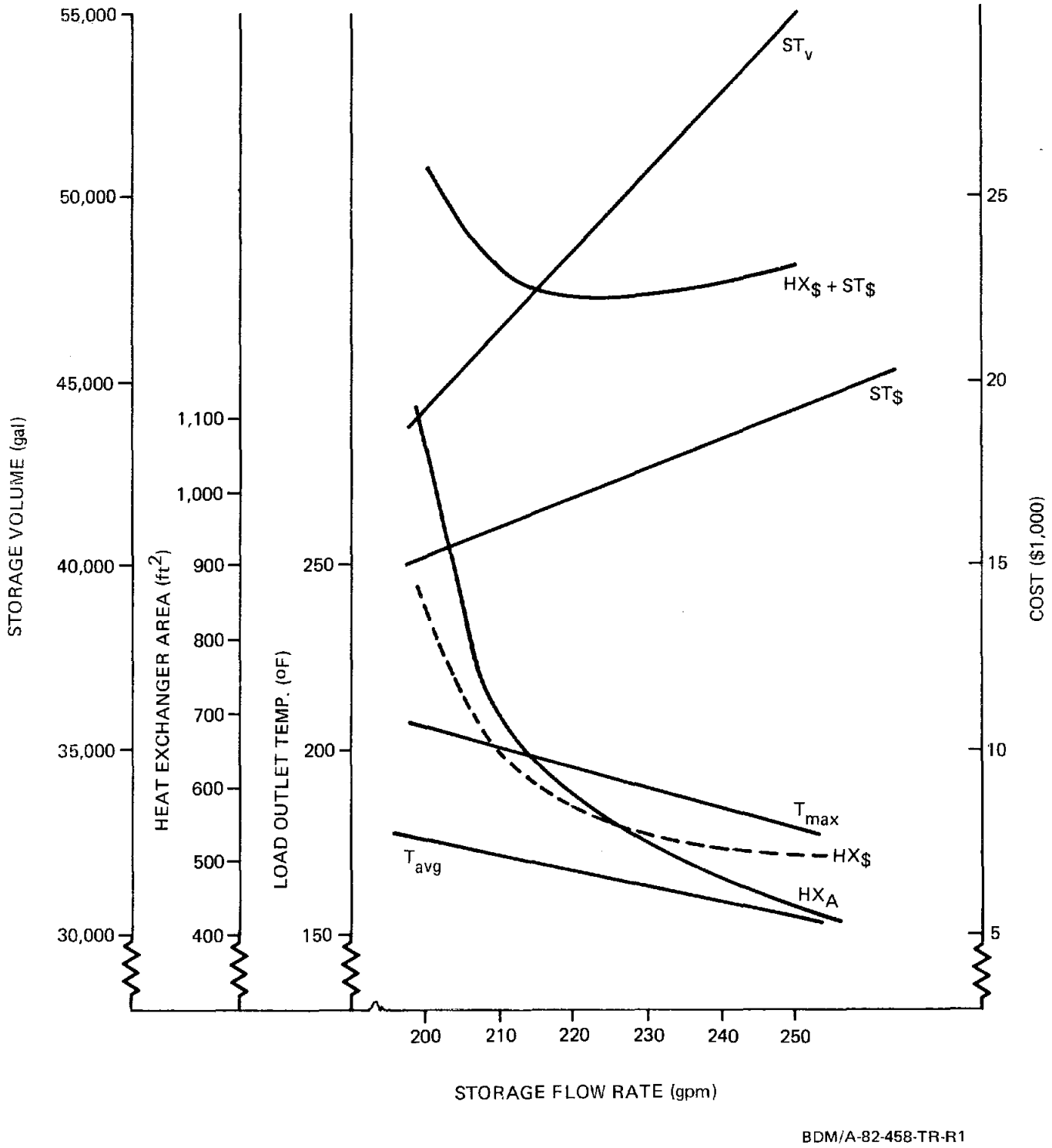

Figure II-17. Cost Trade-Off for Heat Exchanger and Storage Tank

ST volume of 47,500 gallons (180 m^3), and an average ST temperature of 170°F (76.7°C). The heat exchanger would contain 161 plates, Tranter type UX-216. The pass arrangement must be determined by the manufacturer.

The storage costs in table II-9 are based on using an above grade, earth birmed, lined tank shown in drawing M-7. These costs are based on the following cost quotes and quantities:

Burke Rubber Hypalon - 36 mil industrial grade 3136 ft^2 @ \$1/ft^2	\$3136
Burke Rubber liner type 3300 - 20 mil 6484 ft^2 @ \$1/ft^2	\$6484
Foam glass insulation - 1.5" thick 6484 ft^2 @ \$0.5/ft^2-in	\$4863
Site work	\$2000
	\$16,483

The areas are for 47,500-gallon (180 m^3) excavation giving a cost of \$0.347/gallon (\$91.68/m^3).

This storage cost compares to \$0.789/gallon (\$208.45/m^3) for cone roof storage tanks as reported in Richardson Engineering Services estimating standards. In the article "Current Costs of Process Equipment" (Chemical Engineering, April 5, 1982), the cost of 30,000-gallon (114 m^3) 304 stainless steel tanks is given as \$25,000, or \$0.833/gallon (\$220/m^3). These tank costs do not include foundations or insulation. Therefore, the use of a lined earthen storage container appears economical compared to steel tanks.

The heat exchanger costs in table II-8 are based on quotes from Tranter. These quotes correlate well with heat exchanger area to give the relation:

$$C_{HX} = 692.071\ A_{HX}^{-0.358}$$

where C_{HX} is the cost of the plate heat exchanger in $\$/m^2$ and A_{HX} is the heat exchanger area in m^2.

The design of the ST is shown in drawing M-7 and is an above grade, earth bermed, lined tank. The wetted liner that makes up the bottom and top of the tank is made by Burke Rubber Co. and is type 3300 - a 20 mil (0.508 mm) blown extrusion. The top wetted liner sandwiches 18 in by 24 in by 1.5 in (0.46 x 0.61 x 0.04 m) blocks of foamglass insulation with an outside covering of Burke/Hypalon Industrial Grade - 36 mil, 3 ply 6 x 6 - 1000 denier liner (see table II-10) to which each block is fastened. The Hypalon has good weathering characteristics and high strength, but cannot be allowed to contact the potable water. The cover floats on the water and therefore rises and falls with the volume in the ST. The cover is sealed to the bottom liner and pipe penetrations are kept to a minimum in order to make the tank as air tight and waterproof as possible. Foam glass is used as an insulator between the earth and the bottom liner because its high compressive strength can withstand the pressure (0.43 psi/ft or 9725 Pa/m) resulting from the depth of water in the tank. A concrete splash pad at the outlet of the supply line protects the liner. The discharge and drain is located in a concrete sump at the lowest point in the storage tank.

9. Supply Pump (SP-1)

The SP is used to pressurize the hot water (170°F or 76.7°C avg) coming from the storage tank where it is then mixed with pressurized cold water (65°F or 18.3°C avg) from the well pump and tempered to the required 140°F (60°C) at 200 gpm (0.013 m^3/sec) for the load. A pressure regulating valve (PRG-2) on the cold water line is set to maintain the mixed fluid pressure at the required 100 psi (0.69 MPa). The discharge flow rate from the ST varies depending on the temperature of the water. The smallest flow rate occurs when the ST temperature is the highest. This case can be determined by using the maximum heat rate and is shown in figure II-18 as being 197°F (91.7°C) at 215 gpm (0.014 m^3/sec) into the ST.

TABLE II-10. PHYSICAL PROPERTIES OF 36 MIL REINFORCED HYPALON

PROPERTY	TEST METHOD	MINIMUM SPECIFICATION*	TYPICAL AVG. VALUES
Thickness			
1. Total, overall (mils)	ASTM D751	33	36 nominal
2. Min. over scrim (mils)	Optical Method	11	pass
Tensile Properties (each direction)	ASTM D751 Grab Method		
1. Breaking Strength (pounds)			
Fabric		120	180
Membrane Rupture		110	170
2. Elongation at Break			
Fabric		15%	25%
Membrane Rupture		80%	190%
Tear Propagation (pounds)	ASTM D751, Tongue Tear (8" x 8" sample)	25	65
Hydrostatic Resistance (psi)	ASTM D751, Method A Procedure 1	160	220
Puncture Resistance (pounds)	FTMS 101B Method 2031	--	155
Bonded Seam Strength (pounds)	ASTM D751, Modified (12 in./min.)	96	170
Ply Adhesion (lbs./in. width)	ASTM D413 Machine Method Type A (12 in./min.)	10 (or film tearing bond)	pass
Ozone Resistance	ASTM D1149, 1/8" bent loop, 100 pphm, 104°F, 7 day	No cracks at 7x magnification	pass
Low Temperature (refer to para. following)	ASTM D2136, 1/8" mandrel, 4 hrs. @ -40°F	pass	pass at -45°F

*Minimum specification limits are currently proposed industry standards for this type of flexible membrane product. Burke Quality Control monitoring limits for this specification are based on a minimum 97.7% one-sided confidence level.

These specification tables represent current opinion of the data points to characterize the membrane product as produced and are not necessarily appropriate for product performance or installation or engineering design criteria 'per se'. (For example, the low temperature resistance numbers represent qualities for a few minutes at a given temperature and must not be interpreted or extrapolated into installation temperature qualities or comparisons.)

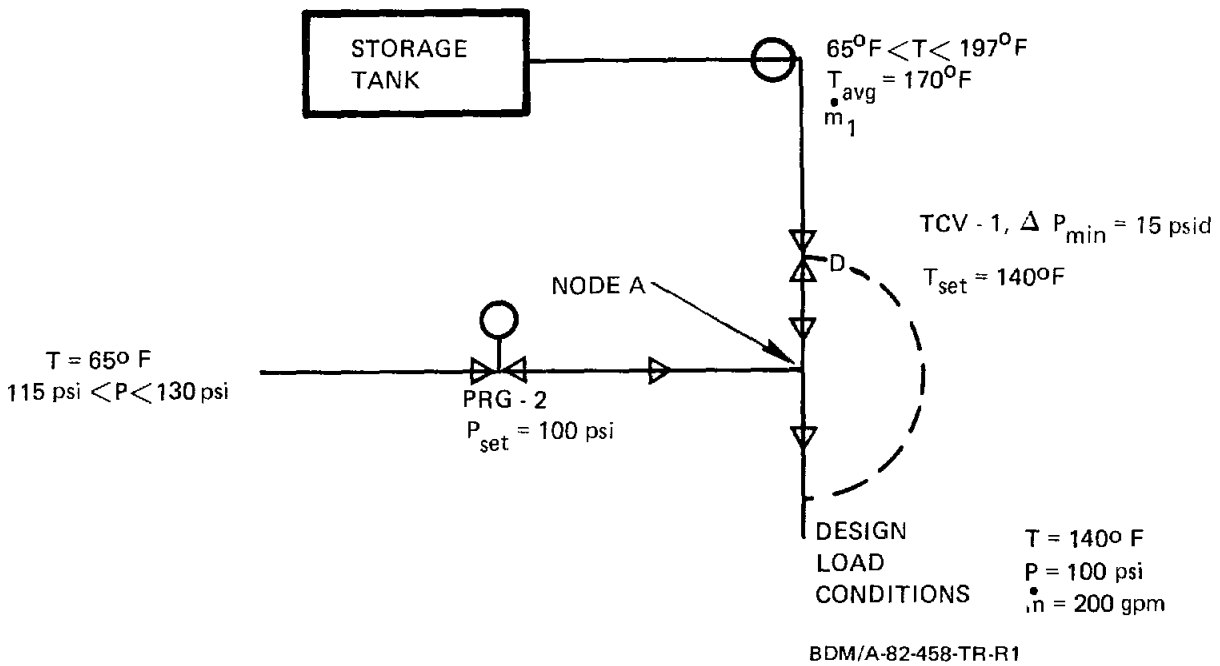

Figure II-18. Tempering & Pressure Drop Schematic

This minimum flow rate can be determined by using figure II-18 as follows:

For node A:

$$200(140) = \dot{m}_1(197) + (200 - \dot{m}_1)65$$

$$\dot{m}_{1_{min}} = 114 \text{ gpm } (0.007 \text{ m}^3/\text{sec})$$

The maximum flow rate would be 200 gpm (0.013 m^3/sec) and would occur when the temperature in the ST is less than or equal to 140°F (60°C). The average flow rate would occur when the temperature in the ST is the average temperature of 170°F (76.7°C):

$$200(140) = \dot{m}_1(170) + (200 - \dot{m}_1)65$$

$$\dot{m}_{1_{avg}} = 146 \text{ gpm } (0.009 \text{ m}^3/\text{sec})$$

In order to size SP-1, the maximum flow rate and the corresponding heat must be known. The maximum flow rate has been determined to be 200 gpm (0.013 m^3/sec). The pressure at node A is maintained at 100 psi (0.69 Pa) by PRG-2. Working back toward SP-1, the pressure drop in the 10 ft (3.05 m) of 3-in (7.62 cm) pipe at 200 gpm (0.013 m^3/sec) is:

$$\frac{8 \text{ ft hd}}{100 \text{ eq ft}} 10 \text{ ft} = 0.8 \text{ ft hd } (0.24 \text{ m hd})$$

Also TCV-1 requires a minimum pressure drop of 15 psid (0.1 MPa) to operate properly and this must be included in the total head. On the suction side of SP-1, there is about 50 ft (15.2 m) of 3-in (7.62 cm) pipe that results in:

$$\frac{8 \text{ ft hd}}{100 \text{ eq ft}} 50 \text{ ft} = 4.0 \text{ ft hd } (1.2 \text{ m hd})$$

The maximum head required for SP-1 would occur when the ST is almost empty and therefore would not provide any positive head for the pump suction. A summary is provided in table II-11. The design conditions for SP-1 are then 270 ft (82.3 m) of head at 200 gpm (0.013 m^3/sec).

TABLE II-11. MAXIMUM HEAD REQUIREMENT FOR SP-1

LOCATION	PRESSURE psi	HEAD ft
Load Requirement at Node A	100.0	231.0
Discharge - 10 ft - 3"	0.3	0.8
TCV-1	15.0	34.7
Suction - 50 ft - 3"	1.7	4.0
ST - Tank Level	0	0
Total	117.0	270.0

Since SP-1 will be pumping relatively high temperature water from a vented tank, the net positive suction head available (NPSHA) must

be determined and compared with the NPSH required (NPSHR) by the pump. If the NPSHA is less the the NPSHR, then cavitation will occur in the pump and may stop flow and/or damage the pump. NPSHA is determined as follows:

$$\text{NPSHA} = \frac{P_1 - P_v}{P} + S - h_f$$

where:

p_1 = pressure on surface of liquid in suction vessel = 14.7 psia (0.1 MPa)

P_v = vapor pressure at liquid temperature of 197°F (91.7°C) maximum = 10.9 psia (0.075 MPa)

$$\rho = \frac{1}{v} = \frac{1 \text{ lbm}}{0.016624 \text{ ft}^3} = 60.2 \frac{\text{lbm}}{\text{ft}^3} \text{ at } 197^\circ\text{F } (964 \text{ kg/m at } 91.7^\circ\text{C})$$

S = vertical elevation distance from pump centerline to surface of suction vessel = 0 ft

h_f = friction loss in suction piping:

The head loss for a flow of 200 gpm (0.013 m^3/sec) in a 3-in (9.62 cm), 50-foot (15.2 m) long pipe is given by:

$$\text{head} = \frac{8 \text{ ft}}{100 \text{ eq ft}} 50 \text{ ft} = 4 \text{ ft hd } (1.22 \text{ m hd})$$

Then:

$$\text{NPSHA} = \frac{14.7 - 10.9}{60.2} \frac{\text{lbf/in}^2}{\text{lbm/ft}^3} \frac{144 \text{ in}^2}{\text{ft}^2} + 0 \text{ ft} - 4 \text{ ft} = 5 \text{ ft } (1.52 \text{ m})$$

A NPSHA of only 5 ft (1.52 m) is very low and would require a specially made pump. However, if a "can-type" pump is specified, it is designed to provide sufficient NPSHA to be greater than the NPSHR for the pump (see figure II-19). The "S" dimension is normally greater than 5 ft (1.52 m) and this makes the NPSHA = 5 + 5 = 10 ft (3.05 m).

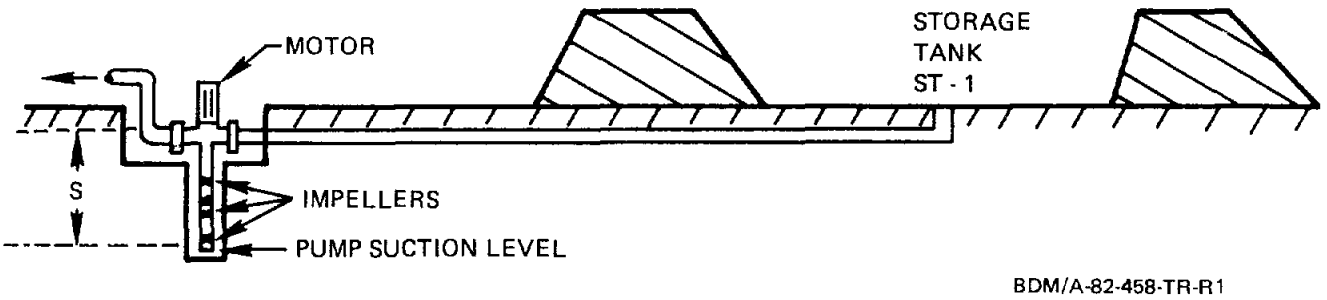

Figure II-19. Suction Level for a "Can-Type" Pump

Can-type pumps have a vertical drive shaft with a motor on top that drives several impellers (stages). Considering the pump curve shown in figure II-20, at 200 gpm ($0.013 m^3/sec$), 11 stages are required with impeller number 2 to provide the 270 ft (82.3 m) of head for the load. The maximum NPSHR is 8 ft (2.4 m) which is less than the NPSHA of 10 ft (3.05 m). The maximum horsepower required is:

$$1.7 \frac{hp}{stage} \text{ 11 stages} = 18.7, \text{ use 25 hp (18.7 kW) motor}$$

Note that the maximum and minimum flow rates were chosen to fall on opposite sides of the best efficiency point (BEP) with the average flow rate as close to the BEP as possible.

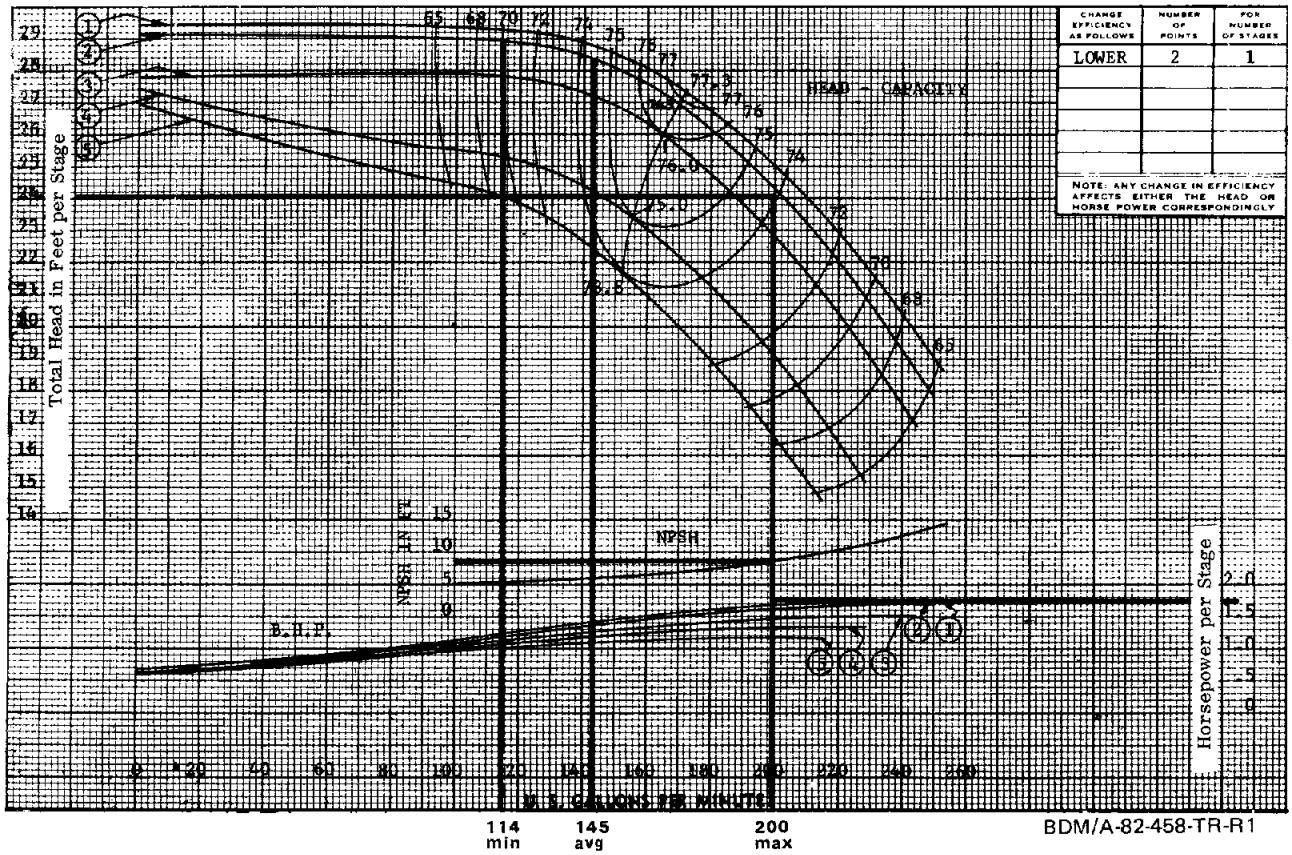

7LB Curve No. 2847296 Impeller No. 2626208 1760 RPM

Figure II-20. Pump Curve for SP-1

10. Circulation Pump (CP-1)

In order to size the circulation pump, the total system head must be determined. A simplified flow resistance network is shown in figure II-21. The following analysis is based on that presented in volume II, chapter IV-H.

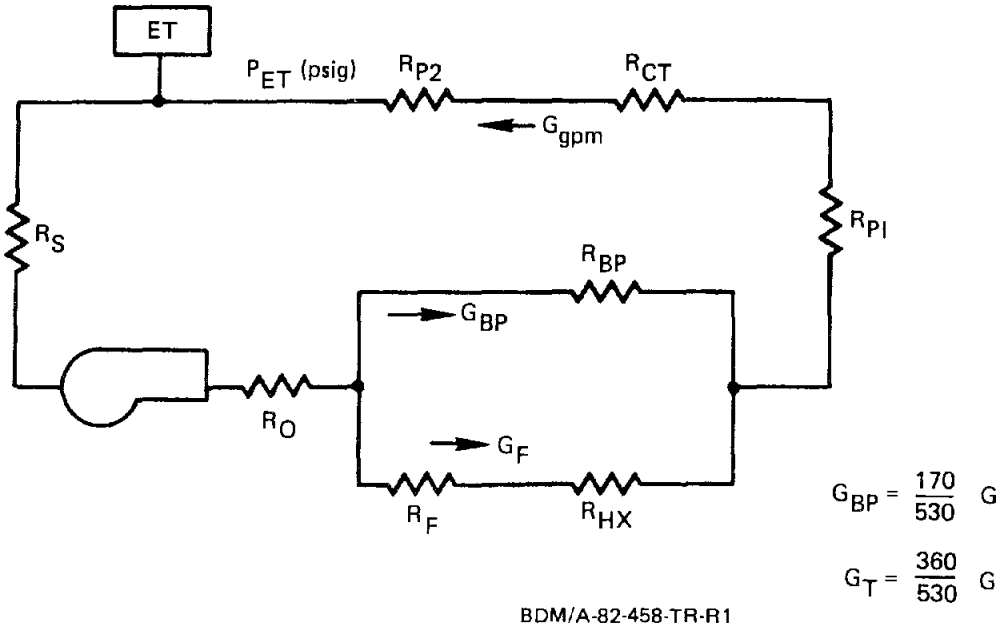

Figure II-21. Flow Resistance Network for the Dixon Plant

The resistance of the collector field is a combination of the resistance of the collectors plus the resistance of the supply and return manifolds from the mechanical skid to the field. This resistance is found by referring to figure II-22 where points "a" and "f" are at the mechanical skid.

The pressure drop from point "a" to "b" is given by:

$$\Delta P_{ab} = \frac{(G_f)^{1.8} \mu^{0.2} \rho^{0.8} L_{ab}}{4.7 \times 10^4 D^{4.8}}$$ (for quantities in English units)

And the resistance is:

$$R_{ab} = \frac{\Delta P_{ab}}{(G_f)^{1.8}}$$

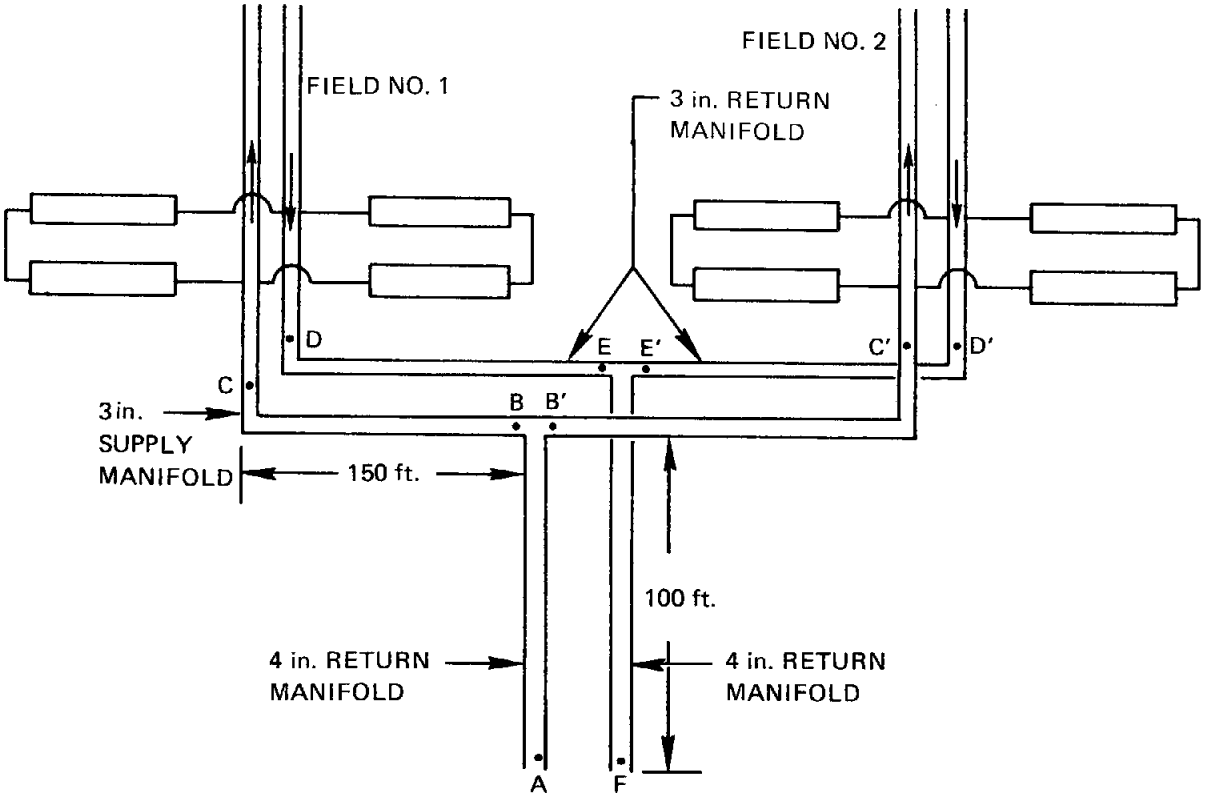

FIELD LAYOUT

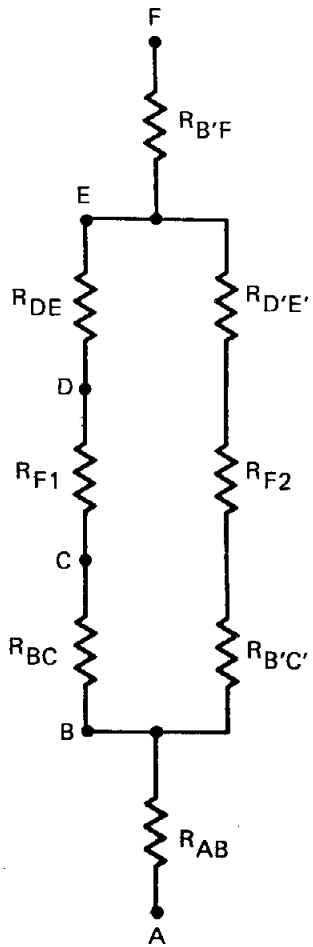

RESISTIVE NETWORK

BDM/A-82-458-TR-R1

Figure II-22. Collector Field Layout and Flow Resistance Network

where:

$D = 4$ in (10.16 cm)

$L_{ab} = 100' + Leq$ (30.5 m + Leq)

$N = 36$ flow loops

The equivalent length of a "T" at point "b" is 21 ft (6.4 m) of 4-in (10.16 cm) pipe so that $L_{ab} = 121$ ft (36.9 m).

The pressure drop from "b" to "c" is:

$$\Delta P_{bc} = \frac{\left(\frac{G_f}{2}\right)^{1.8} \mu^{0.2} \rho^{0.8} L_{bc}}{4.7 \times 10^4 D^{4.8}}$$

Where:

$D = 3$ in (7.62 cm)

$L_{bc} = 150' + Leq$ (45.7 m + Leq)

and Leq, the equivalent length of a 90° bend, is 8 ft (2.4 m) of 3-in (7.62 cm) pipe so that $L_{bc} = 158$ ft (48.2 m). The resistance is:

$$R_{bc} = \frac{\Delta P_{bc}}{\left(\frac{G_f}{2}\right)^{1.8}}$$

The pressure drop from "c" to "d" is:

$$\Delta P_{cd} = R_{f1} \left(\frac{G_f}{2}\right)^{1.8}$$

where R_{f1} is the collector field resistance obtained using the procedure in volume II, chapter IV-H. The total series resistance from "b" to "e" is:

$$R_{be} = R_{bc} + R_{cd} + R_{de} = 2R_{bc} + R_{cd}$$

since $R_{de} = R_{bc}$. The pressure drop from "b" to "e" equals the pressure drop from b' to e' and an equivalent paralled resistance can be found:

$$\Delta P_{be} = \Delta P_{b'c'} = \Delta P_p$$

$$R_{be}\left(G_{f/2}\right)^{1.8} = R_{b'e'}\left(G_{f/2}\right)^{1.8} = R_p\left(G_f\right)^{1.8}$$

$$R_p = R_{be}\left(1/2\right)^{1.8}$$

The total field pressure drop is:

$$\Delta P_{af} = \Delta P_{ab} + \Delta P_p + \Delta P_{ef} = 2\ \Delta P_{ab} + \Delta P_p$$

Since:

$$\Delta P_{ab} = \Delta P_{af}$$

$$\Delta P_{af} = R_f\ (G_f)^{1.8} = 2\ R_{ab}\left(G_f\right)^{1.8} + R_{be}\left(\frac{1}{2}\right)^{1.8}\left(G_f\right)^{1.8}$$

So that:

$$R_f = 2\ R_{ab} + R_{be}\left(\frac{1}{2}\right)^{1.8}$$

Where:

$$R_{ab} = \frac{121\mu^{0.2}\ \rho^{0.8}}{4.7 \times 10^4\ (4)^{4.8}}$$

$$R_{be} = \frac{(2)\ (158)\mu^{0.2}\ \rho^{0.8}}{4.7 \times 10^4\ (3)^{4.8}} + R_{f1}$$

Tranter Corporation has made a number of calculations for sizing a plate heat exchanger under various conditions. Assuming the pressure drop through the heat exchanger can be expressed by:

$$\Delta P_{hx} = \frac{\left(\frac{G_f}{N_c}\right)^{1.8} \mu^{0.2}\ \rho^{0.8}\ L\ N_p}{4.7 \times 10^4\ D^{4.8}}$$

an equivalent $L/D^{4.8}$ can be calculated for the data shown in figure II-23. Thus, the pressure drop is expressed as:

$$\Delta P_{hx} = 9.47 \times 10^{-3}\left(\frac{G_f}{N_c}\right)^{1.8} \mu^{0.2}\ \rho^{0.8}\ N_p$$

where:

N_c = number of flow channels (43 in figure II-23)

N_p = number of passes (2 in figure II-23)

THE BDM CORPORATION

SUPERCHANGER

SPECIFICATION SHEET

CUSTOMER. BDM CORPORATION
ALBUQUERQUE, NM
ATTN: GARY BOND

PROPOSAL NO. SC-19281-32R1
ITEM NUMBER. A
ENGINEER. C.F.
DATE. 10/04/82

MODEL NO. UX-216 FRAME TYPE. UP PLATES PER UNIT. 173

NO. OF UNITS IN PARALLEL. 1 HEAT TRANSFER AREA 690.2 SQ/FT PER UNIT

PART NUMBER. 26UP1731NN3222422

* PERFORMANCE	** HOT SIDE	**** COLD SIDE	**	
FLUID CIRCULATED	* ETH GLY	* WATER	*	
TOTAL FLOW RATE	* 360.00	* 210.00	*	GPM
UNIT FLOW RATE	* 360.00	* 210.00	*	GPM
SPECIFIC HEAT	* 0.853	* 1.000	*	BTU/LB.DEG.F
SPECIFIC GRAVITY	* 1.020	* 0.985	*	
THERMAL CONDUCTIVITY	* 0.240	* 0.374	*	BTU/HR.FT.DEG.F
VISCOSITY	* 1.017	* 0.494	*	C.P. AT AVG. TEMP
INLET TEMPERATURE	* 210.00	* 65.00	*	DEG. F
OUTLET TEMPERATURE	* 119.00	* 202.81	*	DEG. F
PRESSURE DROP	* 24.16	* 7.00	*	PSIG
OPERATING PRESSURE	* 0	* 0	*	PSIG
HEAT EXCHANGED	********** 14274050.0 **********			BTU/HR/UNIT

* CONSTRUCTION		
DESIGN PRESSURE	* 125	* PSIG
TEST PRESSURE	* 188	* PSIG
DESIGN TEMPERATURE	* 250	* DEG. F.
UNIT NET WEIGHT	* 2452.1	* POUNDS

* UNIT DIMENSIONS	
A (MAX) *	24.348
A (MIN) *	22.628
B *	74.625
C *	80.625
T *	1.000

PASS ARRANGEMENTS

HOT *****	COLD
0 X 0	0 X 0
43 X 2	43 X 2

* MATERIALS	
PLATES	* 304
GASKETS	* NBR
NOZZLES	* 316L
FRAME	* CS EPOXY PAINTED
BARS	* STAINLESS STEEL CLAD
BOLTS	* ZN PLATED CS

* REMARKS:

"The **SUPERCHANGER** performance guarantee is based on the accuracy of the data presented above, and the customers ability to supply product and operating conditions in conformance with the above."

BDM/A-82-458-TR-R1

Form DP-SC-100

tranter

TEXAS DIVISION, P.O. Box 2289, Wichita Falls, Texas 76307
Telephone (817)723-7125 Telex 73-4410

Figure II-23. SUPERCHANGER Specification Sheet

Similarly, an expression for the pressure drop through the cooling tower may be obtained by solving for an equivalent $L/D^{4.8}$ when the pressure drop under given flow and temperature conditions is known. Thus, at 150°F (65.6°C) at a flow rate of 530 gpm ($0.033 m^3/sec$) the pressure drop through both cooling towers is 12.6 psi (0.087 MPa) (obtained from Baltimore Aircoil Bulletin 5405/1-0). The general expression is then:

$$\Delta P_{ct} = 5.64 \times 10^{-6} G^{1.8} \mu^{0.2} \rho^{0.8}$$

The distance from the mechanical skid to the cooling tower is 50 ft (15.2 m), so that the pressure drop in the piping from the skid to towers is:

$$\Delta P_{p1} = \frac{G^{1.8} \mu^{0.2} \rho^{0.8} (100 \text{ ft})}{(4.7 \times 10^4) (6)^{4.8}}$$

The pressure drop from the edge of the mechanical skid at the return from the cooling towers to the expansion tank inlet is due to 4 ft (1.22 m) of 6-in (15.24 cm) pipe, one 90° bend with an equivalent length of 16 ft (4.9 m), and one air expander with an equivalent length of 105 ft (32 m). Thus, the pressure drop is:

$$\Delta P_{p2} = \frac{G^{1.8} \mu^{0.2} \rho^{0.8} (125)}{4.7 \times 10^4 (6)^{4.8}}$$

The pressure drop from the expansion tank outlet to the pump inlet is due to one "T" with an equivalent length of 10 ft (3.05 m), 2 ft (0.61 m) of 6-in (15.24 cm) pipe, one 90° elbow with an equivalent length of 18 ft (5.5 m), and a 6-in (15.24 cm) strainer with L_{eq} = 71 ft (21.6 m). Thus:

$$\Delta P_s = \frac{G^{1.8} \mu^{0.2} \rho^{0.8} (99)}{4.7 \times 10^4 (6)^{4.8}}$$

The pressure drop from the pump outlet to the mechanical skid exit to the field is due to two 90° elbows with Leq = 16 ft (4.9 m) each, 23 ft (7 m) of 6-in (15.24 cm) pipe, a reduction from 6 in (15.24 cm) to 4 in (10.16 cm) with L_{eq} = 7.5 ft (2.3 m) so that:

$$\Delta P_o = \frac{G^{1.8} \mu^{0.2} \rho^{0.8} (62.5)}{4.7 \times 10^4 (6)^{4.8}}$$

The pressure drops have been left in terms of the flow rate, viscosity, and density so that the system head curve can be plotted at the average operating temperature of 176°F (80°C), and the start-up temperature of 65°F (18.3°). The gate valve in the parallel leg flowing 170 gpm (0.01 m^3/sec) is set so that the pressure drop across R_{bp} at 170 gpm equals the pressure drop across R_f and R_{hx} at 360 gpm (0.023 m^3/sec). Thus, for any flow rate through the pump, G, the flow rate through the collector field and heat exchanger will be (360/530)G.

The total discharge head, or pressure developed at the pump exit is given by the sum:

$$h_d = \Delta P_o + \Delta P_{af} + \Delta P_{hx} + \Delta P_{p1} + \Delta P_{ct} + \Delta P_{p2} + P_{et}$$

where P_{et} is the gage pressure in the expansion tank. The suction head is:

$$h_s = 5 \text{ psig} - \Delta P_s$$

So the total system head is:

$$H = \Delta P_o + \Delta P_{af} + \Delta P_{hx} + \Delta P_1 + \Delta P_{ct} + \Delta P_2 + \Delta P_s$$

The system head curve is shown in figure II-24 where a safety factor of 10 percent on the total system head was assumed.

When the field is operating at its average or maximum temperature and 530 gpm (0.033 m^3/sec), the pressure in the expansion tank is 5 psig (0.034 MPa) and the vapor pressure of the ethylene glycol solution (figure II-25) is 70 mmHg or 1.35 psia (9300 Pa) at 117°F (47.2°C). The maximum NPSHA is developed under these conditions and is given by:

$$\text{NPSHA(max)} = 5 \text{ psig} + 14.7 \text{ psi} - 1.35 \text{ psia} - \Delta P_s$$
$$= 17.5 \text{ psia} = 40 \text{ ft } (12.2 \text{ m})$$

where ΔP_s = 0.82 psia (5650 Pa).

The minimum NPSHA is developed at start-up when the fluid temperature is 68°F (20°C), the vapor pressure is 0.29 psia (2000 Pa) and the expansion tank pressure is -2 psig (13800 Pa). Then:

$$\text{NPSHA(min)} = -2 + 14.7 - 0.29 - \Delta P_s = 11.5 \text{ psia}$$
$$= 25 \text{ ft } (7.6 \text{ m})$$

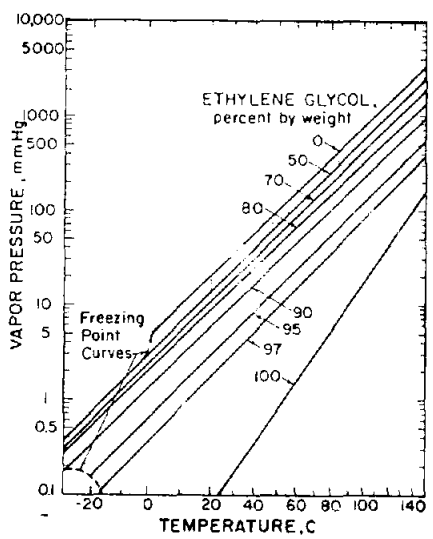

BDM/A-82-458-TR-R1

Figure II-25. Vapor Pressure of Ethylene Glycol Water Mixtures

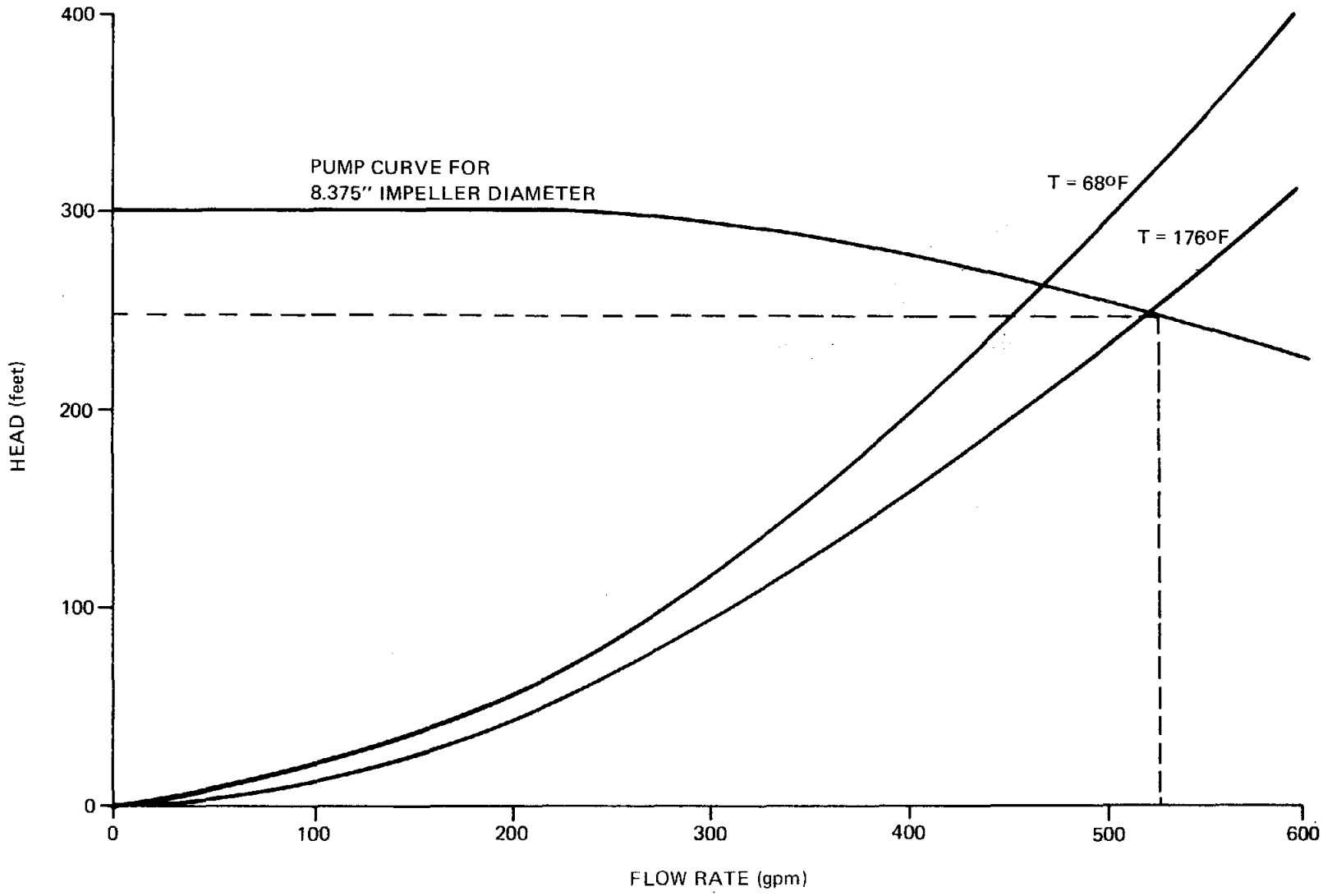

Figure II-24. System and Pump Head Curves

BDM/A 45 R-R1

Under design conditions (and assuming a 10-percent safety factor in the system head) the pump flow rate must be 530 gpm (0.033 m^3/sec) at 175°F (79.4°C) into a system head of 76.2 m (250 ft). Based on the design of the mechanical skid, a horizontal in-line, or double-suction pump is required. Using the pump performance curves provided by Peerless Pump Co. for a double-suction pump at 3550 rpm, a type 2AD11 pump is indicated in figure II-26. However, upon reviewing the pump curve we found that the system operating point is almost off the pump curve. Therefore, we chose the next pump model 3AD10 with the characteristic curve shown in figure II-27.

A pump with a 7.75-in (19.7 cm) impeller develops 212 ft (64.6 m) of head at 530 gpm (0.033 m^3 sec). Using the affinity law:

$$\frac{H_1}{H_2} = \left(\frac{D_1}{D_2}\right)^2$$

$$D_2 = \left[7.75^{\ 2} \ \frac{250}{212}\right]^{1/2} = 8.4 \text{ in } (21.3 \text{ cm})$$

Therefore, an 8.375-in (21.27 cm) impeller must be purchased for this pump. The brake horsepower is about 40 hp (29.8 kW) at an efficiency of 80 percent. The required NPSH is 20 ft (6.1 m), well below the NPSHA. The pump curve has been superimposed on the system head curves of figure II-24. Thus, at start- up, when the fluid is at 68°F (20°C), the flow will be 470 gpm (0.03 m^3/sec) into a system head of 260 ft (79.3 m). At this flow rate, ΔP_s = 0.88 psia (6070 Pa) and the minimum NPSHA is 25 ft (7.6 m), well above the 20 ft (6.1 m) NPSHR.

A 60-cycle, 60-hp (44.8 kW) motor with a service factor of 1.15 is chosen to drive the pump. At 3600 rpm, this requires a 326TS NEMA frame making the entire pump assembly, shown schematically in figure II-28, about 55 in long.

3500 RPM

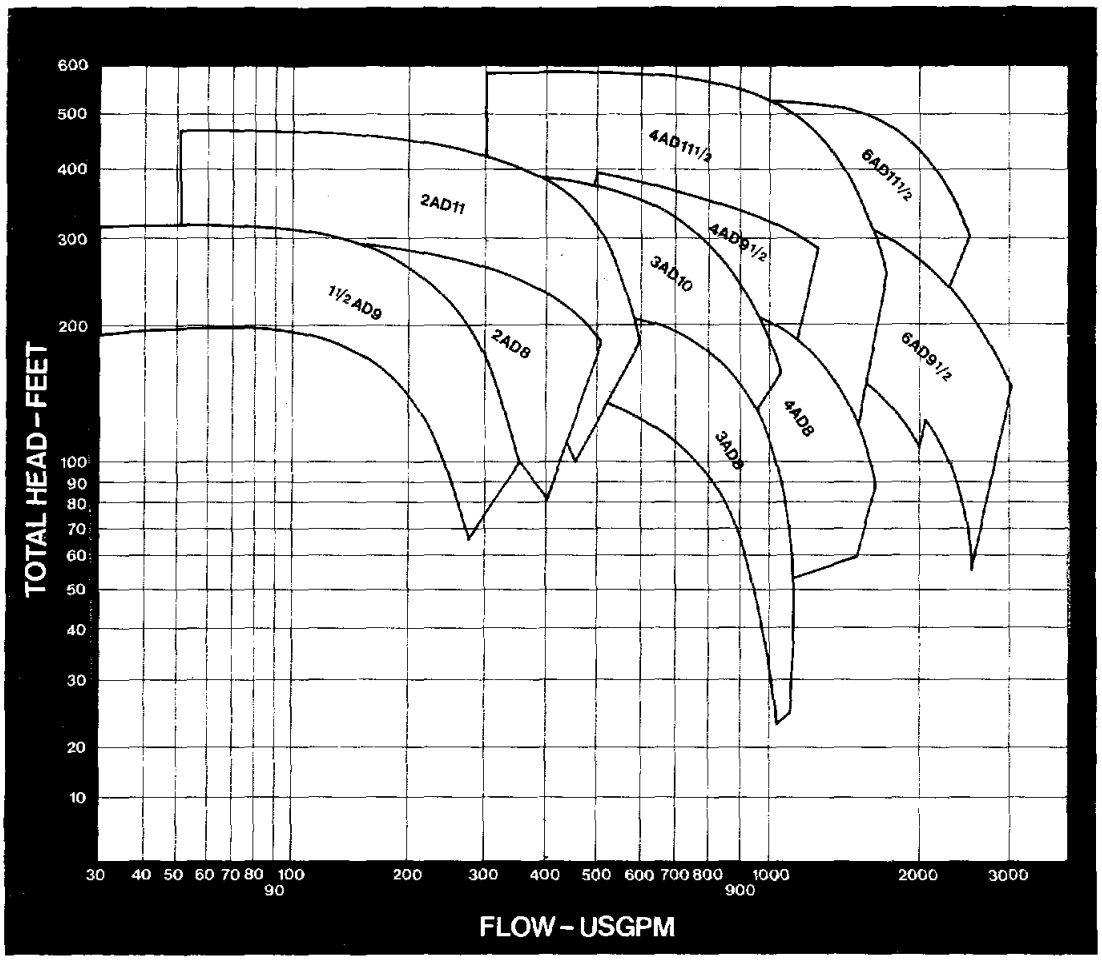

BDM/A-82-458-TR-R1

Figure II-26. Combined Pump Performance Curves for a Single-Stage Horizontal Split Case Double-Suction Pump (Peerless Type AD Pump)

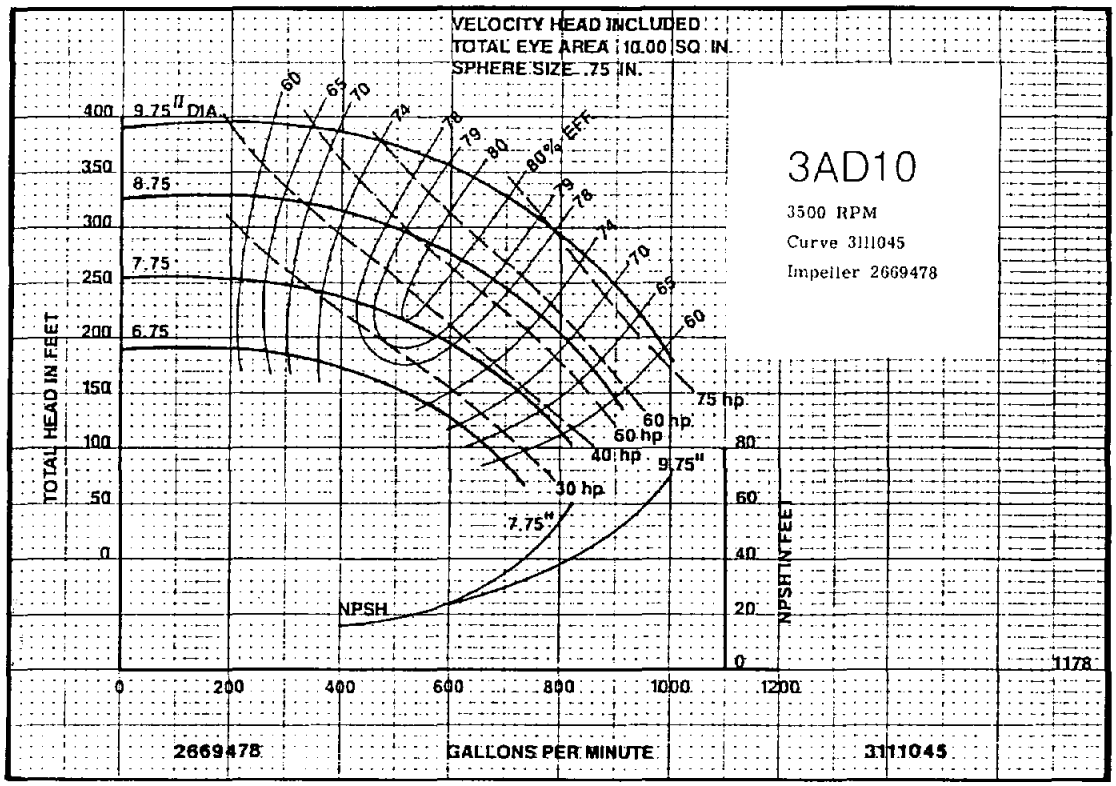

BDM/A-82-458-TR-R1

Figure II-27. Characteristic Pump Head Curves for Peerless Model 3AD10, 3500 rpm Pump

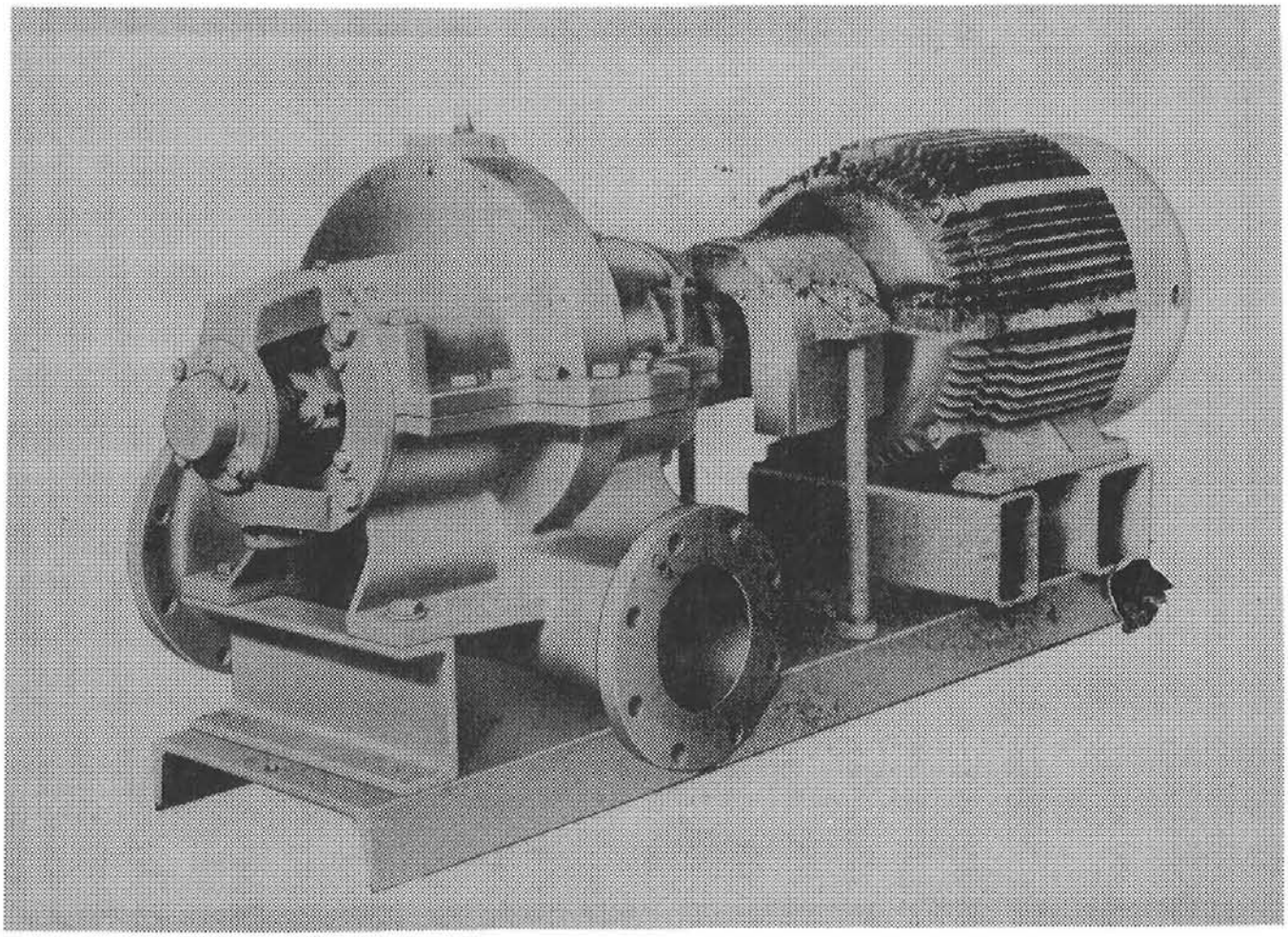

BDM/A-82-458-TR-R1

Figure II-28. Horizontal Split Case, Single-Stage, Double-Suction Pump

D. INSTALLATION PROCEDURES

During the course of the PV-T system design, certain procedures and programs have been identified which are considered to be important in the installation and final start-up of the system, but which are not part of system operation and maintenance once the system is in operation under plant cognizance. These procedures and programs apply principally to the tasks performed by the system supplier.

Presented and discussed in the following paragraphs are procedures applicable to the transportation and delivery of system hardware, onsite construction and assembly, and system preparation and checkout. It is assumed that arrangements have been made between the Dixon, California meat-packing plant management and the system supplier for advance planning and scheduling of the system hardware delivery and onsite coordination of activities during construction and assembly and system start-up and checkout. It is envisioned that Dixon management will designate a PV-T project engineer to interface directly with the system supplier's general job superintendent.

1. Transportation and Delivery

a. General

The PV-T system hardware will be transported to the installation site from four principal points. The solar collector materials and PV cell subassemblies will be shipped directly from the E-Systems factory in Dallas, Texas to the Dixon Plant site. The storage tank and cooling tower assemblies will be shipped from their respective manufacturers to the site. The remainder of the system hardware, with minor exceptions will be shipped from the supplier's home base to the site which is in consonance with the PV-T design concept which emphasizes the offsite (shop) fabrication, preassembly, and test of system components and subassemblies to the greatest extent possible.

b. Packaging and Shipping

(1) Collector Materials

The E-Systems collector materials will be shipped from the factory in Dallas, Texas to the user site by commercial trucks.

The 720 arrays will be packaged and shipped in racks of three, each weighing approximately 3000 lbs (1360 kg). The receiver tubes with PV cells attached will be preassembled on the collectors. Most equipment such as the post assemblies and assembly axle blocks, will be shipped on pallets weighing no more than 800 lbs (362 kg). It is estimated that approximately 121 truckloads (six arrays per truck) will be required to ship the collector materials.

(2) Skid Subassemblies

All final assembly, testing and cleaning will be performed before the mechanical skid is prepared for shipment. The skid has been sized and the equipment arranged to facilitate handling and road transportation. The shipping weight will be approximately 5000 lbs (2268 kg) with the expansion tank, heat exchanger, pump and piping well distributed to facilitate balance on the 10 ft by 25 ft (3 m by 7.6 m) steel I-beam base. The steel base incorporates six lifting lugs for crane handling with a spreader bar. Prior to shipment, the flanged ends of the ethylene glycol (EG) circulation loop and the domestic water (DW) circulation loop piping will be braced to prevent movement during handling and transportation.

The packaged cooling towers incorporate lifting lugs and will be handled by crane in the same manner as the mechanical equipment skid.

(3) Storage Tank

Liner panels for the 47,500-gallon (180 m^3) storage tank are factory fabricated into large panels that are accordion-folded and then rolled up on a core and strapped to a 5 ft x 6 ft (1.52 m x 1.83 m) wooden pallet. These pallets weigh approximately 5000 lbs (2268 kg) and are shipped with a corrugated cover to prevent damage and to protect the folded panels from sunlight and heat.

c. Materials Delivery

(1) Collector Materials

The collector materials will be delivered to the Dixon plant at such time as the required PV-T site preparation is complete (grading, foundations, service roads and drives, etc.) and the system supplier is mobilized onsite and ready to proceed with hardware assembly. The array racks, post assemblies and assembly axle blocks will be unloaded with requisite lifting equipment and placed so as to minimize handling distances during installation.

(2) Other Materials

The shop fabricated components and subassemblies and other materials will be delivered at a time roughly coinciding with completion of the erection and assembly of the collector arrays. The skid subassemblies will be unloaded from the trucks onto the prepared foundation pads and properly positioned for hookup.

Upon arrival of the storage pond liner shipment, care should be excercised in the unloading to avoid damage to the panels. The pallets should be inspected for damage. Covered storage should be provided for the liner panels and they should not be removed from their protective covers until installed.

2. Onsite Organization and Management

A job superintendent and assistant who are full time employees of the PV-T supplier and are intimately familiar with the system will be responsible for overall onsite direction and supervision during installation and checkout.

It is assumed that the bulk of the labor and skills required for the system installation can be procured in the general locale of the Dixon meat plant. Key mechanical and electrical tasks will be accomplished by system supplier mechanical and electrical subcontractors.

3. Construction and Assembly

The onsite construction and assembly for the installation of the PV-T system can be broken down into a number of general tasks. The

procedures involved in carrying out these tasks are discussed in the following paragraphs. These procedures assume that the Dixon plant site has been prepared in accordance with the drawings and specifications.

a. Installation of the Collector Field

The installation of the collector arrays, the storage tanks, the ethylene glycol/water loop piping and domestic water piping are major tasks that require lead work by the system supplier.

(1) Collector Array Installation

Each collector array is composed of four collector modules that are factory-assembled complete with receiver tubes and PV cells mounted. Each row in turn consists of five collector arrays supported on four idler post assemblies and one main drive post and one intermediate drive post assembly. The initial step in the assembly of the row is the placement and alignment of the idler and drive posts. After the posts have been aligned and the mounting bolts tightened the post assembly axle blocks are installed and the collector arrays mounted. The interconnect horizontal drive shaft is then installed on each post.

The next step is to level all array units by rotating the upper speed reducer input shaft the install the frame splices. The end pulley assemblies on each end array unit are now installed and the vertical drive shafts pinned to the respective lower gear box.

After securing the modules on the center array unit to prevent rotation, align all the modules in the array unit to the center array unit using the alignment tool provided. The collector drive bar splice is now installed between the aligned array units.

The final step in the assembly of the collector array row is the installation of the tilt sensor and connection of the cabling from the sensor to the local box on the main drive and the interconnection of the DC power cables in series between arrays in the electrical loop.

(2) Installation of Array Loop Pipe Sections

After the collector array rows have been assembled, the shop fabricated 1-in (2.54 cm) diameter pipe sections with in-line components are installed to connect 10 arrays in a circulation loop. The loops are center tapped to the 3-in (7.62 cm) supply and return manifolds. Installed in each loop are two end-loop sections and one each inlet and outlet section at the manifold end of the loop. Shop fabricated supports are installed on prepared foundations to support the end loop and inlet and outlet pipe sections.

b. Installation of EG Circulation Loop Field Pipe Sections

This work consists of the assembly and hookup of the following field piping:

(1) Six-inch (15.24 cm) and 4 in (10.16 cm) diameter pipe from the mechanical skid to the collector field.

(2) Six-inch (15.34 cm) diameter pipe from the mechanical skid to the cooling towers.

(3) Four-inch (10.16 cm) diameter pipe from the collector field to the mechanical skid.

Various sections of the EG field piping are shop fabricated to facilitate the site work. Shop fabricated pipe supports and anchors are installed on prepared foundations at points required. The assembly of this piping requires a combination of welded and bolted flanged connections. All EG circulation loop field fabricated piping will be thoroughly cleaned as work progresses to minimize harmful contamination of the loop.

c. Installation of DW Circulation Loop Pipe Sections

This work consists of the assembly and hookup of the following piping:

(1) Three-inch (7.62 cm) diameter pipe from the well pump to the mechanical skid.

(2) Three-inch (7.62 cm) diameter pipe from the mechanical skid to the 47,500-gallon (180 m^3) storage tank.

(3) Three-inch (7.62 cm) diameter pipe from the storage tank pump to the wash pump.

(4) Three-inch (7.62 cm) diameter pipe in the temperature control by-pass loop.

Like the EG circulation loop, various sections are prefabricated and the same cleaning and assembly precautions apply.

d. Installation of the Storage Tank

The liner panels for the storage tank are customarily accordion-folded and rolled on a core, packaged and identified for proper placement in the prepared pit. A panel layout drawing indicates panel positioning as well as unroll-and-unfold directions. Panels will remain covered and protected from direct sunlight until ready for spreading. Only panels for 1 day's field seaming will be spread. Spread panels should be sand bagged until the seaming operation is complete. The perimeter of the liner is anchored in an anchor trench on the top of the tank berm. The tank cover will be installed immediately to protect the liner from environmental degradation.

e. Installation of Electrical/Control Distribution

This work consists of the installation and hookup of the underground direct burial cabling, the above ground rigid conduit, transformers, inverters, and switchgear for electrical power supply and array power takeoff. The following field connections are required:

(1) Three-wire DC direct burial cable from each of the 72 subfield electrical loops to the 18 subfield M&S enclosures. There are four electrical loops to each subfield M&S.

(2) Two-wire DC direct burial cable from each of the 18 subfield M&S enclosures to field A and B M&S enclosures in the Electrical Control Building (nine subfields to each field M&S).

(3) Busses from M&S A and B to inverter A and B.

(4) Busses from inverter A and B to AC switchgear and transformer.

(5) Installation of AC distribution panels and utility outlets.

(6) Two-wire AC direct burial cable from distribution panel to field transformers.

(7) Two-wire AC direct burial cable from transformers to drive and intermediate drive posts.

(8) UPS to the hazard panel and the master tracking controller.

(9) IPS to the AC panelboard.

The electrical/control distribution work will be started as soon as the collectors, transformers, inverters, electrical control building and other materials are onsite and installation has proceeded to a point permitting phased electrical connections.

After electrical/control distribution system has been installed and the system energized, a thorough operational test will be made to ensure the operational integrity and safety of the system.

CHAPTER III
ALBUQUERQUE, NEW MEXICO PUBLIC SCHOOL

A. INTRODUCTION

1. Plant Description

The Albuquerque, New Mexico public school consists of derived characteristics based on "typical" schools and a derived load profile for space heating and domestic hot water loads. The school is a two-story, 58,000 ft^2 (17678 m^2) building defined as typical in reference III-8 of volume 1. Other characteristics of the building and the load profiles are given in volume I.

The flow schematic in figure III-1 shows a boiler to provide space heat and a separate fossil fueled hot water heater. This allows hot water to be available during periods of no space heat load without firing up the large boiler. For the school modeled using SOLCEL the flow rate through DHW is 35.8 gpm (2.22 kg/sec) and the flow rate through the space heating system is 57.3 gpm (3.51 kg/sec). This provides the required flow to meet the peak demands. The space heat boiler is maintained at 30 psig (2.87 MPa) to provide hot water at a temperature of about 215 to 230°F (102° to 110°C). The domestic hot water supply temperature is 140°F (60°C).

The daytime load varies between DHW only and DHW plus space heating. Domestic hot water is almost a constant requirement throughout the day. There is practically no nightime or summer load. The entire system is closed loop in which water returning from the loads is mixed with makeup water and reheated. The temperature of the return water depends on the load; if the load is small the temperature of the return water may be greater than the array outlet temperature. Under these conditions the PV-T system is bypassed by the thermal loads and provides only electrical power with cooling performed at the cooling tower.

2. Design Trade-off Studies

Before the design of the Dixon plant was completed, several trade-off studies were performed for the Albuquerque school to determine

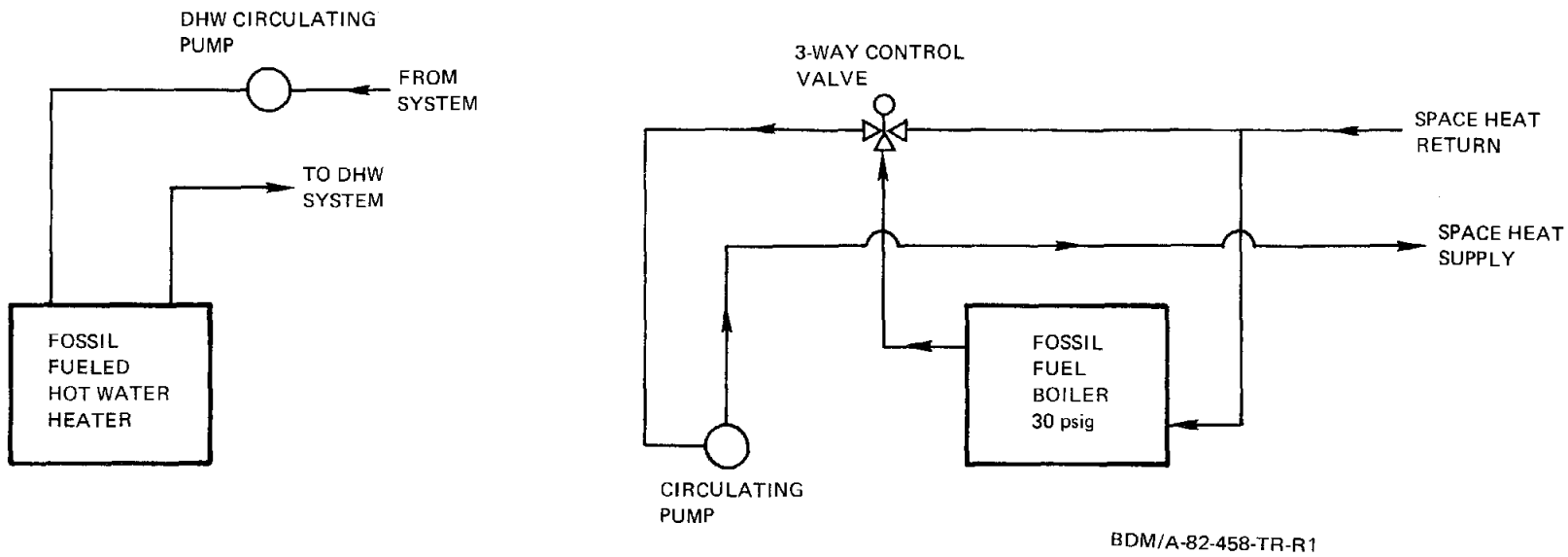

Figure III-1. Typical School Flow Schematic

the feasibility of using thermal storage. Initial studies used 12 LFF arrays per row and a variable volume thermal storage tank in series with the load (as shown for the Dixon plant in figure II-5). This storage configuration never became adequately charged, and the return temperature from the load was often too high for proper PV-T operation. That is, during the day the thermal load was so small that the energy delivered back to the PV-T system was almost as great as the energy available. Thus, the series storage configuration did not improve the LCCR over that with no storage.

A constant volume parallel configuration was then analyzed in which the storage tank was placed in parallel with the load. In this configuration, storage could be charged during the day, while the load was being augmented by PV-T, and discharged at night. However, this also involved performing a trade-off study between storage volume and the flow rate through the storage tank.

The results of several simulations are shown in figure III-2. These results indicate that the optimum configuration is to have no storage. Subsequently we found that a delta-T strength length of less than 11 arrays per row is necessary to meet the temperature and pressure limitations of the collector. Based on electric requirements, to be discussed later, a row length consisting of nine arrays per row is chosen as the design point. This configuration was analyzed using SOLCEL and the results are shown in figure III-2. A significant improvement in LCCR is indicated over the 12 array per row configuration.

3. Generalized Design Concept

The system conceptual design is shown in figure III-3. Parasitic electrical power associated with the pumps, cooling tower, and PV-T tracking system is added to the existing electrical load. The thermal portion of the PV-T system is interfaced to the existing plant at the space heat return line and through a heat exchanger/storage tank in the domestic hot water system. If the heat exchanger outlet temperature (TOL) or array outlet temperature (TIC) is less than the load return temperature (TIL), then the flow bypasses the PV-T system and goes directly

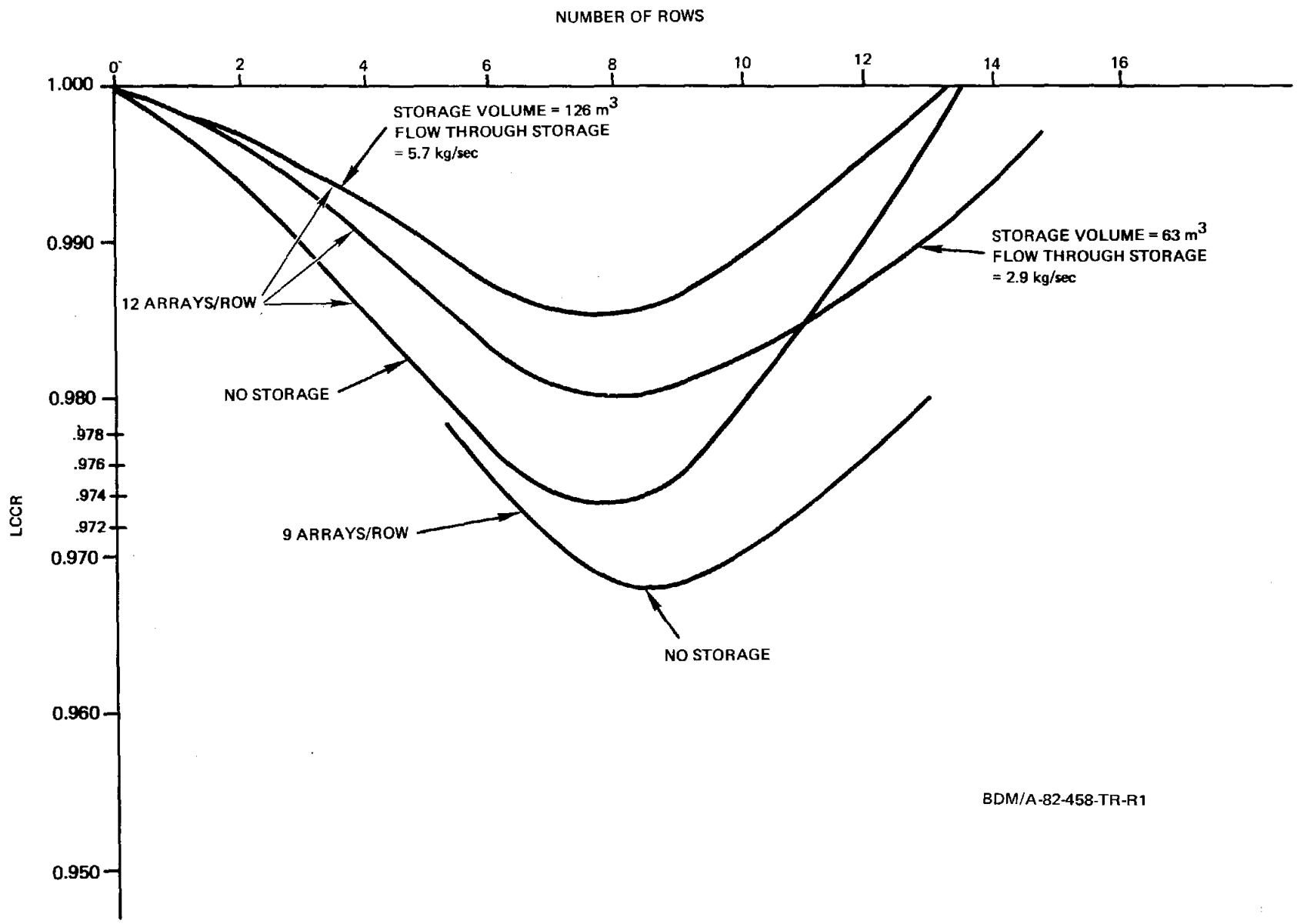

Figure III-2. Array Size Versus LCCR for Various Storage Volumes and Row Lengths

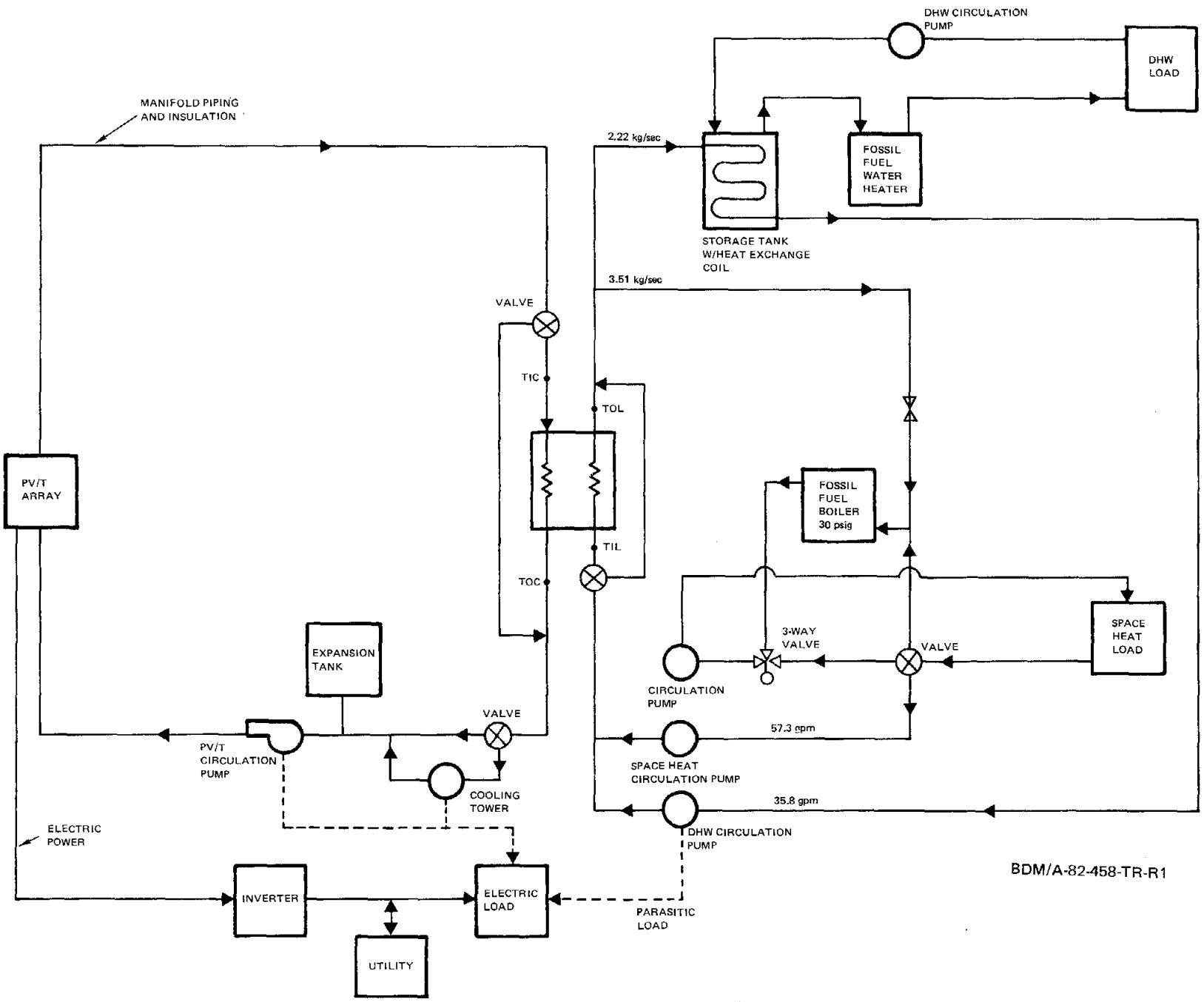

Figure III-3. Overall Conceptual Design for the Albuquerque, New Mexico School

"Use or disclosure of proposal data is subject to the restriction on the Title page of this Proposal." (1966 DEC)

to the boiler for the space heat load, or the hot water heater for the hot water load. Otherwise, the returns from the loads are combined and pass through the heat exchanger. The flow then splits to go to heat domestic hot water and to supply the boiler. Since the space heat load requires temperatures of 215 to 230°F, (102 to 110°C) and since the PV-T system is limited to 210°F (98.9^{o}C), the system always acts as a pre-heater for the boiler. Domestic hot water requires 140°F (60°C) water so the system can provide the full load requirement; the fossil fuel water heater acts as an auxiliary heater during periods of low insolation.

If the array outlet temperature is greater than 210°F (98.9^{o}C) the flow is routed through the cooling tower to decrease the array inlet temperature. The flow rate through the array field is constant at 40 gpm (2.45 kg/sec). The flow through the load side of the heat exchanger varies depending on the load requirements. There are two flow requirements, 35.8 gpm (2.22 kg/sec) for DHW and 57.3 gpm (3.51 kg/sec) for space heating. The flow through the heat exchanger may be any combination of these. The DHW flow alone occurs 63.3 percent of the time, and the combination of DHW plus space heat flow occurs 36.7 percent of the time. During the summer, holidays, and weekends the PV-T system produces electricity for sell-back to the utility and is cooled by flow through the cooling tower.

The SOLCEL simulations indicate the annual electrical and thermal energy characteristics of the system as shown in table III-1. The system electrical efficiency (energy provided to the load, parasitics and sell-back versus available insolation) is 10 percent. The system thermal efficiency (energy provided to load versus insolation) is 24 percent.

In the following sections a detailed system design is provided along with the analyses used to design the system and choose and size components. Although the sections have been divided into electrical and mechanical design, several iterations were performed to determine the proper row length based on voltage and current requirements, temperature increases, and voltage mismatch losses due to the temperature increase along a row. These trade-offs should become clear in the following sections.

TABLE III-1. ALBUQUERQUE SCHOOL ANNUAL INSOLATION, ELECTRICAL AND THERMAL ENERGY CHARACTERISTICS

INSOLATION (kW-hrs)	
Total Direct Normal Radiation Available	1.91×10^6
ELECTRICAL CHARACTERISTICS (kW-hrs)	
Electrical Load	1.26×10^6
Total Array DC Electrical Energy	2.14×10^5
Array AC Electrical Energy to Load	1.14×10^5
Backup AC Energy to Load	1.15×10^6
Electrical Parasitic	1.28×10^4
Sold Back AC Energy	6.31×10^4
THERMAL CHARACTERISTICS (kW-hrs)	
Thermal Load	2.74×10^6
Total Array Thermal Energy	9.77×10^5
Array Thermal Energy to Storage	0
Stored Thermal Energy to Load	0
Backup Thermal Energy	2.29×10^6
Heat Rejected at Cooling Tower	5.2×10^5
LOAD DISPLACEMENT AND EFFICIENCIES	
Percent of Electrical Load Displaced	9 %
Percent of AC Electrical Energy Sold Back	33 %
System Conversion Efficiency (DC to AC)	89 %
Array Electrical Efficiency	10 %
Percent of Thermal Load Displaced	16 %
System Thermal Efficiency	24 %

B. ALBUQUERQUE PUBLIC SCHOOL PV-T SYSTEM ELECTRICAL DESIGN

The following sections summarize the PV-T system electrical design. The text is keyed to electrical drawings E-1 through E-6 contained at the end of this chapter.

1. Electrical System Overview

The electrical portion of the Albuquerque public school PV-T system is called the photovoltaic power system (PPS). A block diagram of the PPS is shown in drawing E-1. The DC output of the PV system is rated as 101.1 kW (248.7 V and 406.4 A) at 1000 W/m^2 with an inlet fluid temperature of 25^oC. The expected AC output of the system is 88.9 kW assumming an overall power processing efficiency of 88 percent. The PPS operates interactively with the electric utility service to the school. The output voltage is 277/480 VAC, three phase, four wire. The elements in the block diagram will be described briefly in this section and presented in more detail with rationale for component selection in subsequent sections. Critical electrical components are specified on the appropriate drawings and summarized in table III-2.

The DC portion of the PPS, called the PV field, consists of eight rows of PV arrays divided into two subfields. Each subfield consists of four electrical rows and a subfield maintenance and safety (M&S) enclosure. Each electrical row contains nine E-Systems linear Fresnel lens arrays. (The term array is used by E-Systems to describe a single-frame assembly supporting four linear Fresnel lens collectors. Therefore, we have also followed this nomenclature and have defined the total number of arrays interfacing with an inverter as a field.) Each subfield M&S enclosure includes an externally mounted safety switch which provides for interconnection of the four electrical rows, measurement of electrical row parameters, isolation of the subfields and of the individual rows, and protection from lightning and other transients.

Two sets of DC field cables are routed to the electrical control building where they are connected through separate safety switches to the inverter. The 100-kW inverter converts the DC power into

TABLE III-2. MAJOR PPS ELECTRICAL COMPONENTS

ITEM NO.	SUBSYSTEM/ITEM DESCRIPTION	(MFR.) PART NO. (OR EQUIVALENT)	QTY.
1.0	Subfield Maintenance and Safety Enclosure/NEMA 3R Enclosure (48"H x 36"W x 18"D)		2
1.1	Resistor, 98 kΩ, 1 W, 1%	(DALE) WWA-416	8
1.2	Resistor, 2 kΩ, 0.1 W, 1%	(Dale) EMF-50-10	8
1.3	Resistor, 0.01 Ω, 50 W, 1%	(Dale RH-50	8
1.4	Safety Switch, 2 Pole, 600 VDC, 60 A	(Square D) HU-262	8
1.5	Varistor, 420 V	(GE) V320-PA-40A	24
1.6	Blocking Diode, 1200 V, 70 A	(IR) IRKE 71-12	16
1.7	Busbar, 400 A		4
2.0	Subfield Maintenance Switch Safety Switch, 2 Pole, 600 VDC, 400 A, Fusible, Outdoor	(Square D) H-265R	2
3.0	Subfield Disconnect Safety Switch 2 Pole, 600 VDC, 400 A	HU-265	2
4.0	DC-AC Inverter, 100 W, 480 VAC, 3 Phase, 4 Wire	(DECC)	1
5.0	Circuit Breaker, 480 VAC, 3 Phase, 150 A	(Square D) KAE361505	2
6.0	Service Transformer, 480/120 V, Single Phase 50 kVA, Outdoor Type	(Sorgel) 50S3H	1
7.0	Interruptible Power Supply/ Diesel Generator Set, 45 kW with 6-Cylinder, 301 cu in. Engine, 270 A-H, 12 V, Lead Acid Batteries, 50 gal Fuel Tank	(Onan) 45.0 DYJ-15R	1

TABLE III-2. MAJOR PPS ELECTRICAL COMPONENTS (Concluded)

ITEM NO.	SUBSYSTEM/ITEM DESCRIPTION	(MFR.) PART NO. (OR EQUIVALENT)	QTY.
8.0	Uninterruptible Power Supply/ Inverter, 3 kVA, 120 VAC, 1 phase 60 Hz with GEL-CELL Sealed Batteries and Rectifier, 120 VAC to 133 VDC	(Gould) 5247A-1	1
9.0	Master Controller and Hazard Station (Includes Micro-computer and Hazard Relays)	Not Defined	1

277/480-VAC, three-phase, four-wire, 60-Hz power. The inverter also contains DC and AC monitoring and protection switchgear. The AC output of the inverter is routed through the PPS AC circuit breaker to the school building.

In the building the PPS power is interconnected through a circuit breaker to the main AC panelboard which supplies the building loads and also the AC power for the PPS. A meter is provided between the utility interface switch and the main AC panelboard to measure the total power required by the school building and the PPS. The main AC panelboard indicated in the drawing is part of the standard building equipment. The public utility enters the school building through two meters. The meters are connected in opposite directions to measure the flow out of and into the utility. The utility service is also routed to the main AC panelboard.

The AC power for the PPS is routed to the AC panelboard in the electrical control building. A meter on this line measures the power required by the PPS. The AC power is stepped down as appropriate for the various electrical control building and field power requirements.

2. Field Design

a. Determination of PV-T Field Size and Layout

Sizing trade-off analyses performed using the SOLCEL-II computer code indicated that the lowest life cycle cost for the system would be obtained using approximately 70 to 80 E-Systems arrays arranged in eight- to 10-array thermal loops with a differential in inlet to outlet fluid temperature of $42^{o}C$ at 1000 W/m^2.

As was done for the Dixon PV-T system, the field DC voltage was matched to the inverter operating voltage window and the full operating voltage was developed over an electrical string or row which corresponds with the thermal loop. This results in a nine-array electrical row. The resultant electrical field layout is shown in drawing E-2 and the rationale for the nine-array rows is presented in the next paragraph.

Because the total field size results in a power of 101.1 kW with the fluid temperature differential of 42°C, it was decided to use a 100-kW inverter from the Delta Electronic Control Corporation (DECC). The inverter selection rationale and specifications are presented in subsection 4 of this electrical section. The inverter has an input operating voltage range of 200 to 290 V. It is desirable to operate the array near the midpoint of this voltage range. Since each of the E-Systems collectors shown in the array detail in drawing E-2 produces 30.1 V and 12.7 A at 25°C constant fluid temperature, 10 collectors connected in series would exceed the 290 maximum allowable voltage for the inverter. In addition, since a significant voltage will be lost due to cell temperature mismatch because of the fluid temperature differential of 42°C, eight collectors in series would not produce enough voltage at high ambient temperatures. Therefore, it was decided to use the nine-array option with four collectors connected in parallel in each array as shown in drawing E-2 to produce 270.9 V at 25°C. These analyses indicate that the string voltage loss is proportional to temperature and will be 8.2 percent. The string voltage will be approximately 249 V for the 42°C fluid temperature differential.

An additional analysis was performed to determine the DC operating voltage range of the fields under extremes of illumination and temperature to ensure that it remains within the 200 to 290 V operating range of the inverter. It was determined from the SOLCEL runs for the Albuquerque public school PPS that the inlet temperature of the fluid will fall within the range 20°C to 60°C over the course of the year and the insolation will not exceed 1000 W/m^2. Assuming the lower limit of the tracking is 100 W/m^2 and also assuming a temperature differential from fluid to cell of 14°C at 1000 W/m^2, the voltage matrix in table III-3 was developed. The results are shown graphically in figure III-4. The voltage curve for each fluid temperature peaks at about 300 to 400 W/m^2 because the higher expected voltage at 1000 W/m^2 is offset by the higher inlet to outlet temperature differential which causes the voltage mismatch previously discussed.

TABLE III-3. DC OPERATING VOLTAGE MATRIX FOR ALBUQUERQUE PUBLIC SCHOOL PV/T SYSTEM

DC OPERATING VOLTAGE (V)	INSOLATION (W/m^2) 100	200	300	350	400	500	700	800	1000
T_F(INLET) (°C/°K)	DC OPERATING VOLTAGES (V)								
20/293	262	267	268	268	267	266	262	260	255
25/298	255	260	261	261	261	260	256	254	249
30/303	247	253	254	254	254	253	250	247	242
35/308	240	246	247	248	247	246	243	241	236
40/313	233	239	241	241	241	240	237	235	230
45/318	226	232	234	234	234	233	230	228	224
50/323	219	225	227	227	227	226	224	222	218
55/328	211	218	220	220	220	220	217	215	211
60/333	204	211	213	313	214	213	211	209	205

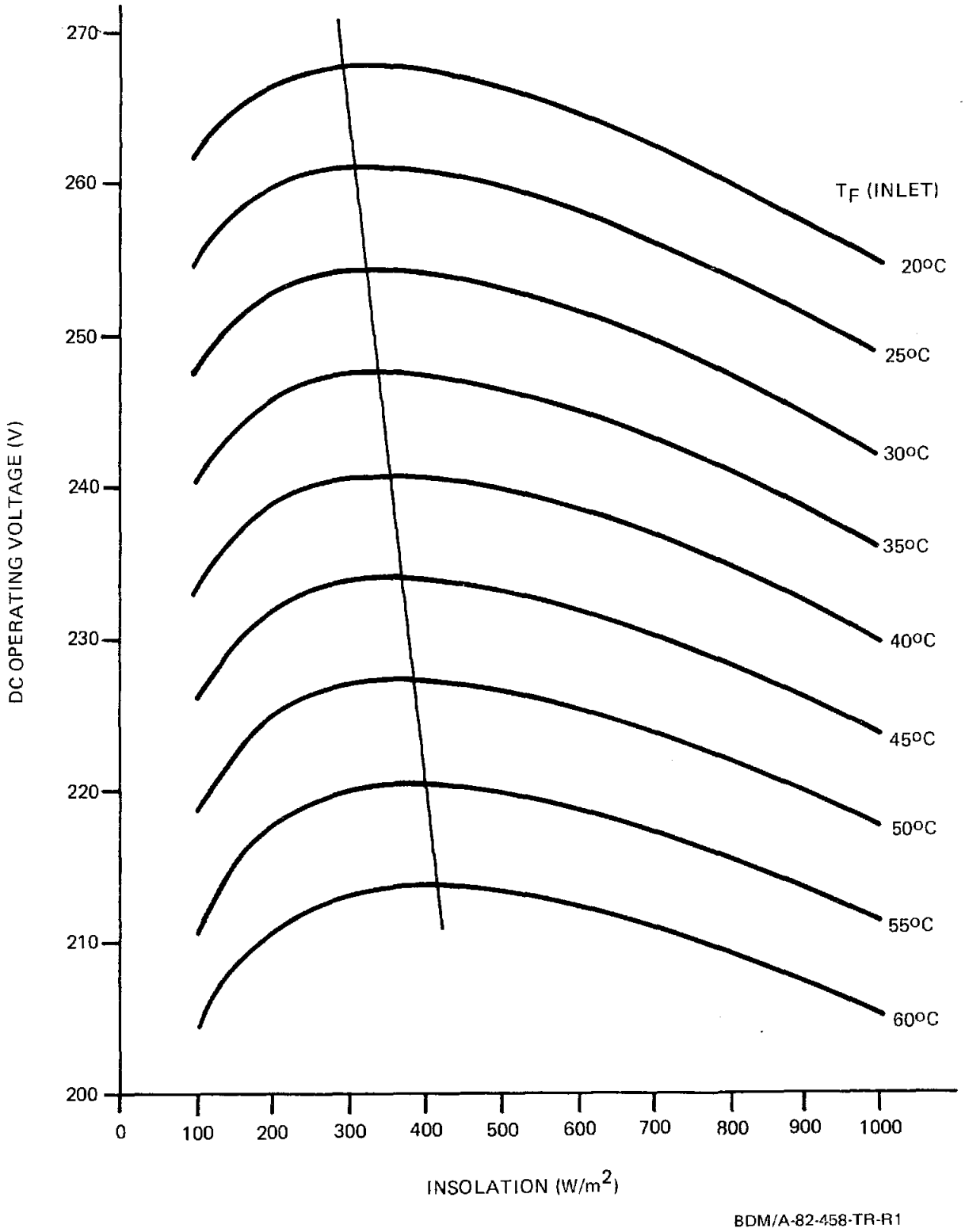

Figure III-4. DC Operating Voltage Variation for the Albuquerque Public School PV-T System

The lowest voltages are 204 and 205 V at 60°C inlet fluid temperature and 100 and 1000 W/m^2, respectively. The highest voltage is 268 V at 20°C inlet fluid temperature and about 300 to 350 W/m^2.

b. Determination of Subfield Size

Referring again to drawing E-2, the field is divided into two subfields with four rows per subfield. This specification resulted from a desire to locate summing junction boxes close to the rows to prevent excessive wire runs and to reduce the number of enclosures required and, consequently, the cost which would have resulted from using eight enclosures. Thus, it was decided to locate this junction box, titled M&S enclosure, near the negative termination post of the second row of each subfield. Thus, four positive and four negative wires are interconnected in this enclosure. The subfield could alternately have been specified as eight rows with the M&S enclosure located at the center of the fourth or fifth row. This would result in only one M&S enclosure per field instead of two, but would also result in longer DC cable runs within the field. Thus, the DC cables would have to be sized larger to prevent voltage and power losses in the cables and subsequent mismatch of row voltages.

After interconnections of positive and negative cables within each subfield M&S enclosure, one set of DC cables (one positive and one negative) is routed to the electrical control building from each subfield M&S enclosure. Details of the subfield enclosure are contained in the following section.

3. DC Switchgear and Wiring

There are two subfield M&S enclosures in the field. These enclosures serve as the focal point for interconnecting and routing of DC cables from the individual electrical rows to the inverter for transient protection of the arrays and DC cables and for maintenance and troubleshooting of the arrays. Drawing E-3 contains a schematic diagram of one subfield M&S enclosure. After the positive and negative cables from a particular row (or string) are routed into the enclosure, voltage and current monitoring resistors are connected between the cables. The 98-kΩ

and 2-kΩ resistors form a voltage divider so that the voltage at the test point will be only 2 percent of the row (string) voltage from ground. The 0.01 ohm current shunt resistor is used to measure the string current. Next, a 60-A, two-pole switch, defined in the drawing parts list, is provided to isolate the electrical string for maintenance. This maintenance switch is rated at 600 VDC per contact because the open-circuit voltage of the string could reach 324 V under worst case conditions. Therefore, a 250-V rated switch could not be used.

Blocking diodes and varistors are incorporated for row (string) protection. The varistors are provided for lightning protection to prevent high voltage excursions on either side of ground. The breakdown voltage of the varistors has been sized to exceed the maximum open-circuit voltage which can be generated by the string so that these varistors will not shunt current during normal operation. The blocking diodes prevent reverse power flow into the string in the event of either low-level transients from lightning or power conditioning which do not exceed the breakdown voltage of the varistors or from shorting failures within the string itself. The blocking diodes are required on both positive and negative lines because neither line is grounded. The blocking diode breakdown voltage has been sized at 1200 VDC to greatly exceed the normal varistor voltage of 420 V in the event that the latter rises significantly due to high-frequency transients. This transient increase is typically greater than 100 percent. Since the blocking diode represents a continuous power loss during normal operation, it has been rated to handle much more than the normal current of the string to reduce the forward voltage in operation and as a result the power loss as well.

Beyond the row protection and monitoring circuitry, the plus and minus conductors are connected with the corresponding conductors from the other three rows of the subfield. A 400-A, fused, two-pole subfield maintenance switch is connected to the output lines. It is mounted in its own enclosure external to the subfield M&S enclosure.

This switch is rated at 600 V per contact for the same reasons as are the row maintenance switches. The output conductors will consist

of direct burial cable and will be routed into the ground in conduit and then routed to the electrical control building 2 ft (0.61 m) underground without conduit.

Fuses have been included in the subfield maintenance switches. Fuses are used to prevent exceeding the current capability of the wiring in the case of shorts to ground. The individual rows, however, are protected from reverse power flow from other rows by blocking diodes. The direct burial cable from the subfield M&S enclosure to the electrical control building, however, requires protection against excessive current flow in the case of lightning or other transients.

The two sets of direct burial cables from subfield M&S enclosures are routed to two field maintenance switches in the electrical control building. The two-pole safety switches are rated at 600 VDC, 400 A. The conductors from the two switches are then connected separately to the inverter input terminals. Each of the cables entering the control building is protected from lightning surges by a varistor which is grounded to the switch case. The case is, in turn, grounded to the counterpoise system outside the building. The DC conductors are not grounded because the inverter operates with floating inputs. Each component is rated to exceed the maximum current and voltage which will be experienced. The maximum open-circuit voltage which will be experienced is 324 V; the maximum short-circuit current on each main conductor pair will be 216 A. Normal operating voltage and current will be 249 V and 203 A, respectively.

4. Inverters

a. Selection Rationale

A PV system inverter converts the array DC power into utility-compatible 60-Hz AC power and operates the PV power system in parallel with the public utility. The inverter must incorporate automatic start-up when power is available from the array and automatic shutdown at night and under fault conditions in the DC or AC lines. For the Albuquerque public school application, the inverter power requirements are dictated by the size of the PV field which has a rated power of

approximately 101 kW. There are several inverters which can be used in applications of about 100 kW. Among these are: 1) the Westinghouse 62.5-kW inverter; 2) the Delta Electronic Control Corporation (DECC) 75-kW inverter upgraded to 100 kW; and 3) a new line of DECC inverters which will be available in 4-kW increments up to 68 kW. The power requirements can be met by using either one DECC 100-kW inverter, two Westinghouse 62.5-kW inverters, or two DECC 48-kW inverters. For this application, the first option was chosen for the following reasons (although the other options could prove equally cost-effective if a detailed cost/performance analysis was accomplished):

(1) The initial cost of a single unit should be lower than the cost of two units since some of the internal components need not be duplicated.

(2) DECC has indicated that the 75-kW unit currently available could be modified to provide up to 150 kW in the same frame size.

(3) Only one circuit breaker is required on the output as opposed to three required with two parallel inverters. At the same time, no additional DC switchgear are required because both sets of cables can be connected directly to the inverter input.

(4) The DECC units have proven to be very reliable so that very little down-time due to the inverter is expected. In addition, the loss in inverter efficiency is very small (1 to 2 percent) for operating with one-half the PV field if the other half should be down for maintenance or repairs.

From the opposite viewpoint, the advantages of using two smaller inverters are:

(1) The PV field layout lends itself well to division into two separate fields.

(2) Using two inverters instead of one provides greater flexibility and increased reliability in that half the system can still be generating power when an inverter is shut down for maintenance or repair.

(3) More inverters are available in the smaller sizes.

(4) The greater initial cost may be offset by increased system efficiency and less down time.

b. Inverter Specifications

The inverter specifications are summarized in table III-4. The normal input voltage operating range of the inverter is 200 to 290 VDC with a maximum allowable voltage of 400 VDC. The rated array operating voltage with input fluid temperature of 25°C and a fluid temperature differential from inlet to outlet of 42°C will be 249 VDC. Under worst case conditions, the array open-circuit voltage should not exceed 324 VDC. The inverter output is 480-VAC, three-phase, four-wire, 60-Hz AC power. The inverter is rated at 100-kW maximum output power. However, the inverter will handle more than 10 percent over-power with the exact shutdown power determined by the actual input voltage. The AC output is automatically synchronized to the utility grid and provides array peak power tracking within 1 percent over the entire power range of 10 percent to 100 percent of rated power. The inverter will start up and shut down automatically in the presence or absence of sufficient solar power. The inverter will automatically disconnect from the utility grid when the grid exceeds inverter frequency and voltage tolerances. The inverter will also shut down for input over-voltage, inverter over-temperature, excessive reverse power flow, blown fuses, excessive output current (both peak and average), excessive rate-of-rise of current and excessive phase imbalance in the output current. Meters are provided on the control panel to display input and output operating parameters.

5. AC Power Distribution System

An AC one-line diagram for the Albuquerque public school PV-T system is shown in drawing E-4. The output of the inverter will provide the same type of power as the utility service, 480-VAC, three-phase, four-wire power. The inverter will display output voltage, current, power and VARs. A separate kW/hr meter will be installed, as indicated, in the AC switchgear in the control room to measure the cumulative energy of the PPS.

TABLE III-4. INVERTER SPECIFICATIONS

	SPECIFICATION
INPUT	
Maximum Voltage	400 VDC
Normal Operating Range, Loaded	200-290 VDC
OUTPUT	
Voltage	480 VAC 3 phase
Power (Max.)	100 kW
kvar	Automatically Minimized (p.f. > .99)
EFFICIENCY	
No load losses (tare)	2.1-2.7 kW
Efficiency at 50 kW	92%
Efficiency at 100 kW	93%
Output Current Distortion, Full Load	3 % THD
Frequency Synchronization Range	60±2 Hz
PHYSICAL CONFIGURATION	
Dimensions	26"H x 84"W x 36"D
ENVIRONMENTAL	
Temperature	-10°C to 45°C
Humidity	0-95%
OUTPUTS TO DATA ACQUISITION SYSTEM	Standard Level Analog and Digital Signals

The AC output of the inverter is interconnected through a 150-A utility service rated, 480-VAC circuit breaker in the PPS AC switchgear enclosure. The circuit breaker is provided for safety, fault isolation, and disconnection for maintenance. The AC output of the PPS is also protected by a standard AC lightning surge arrestor.

At the plant utility service entrance, the utility line contains two kWHr meters back-to-back to measure the power flow to and from the utility. Since standard utility meters cannot run backwards, two meters are necessary to determine the utility sell-back discount.

Inside the plant, both AC sources are fed to the main plant AC circuit breaker panelboard for distribution through transformers as needed to satisfy all plant power requirements. A 480-VAC output is fed back to the PPS electrical control building to satisfy the AC power requirements of the PPS. The AC input to the electrical control building is metered to determine the PPS parasitic power requirements. By combining the PPS output with the utility service (add or subtract as appropriate) and subtracting the PPS parasitic power, the power supplied to the school loads can be determined.

The AC power supplied to operate the PPS is stepped down to 120/220 V through a 50-kVA transformer located near the building and is fed to the main AC panelboard in the electrical control building. This line is also protected by an AC surge arrestor. The AC panelboard distributes 120/220-VAC power to the mechanical skid and to the PV-T field trackers.

The AC panelboard in the electrical control building also routes 120 VAC for control buiding electrical service and for the controller and hazard station.

An interruptible power supply (IPS) consisting of a diesel generator set provides power for emergency stowing of the arrays in the event of a utility outage. An uninterruptible power supply (UPS) consisting of a battery bank and an inverter provides a source of constant power to the master tracking controller to prevent loss of computer volatile memory.

The control and auxiliary power system will be discussed in more detail in the following sections.

6. Control Systems

The control systems design considerations for the Albuquerque public school PPS are essentially the same as for the Dixon PPS. However, emergency conditions which require stowing the whole field would probably be handled differently. Since the APS system contains only eight array tracking controllers in the field, all the controllers would be signaled simultaneously to initiate stowing rather than sequencing them in groups. The number of motors activated simultaneously and, therefore, the power required would still be less than in the Dixon design.

7. Auxiliary Power Systems

The auxiliary power system design for the Albuquerque public school PPS is almost the same as that for the Dixon PPS. Both an IPS and UPS are required. The UPS is the same as that used in the Dixon PPS but the IPS has been down-sized to 45 kW instead of the 100 kW used in the Dixon PPS because of the lower power requirements in the public school system. Unlike the Dixon system in which only the field transformers were powered by the IPS, the school IPS powers all of the pumps and electrical equipment as well as the eight tracking motors in the field. This was done to simplify the control system and AC power distribution design since the electrical equipment and pumps consume much less power than in the Dixon system. The auxiliary power systems are defined on the AC one-line diagram, drawing E-4, and in the electrical components list, table III-2.

8. Electrical Control Building Design

a. Building Construction

The electrical power conditioning and control equipment is housed in the Electrical Control Building (ECB) shown in drawing E-5. Since the PV-T system is designed to operate essentially unattended, with only occassional personnel intervention, the ECB is also designed for routine operation and is not designed for use as a maintenance personnel

office. Therefore, the building contains no desk, a minimum of windows and provides only minimal air conditioning. The ECB is located to the north of the PV-T field near the east border because the DC power collection is along the east side of the field.

The main building is 16 ft by 16 ft (4.88 by 4.88 m) with 9-ft (2.74 m) eave height as shown in the elevations on drawing E-5. The building construction is preformed metal panel, the same as for the Dixon PV-T system. The smaller building is 10 ft by 12 ft (3 x 3.66 m) with 7-ft (2.1 m) eave height and is used to house the deisel generator, 50-gallon (0.189 m^3) fuel tank and engine start batteries. It is of the same construction as the main building and is similar to the generator building in the Dixon PV-T system.

The main building has double doors in the center of the south wall where winter snow will melt more quickly. Each of these metal doors is 3 ft wide by 7 ft high (0.91 x 2.1 m). The building has two 4 ft high by 3 ft wide (1.22 x 0.91 m) windows. One is located in the south wall to the east of the double doors and affords a view of the PV-T field. The other is at the north end of the west wall and affords a view of the mechanical skid.

The air conditioning for the building is predicated on the inverter operating temperature limits of -10°C to 45°C. Since Albuquerque temperatures seldom drop below -10°C and the inverter will generate some heat itself, insulating the walls and roof should be sufficient to keep the inside temperature above -10°C so that no additional heating will be required. In the summer, however, outside temperatures could reach 40°C. Since insolation is high in Albuquerque and the inverter also generates some heat, an evaporative air conditioner is provided to keep the temperature below 45°C. The cooler would be set to turn on when the room temperature reaches 30°C. The location at the north end of the east wall will ensure that it is shaded in the afternoon when the temperatures are highest. A small exhaust fan is also provided in the south wall at the west end for active ventilation when the room temperature is above 10 to 15°C but below 30°C.

The foundation requirements are much simpler than for the Dixon PV-T system. No special concrete pads are required for the inverter; therefore, a concrete building slab suitable for use in commercial electric service rooms is sufficient. Concrete details are included in drawing E-5.

The DC and AC cable runs are routed into and out of the building in conduit through the metal walls near the ground. Outside the building, the conduit ends 2 ft (0.61 m) below grade for direct burial cable runs to and from the field and the school.

b. Equipment Arrangement

Referring to drawing E-5, the DC and AC switchgear, the inverter, the master controller and the UPS system are all located in the main building. Only the engine generator, fuel tank and engine start batteries are located in the auxiliary building. The DC cables enter through the west wall at the south end into separate safety switches. The safety switch enclosures are each 39-3/4 in high by 25-1/4 in wide by 12 in deep (1.01 by 0.64 by 0.30 m) and are mounted along the wall. The cables from the safety switches are routed north on the ground in conduit and enter the inverter from the left (or back) side. The inverter is spaced 36 in (0.91 m) from the wall to permit access behind it. The inverter is 7 ft wide by 3 ft deep by 76 in high (2.13 by 0.91 m by 1.93 m).

The AC cables are routed in conduit on the ground to the west wall and then north to the north wall to the PPS circuit breaker panel. This panel is 18-3/4 in high by 12-1/4 in wide by 5-3/8 in (0.47 by 0.31 by 0.14 m) deep. The AC cables exit and enter through the north wall. The AC service transformer for the building is located outside to the north of the building. The AC service panelboard is located inside the north wall near the center.

The master tracking controller and hazard enclosure are housed in a single cabinet approximately 20 in wide by 30 in (0.51 by 0.76 m) deep near the south half of the east wall. The UPS cabinet is 61 in high by 24 in wide by 30 in (0.61 by 0.76 m) deep and located

north of the tracking controller unit 25 in (0.635 m) from the east wall to permit access from the rear. The UPS is located along the east portion of the north wall.

9. Protection and Grounding

The safety and protection design for the Albuquerque public school PV-T system incorporates the same principles as the Dixon PV-T system; therefore, the descriptions will not be repeated here. The only differences are in the ground counterpoise system shown in drawing E-6 because of the differences in the field layout and the location of the mechanical skid and electrical control building.

In the Dixon PV-T field layout, each row was divided into five array segments of 106 ft (32.31 m) with spaces between the segments. The grounding conductors were routed north-south between these segments. In the Albuquerque public school field layout, however, each row has nine arrays equally spaced resulting in a row length of 190 ft (57.91 m). Since it is desirable to limit the ground conductor lengths to less than 120 ft (36.65 m), a ground conductor is routed north-south under the center array of each row in addition to those at the east and west ends as shown in drawing E-6. The electrical control building and the mechanical skid are located along the east border north of the field in drawing E-6 instead of to the north center as in the Dixon design. Therefore, the building and skid counterpoise connects to the east side field conductor instead of the center conductor. Other than this, the counterpoise and grounding are the same.

C. DETAILED MECHANICAL SYSTEM DESIGN

1. Constraints for Mechanical Design

The PV-T system designed for the Albuquerque, New Mexico school is shown on the P&ID drawing M-3, and the P&ID specifications are given in table III-5. The design methodology for the system resulted from

TABLE III-5. ALBUQUERQUE SCHOOL
P&ID SPECIFICATIONS

WATER (LOAD) SIDE

SYMBOL	DESCRIPTION	SIZE	CONNECTION	MFG. & PART NO.
BV-11	Ball Valve	2"	150#	Worcester 51-44-150
BV-14, 16	Ball Valve	2½"	150#	Worcester 51-44-150
CK-2, 4, 5, 6	Check Valve	2½"	150#	Crane 147
CK-3	Check Valve	2"	150#	Crane 147
CP-2	Circulation Pump	1½"x2"	150#	Worthington 1½ LLR-7, 6.25" Impeller, 3550 rpm
CP-3	Circulation Pump	1½"x2"	150#	Worthington 1½ LLR-7, 6.25" Impeller, 3550 rpm
FRG-1	Flow Regulator	2½"	150#	Taylor Tool #TF-C-2 Set at 57.3 gpm
FRG-2	Flow Regulator	2"	150#	Taylor Tool #TF-C-2 Set at 35.8 gpm
MV-9, 3	Motorized Valve	2"	150#	Worcester 51-44-150 with 2075X Actuator
MV-5, 6, 7	Motorized Valve	2½"	150#	Worcester 51-44-150 with 3075X Actuator
PRG-1	Pressure Regulator	2½"	150#	Jordan 2½" Sliding Gate Pressure Regulator, 12-25 psi Set to 15 psi
ST-3	Strainer	2½"	150#	Leslie #7201
ST-4	Strainer	2"	150#	Leslie #7201
SWS-1	Hot Water pre-heater/ storage tank	1500 gal		PVI Model G-1500-A-T, 1500 gal Storage, ASME Code Steel Construction for 160 psi Working Pressure, GLASHIELD Triple Coated Interior Surfaces, Fiberglass Insulated

TABLE III-5. ALBUQUERQUE SCHOOL
P&ID SPECIFICATIONS (Continued)

WATER (LOAD) SIDE

SYMBOL	DESCRIPTION	SIZE	CONNECTION	MFG. & PART NO.
TT-3, 4, 5	Temperature Transmitter	½"	Threaded	Fisher PM 503 Temperature Transmitter Thermocouple Type J
VB-1	Vacuum Breaker	3/4"	NPT	Gast, #AA 308, set press at 2 psi

TABLE III-5. ALBUQUERQUE SCHOOL
P&ID SPECIFICATIONS (Continued)

GLYCOL (FIELD) SIDE

SYMBOL	DESCRIPTION	SIZE	CONNECTION	MFG. & PART NO.
AE-1	Air Eliminator	2½"	NPT	Amtrol #447
BV-1A through H	Ball Valve	1"	150#	Worcester 51-44-150
BV-3, 5, 7	Ball Valve	3"	150#	Worcester 51-44-150
BV-8, 9, 10, 4, 6	Ball Valve	2"	150#	Worcester 51-44-150
CP-1	Circulation Pump	1½"x3"	150#	Worthington 1-1/2 LLR-10, 1760 rpm, 9" Impeller
CT-1	Cooling Tower	4"	150#	Baltimore Aircoil VXI18 - 1X
ET-1	Expansion Tank	2"	150#	Ace Buehler X 18-1.5, 30 gal 18" dia X 30" long, galvanized lining
FS-1A through H	Flow switch	1"	NPT	Peeco, Type NT, Flow Set at 4 gpm
GV-1	Globe Valve	2"	150#	Crane #143
GV-2	Globe Valve	2½"	150#	Crane #143
HX-1	Heat Exchanger	2"	150#	Tranter, #UX-216-UP-33, 304SS Plates, NBR Gasket
MV-1, 2	Motorized Valves	3"	150#	Worcester 51-44-150 with 3075X Actuator
PRV-1A through H	Pressure Relief Valve	½"	NPT	Dresser Industries Consolidated #1488, Press Set at 100 psig

TABLE III-5. ALBUQUERQUE SCHOOL
P&ID SPECIFICATIONS (Concluded)

GLYCOL (FIELD) SIDE

SYMBOL	DESCRIPTION	SIZE	CONNECTION	MFG. & PART NO.
ST-1	Strainer	2½"	150#	Leslie #7201
ST-2	Strainer	2"	150#	Leslie #7201
TS-2 A through H	Temperature Switch	½"	NPT	Transamerican Delaval Barksdale MLIH-H352-W, Temp Set at 225°F
TS-1	Temperature Switch	½"	NPT	Transamerican Delaval Barksdale MLIH-H352-W Temp Set at 210°F
V-1A through H	Venturi Pressure Meter	1"	Screwed	Gerand, VS-1-406

several fixed constraints based on the load requirements and system simulations. These include the following:

(1) E-Systems line focus Fresnel collectors
(2) Row to row spacing - two apertures
(3) Total arrays - 72
(4) Arrays per delta - T string - 9
(5) Total flow rate collector side - 40 gpm (2.45 kg/sec or 2.5×10^{-3} m^3/sec)
(6) Maximum collector side operational temperature - 210°F (98.9°C)
(7) Load side flow rate - 56.9 gpm average (3.51 kg/sec or 3.4×10^{-3} m^3/sec)
(8) Load side required temperature - -215°F (102°C) minimum
(9) Load side makeup temperature - variable
(10) Thermal storage - none

2. Field Layout

The solar collector field layout shown in drawing M-1 was chosen to minimize the length of the manifold while remaining within the pressure and temperature limitations of the collectors. The field is fed from one end with cold fluid and hot fluid collected at the opposite end. The mechanical and electrical skid are located at the collection, or hot, end of the field. This minimizes the length of the hot return line and decreases the amount of heat loss from the manifold. Since the manifold piping is above ground, ramps over the piping will be required to allow easy access to the collectors for maintenance and cleaning. Ideally, the plant and equipment skids will be positioned to the north of the field to prevent shading of the collectors.

3. Manifold

The manifold supply and return lines are insulated and above ground supported by pipe guides located every 13 ft (3.96 m). Rigid calcium silicate insulation is used at each support to prevent heat loss through the support, and fiberglass insulation on the remainder of the manifold. Each collector is connected to the manifold with a U-bend in

the pipe run. This U-bend serves two purposes: 1) provides a "thermal trap" that prevents hot fluid in the manifold from thermal syphoning to the colder fluid in the collectors when not in operation, and 2) provides flexibility to compensate for axial thermal expansion of the manifold.

The design flow rate is 5 gpm (3.2×10^{-4} m^3/sec) through each delta-T string and 40 gpm (2.45 kg/sec or 2.5×10^3 m^3/sec) through the manifold. The pressure drop across each row is given by the empirical relation for E-Systems collectors (equation III-1) with all terms in English units. For relations with terms in SI units, see volume III.

$$\Delta P = 8.58 \times 10^{-3} G^{1.8} \mu^{0.2} \rho^{0.8} N_c \qquad \text{(Eq. III-1)}$$

Where:

ΔP = pressure drop, psi
G = flow rate, gpm
μ = fluid viscosity, Cp
ρ = fluid density, lb/ft^3
N_c = number of collectors per row

For 40-percent ethylene glycol/water and an average array temperature of 182^oF (90^oC) (an annual average determined in the SOLCEL simulations), the viscosity is 0.7 Cp (7×10^{-4} Pa·s) and the density is 63.15 lb/ft^3 (1012 kg/m^3). For nine collectors/row the pressure drop is 36 psi (0.25mPa).

In an edge feed system the manifold length is given by equation III-2:

$$L_m = \text{(row spacing) (\# of rows -1) *2} \qquad \text{(Eq. III-2)}$$
$$L_m = \text{(20 ft) (8-1) (2) = 280 ft (85.4 m)}$$

The allowable average pressure drop per foot of manifold pipe is determined from equation IV-80, volume II, to be 0.032 psi/ft (724 Pa/m). Referring to figure IV-33 of volume II shows that the manifold piping should be 1-1/2 in (3.81 cm) in diameter for the entire field. To

maintain a normal design pressure drop of 1 to 5 ft (0.3 to 1.52 m) of head per 100 ft (30.48 m) of pipe, the feeder line to the field should be 2 in (5.08 cm) in diameter for the constant flow rate of 40 gpm (2.5×10^{-3} m^3/sec). This assumes carbon steel pipe is used throughout.

4. Thermal String (Delta-T String)

There are obvious advantages to having long delta-T strings (i.e., less manifold piping, less control and maintenance hardware, less drive pylons, etc.). However, these must be traded-off against disadvantages such as excess pressure drop and temperature rise across the rows. The design must also consider the current, voltage and voltage mismatch, and wire sizes for the PV portion of the system. These factors have been discussed in the previous section. Based on these trade-offs a row length of nine arrays/row and a flow rate of 5 gpm (3.2×10^{-4} m^3/sec) per row were chosen.

5. Expansion Tank (ET-1)

The collector loop requires an expansion tank to accommodate the volumetric thermal expansion of the ethylene glycol/water mixture when it is heated to a maximum operating temperature of 210°F (98.9°C). Otherwise, the system would build up a high pressure causing leaks, failures, and possibly injuries. In order to size the expansion tank (ET-1), a rough idea of the volume of the system is required. Consider the sketch in figure III-5 and table III-6.

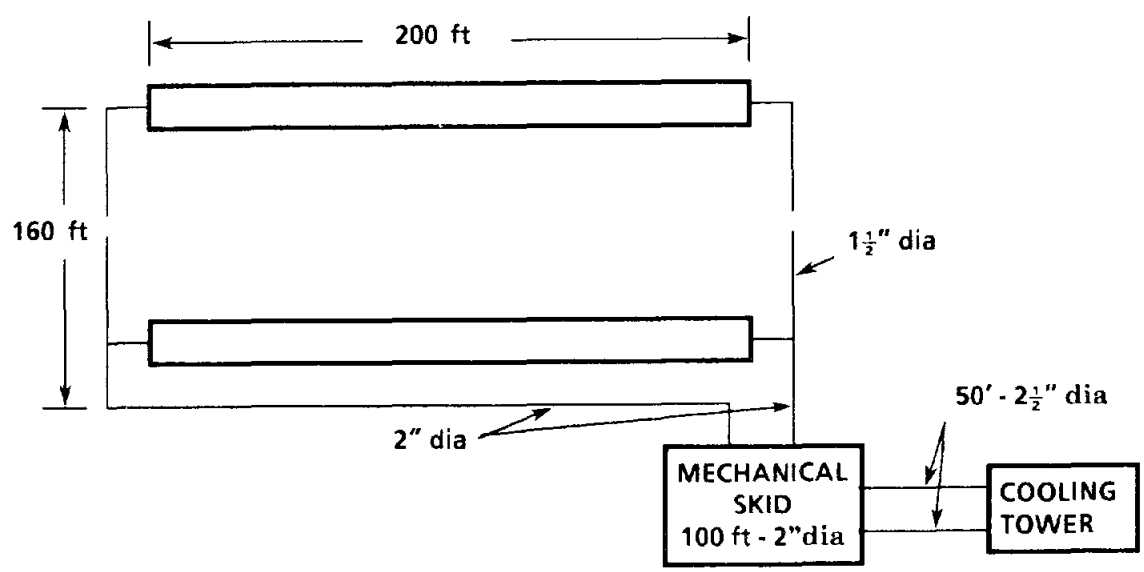

BDM/A-82-458-TR-R1

Figure III-5. Piping Schematic

TABLE III-6. FLUID VOLUME INVENTORY

PIPE	ft/RUN	DIAM	gal/ft	# OF RUNS	gals
Collectors	73	3/4	0.023	72	121
Manifold	160	1-1/2	0.106	2	34
Collector/Skid	220	2	0.174	1	70
Skid	100	2-1/2	0.249	1	25
Skid/CT	50	2-1/2	0.249	2	25
					275 gal (1.04 m^3)

For a 40-percent ethylene glycol/water solution, the volumetric thermal expansion is:

$$\frac{P_{T = 68°F}}{P_{T = 212°F}} = \frac{1.051}{1.000} = 1.051$$

Then:

$$(275 \text{ gal})\ (1.051) = \begin{array}{r} 289 \\ -275 \\ \hline 14 \end{array} \text{ gallons } (0.053\ m^3)$$

Then the system will increase in volume by 14 gallons (0.053 m^3) when it is operating between 68°F (20°C) and 212°F (101°C). The ET-1 will be sized such that when the system is cold it will one-fourth full, and three-fourths full when the system is hot. Thus, the tank size should be 28 gallons (0.106 m^3). An Ace-Buehler tank model X-18-15 is chosen. This tank is 18 in (0.46 m) in diameter, 30 in (0.76 m) long with a 30-gallon (0.113 m^3) capacity. The inside surface should be galvanized. A pressure relief valve, set for 5 psid (34.5 kPa), should be used to prevent excess pressure buildup in the tank, and a vacuum breaker set to 2 psid (13.8 kPa) to prevent tank collapse during system cooldown. The tank should be elevated above the pump as high as is practical to reduce the possibility of cavitation at the pump and to allow feeding through the pump during system filling procedures.

6. Cooling Tower

After having a basic idea of the system configuration, SOLCEL runs were made and the maximum heat rate from the collector is 1.2 x 10^6Btu/hr (351.6 kW) assuming the system is to be run even if the thermal side is shut down (i.e., for maintenance or during the summer), then the cooling tower must be sized to reject 1.2 x 10^6 Btu/hr (351.6 kW) to maintain the collector output below 210°F (98.9°C). The ΔT across the cooling tower is:

$$\Delta T = \frac{Q}{\dot{m}_a \; C_p} = \frac{1.2 \times 10^6 \text{ Btu/hr}}{(4.8 \text{ Btu/sec°F})(3600 \text{ sec/hr})} = 69.4°F \; (38.6°C)$$

Then the maximum collector inlet temperature is:

$$T_{a,i} = 210 - 69.4 = 140.6°F \simeq 140°F \; (60°C)$$

The approach temperature, defined as the leaving fluid temperature minus the design wet bulb temperature (66°F or 18.9°C) typical for Albuquerque, New Mexico), is:

$$T_{app} = 140 - 66 = 74°F \; (41.1°C)$$

In order to maintain the inlet to the CT at 180°F (89.5°C) or less when the collector reaches 210°F (98.8°C), the flow rate through the CT must be increased as shown in figure III-6.

To find $\dot{m}_2$, an energy and mass balance is performed at node A, assuming constant specific heat throughout the system.

$$\dot{m}_1 \; (140°F) + (40) \; (210) = \dot{m}_2 \; (180)$$

$$\dot{m}_1 + 40 = \dot{m}_2$$

$$\dot{m}_1 = 30 \text{ gpm } (1.89 \times 10^{-3} \text{ m}^3/\text{sec})$$

$$\dot{m}_2 = 70 \text{ gpm } (4.42 \times 10^{-3} \text{ m}^3/\text{sec})$$

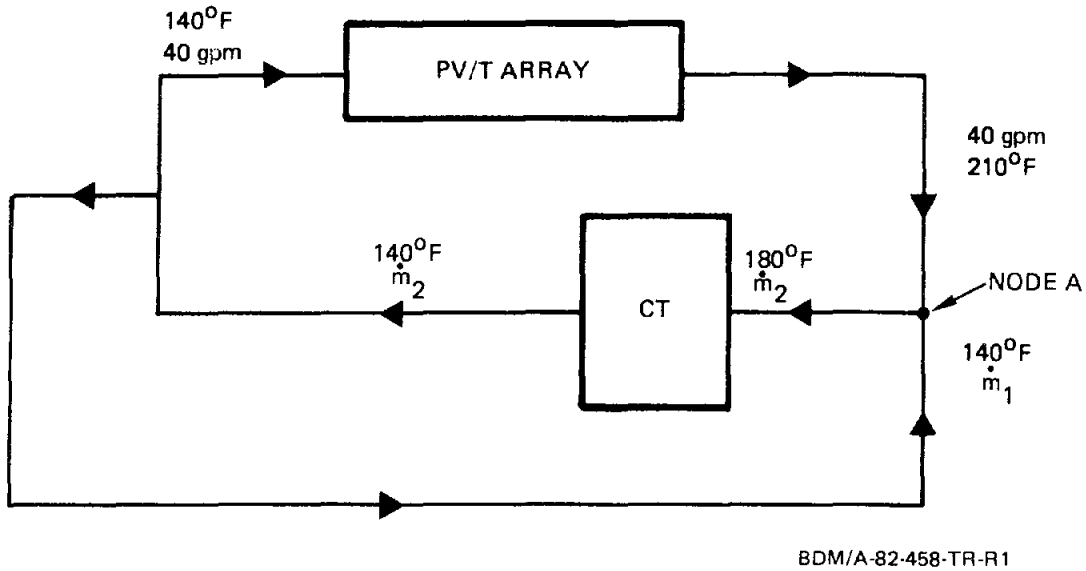

Figure III-6. Cooling Tower Conditions

Then the following parameters apply:

(1) Range = 180-140 = 40°F (22°C)

(2) Approach = 74°F (22.4°C)

(3) Design wet bulb = 66°F (18.9°C)

(4) Design flow rate = 70 gpm (4.42×10^{-3} m^3/sec)

(5) HTF = 40 percent ethylene glycol/water

The BAC # VXI 18-1X is recommended by the manufacturer. The pressure drop is 0.4 psi (2760 Pa) at 80 gpm (5.05×10^{-3} m^3/sec), the operating weight is 2800 lbs (1270 kg), the spray pump flow rate is 75 gpm (4.7×10^{-3} m^3/sec) with a 1/2 hp (373 W) motor, and the fan delivers 10,500 CFM (5 m^3/sec) with a 5 hp (3.73 kW) motor.

7. Heat Exchanger (HX-1)

The HX is required to separate the potable water on the load side from the non-potable ethylene glycol on the collector side. Code requires that a double wall HX be used. However, a plate and frame HX serves the same purpose (see figure II-14). If a leak in the gaskets should occur, with a plate HX, neither fluid would mix with each other

but would drain to the environment. This prevents cross-contamination of the fluids. Plate HX also has a more effective method of heat transfer due to the high turbulence allowing approach temperatures to be less than $5^{o}F$ ($2.8^{o}C$). The HX is sized to transfer the maximum energy possible from the collectors to the load while maintaining the collector outlet temperature at the maximum of $210^{o}F$ ($98.9^{o}C$).

The peak useful heat output of the array is 437.1 W/m^2 at an insolation level of 1024 W/m^2. This converts to 1.2×10^6 Btu/hr (351.6 kW).

The array side flow rate is 40 gpm (2.5×10^{-3} m^3/sec), and the capacity rate is $W_a = (\dot{m}c_p)a = 4.8$ Btu/sec ^{o}F (9.1 kW/^{o}C) for an average temperature of $182^{o}F$ ($90^{o}C$).

The load side flow rate varies depending on the load. The load consists of domestic hot water only (63.3 percent of the time) with a flow rate of 35.8 gpm (2.26×10^{-3} m^3/sec), and a combined DHW and space heat (36.7 percent of the time) with a flow rate of 93.1 gpm (5.87×10^{-3} m^3/sec). The annual average load return temperature for the DHW only load is $157^{o}F$ ($67^{o}C$) and is $171^{o}F$ ($77.9^{o}C$) when both DHW and space heat loads are functioning. Thus, the annual average flow rate is 56.9 gpm (3.6×10^{-3} m^3/sec) and the average load return temperature is $162.1^{o}F$ ($73^{o}C$). The load side average capacity rate is 7.722 Btu/sec ^{o}F (14.7 kW/^{o}C).

The heat exchanger is sized to transfer the maximum amount of energy from the array side under average flow conditions on the load side in order to minimize operation of the cooling tower. Using the conditions shown in figure III-7, the heat exchanger effectiveness is:

$$\varepsilon = \frac{W_a\ (T_{h,i} - T_{h,o})}{W_{min}\ (T_{h,i} - T_{c,i})} = \frac{210-164}{210-162} = 0.9583$$

The outlet temperature on the load side is found from:

$$\varepsilon = 0.9583 = \frac{W_L(T_{c,o} - T_{c,i})}{W_{min}\ (T_{h,i} - T_{c,i})} = \frac{7.722\ (T_{c,o} - 162)}{4.8\ (210 - 162)}$$

so that $T_{c,o}$ = 191°F (90.5°C). The average heat transferred to the load is:

$$Q_{hx} = Wa(T_{h,i} - T_{h,o}) = (4.8)(3000)(210-164) = 7.95 \times 10^5 \text{Btu/hr} \ (233 \text{ kW}$$

The number of transfer units is:

$$NTU = \frac{1}{1 - \frac{4.8}{7.722}} \ln\left[\frac{1-(0.9583)(\frac{4.8}{7.722})}{1 - 0.9583}\right] = 6.00$$

Assuming an overall heat transfer coefficient of 800 Btu/hr ft^2°F (4542W/m^2°C), the area is:

$$A = \frac{(W_{min})NTU}{U} = \frac{(4.8)(3600)(6.00)}{800} = 130 \text{ ft}^2 (12.1 \text{ m}^2)$$

Using Tranters model UX-216 plate which is 4 ft^2 (0.37 m^2), the total number of plates is 33 plates with 16 parallel flow channels in a single pass configuration.

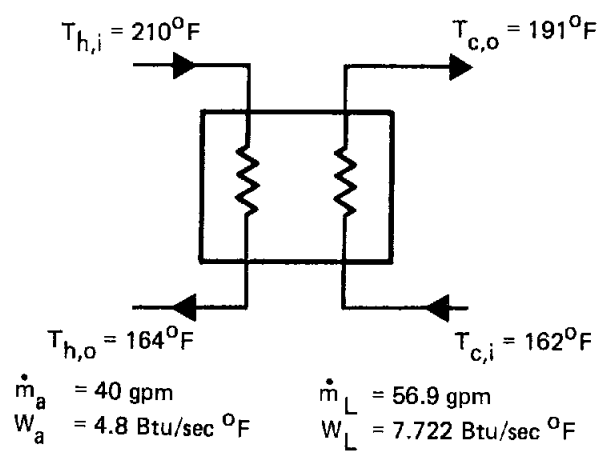

BDM/A-82-458-TR-R1

Figure III-7. Heat Exchanger Design Conditions

8. Load Side Pump Sizing

The basic flow system on the load side is shown in figure III-8. A distance of 100 ft (3.05 m) is assumed between the mechanical skid and existing boiler and DHW system. The pressure regulator is sized to deliver the indicated flow rate at 15 psig (0.21 MPa) with an initial pressure of about 30 psig (0.31 MPa) produced by the existing pump. The manufacturer (Taylor Tool Co.) recommends a conservative pressure drop across the flow control valves of 100 psi (0.69 MPa) regardless of flow rate. Both pumps operate into node A producing the same pressure head at that point. Pump CP-3 pumps into the boiler held at 30 psig (0.31 MPa) and must develop 30 psig (0.31 MPa) head at point D after the friction losses between D and the pump outlet. Pump CP-2 must also develop 30 psig (0.31 MPa) of head at point C plus friction losses; however, it recovers this static head at the pump inlet.

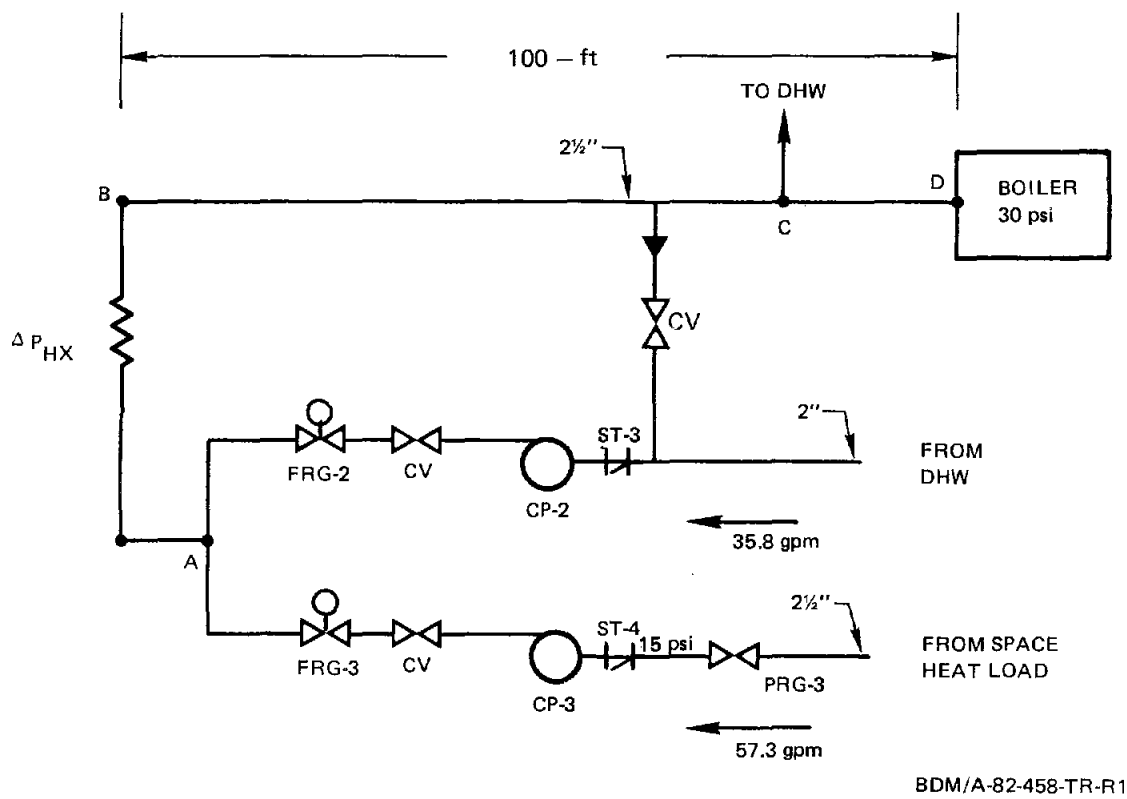

Figure III-8. Flow System for Pump Sizing and Head Loss Calculation

The dynamic pressure drop through the piping and components depends on fluid viscosity and density. Since the average fluid outlet temperature is 202°F (94.2°C), then for a heat exchanger effectiveness of 0.9583:

$$\varepsilon = 0.9583 = \frac{W_L(T_{c,o} - T_{c,i})}{W_{min}(T_{h,i} - T_{c,i})} = \frac{7.722\ (T_{c,o} - 162)}{4.8\ (202-162)}$$

$$T_{c,o}\ (avg) = 186°F\ (85.6°C)$$

$$T_{avg} = 174°F\ (78.9°C)$$

Thus, at an average temperature of 174°F (78.9°C):

viscosity = μ = 0.372 Cp (3.27×10^{-4} Pa·s)
density = ρ = 60.7 lb/ft^3 (972 kg/m^3)
$\alpha = 144/\rho = 2.37$

The pressure drop through the heat exchanger in psi is given by:

$$\Delta P_{hx} = 9.47 \times 10^{-3}\ (G/N_c)^{1.8}\ \mu^{0.2}\ \rho^{0.8}\ N_p$$

For a 130 ft^2 (12.1 m^2) heat exchanger with 33 plates and 16 flow channels having one pass each, and two 90° elbows, the pressure drop is:

$$\Delta P_{hx} = 1.47 \times 10^{-3}\ (G)^{1.8}$$

The flow from node B to the boiler varies from 35.8 gpm (2.3×10^{-3} m^3/sec) to 91.3 gpm (5.8×10^{-3} m^3/sec). For a 2-1/2-in (6.35 cm) pipe 100 ft (30.48 m) long the pressure drop is:

$$\Delta P_{B-C} = \frac{G^{1.8}\ \mu^{0.2}\ \rho^{0.8}\ L}{4.7 \times 10^4\ (D)^{4.8}} = 6.08 \times 10^{-4}\ G^{1.8}$$

Thus, the pressure drop from node A to the boiler (line 1) is:

$$\Delta P_1 = 2.08 \times 10^{-3} G^{1.8}$$

The pressure drop through the 2-in (5.08 cm) line containing CP-2 (line 2) from point C to point A, and the drop in the 2-1/2-in (6.35 cm) line from the outlet of the PRG to node A, is due to the components in table III-7.

TABLE III-7. MINOR HEAD LOSS COMPONENTS AND EQUIVALENT LENGTHS

LINE #2 (2" DIA)		LINE #3 (2 1/2" DIA)	
Pump inlet/outlet:	1 ft	Pump inlet/outlet:	1 ft
Strainer:	28 ft	Strainer:	35.3 ft
Check valve:	22.5 ft	Check valve:	28 ft
90° bend:	5 ft	90° bend:	6 ft
Side outlet T:	11 ft	Side outlet T:	13 ft
Hot water heat exchanger:	12 psi		

The pressure drops in the pump lines are obtained from the relation:

$$\Delta P = \frac{G^{1.8} \mu^{0.2} \rho^{0.8} L_{eq}}{(4.7 \times 10^4) (D)^{4.8}}$$

Thus:

$$\Delta P_2 = 1.33 \times 10^{-3} G_1^{1.8} + 100$$

$$\Delta P_3 = 4.77 \times 10^{-4} G_2^{1.8} + 100$$

In the following sections the system pressure drop is calculated for each combination of pump operation.

a. Pump CP-2

The flow through CP-2 is 35.8 gpm (2.3×10^{-3} m^3/sec) so the pressure losses are:

$$\Delta P_1 = 2.08 \times 10^{-3} (35.8)^{1.8} = 1.3$$

$$\Delta P_2 = 1.33 \times 10^{-3} (35.8)^{1.8} + 100 = 100.8$$

$$\Delta P_{TOTAL} = 102.1 \text{ psi} = 242 \text{ ft } (73.8 \text{ m})$$

b. Pump CP-3

The flow through CP-3 is 57.3 gpm so the pressure losses are:

$$\Delta P_1 = 2.08 \times 10^{-3} (57.3)^{1.8} = 3$$

$$\Delta P_3 = 4.77 \times 10^{-4} (57.3)^{1.8} + 85 = 85.7$$

$$\Delta P_{TOTAL} = 88.7 \text{ psi} + 30 = 281 \text{ ft } (85.7 \text{ m})$$

c. Pumps CP-2 and CP-3

The combined flow of these pumps is 93.1 gpm (5.9×10^{-3} m^3/sec). The pressure drops in lines 2 and 3 must be equal and are controlled by the flow control valves. The drop in line 3 is 85.7 psi (0.59 MPa) so the pressure losses are:

$$\Delta P_1 = (2.08 \times 10^{-3}) (93.1)^{1.8} = 7.3$$

$$\Delta P_2 = \Delta P_3 = 85.7$$

$$\Delta P_{TOT} = 93 \text{ psi} + 30 = 291 \text{ ft } (88.7 \text{ m})$$

These pressure drops for various pump combinations are summarized in table III-8. The pressure drops are also plotted in figure III-9 along with the characteristic pump curves for the pumps selected for this application.

TABLE III-8. PUMP FLOW AND HEAD REQUIREMENTS

PUMP	FLOW (gpm)	DEVELOPED HEAD (ft)	POINT IN FIGURE III-9
CP-2	35.8	242	A
CP-3	57.3	281	B
CP-2 + CP-3	93.1	291	C

9. Circulation Pump (CP-1)

In order to size the circulation pump for the PV-T field, the total system head must be determined. A simplified flow resistance network is shown in figure III-10. The resistance of the collector field is a combination of the resistance of the collectors plus the resistance of the supply and return manifolds from the mechanical skid to the field. This resistance is found by referring to figure III-11 where points "a" and "d" are at the mechanical skid.

The pressure drop from point "a" to "b" is given in psi by:

$$\Delta P_{ab} = \frac{(G_f)^{1.8} \mu^{0.2} \rho^{0.8} L}{4.7 \times 10^4 D^{4.8}} \qquad \text{(Eq. III-3)}$$

And the resistance is:

$$R_{ab} = \frac{\Delta P_{ab}}{(G_f)^{1.8}}$$

Where:

$D = 2$ in (5.08 cm)

$L = L_{ab} = 220 \text{ ft} + L_{eq}$ $(67.1 \text{ m} + L_{eq})$

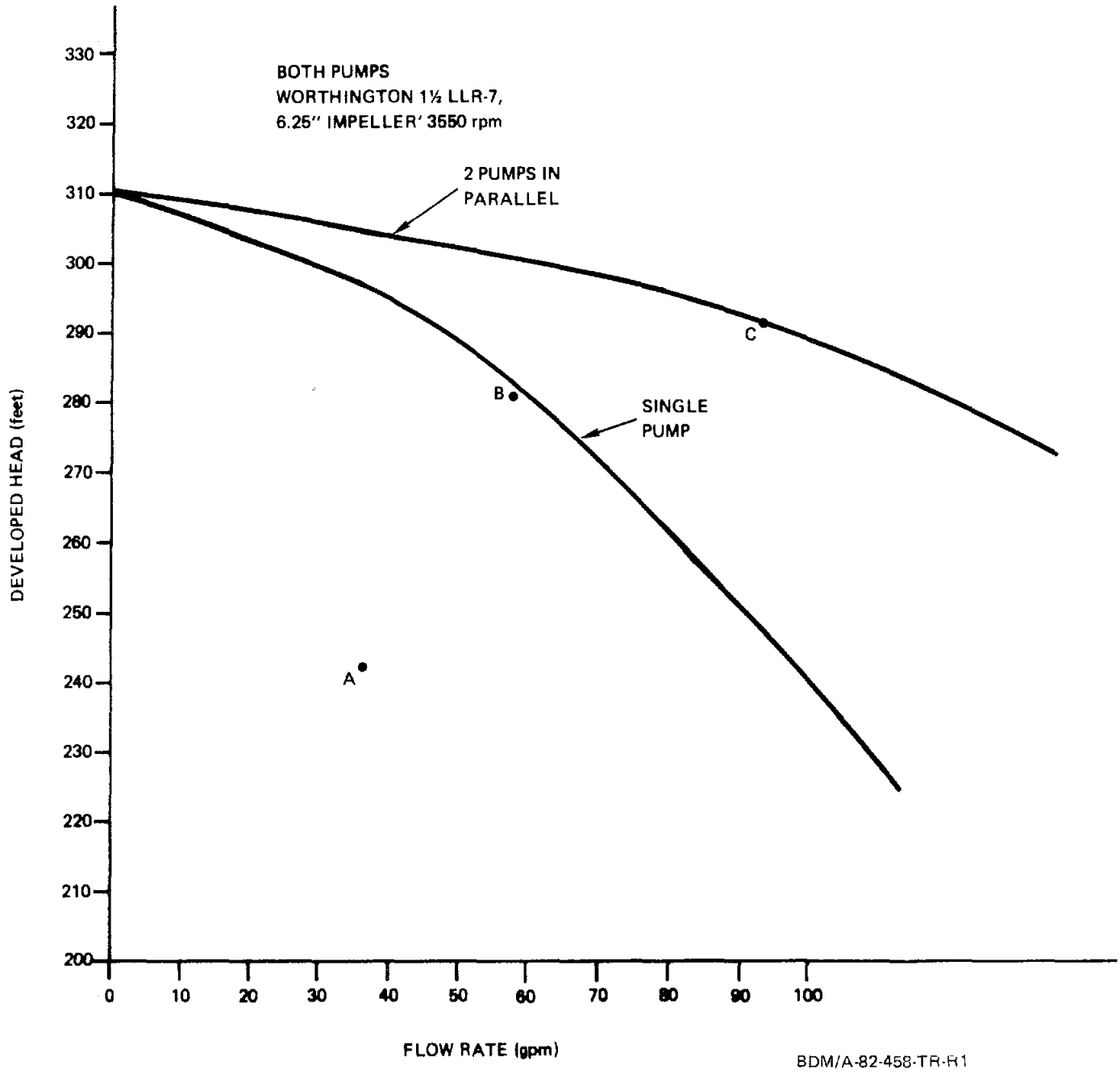

Figure III-9. Pump Characteristics and System Operational Heads

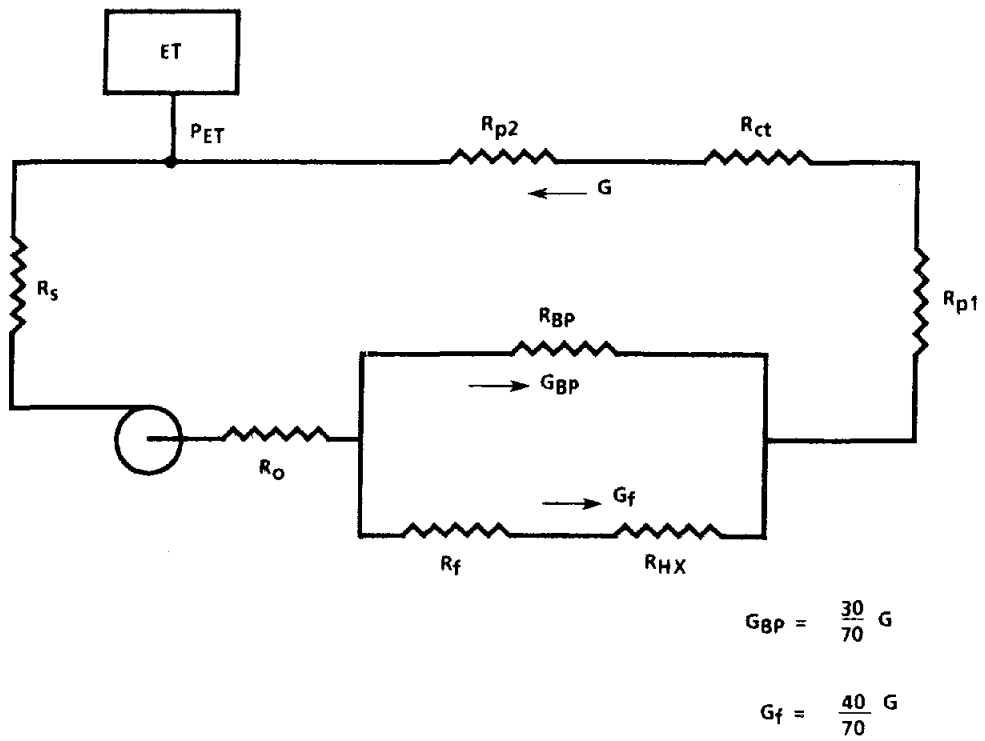

Figure III-10. Flow Resistance Network for the Fresno Hospital

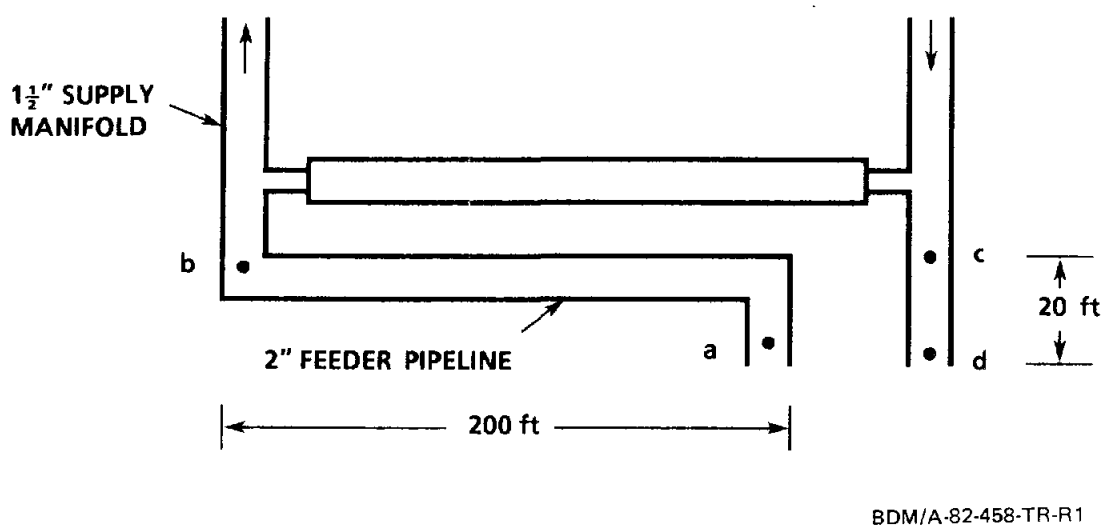

Figure III-11. Collector Field Layout for Flow Resistance Calculations

The equivalent length of two 90° bends is 10 ft (3.05 m) of 2-in (5.08 cm) pipe so that L_{ab} = 230 ft (70.1 m). The pressure drop from c to d is given by equation III-3 where $L = L_{cd}$ = 20 ft (6.1 m). The pressure drop from b to c is given by:

$$\Delta P_{bc} = R_f \ (G_f)^{1.8}$$

where R_f is the field resistance obtained using the procedure in volume II, chapter IV-H. The total series resistance from a to d is then:

$$R_{ad} = R_{ab} + R_f + R_{cd}$$

$$\Delta P_{ad} = R_{ad} \ (G_f)^{1.8} = R_f \ (G_f)^{1.8} + \Delta P_{ab} + \Delta P_{cd}$$

The pressure drop through the heat exchanger can be obtained using manufacturer's data and developing an empirical relation as shown in equation III-4 for a Tranter plate heat exchanger using UX-216 type plates.

$$\Delta P_{hx} = 9.47 \times 10^{-3} \ (G_f/N_c)^{1.8} \ \mu^{0.2} \ \rho^{0.8} \ N_p \qquad \text{(Eq. III-4)}$$

Where:

N_c = number of flow channels (16)
N_p = number of passes (1)

Similarly, an expression for the cooling tower pressure drop may be developed. For the specified cooling tower the pressure drop is 0.4 psi (2760 Pa) at the design flow rate of 70 gpm (4.42×10^{-3} m^3/sec). This gives a pressure drop relation:

$$\Delta P_{ct} = 7 \times 10^{-6} \ G^{1.8} \ \mu^{0.2} \ \rho^{0.8}$$

The distance from the mechanical skid to the cooling tower is 50 ft (15.2 m), so that the pressure drop in the piping from the skid to cooler is:

$$\Delta P_{p1} = \frac{G^{1.8}\ \mu^{0.2}\ \rho^{0.8}\ (100\ ft)}{(4.7 \times 10^4)\ (2.5)^{4.8}}$$

The pressure drop from the edge of the mechanical skid at the return from the cooling towers to the expansion tank inlet is due to 8 ft (2.43 m) of 2.5-in (6.35 cm) pipe, one "T" with an equivalent length of 13 ft (3.96 m), and one air expander with an equivalent length of 85 ft (25.89 m). Thus, the pressure drop is:

$$\Delta P_{p2} = \frac{G^{1.8}\ \mu^{0.2}\ \rho^{0.8}\ (106)}{(4.7 \times 10^4)\ (2.5)^{4.8}}$$

The pressure drop from the expansion tank outlet to the pump inlet is due to 10 ft (3.05 m) of 2.5-in (6.35 cm) pipe, two 90° bends with an equivalent length of 12 ft (3.60 m), and a 2.5-in (6.35 cm) strainer with an equivalent length of 35 ft (10.67 m). Thus:

$$\Delta P_s = \frac{G^{1.8}\ \mu^{0.2}\ \rho^{0.8}\ (57)}{(4.7 \times 10^4)\ (2.5)^{4.8}}$$

The pressure drop from the pump outlet to the mechanical skid exit to the field is due to three 90° elbows with L_{eq} = 18 ft (5.49 m) of 2.5-in (6.35 cm) pipe, a "T" with L_{eq} = 6 ft (1.83 m), and a reduction from 2.5 in (6.35 cm) to 2 in (5.08 cm) with L_{eq} = 1 ft (0.305 m) so that:

$$\Delta P_0 = \frac{G^{1.8}\ \mu^{0.2}\ \rho^{0.8}\ (51)}{(4.7 \times 10^4)\ (2.5)^{4.8}}$$

The pressure drops have been left in terms of the flow rate, viscosity and density so that the system head curve can be plotted at the average operating temperature of 182°F (83.3°C), and the start-up temperature of 68°F (20°C). The gate valve in the parallel leg flowing 30 gpm (1.9×10^{-3} m^3/sec) is set so that the pressure drop across R_{BP} at 30 gpm (1.9×10^{-3} m^3/sec) equals the pressure drop across R_f and R_{HX} at 40 gpm (2.5×10^{-3} m^3/sec). Thus, for any flow rate through the pump, G, the flow rate through the collector field and heat exchanger will be (40/70) G.

The total discharge head, or pressure developed at the pump exit is given by the sum:

$$h_d = \Delta P_o + \Delta P_{ad} + \Delta P_{hx} + \Delta P_{p1} + \Delta P_{ct} + \Delta P_{p2} + \Delta P_{ET}$$

where ΔP_{ET} is the gage pressure in the expansion tank (5 psig or 0.136 MPa maximum). The suction head is:

$$h_s = 5 \text{ psig} - \Delta P_s$$

So the total system head is:

$$H = \Delta P_o + \Delta P_{ad} + \Delta P_{hx} + \Delta P_{p1} + \Delta P_{ct} + \Delta P_{p2} + \Delta P_s$$

The system head curve is shown in figure III-12 where a safety factor of 10 percent was applied to the total system head.

When the field is operating at its maximum temperature, the pressure in the expansion tank is a maximum of 5 psig (0.136 MPa) and the vapor pressure of the ethylene glycol solution at 140°F (60°C) is about 100 mmHg (13.3 kPa) or 1.93 psia. The maximum NPSHA is developed under these conditions and is given by:

$$\text{NPSHA (max)} = 5 \text{ psig} + 14.7 \text{ psia} - 1.93 \text{ psia} - \Delta P_s$$
$$= 16.9 \text{ psia} = 37.9 \text{ ft (11.6 m)}$$

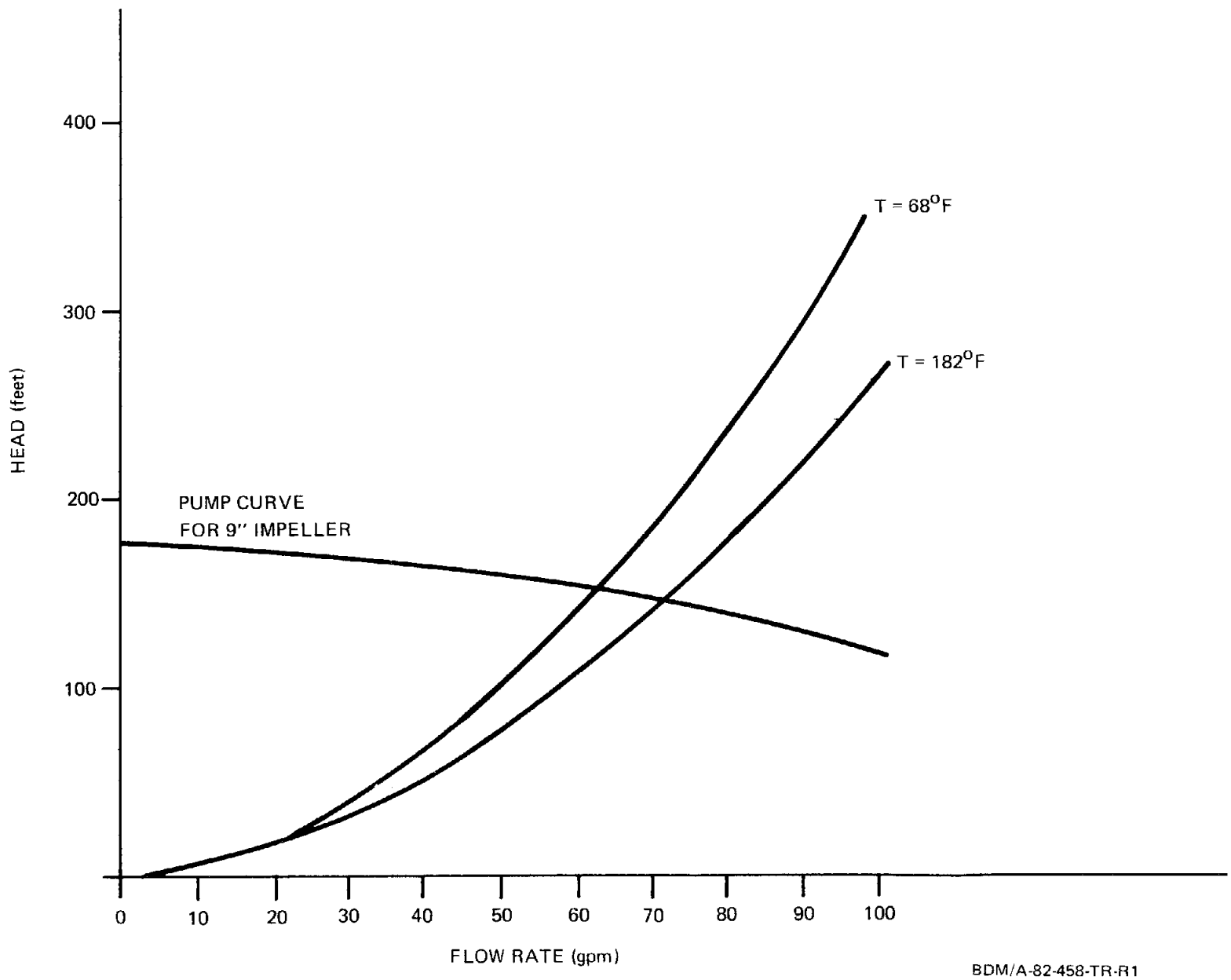

Figure III-12. System and Pump Head Curves for Field Circulation Pumps (CP-1)

Where:

$$\Delta P_s = 0.89 \text{ psi } (6136 \text{ Pa}).$$

The minimum NPSHA is developed at start-up when the fluid temperature is 68°F (20°C), the vapor pressure is 0.29 psia (2000 Pa) and the expansion tank pressure is -2 psig (0.088 MPa). Then:

$$\text{NPSHA (min)} = -2 + 14.7 - 0.29 - \Delta P_s$$
$$= 11.4 \text{ psia} = 26.3 \text{ ft } (8 \text{ m})$$

Where:

$$\Delta P_s = 1.02 \text{ psi } (7032 \text{ Pa})$$

Under the design conditions (and assuming a 10-percent safety factor in the system head) the pump flow rate must be 70 gpm (4.4×10^{-3} m^3/sec) (at an average temperature of 182°F (90°C) into a system head of 140 ft (42.68 m). Based on the design of the mechanical skid, a horizontal in-line, or double- suction pump is required. Using the pump performance curves provided by Worthington Pump Co. for a horizontal split case pump at 1760 rpm, a type 1 1/2 LLR-10 was chosen with characteristic curves shown in figure III-13.

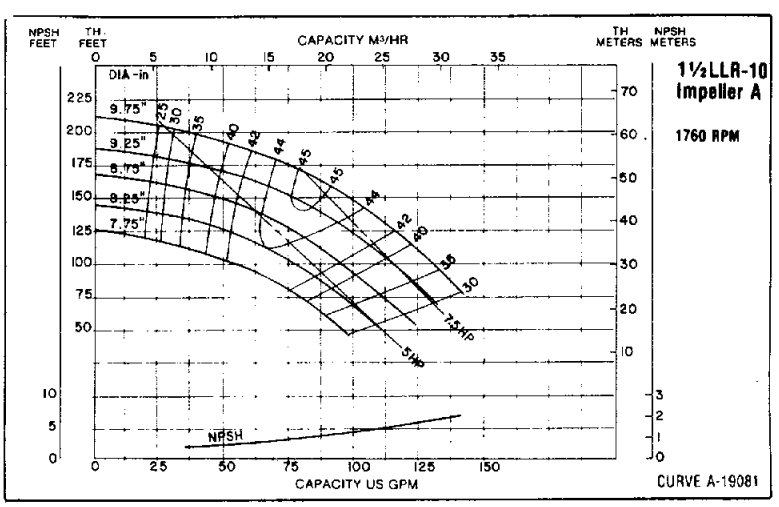

BDM/A-82-458-TR-R1

Figure III-13. Characteristic Pump Head Curves for Worthington Model 1-1/2 LLR-10 1760 rpm, Pump

A pump with a 9.25-in (23.29 cm) impeller develops 155 ft (46.79 m) of head at 70 gpm (4.4×10^{-3} m^3/sec). Using the affinity law:

$$H_1/H_2 = (D_1/D_2)^2$$

$$D_2 = \left[(9.25)^2 \left(\frac{140}{155}\right)\right]^{1/2} = 8.80 \text{ in } (22.4 \text{ cm})$$

Thus, a 9-in (22.86 cm)impeller will be adequate for this pump. The brake horsepower is about 7 hp (5.2 kW) at an efficency of 44 percent. The required NPSH is 3 ft (0.915 m), well below the NPSHA. The pump curve has been superimposed on the system head curve of figure IV-12. At start-up, when the fluid is 68°F (20°C), the flow will be about 64 gpm (4×10^{-3} m^3/sec) into a system head of 155 ft (47.3 m).

D. INSTALLATION PROCEDURES

During the course of the PV-T system design certain procedures and programs have been identified which are considered to be very important in the installation and final start-up of the system, but which are not part of system operation and maintenance once the system is in operation under plant cognizance. These procedures and programs apply principally to the tasks performed by the system supplier.

Presented and discussed in the following paragraphs are procedures applicable to the transportation and delivery of system hardware, onsite construction and assembly, and system preparation and checkout. It is assumed that arrangements have been made between the Albuquerque, New Mexico school management and the system supplier for advance planning and scheduling of the system hardware delivery and onsite coordination of activities during construction and assembly and system start-up and checkout. It is envisioned that the school management will designate a PV-T project engineer to interface directly with the system supplier's general job superintendent.

1. Transportation and Delivery

a. General

The PV-T system hardware will be transported to the installation site from three principal points. The solar collection materials and PV cell subassemblies will be shipped directly from the E-Systems factory in Dallas, Texas to the school site. The cooling tower assembly will be shipped from the respective manufacturer to the site. The remainder of the system hardware, with minor exceptions, will be shipped from the supplier's home base to the site which is in consonance with the PV-T design concept which emphasizes the offsite (shop) fabrication, preassembly, and test of system components and subassemblies to the greatest extent possible.

b. Packaging and Shipping

(1) Collector Materials

The E-Systems collector materials will be shipped from the factory in Dallas, Texas to the user site by commercial trucks. The 72 arrays will be packaged and shipped in racks of three, each weighing approximately 3000 pounds (1360 kg). The receiver tubes with PV cells attached will be preassembled in the collectors. Most equipment such as the post assemblies and assembly axle blocks, will be shipped on pallets, weighing no more than 800 pounds (362 kg). It is estimated that approximately 12 truckloads (six arrays per truck) will be required to ship the collector materials.

(2) Skid Subassemblies

All final assembly, testing and cleaning will be performed before the mechanical skid is prepared for shipment. The skid has been sized and the equipment arranged to facilitate handling and road transportation. The shipping weight will be approximately 5000 pounds (2268 kg) with the expansion tank, heat exchanger, pump and piping well distributed to facilitate balance on the 11 ft by 25 ft (3.35 by 7.62 m) steel I-beam base. The steel base incorporates six lifting lugs for crane

handling with a spreader bar. Prior to shipment, the flanged ends of the ethylene glycol (EG) circulation loop and the domestic water (DW) loop piping will be braced to prevent movement during handling and transportation.

The packaged cooling towers incorporate lifting lugs and will be handled by crane in the same manner as the mechanical equipment skid.

c. Materials Delivery

(1) Collector Materials

The collector materials will be delivered to the school at such time as the required PV-T site preparation is complete (grading, foundations, service roads and drives, etc.) and the system supplier is mobilized onsite and ready to proceed with hardware assembly. The array racks, post assemblies and assembly axle blocks will be unloaded with requisite lifting equipment and placed so as to minimize handling distances during installation.

(2) Other Materials

The shop fabricated components and subassemblies and other materials will be delivered at a time roughly coinciding with completion of the erection and assembly of the collector arrays. The skid subassemblies will be unloaded from the trucks onto the prepared foundation pads and properly positioned for hookup.

2. Onsite Organization and Management

A job superintendent and assistant who are full-time employees of the PV-T supplier and are ultimately familiar with the system will be responsible for overall onsite direction and supervision during installation and checkout.

It is assumed that the bulk of the labor and skills required for the system installation can be procured in the general locale of the school. Key mechanical and electrical tasks will be accomplished by system supplier mechanical and electrical subcontractors.

3. Construction and Assembly

The onsite construction and assembly for the installation of the PV-T system can be broken down into a number of general tasks. The procedures involved in carrying out these tasks are discussed in the following paragraphs. These procedures assume that the school site has been prepared in accordance with the drawings and specifications.

a. Installation of the Collector Field

The installation of the collector arrays, the ethylene glycol/water loop piping and domestic water piping are major tasks that require lead work by the system supplier.

(1) Collector Array Installation

Each collector array is composed of four collector modules that are factory-assembled complete with receiver tubes and PV cells mounted. Each row in turn consists of nine collector arrays supported on seven idler post assemblies, one main drive post, and two intermediate drive post assemblies. The initial step in the assembly of the row is the placement and alignment of the idler and drive posts. After the posts have been aligned and the mounting bolts tightened the post assembly axle blocks are installed and the collector arrays mounted. The interconnect horizontal drive shaft is then installed on each post.

The next step is to level all array units by rotating the upper speed reducer input shaft and install the frame splices. The end pulley assemblies on each end array unit are now installed and the vertical drive shafts pinned to the respective lower gear box.

After securing the modules on the center array unit to prevent rotation, align all the modules in the array unit to the center array unit using the alignment tool provided. The collector drive bar splice is now installed between the aligned array units.

The final step in the assembly of the collector array row is the installation of the tilt sensor and connection of the cabling from the sensor to the local box on the main drive and

the interconnection of the DC power cables in series between arrays in the electrical row.

(2) Installation of Array Loop Pipe Sections

After the collector array rows have been assembled, the shop fabricated 1-in (2.54 cm) diameter pipe sections with in-line components are installed to connect nine arrays in a delta-T string. The strings are supplied return coolant from the 1-1/2-in (3.8 cm) supply and hot fluid is collected in the 1-1/2-in (3.8 cm) return manifold. Installed in each string are an inlet and outlet section at the manifold ends of the string. Shop fabricated supports are installed on prepared foundations to support the manifolds.

b. Installation of EG Circulation Loop Field Pipe Sections

This work consists of the assembly and hookup of the following field piping:

(1) Two-inch (5.08 cm) diameter pipe from the mechanical skid to the collector field.

(2) Two-and-one-half-inch (6.35 cm) diameter pipe from the mechanical skid to the cooling towers.

(3) Two-inch (5.08 cm) diameter pipe from the collector field to the mechanical skid.

Various sections of the EG field piping are shop fabricated to facilitate the site work. Shop fabricated pipe supports and anchors are installed on prepared foundations at points required. The assembly of this piping requires a combination of welded and bolted flanged connections. All EG circulation loop field fabricated piping will be thoroughly cleaned as work progresses to minimizes harmful contamination of the field loop.

c. Installation of DW Circulation Loop Pipe Sections

This work consists of the assembly and hookup of the following piping:

(1) Two-inch (5.08 cm) diameter pipe from the feed water pump to the mechanical skid.

(2) Two-and-one-half-inch (6.35 cm) diameter pipe in the temperature control bypass loop.

Like the EG circulation loop various sections are prefabricated and the same cleaning and assembly precautions apply.

d. Installation of Electrical/Control Distribution

This work consists of the installation and hookup of the underground direct burial cabling, the above ground rigid conduit, transformers, inverters, and switchgear for electrical power supply and array power takeoff. The following field connections are required:

(1) Two-wire DC direct burial cable from each of the eight electrical rows to the two subfield M&S enclosures. There are five electrical loops to each subfield M&S.

(2) Two-wire DC direct burial cable from each of the two subfield M&S enclosures to the two safety switches in the electrical control building.

(3) Busses from safety switches to the inverter.

(4) Busses from inverter to AC switchgear and transformer.

(5) Installation of AC distribution panels and utility outlets.

(6) Two-wire AC direct burial cable from distribution panel to drive and intermediate drive posts.

(7) UPS to the hazard panel and master tracking controller.

(8) IPS to the AC panel board.

The electrical/control distribution work will be started as soon as the collectors, transformers, inverters, electrical control building and other materials are onsite and installation has proceeded to a point permitting phased electrical connections.

After electrical/control distribution system has been installed and the system energized, a thorough operational test will be made to ensure the operational integrity and safety of the system.

ALBUQUERQUE PUBLIC SCHOOL

P.V.T.

02F001832

DRAWING INDEX

SHT. NO.	TITLE
1	ELECTRICAL BLOCK DIAGRAM
2	ELECTRICAL FIELD SCHEMATIC
3	OUTDOOR SUBFIELD MAINTENANCE & SAFETY ENCLOSURE
4	
5	A.C. ONELINE DIAGRAM
6	ELECTRICAL CONTROL BUILDING LAYOUT & ARRANGEMENT
7	FIELD COUNTERPOISE GROUNDING LAYOUT
8	
9	
10	
11	COLLECTOR ARRAY LAYOUT
12	COLLECTOR PIER LAYOUT
13	PIPING & INSTRUMENTATION DIAGRAM
14	MECHANICAL SKID
15	MANIFOLD DETAILS
16	BLOCK FLOW DIAGRAM
17	
18	
19	
20	

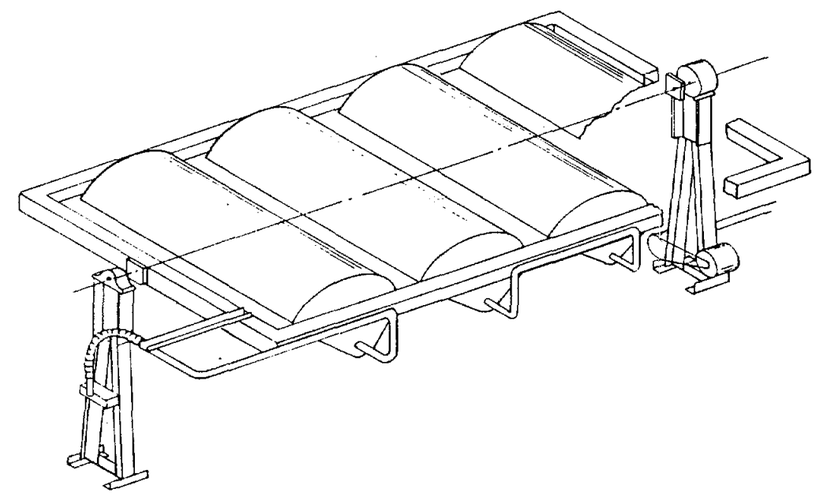

Drawing E-1

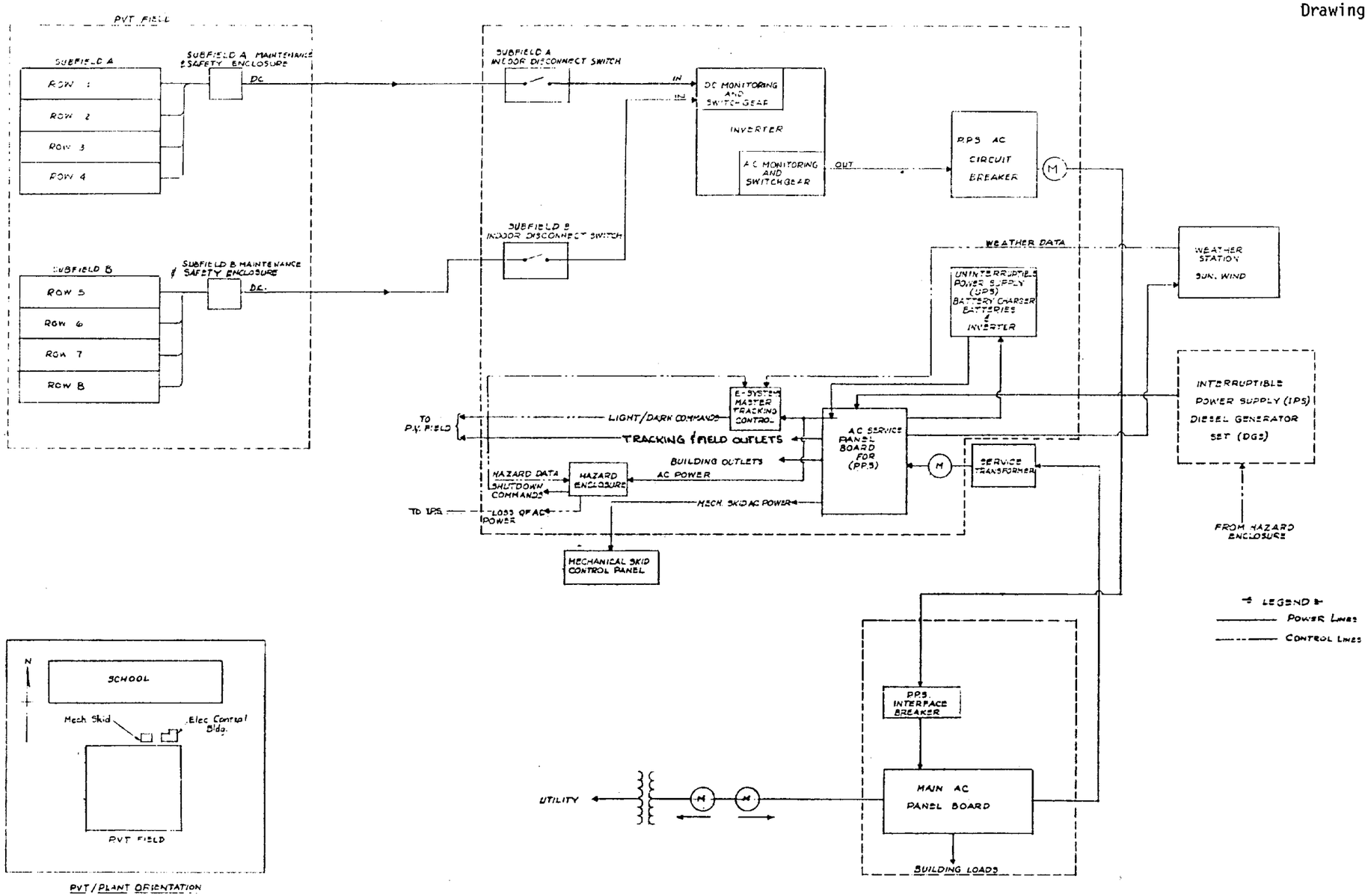

PVT/PLANT ORIENTATION

ELECTRICAL BLOCK DIAGRAM

ALBUQUERQUE PUBLIC SCHOOL P.V.T.
ALBUQUERQUE, NEW MEXICO

52308 F - 02 F00 1852

NONE

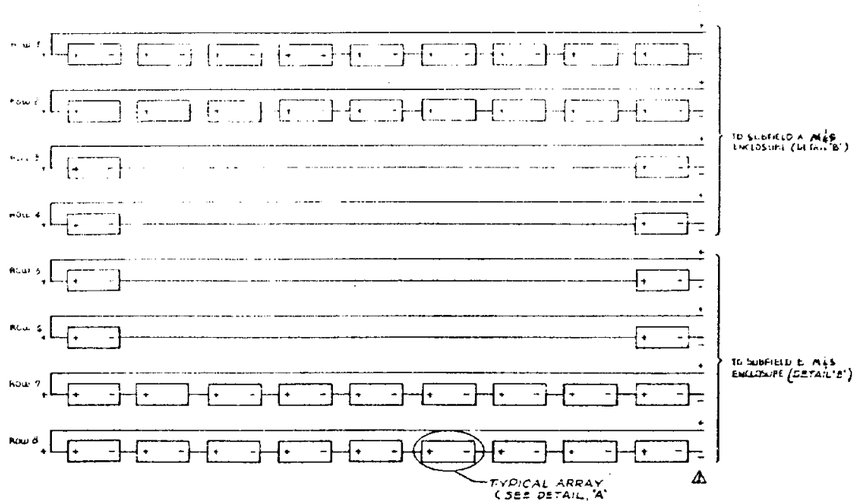

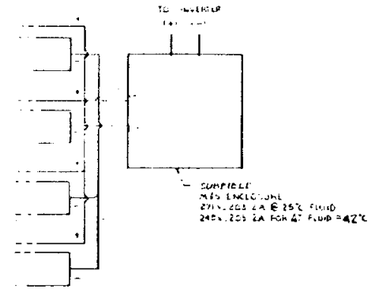

DETAIL "B"

TYPICAL WIRING TO SUBFIELD MAINTENANCE AND SAFETY (M&S) ENCLOSURE (B)

NOTES.

TERMINATE EACH END OF EACH STRING IN JUNCTION BOX AT END VERTICAL POST. DIRECT BURIAL CONDUCTORS TO BE IN CONDUIT FROM J-BOX TO UNDERGROUND. CONDUIT TERMINATES TWO FEET BELOW GROUND. CONDUCTORS ARE ROUTED IN TRENCHES TO M&S. ENCLOSURE. WHERE CONDUIT TAKES CONNECTORS FROM UNDERGROUND TO ENCLOSURE.

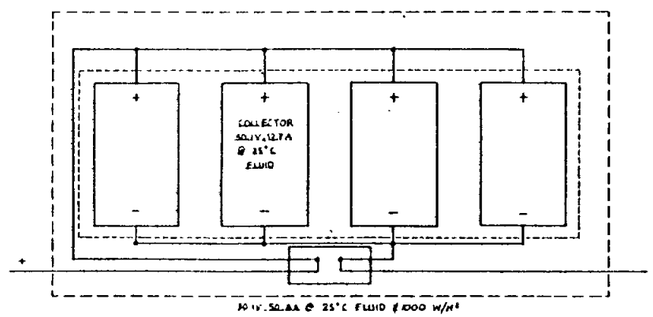

DETAIL "A" ARRAY

ALBUQUERQUE PUBLIC SCHOOLS ELECTRICAL FIELD SCHEMATIC

NO. REQ'D	PART NO.	MATERIAL	DESCRIPTION	ITEM NO.

LIST OF MATERIAL

DRAWN K. Cox 11-6-83
CHECKED 11-6-83
ENGINEER
PROJ. ENGR.
PROGRAM MANAGER

MATERIAL
FINISH
TOLERANCES UNLESS OTHERWISE SPECIFIED DIMENSIONS ARE IN INCHES CONTRACT SR. CONT. CENTER

BDM

TITLE ELECTRICAL FIELD SCHEMATIC

ALBUQUERQUE PUBLIC SCHOOL P.V.T.
ALBUQUERQUE, NEW MEXICO

DOC. CONT. 52308 SIZE F DWG. NO. 02 F00 1832 REV

SCALE NONE SHEET 2

NEXT ASSY

APPLICATION

Drawing E-3

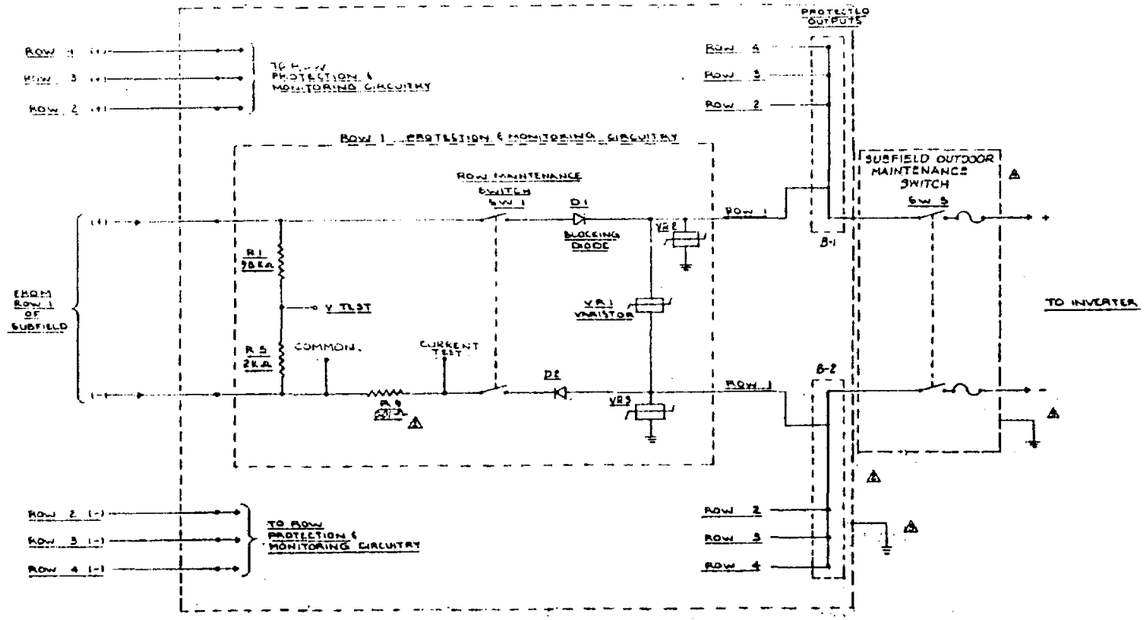

⚠ CURRENT SHUNT CARRIES FULL CURRENT UNDER NORMAL OPERATION. CURRENT TEST POINT WILL BE POSITIVE WITH RESPECT TO COMMON

⚠ M&S ENCLOSURE AND MAINTENANCE SWITCH ARE MOUNTED NEAR POST AT ROW 3 NEGATIVE TERMINAL

⚠ GROUND M&S ENCLOSURE AND MAINTENANCE SWITCH CASE TO COUNTERPOISE

⚠ DC CABLES TO & FROM ENCLOSURES TO BE DIRECT BURIAL UNDERGROUND SERVICE TYPE. CABLES ABOVE GROUND ARE IN CONDUIT. CONDUIT TERMINATES TWO FEET BELOW GRADE. CABLE RUNS IN THE FIELD AND TO THE ELECTRICAL CONTROL BUILDING ARE TWO FEET BELOW GRADE WITHOUT CONDUIT.

ITEM NO.	DESCRIPTION	NO. REQD	PART NO.
EN-1	NEMA 3R ENCLOSURE (48"H. x 30"W. x 16"D.)	1	
R1-4	RESISTOR, 98 KΩ, 1W. 1%	4	(DALE) WWA-49 (OR EQ.)
R5-8	RESISTOR, 2 KΩ, 0.1 W, 1%	4	(DALE) EMF 50-10 (")
R9-12	RESISTOR, 0.01Ω, 50W., 1%	4	(DALE) RH-50 (OR EQ.)
SW1-4	SWITCH, 2 POLE, 600VDC, 60A.	4	(SQUARE D) HU-222
VR1-12	VARISTOR, 420 V.	12	(GE) V320 PA 40A
D1-8	DIODE, 1200 V. 70A	8	(IR) TRKE 71-12
SW-5	SWITCH, 2 POLE, 600VDC, 400A FUSIBLE, RAINPROOF	1	(SQUARE D) H 225 R
B1-2	BUSBAR, 400 A., 5 TERMINAL	2	

SBDM

OUTDOOR SUBFIELD MAINTENANCE AND SAFETY ENCLOSURE

ALBUQUERQUE PUBLIC SCHOOL P.V.T.
ALBUQUERQUE, NEW MEXICO

52308 F 02 F00 1832

SCALE NONE

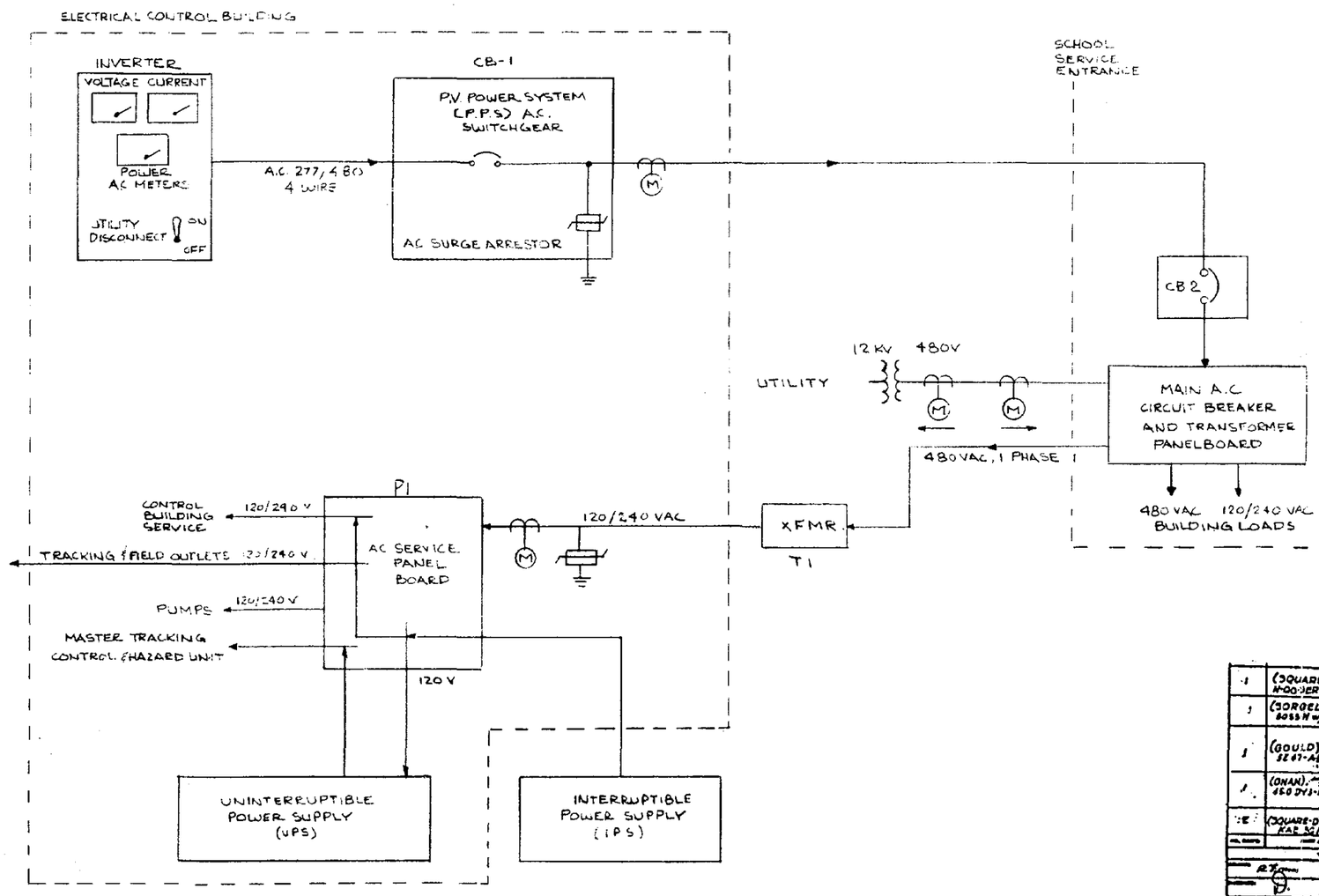

1	(SQUARE D) H-00 SERIES		A.C. SERVICE CIRCUIT BREAKER PANEL BOARD 240 V, SINGLE PHASE, 3 WIRE.	P-1
1	(SORGEL) 5055 N w/ W-5565		TRANSFORMER, DRY TYPE, 60 KW, 480V to 120/240 V. W/ WEATHER SHIELD	T-1
1	(GOULD) SE 87-A5		UNINTERRUPTIBLE POWER SUPPLY, 5 KVA INVERTER, 16 VAC, 1 PHASE, 60 Hz W/CLOSED CELL BATTERIES AND RECTIFIER-120 VAC to 125 VDC.	UPS
1	(ONAN) 450 DV3-5R		INTERRUPTIBLE POWER SUPPLY. DIESEL GENERATOR SET 45 KW W/ EVC. 30 CELLS, 65 AH FLOODED BATTERIES	IPS
1	(SQUARE-D) KAL 36/505		ENCLOSED 3 POLE CIRCUIT BREAKER, 480 VAC. KEF4 ENCLOSURE W/ 300A BREAKER	CB 2

BDM

A.C. ONE LINE DIAGRAM

ALBUQUERQUE PUBLIC SCHOOL P.V.T.
ALBUQUERQUE, NEW MEXICO

S2308 | F | 02 F00 1832

NONE

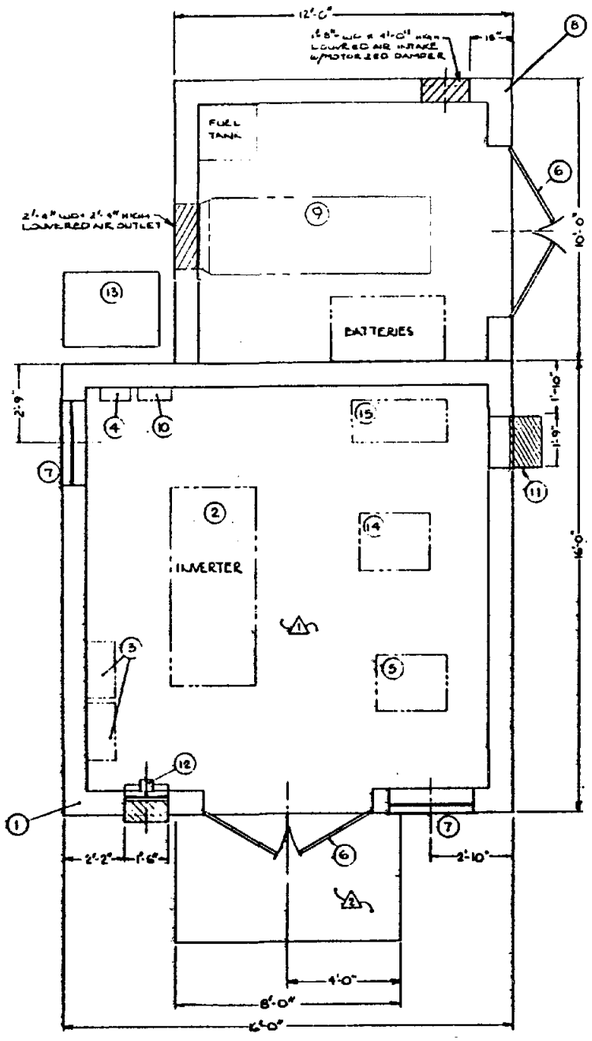

FLOOR PLAN
SCALE ¼" = 1'-0"

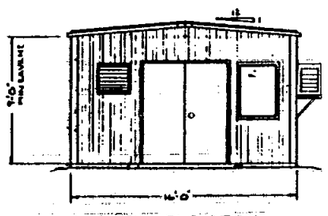

SOUTH ELEVATION
SCALE: ¼" = 1'-0"

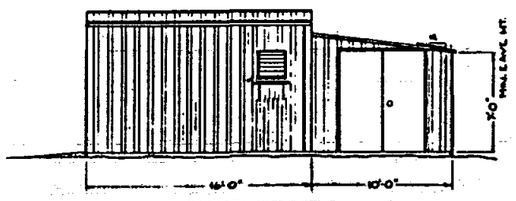

EAST ELEVATION
SCALE: ¼" = 1'-0"

ITEM NO.	DESCRIPTION	NO. REQ'D
1	BUILDING STRAN-STEEL MASTER SERIES, 16'L x 16'W x 8' EAVE HT, 1 on 12 ROOF SLOPE	1
2	BESTA INVERTER (7'0" H x 3'0" DP x 6'4" W)	1
3	SNOFFIELD DISCONNECT SWITCH 3 POLE, 600 VAC, 400A, NEMA 1, (SQUARE D), INDEX (38 3/4" H x 25 1/4" W x (2" CHS)	2
4	PV POWER SYSTEM (PPS) CIRCUIT BREAKER PANEL (18 3/4" H x 12 1/4" W x 5 3/8" DP)	1
5	MASTER TRACKING CONTROL AND HAZARD UNIT	1
6	METAL DOORS (3' x 7')	4
7	WINDOWS (4' H x 3' W)	2
8	GENERATOR ENCLOSURE (16' W x 12' L x 7' EAVE HT.) 1 ON 12 ROOF SLOPE	1
9	DIESEL-DRIVEN GENERATOR SET RADIATOR-COOLED, 4250 GAL. TANK AND ENGINE-START BATTERIES	1
10	AC SERVICE PANEL BOARD (APPROX. 42" H x 14" W x 5" DP)	1
11	EVAPORATIVE COOLER	1
12	EXHAUST FAN 800CFM, 120 VAC, W/LOUVERED EXHAUST PORT	1
13	SERVICE TRANSFORMER 240x480 PRIMARY TO 120/220 SECONDARY, 50 kVA	1
14	UPS SYSTEM (61" H x 24" W x 30" DP)	1
15	BATTERY BANK, CLOSED CEL CELL (APPROX. 30" H x 48" L x 18" DP)	

NOTES

1. CONCRETE SLAB 6" THICK, W.W. FABRIC REINF. 6x6 x 6A. ALL FOUR EDGES OF CONCRETE SLAB SHALL BE TURNED DOWN AS SHOWN BELOW.

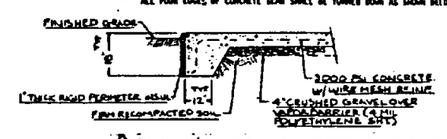

2. SLOPED CONCRETE APRON 6'0" x 8'0" x 6" THICK. SLOPE 3" OVER 4'0".

ELECTRICAL EQUIPMENT BUILDING LAYOUT / ARRANGEMENT

ALBUQUERQUE PUBLIC SCHOOL P.V.T.
ALBUQUERQUE, NEW MEXICO

52308 | F | 02F001B52

SCALE AS NOTED

Drawing E-6

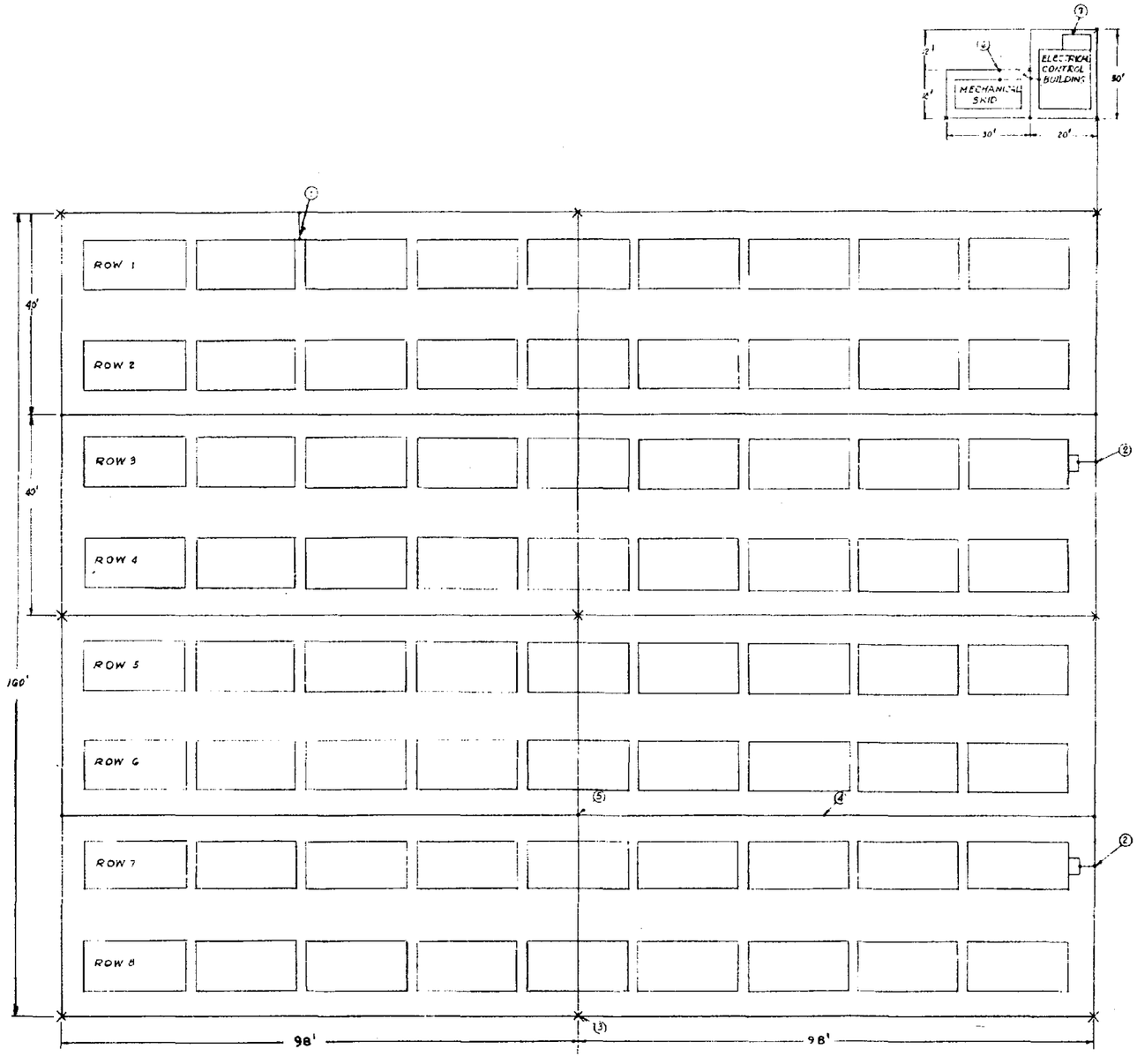

NOTE

(1) GROUND ALL VERTICAL POSTS TO COUNTERPOISE

(2) GROUND EACH SUBFIELD MAINTENANCE AND SAFETY ENCLOSURE CASE.

(3) 10 ft GROUND RODS EVERY 80-100 ft.

(4) AWG #4/0 STRANDED BARE COPPER WIRE BURIED 2' DEEP

(5) COUNTERPOISE CONNECTED AT ALL INTERSECTIONS. (BURNDY OR EQUIVALENT BOLTED CABLE TO CABLE CONNECTOR)

(6) GROUND BUILDING AND MECHANICAL SKID ON ALL FOUR SIDES AND ALL ELECTRICAL EQUIPMENT CASES TO COUNTERPOISE WITH #4/0 STRANDED BARE COPPER WIRE.

(7) ELECTRICAL CONTROL BUILDING AND MECHANICAL SKID TO BE PROTECTED BY LIGHTNING AIR TERMINALS GROUNDED TO COUNTERPOISE.

DRAWN R. Fierro	DATE 3/5/82	MATERIAL	
CHECKED	8-5-83		
ENGINEER	12-20-82		
PROJECT ENGINEER			
PROJECT MANAGER	12/14/83		

TOLERANCES

FIELD COUNTERPOISE GROUNDING LAYOUT

ALBUQUERQUE PUBLIC SCHOOL P.V.T.
ALBUQUERQUE, NEW MEXICO

DWG NO	SIZE	DWG NO
52308	F	OE FOO 1831

SCALE None — SHEET 7

Drawing M-1

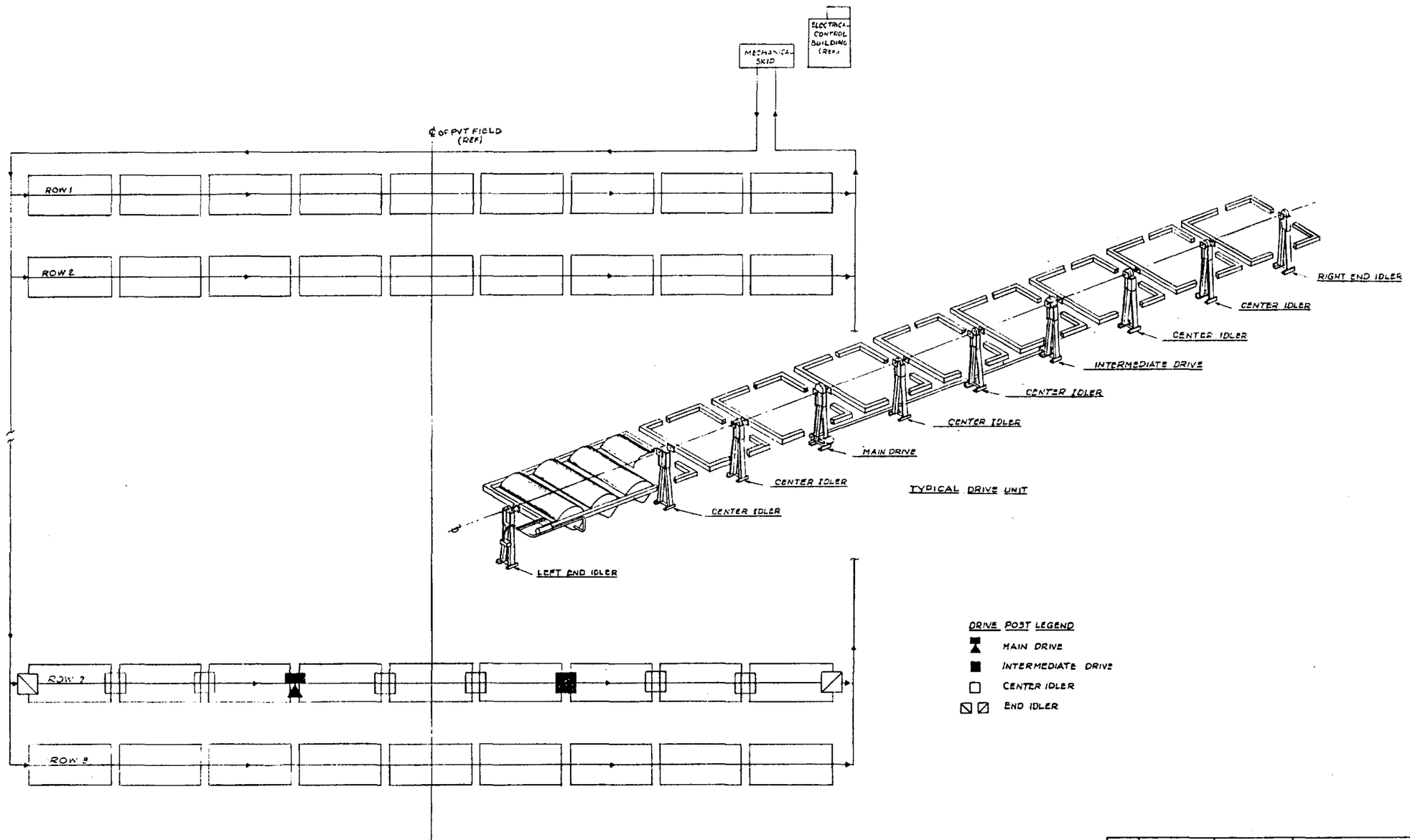

LIST OF MATERIAL

NO. REQ'D	PART NO.	MATERIAL	DESCRIPTION	ITEM NO.

DRAWN K. Parker 5/16/81
CHECKED 1-16-85
ENGINEER N.E. 5/16/81
FINAL CHECK
PROGRAM MANAGER N.E. 5/16/81
TOLERANCES
UNLESS OTHERWISE SPECIFIED DIMENSIONS ARE IN INCHES TOLERANCE ON DIMENSIONS
APPLICATION
NEXT ASSY

BDM

TITLE COLLECTOR ARRAY LAYOUT

ALBUQUERQUE PUBLIC SCHOOL P.V.T.
ALBUQUERQUE, NEW MEXICO

SIZE	CODE IDENT	DWG. NO.	REV
	52308	F — 02 F001832	

SCALE NONE SHEET 11

Drawing M-3

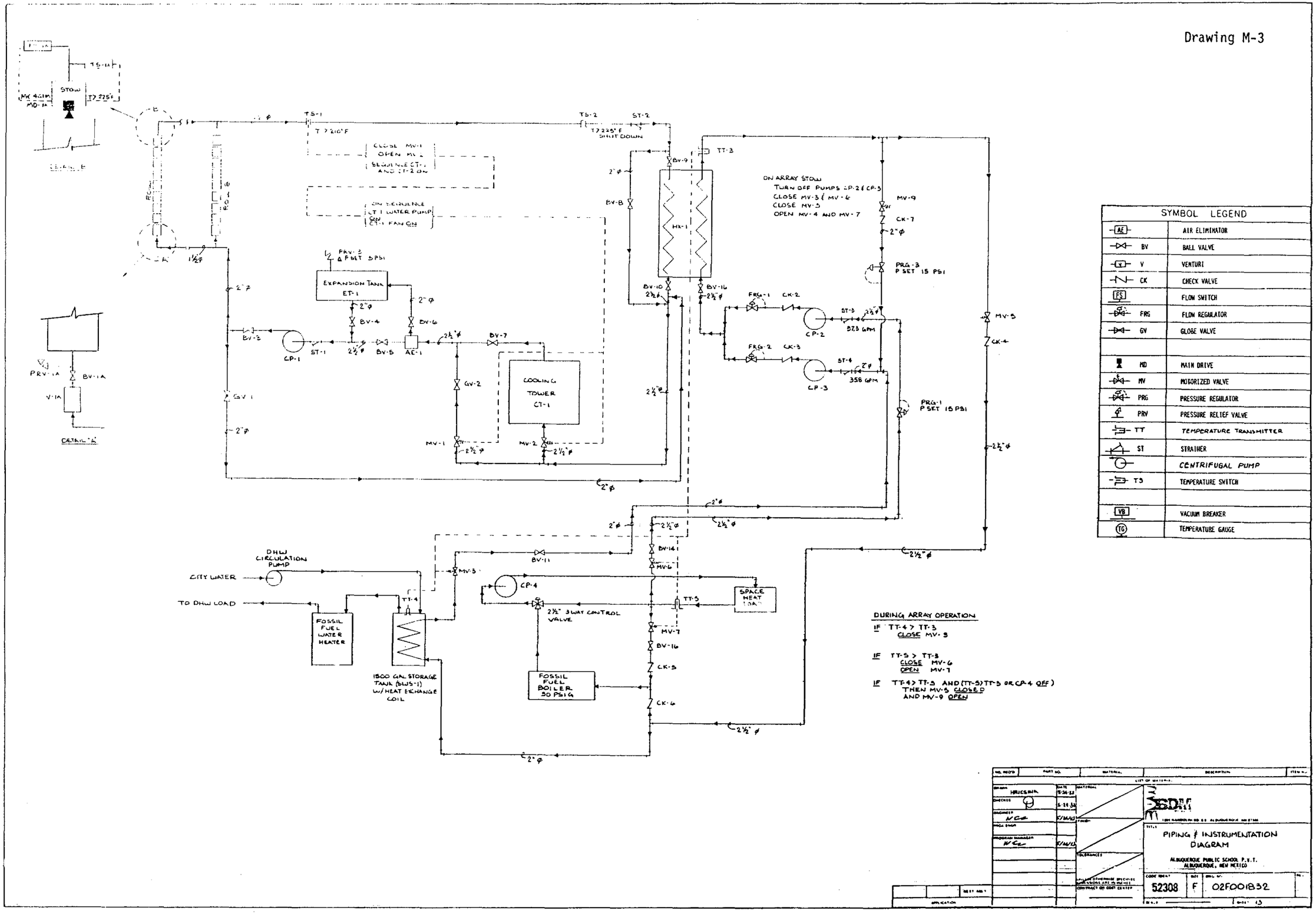
STOW
MV-4 (GIM)
MD-1A
T > 225°F
TS-1A
DETAIL "B"
TS-1
T > 210°F
TS-2
ST-2
T > 225°F SHUT DOWN
CLOSE MV-1
OPEN MV-2
SEQUENCE CT-1 AND CT-2 ON
ON SEQUENCE CT-1 WATER PUMP ON CT-1 FAN ON
TT-3
BV-9
BV-8
HX-1
ON ARRAY STOW
TURN OFF PUMPS CP-2 & CP-3
CLOSE MV-3 & MV-6
CLOSE MV-5
OPEN MV-4 AND MV-7
MV-9
CK-7
PRG-3 P SET 15 PSI
PRV-2 ΔP SET 5 PSI
EXPANSION TANK ET-1
BV-4
BV-6
BV-2
CP-1
ST-1
BV-5
AE-1
BV-7
GV-2
COOLING TOWER CT-1
MV-1
MV-2
BV-10
BV-16
FRG-1
CK-2
CP-2
ST-3
873 GPM
FRG-2
CK-3
CP-3
ST-4
358 GPM
PRG-1 P SET 15 PSI
MV-5
CK-4
PRV-1A
BV-1A
V-1A
DETAIL "A"
GV-1
2"φ
2½"φ
1½"φ
DHW CIRCULATION PUMP
CITY WATER
TO DHW LOAD
FOSSIL FUEL WATER HEATER
TT-4
1500 GAL STORAGE TANK (BLUS-1) W/HEAT EXCHANGE COIL
BV-11
MV-3
CP-4
2½" 3 WAY CONTROL VALVE
FOSSIL FUEL BOILER 30 PSIG
BV-14
MV-6
TT-5
SPACE HEAT LOAD
MV-7
BV-16
CK-5
CK-6
DURING ARRAY OPERATION
IF TT-4 > TT-3
CLOSE MV-3
IF TT-5 > TT-3
CLOSE MV-6
OPEN MV-7
IF TT-4 > TT-3 AND (TT-5) TT-3 OR CP-4 OFF)
THEN MV-3 CLOSED
AND MV-9 OPEN
SYMBOL LEGEND
AE AIR ELIMINATOR
BV BALL VALVE
V VENTURI
CK CHECK VALVE
FS FLOW SWITCH
FRG FLOW REGULATOR
GV GLOBE VALVE
MD MAIN DRIVE
MV MOTORIZED VALVE
PRG PRESSURE REGULATOR
PRV PRESSURE RELIEF VALVE
TT TEMPERATURE TRANSMITTER
ST STRAINER
CENTRIFUGAL PUMP
TS TEMPERATURE SWITCH
VB VACUUM BREAKER
TG TEMPERATURE GAUGE
PIPING & INSTRUMENTATION DIAGRAM
ALBUQUERQUE PUBLIC SCHOOL P.V.T.
ALBUQUERQUE, NEW MEXICO
52308
F
02F001832

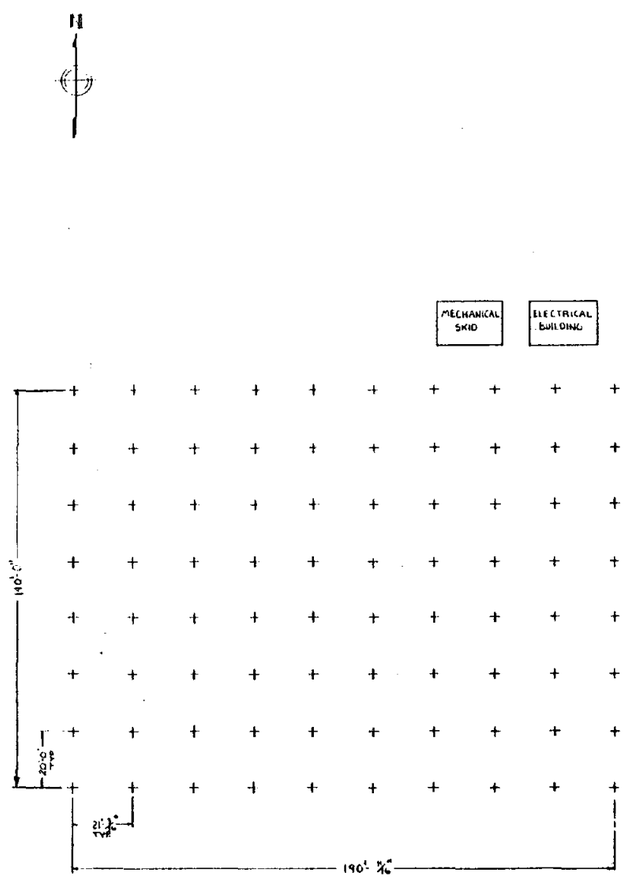

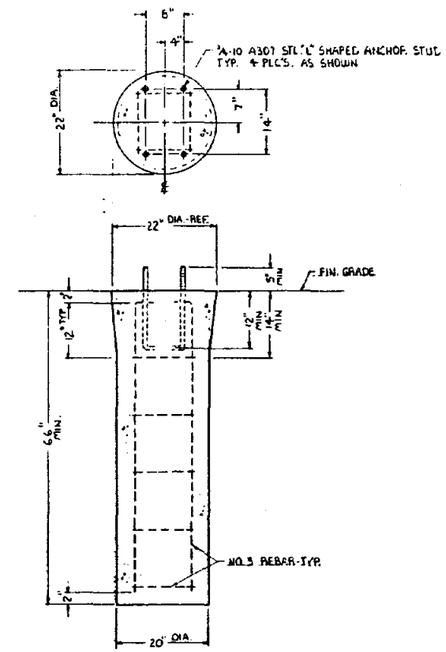

TYPICAL FOUNDATION PIER DETAIL
SCALE: 1" = 1'-0"

NO. REQ'D	PART NO.	MATERIAL	DESCRIPTION	ITEM NO.

LIST OF MATERIAL

DRAWN R Tijerina 11/14/81
CHECKED 11-16-81
ENGINEER 11/16/81
MECH. ENGR.
PROGRAM MANAGER 11/16/81

MATERIAL
FINISH
TOLERANCES
UNLESS OTHERWISE SPECIFIED DIMENSIONS ARE IN INCHES DIMENSIONS ARE AT DRAFT CENTER

TITLE
COLLECTOR PIER
LAYOUT
ALBUQUERQUE PUBLIC SCHOOL P.V.T.
ALBUQUERQUE, NEW MEXICO

SDRC IDENT NO. 52308
DWG. NO. 02 F00 1832
SCALE NONE
SHEET 12

APPLICATION

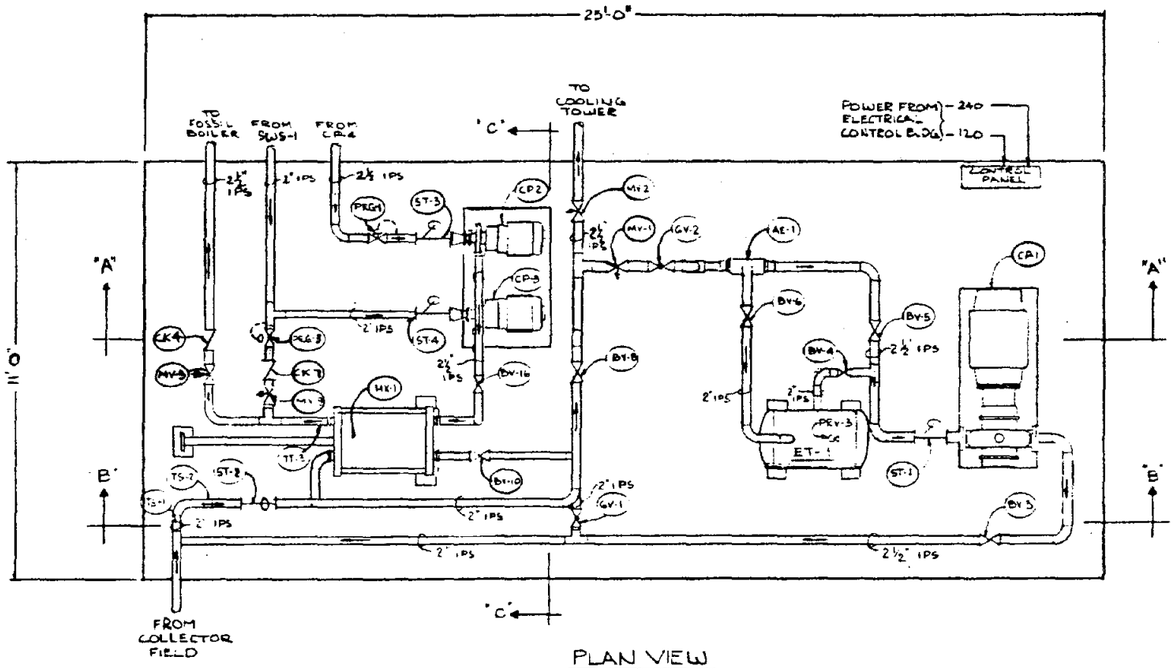

PLAN VIEW

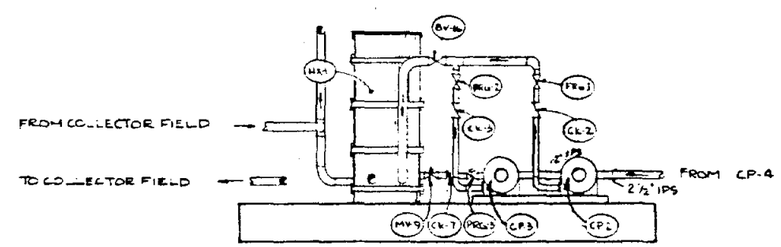

SECTION 'C-C'

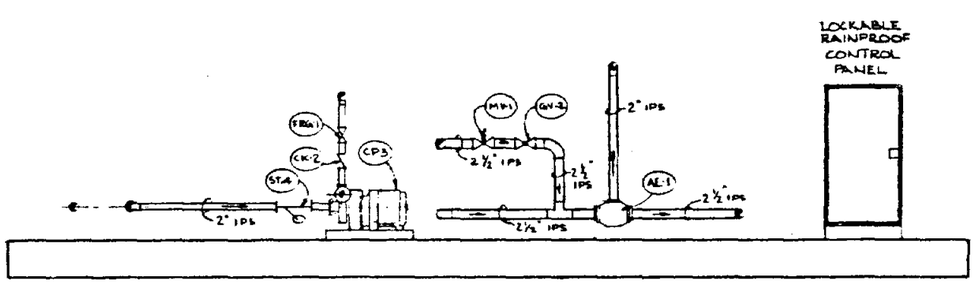

SECTION "A-A"

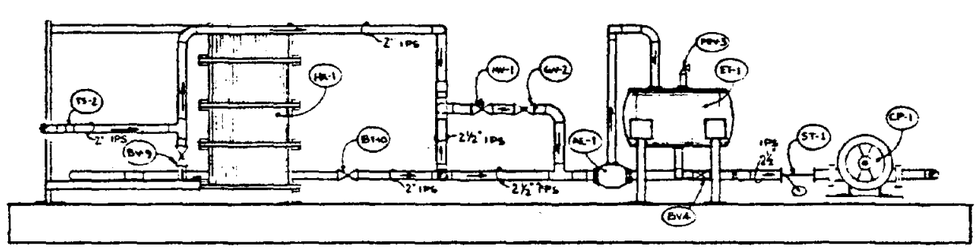

SECTION "B-B"

NOTES:

1. ALL PIPE TO PIPE FITTINGS TO BE SCHEDULE 40.
2. ALL PIPE TO BE WRAPPED WITH 1½" OF FIBERGLASS INSULATION WITH .016 THK. ALUMINUM JACKETING OVER.
3. INSULATION SHALL BE INSTALLED IN SUCH A MANNER AS TO PROVIDE ACCESS FOR THE OPERATION AND/OR ADJUSTMENT OF VALVES.

NO. REQ'D	PART NO.	MATERIAL	DESCRIPTION	ITEM NO.
			LIST OF MATERIAL	

DRAWN HRKELIA DATE 5-16-83
CHECKED 5-19-83
ENGINEER 6/16/83
FINAL DESIGN
PROGRAM MANAGER 6/16/83
MATERIAL
FINISH
TOLERANCES
UNLESS OTHERWISE SPECIFIED DIMENSIONS ARE IN INCHES CONTRACT OR SHOP CENTER

BDM CORPORATION
1801 GARDEN OF THE G.S., ALBUQUERQUE, NM 87106

TITLE
MECHANICAL SKID

ALBUQUERQUE PUBLIC SCHOOL P.V.T.
ALBUQUERQUE, NEW MEXICO

DWG NO. 52308 SIZE E SERIAL NO. 02F001832 REV.
SCALE ½" = 1'-0" SHEET 14

APPLICATION NEXT ASSY

Drawing M-5

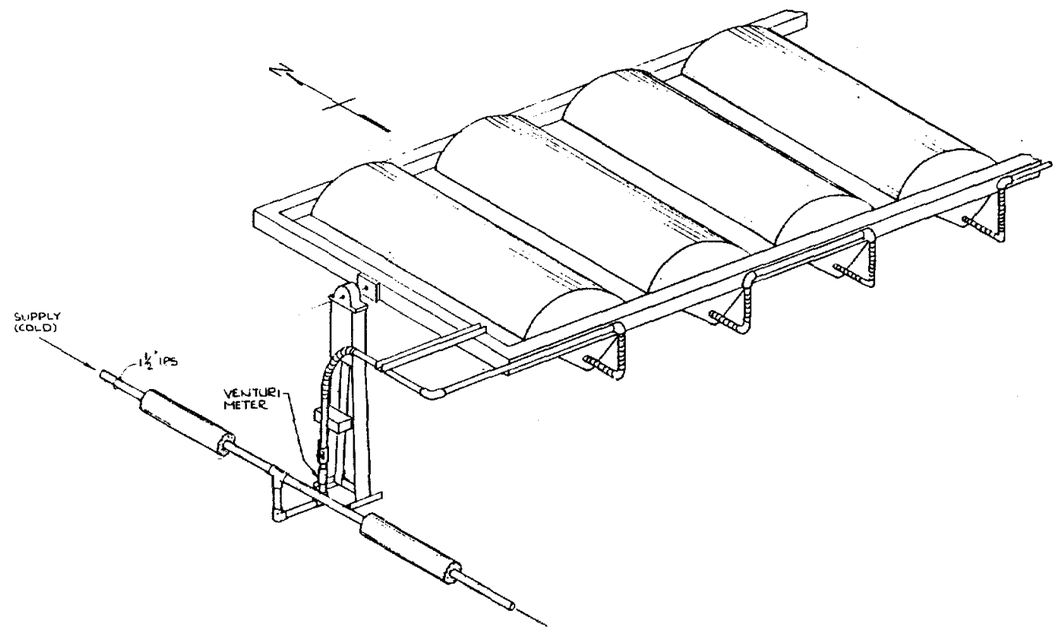

NO. REQ'D	PART NO	MATERIAL	DESCRIPTION	ITEM NO.

LIST OF MATERIAL

DRAWN		DATE
CHECKED		
ENGINEER		
PROJ. ENGR.		
ENGINEERING MANAGER		

MATERIAL

FINISH

TOLERANCES

UNLESS OTHERWISE SPECIFIED DIMENSIONS ARE IN INCHES CONTRACT OR SHOP DRAWING

APPLICATION

NEXT ASSY

SBDM

TITLE

MANIFOLD DETAILS

: ALBUQUERQUE PUBLIC SCHOOL P.V.T.
ALBUQUERQUE, NEW MEXICO

DRAW GRUPT.	SIZE	DWG. NO.
52308	F	02 F001832

SCALE ——— SHEET 15

Drawing M-6

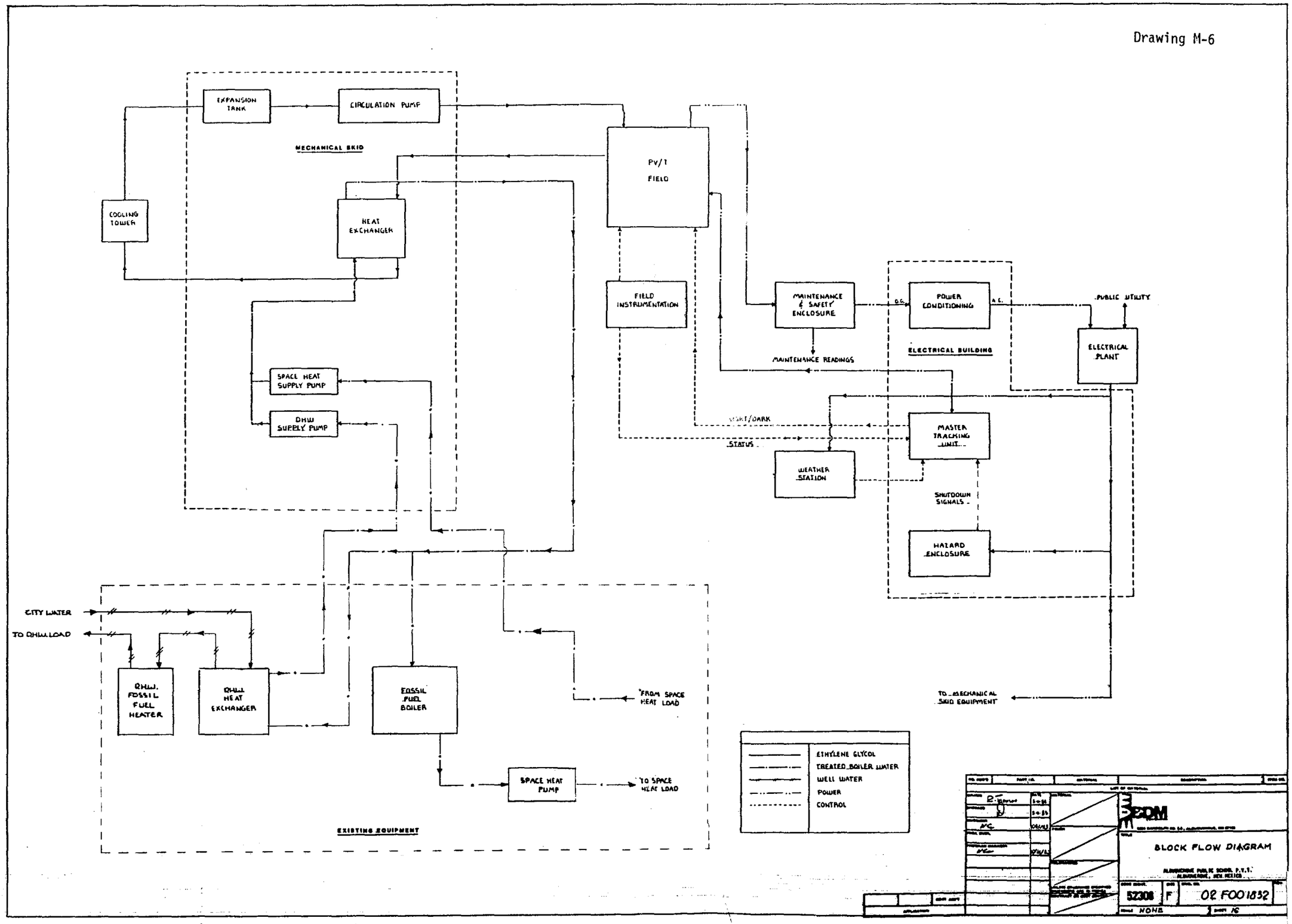
EXPANSION TANK
CIRCULATION PUMP
MECHANICAL SKID
COOLING TOWER
HEAT EXCHANGER
PV/T FIELD
FIELD INSTRUMENTATION
MAINTENANCE & SAFETY ENCLOSURE
D.C.
POWER CONDITIONING
A.C.
PUBLIC UTILITY
ELECTRICAL PLANT
ELECTRICAL BUILDING
MAINTENANCE READINGS
SPACE HEAT SUPPLY PUMP
DHW SUPPLY PUMP
LIGHT/DARK
STATUS
MASTER TRACKING UNIT
WEATHER STATION
SHUTDOWN SIGNALS
HAZARD ENCLOSURE
TO MECHANICAL SKID EQUIPMENT
CITY WATER
TO DHW LOAD
DHW FOSSIL FUEL HEATER
DHW HEAT EXCHANGER
FOSSIL FUEL BOILER
FROM SPACE HEAT LOAD
SPACE HEAT PUMP
TO SPACE HEAT LOAD
EXISTING EQUIPMENT
ETHYLENE GLYCOL
TREATED BOILER WATER
WELL WATER
POWER
CONTROL
BLOCK FLOW DIAGRAM
ALBUQUERQUE PUBLIC SCHOOL P.T.T.
ALBUQUERQUE, NEW MEXICO
52308
F
02 F001832
NONE

CHAPTER IV
FRESNO, CALIFORNIA HOSPITAL

A. INTRODUCTION

1. Plant Description

The Fresno, California hospital consists of derived characteristics based on "typical" hospitals and a derived load profile for space heating and domestic hot water loads. The hospital is a four-story, 128,000-ft^2 (39014 m^2) building defined as "typical" in reference III-8 of volume I. Other characteristics of the building and the load profiles are given in volume I.

The flow schematic in figure IV-1 shows a single large boiler used to provide space heat, domestic hot water, and a small amount of additional hot water or flashed steam for kitchen use or sterilization. In this instance the boiler operates continuously to provide a small DHW load during the summer when space heat is turned off. For the hospital modeled using SOLCEL the flow rate through DHW is 5.7 gpm ($3.6 \times 10^{-4} m^3$/sec or 0.35 kg/sec) and the flow rate through the space heating system is 46.7 gpm (2.9×10^{-3} m^3/sec or 2.86 kg/sec). The fossil boiler (or auxiliary heater) is maintained at 30 psig (0.31 MPa) to produce hot water at a temperature of about 102 to 110°C (215 to 230°F.)

The usual daytime load consists of only DHW. The space heating load occurs only at night and occasionally in very late afternoon. The hospital HVAC system is a closed-loop system in which the water returning from the space heat and DHW loads is mixed with makeup water in the condensate tank and returned to the boiler. This may be compared to the Dixon plant which is an open-loop system where the hot water is discarded after use.

2. Design Trade-Off Studies

Based on the analysis performed for the Dixon meat-packing plant, the row length and flow rate per row were specified as nine arrays

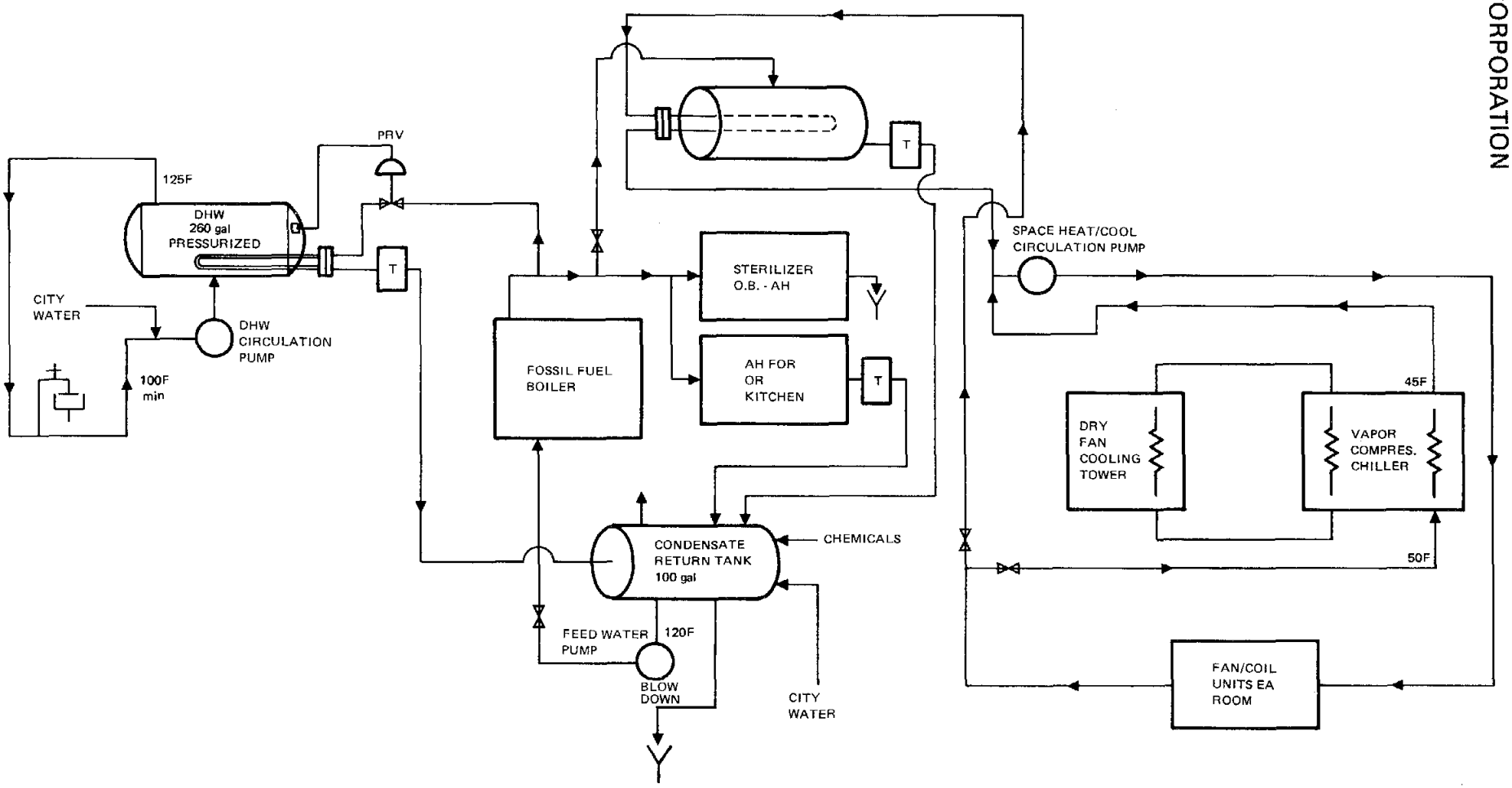

BDM/A-82-458-TR-R1

Figure IV-1. Hospital Flow Schematic

per row and 5 gpm (3.2×10^{-4} m^3/sec), respectively. As indicated in the Dixon plant discussion, longer row lengths required lower flow rates to meet the pressure limitations of the PV-T system. However, lower flow rates and longer row lengths would cause excessive receiver temperatures and voltage mismatch losses. Since the longest row possible would minimize the cost of drive pylons and associated tracking systems, nine arrays per row was selected as near optimum, as well as providing the required voltage and power.

Commercial systems, including the hospital's, are closed-loop systems. Initial studies with a variable volume thermal storage tank in series with the load (as shown for the Dixon plant in figure II-5) indicated that storage never became adequately charged, and the return temperature from the load was often too high for proper PV-T operation. That is, during the day the space heat load was so small that the energy delivered back to the PV-T system was almost as great as the energy available. Thus, the series storage configuration did not improve the LCCR over that with no storage.

A constant volume parallel configuration was then analyzed in which the storage tank was placed in parallel with the load. In this configuration, storage could be charged during the day, while the load was being augmented by PV-T, and discharged at night. However, this involved performing a trade-off study between storage volume and the flow rate through the storage tank.

The results of several simulations are shown in figures IV-2 through IV-4. These results indicate an optimum field size of 10 rows, with nine LFF arrays per row, and a storage volume of 68 m^3. The optimum flow rate through storage is 3.3 m^3/sec or 3.2 kg/sec, which is the sum of the DHW and space heat flow rates of 5.7 gpm (0.35 kg/sec) and 46.7 gpm (2.87 kg/sec) respectively. For these studies the storage tank was assumed fully mixed and the temperature was monitored. If the outlet temperature of the heat exchanger on the load side was less than the temperature of storage, the flow into storage was turned off and only the load flow was passed through the heat exchanger. This seldom occurred;

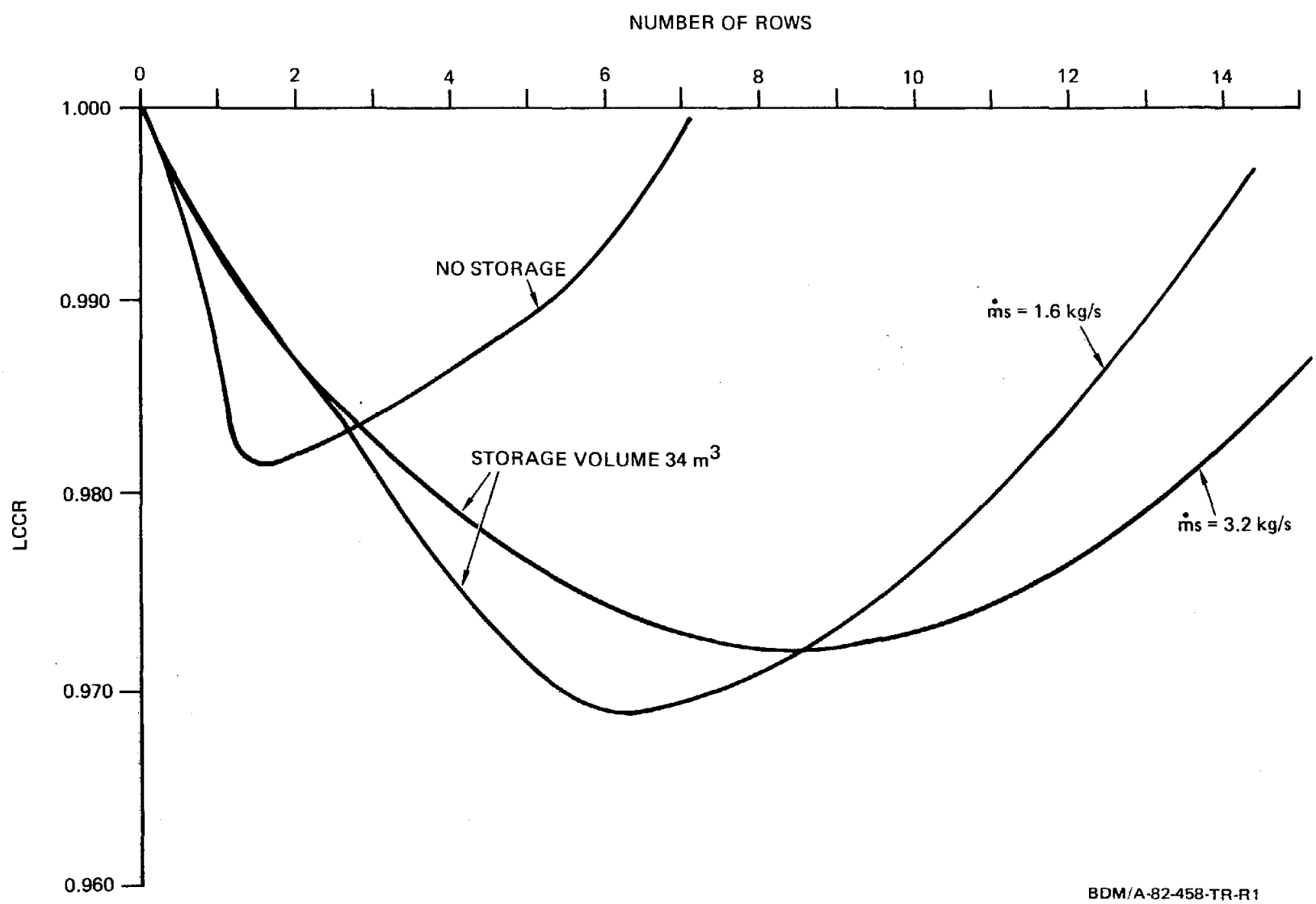

Figure IV-2. Array Size Versus LCCR for Various Flow Rates through Storage ($\dot{m}s$) and a Storage Volume of 34 m^3 (Row Length is 9 LFF Arrays/Row)

"Use or disclosure of proposal data is subject to the restriction on the Title page of this Proposal." (1966 DEC)

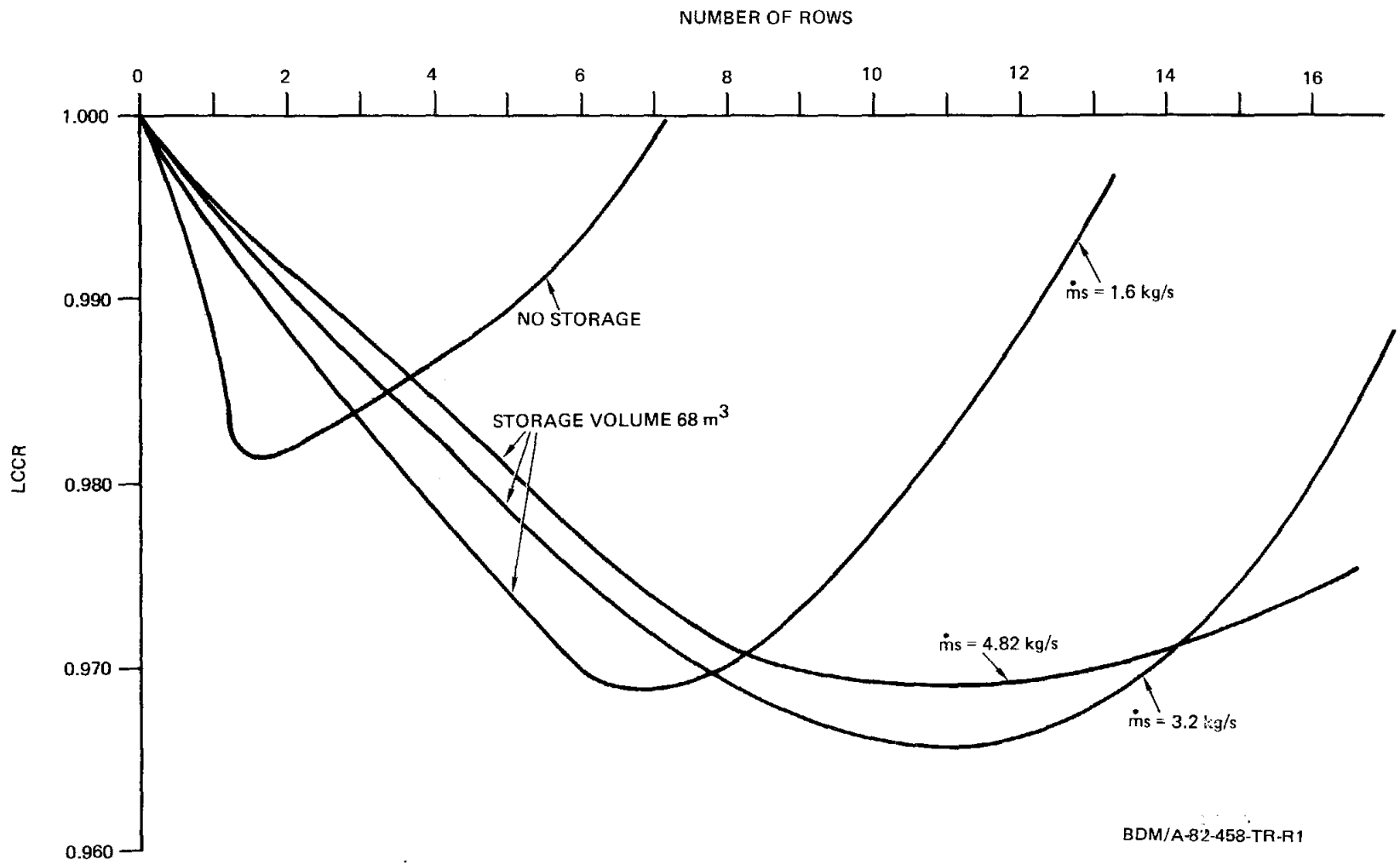

Figure IV-3. Array Size Versus LCCR for Various Flow Rates through Storage ($\dot{m}s$) and a Storage Volume of 68 m^3 (Row Length is 9 LFF Arrays/Row)

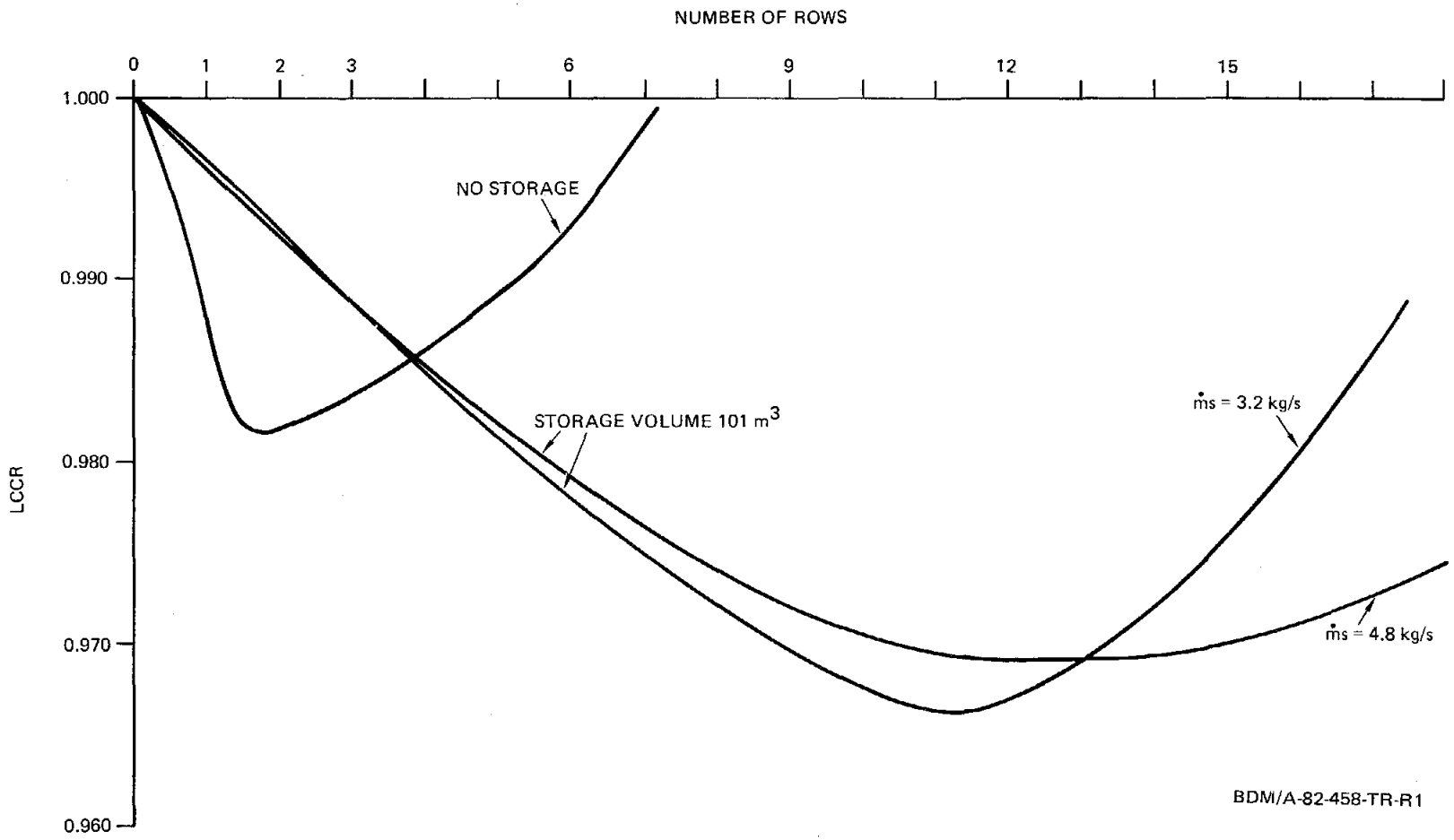

Figure IV-4. Array Size Versus LCCR for Various Flow Rates through Storage ($\dot{m}s$) and a Storage Volume of 101 m^3 (Row Length is 9 LFF Arrays/Row)

the most common operating condition was for storage to be charged and DHW to be supplied during the day so that the typical flow through the load side of the heat exchanger was 58.1 gpm (3.7×10^{-3} m^3/sec or 3.57 kg/sec). At night, the storage tank was discharged into the DHW and space heating load which was significant on winter nights (see volume I, figures III-4 and III-5).

The cost of storage was calculated using the same relation used for the Dixon plant.

3. Generalized Design Concept

The system conceptual design is shown in figure IV-5. Parasitic electrical power associated with the pumps, cooling tower, and PV-T tracking system is added to the existing electrical load. The thermal portion of the PV-T system is interfaced to the existing plant at the condensate tank. If the heat exchanger outlet temperature (TOL) is less than the condensate return, the flow bypasses the PV-T system and goes directly to the boiler. Otherwise, the flow from the boiler feedwater pump is augmented by the augmentation pumps and combined with the flow from storage to pass through the heat exchanger. The flow then splits to charge storage and to supply the boiler. Since the thermal load requires temperatures of 215 to 230°F (102 to 110°C), and since the PV-T system is limited to 210°F (98.9°C), the system always acts as a preheater for the boiler. At night the storage circulation pump is turned off and storage is discharged to the boiler.

If the array outlet temperature is greater than 210°F (98.9°C) the flow is routed through the cooling tower to decrease the array inlet temperature. The flow rate through the array field is constant at 50 gpm (3.3 kg/sec or 3.2×10^{-3} m^3/sec). The flow through the load side of the heat exchanger varies depending on the load requirements and whether storage is charged. There are three flow requirements: 5.7 gpm (3.6×10^{-4} m^3/sec) for DHW, 46.7 gpm (2.9×10^{-3} m^3/sec) for space heat, and 52.4 gpm (3.3×10^{-3} m^3/sec) for storage. The flow through the heat exchanger may be any combination of these three but is usually 58.1 gpm (3.7×10^{-3} m^3/sec), a combination of DHW and storage requirements.

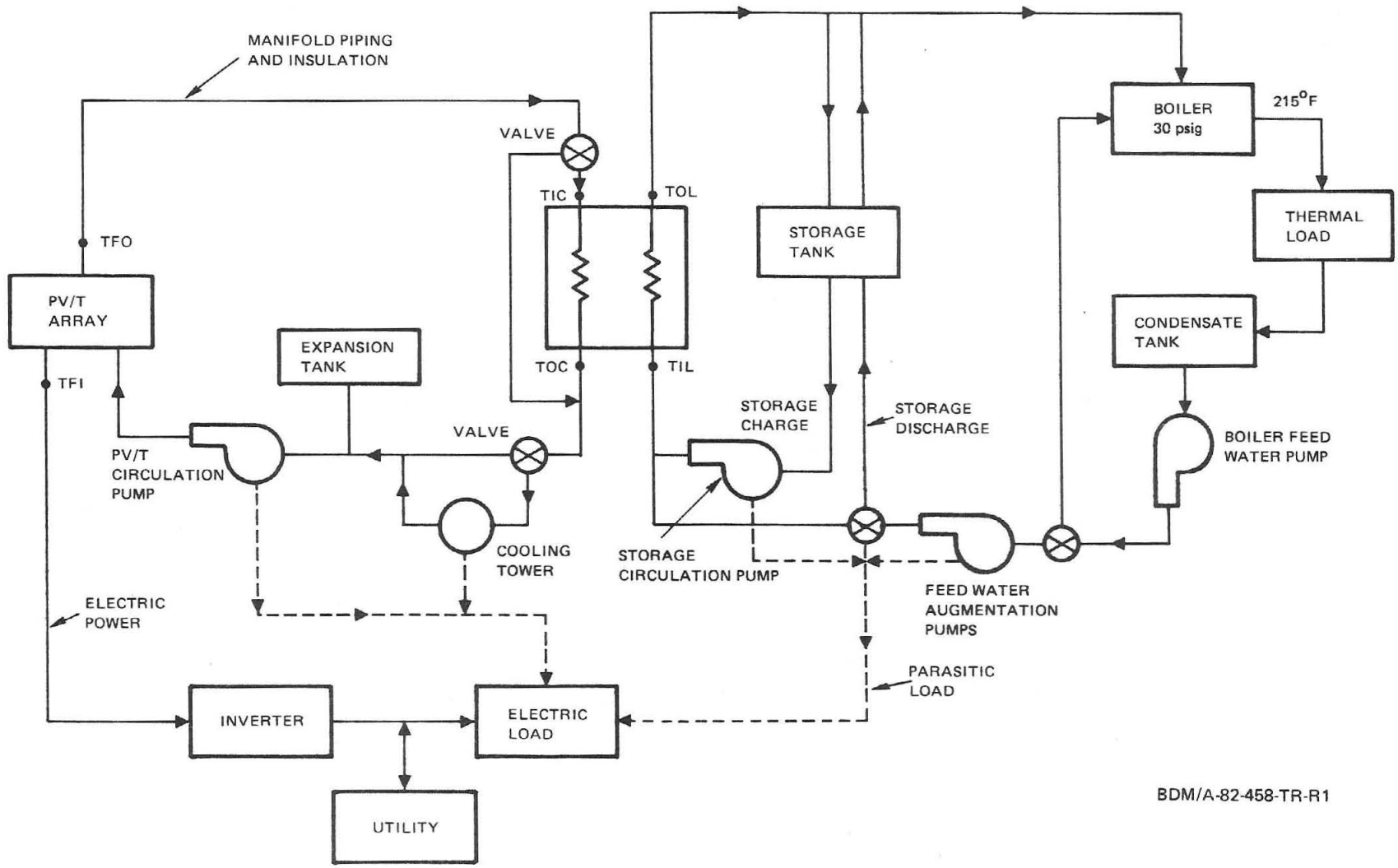

Figure IV-5. Overall Conceptual Design for the Fresno, California Hospital

The SOLCEL simulations indicate the annual electrical and thermal energy characteristics of the system as shown in table IV-1. The system electrical efficiency (energy provided to the load, parasitics, and sell-back versus available insolation) is 10 percent. The system thermal efficiency (energy provided to the load versus insolation) is 22 percent.

In the following sections a detailed system design is provided along with the analyses used to design the system and choose and size components. Although the sections have been divided into electrical and mechanical design, several iterations were performed to determine the proper row length based on voltage and current requirements, temperature increases, and voltage mismatch losses due to the temperature increase along a row. These trade-offs should become clear in the following sections.

B. FRESNO HOSPITAL PV-T SYSTEM ELECTRICAL DESIGN

The following sections summarize the PV-T system electrical design. The text is keyed to the electrical drawings E-1 through E-6 which are contained at the end of this chapter. Since the Fresno hospital PV-T system is very similar to the Albuquerque public school PV-T system, the design will not be described in detail here; rather, only electrical system overview and the differences from the Albuquerque public school's system will be presented.

1. Electrical System Overview

The electrical portion of the Fresno hospital PV-T system is called the photovoltaic power system (PPS). A block diagram of the PPS is shown in drawing E-1. The DC output of the PV system is rated as 126.3 kW (248.7 V and 508 A) at 1000 W/m^2 with an inlet fluid temperature of 25°C and a temperature rise from inlet to outlet of 42°C. The expected AC output of the system is 111.2 kW assuming an overall power processing efficiency of 88 percent. The PPS operates interactively with the electric utility service to the hospital. The output voltage is

TABLE IV-1. FRESNO, HOSPITAL ANNUAL INSOLATION, ELECTRICAL AND THERMAL ENERGY CHARACTERISTICS

INSOLATION (kW-hrs)	
Total Direct Normal Radiation Available	2.38×10^6
ELECTRICAL CHARACTERISTICS (kW-hrs)	
Electrical Load	1.76×10^6
Total Array DC Electrical Energy	2.64×10^5
Array AC Electrical Energy to Load	2.21×10^5
Backup AC Energy to Load	1.54×10^6
Electrical Parasitic	1.68×10^4
Sold Back AC Energy	5.38×10^2
THERMAL CHARACTERISTICS (kW-hrs)	
Thermal Load	2.15×10^6
Total Array Thermal Energy	1.22×10^6
Array Thermal Energy Directly to Load	1.81×10^5
Array Thermal Energy to Storage	3.43×10^5
Stored Thermal Energy to Load	3.42×10^5
Backup Thermal Energy	1.62×10^6
Heat Rejected at Cooling Tower	6.94×10^5
Load Displacement and Efficiencies	
Percent of Electrical Load Displaced	13 %
Percent of AC Electrical Energy Sold Back	0.2 %
System Conversion Efficiency (DC to AC)	90 %
Array Electrical Efficiency	10 %
Percent of Thermal Load Displaced	24 %
System Thermal Efficiency	22 %

227/480-VAC, three-phase, four-wire. The elements in the block diagram will be described briefly.

More detailed discussions of components which differ from the Albuquerque public school system will be presented in subsequent sections. Critical electrical components are specified on the appropriate drawings and summarized in table IV-2.

The DC portion of the PPS, called the PV field, consists of 10 rows of PV arrays divided into two subfields. Each subfield consists of five electrical rows and a subfield maintenance and safety (M&S) enclosure. Each electrical row contains nine E-Systems linear Fresnel lens arrays. (The term array is used by E-Systems to describe a single Fresnel assembly supporting four linear Fresnel lens collectors. Therefore, we have also followed this nomenclature and have defined the total number of arrays interfacing with an inverter as a field.) Each subfield M&S enclosure includes an externally mounted safety switch which provides for interconnection of the five electrical rows, measurement of electrical row parameters, isolation of the subfields and of the individual rows and protection from lightning and other transients.

Two sets of DC field cables are routed to the electrical control building where they are connected through separate safety switches to the inverter. The 125-kW inverter converts the DC power into 277/480-VAC, three-phase, four-wire, 60-Hz power. The inverter also contains DC and AC monitoring and protection switchgear. The AC output of the inverter is routed through the PPS AC circuit breaker to the hospital building. In the building, the PPS power is interconnected through a circuit breaker to the main AC panelboard which supplies the building loads and also the AC power for the PPS. A meter is provided between the utility interface switch and the main AC panelboard to measure the total power required by the hospital building and the PPS. The main AC panelboard indicated in the drawing is part of the standard building equipment. The public utility enters the hospital building through two meters. The meters are connected in opposite directions to measure the flow out of and into the utility. The utility service is also routed to the main AC panelboard.

TABLE IV-2. MAJOR PPS ELECTRICAL COMPONENTS

ITEM NO.	SUBSYSTEM/ITEM DESCRIPTION	(MFR.) PART NO.	QTY.
1.0	Subfield Maintenance and Safety Enclosure NEMA 3R Enclosure (48"H x 36"W x 18"D)		2
1.1	Resistor, 98 kΩ, 1 W, 1%	(Dale) WWA-41B	10
1.2	Resistor, 2 kΩ, 0.1 W, 1%	(Dale) EMF-50-10	10
1.3	Resistor, 0.01 Ω, 50 W, 1%	(Dale) RH-50	10
1.4	Safety Switch, 2 Pole, 600 VDC, 60 A	(Square D) HU-262	10
1.5	Varistor, 420 V	(GE) V320-3A-40A	30
1.6	Blocking Diode, 1200 V, 70 A	(IR) IRKE71-12	30
1.7	Busbar, 400		4
2.0	Subfield Maintenance Switch/Safety Switch, 2 Pole, 600 VDC, 400 A Fusible Outdoor	(Square D) H-265R	2
3.0	Subfield Disconnect Safety Switch 2 Pole, 600 VDC, 400 A	HU-265	2
4.0	DC-AC Inverter, 125 W, 480 VAC, 3 Phase, 4 Wire	(DECC)	1
5.0	Circuit Breaker, 480 VAC, 3 Phase, 175 A	(Square D) KAE 36175S	2
6.0	Service Transformer, 480/120 V, Single Phase, 50 kVA Outdoor Type	(SORGEL) 5053H	1

TABLE IV-2. MAJOR PPS ELECTRICAL COMPONENTS (Concluded)

ITEM NO.	SUBSYSTEM/ITEM DESCRIPTION	(MFR.) PART NO.	QTY.
7.0	Interruptible Power Supply/Device Generator Set, 45 W with 6-Cylinder 301 cu. in. Engine, 270 A-N, 12 V Lead Acid Batteries, 50 Fuel Tank	(ONAN) 45.0 DYJ-15R	1
8.0	Uninterruptible Power Supply/Inverter, 3 kVA, 120 VAC, 1 Phase Sortie with GEL-CELL Sealed Batteries and Rectifier, 120 VAC to 133 VDC	(Gould) 5247A-1	1
9.0	Master Controller and Hazard Station (Includes Microcomputer and Hazard Relays)	Not Defined	1

The AC power for the PPS is routed to the AC panelboard in the electrical control building. A meter on this line measures the power required by the PPS. The AC power is stepped down as appropriate for the various electrical control building and field power requirements.

2. Field Design

a. Determination of PV-T Field Size and Layout

Sizing trade-off analyses performed using the SOLCEL-II computer code indicated that the lowest life-cycle cost for the system would be obtained using approximately 80 to 100 E-Systems arrays arranged in eight- to 10-array thermal loops with a differential in inlet to outlet fluid temperature of 42°C at 1000 W/m^2.

Using the same rationale that was used for the public school design, the electrical string (row) length was set at nine arrays which will develop 249-V nominal DC voltage. Ten rows are connected in parallel as shown in drawing E-2 resulting in a total of 90 arrays in the field. A 125-kW inverter from DECC will easily handle the 126.3-kW field DC power and will have the same operating voltage window (200 to 290 V) as the 100-kW inverter in the Albuquerque public school design.

Since the Fresno climate is more temperate than that of Albuquerque, with higher winter temperatures, the voltage variations previously shown in table III-2 and figure III-4 should easily encompass the Fresno conditions. The high temperature/low voltage results should be the same while the low temperature/high voltage results would not be as extreme for Fresno.

b. Determination of Subfield Size

The rationale for the subfield size for the Fresno hospital system is the same as that for the public school system, resulting in two electrical subfields. In the Fresno hospital system, however, each subfield consists of five rows instead of four rows since there are 10 rows altogether in the field.

3. DC Switchgear and Wiring

The Fresno hospital DC switchgear and wiring are very similar to that for the Albuquerque school system with the exception that the

subfield M&S enclosures shown in drawing E-3 accommodate five electrical rows or strings instead of four. Thus, there are five row protection and monitoring circuits and the paralleling busbar will have six terminals instead of five.

4. Inverter

The same rationale for inverter selection used for the Albuquerque school design can be applied to the Fresno hospital design. The Fresno hospital does require a higher power inverter, 125 kW instead of 100 kW. However, the same basic inverter cabinet can handle from 75 to 150 kW, as noted in the Albuquerque public school inverter section. Therefore, the 125-kW unit can be supplied with the same cabinet and the same specifications as the 100-kW unit described in the school inverter section.

5. AC Power Distribution System

An AC one-line diagram for the Fresno hospital PV-T system is shown in drawing E-4. The design is essentially the same as that for the Albuquerque public school PV-T system with the following exceptions:

(1) The inverter is a 125-kW unit instead of a 100-kW unit.

(2) The AC circuit breaker is rated for 175 A instead of 150 A.

All other components and design features are the same as for the school system.

6. Control Systems

The control systems design considerations for the Fresno hospital PV-T system are the same as those for the Albuquerque public school system. The two extra trackers in the Fresno hospital system can easily be handled within the framework of the conceptual design.

7. Auxiliary Power Systems

The auxiliary power systems for the Fresno hospital PV-T system consist of the same interruptible and uninterruptible power supply (IPS and UPS) units used in the school design. The 25-percent higher emergency stowing power required is only part of the IPS load and can easily be supplied by the 45-kW IPS. The power requirements for the UPS are the same as in the Albuquerque public school system. The auxiliary power systems are shown on the AC one-line diagram, drawing E-4.

8. Electrical Control Building Design

The electrical control building (ECB) for the Fresno hospital is shown in drawing E-5. The ECB design rationale, the structure, foundation, and equipment arrangement are all the same as for the Albuquerque public school system. The only difference is that the air-conditioning for the ECB consists of simply a lowered wall fan instead of the evaporative cooler used in the school ECB. Because of the lower altitude and lower direct normal insolation in Fresno compared with Albuquerque, it was felt that active cooling was not required for this system. In addition, the evaporative cooler would not be as effective in Fresno because of the higher humidity. It should be noted also that the McClellan AFB 40-kW FPUP system constructed by BDM near Sacramento, California also uses an exhaust fan in lieu of active cooling. Since this is a larger system, however, this issue should be revisited if the system is chosen for construction.

9. Protection and Grounding

The safety and protection design for the Fresno hospital system is the same as that for the Albuquerque public school system's. The only difference is in the ground counterpoise system diagrammed in drawing E-6. Because the Fresno hospital system has two more rows of arrays, the counterpoise contains an extra section at the south end of the field to encompass these two extra rows. All other details are the same as for the school system.

C. DETAILED MECHANICAL SYSTEM DESIGN

1. Constraints for Mechanical Design

The PV-T system designed for the Fresno, California hospital is shown on P&ID drawing M-3, and the P&ID specifications are given in table IV-3. The design methodology for the system resulted from several fixed constraints based on the load requirements and system simulations. These include the following:

(1) E-Systems line focus Fresnel collectors

(2) Row to row spacing--2 apertures

TABLE IV-3. FRESNO HOSPITAL
P+ID SPECIFICATIONS

WATER (LOAD) SIDE

SYMBOL	DESCRIPTION	SIZE	CONNECTION	MFG. & PART NO.
BV-11,12	Ball Valve	1"	150#	Worcester 51-44-150
BV 18, 17, 19	Ball Valve	2"	150#	Worcester 51-44-150
CK-2, 8, 10	Check Valve	1"	150#	Crane #4033
CK-3, 4, 6, 7, 9	Check Valve	2"	150#	Crane #147
CP-2	Circulation Pump	3/4" x 3/4"	125#	Gould Model 3333 Series CB Booster Pump Model CB5-18, 3500 rpm
CP-3	Circulation Pump	3" x 1½"	150#	Worthington 1-1/2 LLR-10 Two Stage, Single Suction, Horizontal Split Case, 8" Impeller, 3550 rpm
CP-4	Circulation Pump	3" x 1½"	150#	Worthington 1-1/2 LLR-10 Two Stage, Single Suction, Horizontal Split Case, 8-1/4" Impeller 3550 rpm
FRG-1, 3 4, 5,	Flow Regulator	2"	150#	Taylor Tool #TF-C-2 #1 Set at 52.4 gpm, #3@ 46.7 gpm, #4 @ 52.4 gpm, #5 @ 46.7
FRG-2, 6	Flow Regulator	1"	150#	Taylor Tool #TF-C-2 Set at 5.7 gpm

TABLE IV-3. FRESNO HOSPITAL
P+ID SPECIFICATIONS (Continued)

WATER (LOAD) SIDE

SYMBOL	DESCRIPTION	SIZE	CONECTION	MFG. + PART NO.
MV-3, 4, 5, 6, 12, 14	Motorized Valve	2"	150#	Worcester 51-44-150 with 2075X Activator
MV-8, 11, 13, 7, 15	Motorized Valve	1"	150#	Worcester 51-44-150 with 1075X Actuator
PRV-2	Pressure Relief Valve	2"	NPT	Dresser Industries, Consolidated #1488, Press Set at 15 psig
ST-3	Strainer	1"	150#	Leslie #7201
ST-4, 5	Strainer	2"	150#	Leslie #7201
TST-1	Thermal Storage (3 each)	6000 gal		Ace Buehler Model MCSD9614-G
TT-3, 5,	Temperature Transmitter	1/2"	Threaded	Fisher PM 503 Temperature Transmitter, Thermocouple Type J
TT-4	Temperature Transmitter	1 1/2"	Flanged	Fisher PM 503 Temperature Transmitter with thermo-couple Type J on 4 ft Probe.
VB-1, 2	Vacuum Breaker	3/4"	NPT	Gast, #AA308, Set Press at 2 psid
PRG-1, 2	Pressure Regulator	1"	150#	Jordan 1-1/4" Mark 67 Sliding Gate Pressure Regulator 12-25 psig set to 15 psig
PRG-3	Pressure Regulator	2"	150#	Jordan 2" Mark 67 Sliding Gate Pressure Regulator 12-25 psig set to 15 psig

TABLE IV-3. FRESNO HOSPITAL
P+ID SPECIFICATIONS (Continued)

GLYCOL (FIELD) SIDE

SYMBOL	DESCRIPTION	SIZE	CONNECTION	MFG. & PART NO.
AE-1	Air	2-1/2"	NPT	AMTROL #447
BV-1A through 15, 2A through 25	Ball Valve	1"	150#	Worcester 51-44-150
BV-3, 5, 7	Ball Valve	2-1/2"	150#	Worcester 51-44-150
BV-8, 9, 10, 4, 6	Ball Valve	2"	150#	Worcester 51-44-150
CP-1	Circulation Pump	1-1/2" x 2"	150#	Worthington 1-1/2 LLR-7 3530 rpm, 5.5" Impeller, 200 lb
CT-1	Cooling Tower	4"	150#	Baltimore Aircoil VXI18-1X
ET-1	Expansion Tank	2"	150#	Ace Buehler X18-2, 35 gal, 18" dia x 36" Long, Galvanized Lining
GV-1	Globe Valve	2"	150#	Crane #143
GV-2	Globe Valve	2-1/2"	150#	Crane #143
HX-1	Heat Exchanger	2"	150#	Tranter, #UX-216-UP-45, 304SS Plates, NBR Gaskets
MV-1, 2	Motorized Valve	2-1/2"	150#	Worcester 51-44-150 with 3075X Actuator
PRV-1A thru J	Pressure Relief Valve	1/2"	NPT	Dresser Industries, Consolidated #1488, Press Set at 100 psig
PRV-3	Pressure Relief Valve	2"	NPT	Dresser Industries, Consolidated #1488, Press Set at 5 psig

TABLE IV-3. FRESNO HOSPITAL
P+ID SPECIFICATIONS (Concluded)

GLYCOL (FIELD) SIDE

SYMBOL	DESCRIPTION	SIZE	CONNECTION	MFG. + PART NO.
ST-1	Strainer	2-1/2"	150#	Leslie #7201
ST-2	Strainer	2"	150#	Leslie #7201
TS-1A Thru J	Temperature Switch	1/2"	NPT	Transamerica Delaval Barksdale ML1H-H352-W, Temperature set at 225·F
TS-1	Temperature Switch	1/2"	NPT	Transamerica Delaval Barksdale ML1H-H352-W, Temperature Set at 210°F
TS-2	Temperature Switch	1/2"	NPT	Transamerica Delaval Barksdale ML1H-H352-W Temperature Set at 225°F
V-1A through J	Venturi Flow Meter	1"	Threaded	Gerand, VS-1-406
FS-1A through J	Flow Switch	1"	NPT	Peeco, Type NT, Flow Set at 4 gpm

(3) Total arrays--90

(4) Arrays per delta-T string--9

(5) Total flow rate collector side--50 gpm (33 kg/sec or $3.2 \times \times 10^{-3}$ m^3/sec)

(6) Maximum collector side operational temperature--210°F (98.9°C)

(7) Load side flow rate--58.1 gpm (3.57 kg/sec or 3.7×10^{-3} m^3/sec) average

(8) Load side required temperature--215°F (102°C) minimum

(9) Load side makeup temperature--variable

(10) Thermal storage:

(a) Size--68 m^3

(b) Flow rate--52.4 gpm (3.3×10^{-3} m^3/sec)

2. Field Layout

The solar collector field layout shown in drawing M-1 was chosen to minimize the length of the manifold while remaining within the pressure and temperature limitations of the collectors. The field is fed from one end with cold fluid and hot fluid collected at the opposite end. The mechanical and electrical skid are located at the collection, or hot, end of the field. This minimizes the length of the hot return line and decreases the amount of heat loss from the manifold. Since the manifold piping is above ground, ramps over the piping will be required to allow easy access to the collectors for maintenance and cleaning. Ideally, the plant and equipment skids will be positioned to the north of the field to prevent shading of the collectors.

3. Manifold

The manifold supply and return lines are insulated and above ground supported by pipe guides located every 13 ft (3.96 m). Rigid calcium silicate insulation is used at each support to prevent heat loss through the support, and fiberglass insulation on the remainder of the manifold. Each collector is connected to the manifold with a U-bend in the pipe run. This U-bend serves two purposes: 1) provides a "thermal trap" that prevents hot fluid in the manifold from thermal syphoning to the colder fluid in the collectors when not in operation, and 2) provides flexibility to compensate for axial thermal expansion of the manifold.

The design flow rate is 5 gpm (3.16×10^{-4} m^3/sec) through each delta-T string and 50 gpm (3.3 kg/sec or 3.2×10^{-4} m^3/sec) through the manifold. The pressure drop across each row is given by the empirical relation for E-Systems collectors (equation IV-1).

$$\Delta P = 8.58 \times 10^{-3} G^{1.8} \mu^{0.2} \rho^{0.8} N_c \qquad \text{(Eq. IV-1)}$$

Where:

ΔP = pressure drop, psi

G = flow rate, gpm

μ = fluid viscosity, Cp

ρ = fluid density, lb/ft^3

N_c = number of collectors per row

For 40-percent ethylene glycol/water and an average array temperature of 183°F (90.5°C) (an annual average determined in the SOLCEL simulations), the viscosity is 0.7 Cp (7×10^{-3} Pa·s) and the density is 63.15 lb/ft^3 (1012 kg/m^3). For nine collectors per row the pressure drop is 36 psi (0.25 MPa).

For an edge feed system the manifold length is given by equation IV-2.

$$L_m = \text{(row spacing) (\# from -1) (2)} \qquad \text{(Eq. IV-2)}$$

$$L_m = \text{(20 ft) (10-1) (2) = 360 ft (109.8 m)}$$

The allowable average pressure drop per foot of manifold pipe is determined from equation IV-80, volume II, to be 0.025 psi/ft (565 Pa/m). Referring to figure IV-33 of volume II shows that the manifold piping should be 1-1/2 in (3.81 cm) in diameter for the entire field. To maintain a normal design pressure drop of 1 to 5 ft (.3048 to 1.52 m) of head per 100 ft (30.48 m) of pipe, the feeder line to the field should be 2 in (5.08 cm) in diameter for the constant flow rate of 50 gpm (3.2×10^{-3} m^3/sec). This assumes carbon steel pipe is used throughout.

4. Thermal String (Delta-T String)

There are obvious advantages to having long delta-T strings, (i.e., less manifold piping, less control and maintenance hardware, less drive pylons, etc.). However, these must be traded-off against disadvantages such as excess pressure drop and temperature rise across the rows. The design must also consider the current, voltage and voltage mismatch, and wire sizes for the PV portion of the system. These factors have been discussed in the design of the Dixon plant and in the previous chapter. Based on these trade-offs a row length of nine arrays/row and a flow rate of 5 gpm (3.2×10^{-4} m^3/sec) per row were chosen.

5. Expansion Tank (ET-1)

The collector loop requires an expansion tank to accommodate the volumetric thermal expansion of the ethylene glycol/water mixture when it is heated to a maximum operating temperature of 210°F (98.9°C). Otherwise, the system would build up high pressure causing leaks, failures, and possibly injuries. In order to size the expansion tank (ET-1), a rough idea of the volume of the system is required. Consider the sketch in figure IV-6 and table IV-4.

For a 40-percent ethylene glycol/water solution, the volumetric thermal expansion is:

$$\frac{P_T = 68^oF}{P_T = 212^oF} = \frac{1.051}{1.000} = 1.051$$

Then:

$$(281 \text{ gal})\ (1.051) = \begin{array}{r} 295 \\ -281 \\ \hline 14 \end{array} \text{ gallons } (0.053 m^3)$$

Then the system will increase in volume by 14 gallons (0.053 m^3) when it is operating between 68°F (20°C) and 212°F (100°C). The ET-1 will be sized such that when the system is cold it will be one-fourth full, and

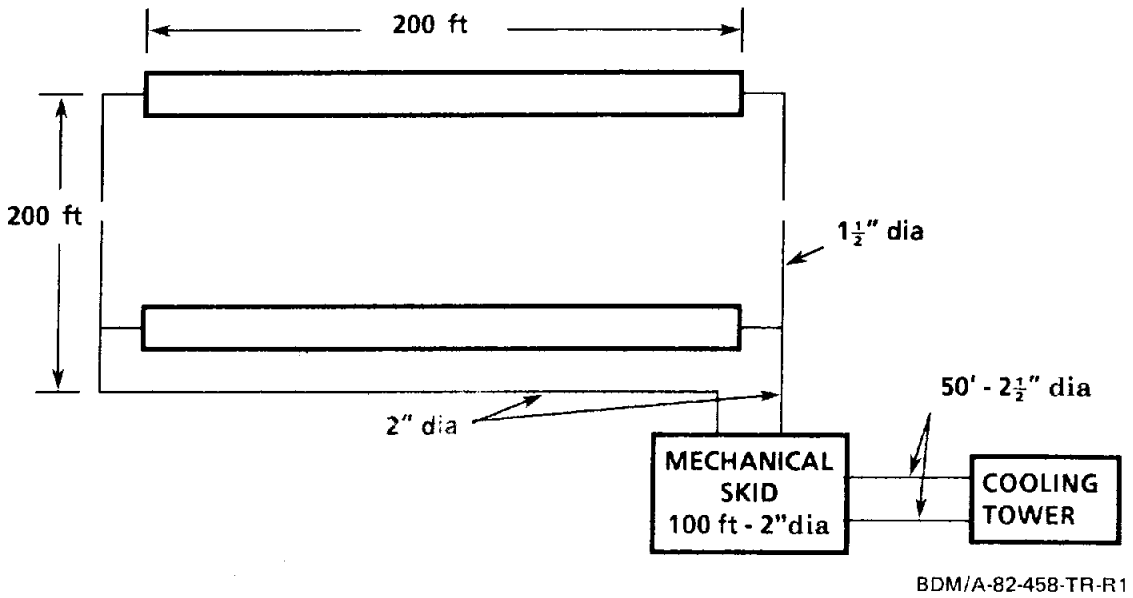

Figure IV-6. Piping Schematic

TABLE IV-4. FLUID VOLUME INVENTORY

PIPE	ft/RUN	DIAM	gal/ft	# OF RUNS	gals
Collectors	73	3/4	0.023	90	151
Manifold	200	1-1/2	0.106	2	42
Collector/Skid	220	2	0.174	1	38
Skid	100	2-1/2	0.249	1	25
Skid/CT	50	2-1/2	0.249	2	25
					281 gal (1.06 m^3)

three-fourths full when the system is hot. Thus, the tank size should be 28 gallons (0.106 m^3). An Ace-Buehler tank model X-18-15 is chosen. This tank is 18 in (45.7 cm) in diameter, 30 in (76.20 cm) long with a 30-gallon (0.114 m^3) capacity. The inside surface should be galvanized. A pressure relief valve, set for 5 psid (0.14 MPa), should be used to prevent excess pressure buildup in the tank, and a vacuum breaker set to 2 psid (13.8 KPa) to prevent tank collapse during system cooldown. The tank should be elevated above the pump as high as is practical to reduce the possibility of cavitation at the pump and to allow feeding through the pump during system filling procedures.

6. Cooling Tower

After having a basic idea of the system configuration, SOLCEL runs were made and the maximum heat rate from the collectors was found to be 1.8 x 10^6 Btu/hr (527.4 kW). Assuming the system is to be run even if the thermal side is shut down (i.e., for maintenance), then the cooling tower must be sized to reject 1.8 x 10^6 Btu/hr (527.4 kW) to maintain the collector output below 210°F (98.9°C). The delta-T across the cooling tower is:

$$\Delta T = \frac{Q}{\dot{m}C_p} = \frac{1.8 \times 10^6 \text{ Btu/hr}}{6.03 \frac{\text{Btu}}{\text{sec}^\circ\text{F}} (3600 \text{ sec/hr})} = 82.9^\circ\text{F } (46.1^\circ\text{C})$$

Then the maximum collector inlet temperature is:

$$T_{a,i} = 210 - 83 = 127^\circ\text{F } (52.8^\circ\text{C})$$

The approach is defined as the leaving fluid temperature minus the design wet bulb temperature (71°F (22°C) typical for Fresno, California).

$$T_{app} = 127 - 71 = 56^\circ\text{F } (31.1^\circ\text{C})$$

In order to maintain the inlet to the CT at 180°F (82°C) or less when the collector reaches 210°F (98.9°C), the flow rate through the CT must be increased as shown in figure IV-7. The 180°F (82°C) limitation was described in the Dixon plant design section.

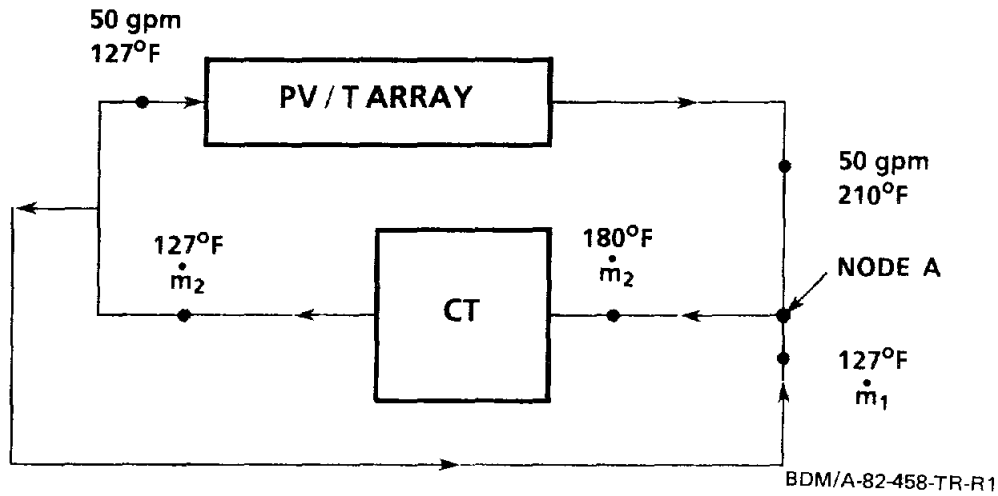

Figure IV-7. Cooling Tower Conditions

To find $\dot{m}_2$, an energy and mass balance is performed at node A.

$$\dot{m}_1(127) + (50)(210) = \dot{m}_2(180)$$

$$\dot{m}_1 + 50 = \dot{m}_2$$

$$\dot{m}_2 = 78.3 \text{ gpm } (4.9 \times 10^{-3} \text{ m}^3/\text{sec})$$

$$\dot{m}_1 = 28.3 \text{ gpm } (1.8 \times 10^{-3} \text{ m}^3/\text{sec})$$

Then, the following parameters apply:

(1) Range = 180 - 127 = 53°F (29.4°C)

(2) Approach = 56°F (31.1°C)

(3) Design wet bulb = 71°F (22°C)

(4) Design flow rate = 78.3 gpm (4.9×10^{-3} m^3/sec)

(5) HTF = 40-percent ethylene glycol/water

Using the BAC catalogue, the performance factor is between 7 and 7.5 so that a VXMI 18-3 industrial cooler is chosen with a multistage axial fan and low horsepower option. The pressure drop in this unit is (0.6)(1.052) = 0.63 psi (4344 Pa). It's characteristics are:

Fan motor power = 5 hp (3.73 kW) at 11,600 CFM (5.5 m^3/sec)
Pump motor power = 1/2 hp (0.373 kW) at 75 gpm (4.7×10^{-3} m^3/sec)
Operating weight = 3830 lbs (1737 kg)

7. Heat Exchanger (HX-1)

The HX is required to separate the potable water on the load side from the nonpotable ethylene glycol on the collector side. Code requires that a double wall HX be used. However, a plate and frame HX serves the same purpose (see figure II-14). If a leak in the gaskets should occur, with a plate HX, neither fluid would mix with each other but would drain to the environment. This prevents cross-contamination of the fluids. A plate HX also has a more effective method of heat transfer due to the high turbulence allowing approach temperatures to be less than 5°F (2.8°C). The HX is sized to transfer the maximum energy possible from the collectors to the load while maintaining the collector outlet temperature at the maximum of 210°F (98.9°C).

The peak useful heat output of the array is 523 W/m^2 at an insolation level of 980 W/m^2. This converts to a peak heat rate of 1.8×10^6 Btu/hr (527.4 kW). The array side flow rate is 50 gpm (3.2 m^3/sec), and the capacity rate is $W_a = (\dot{m}C_p)_a$ = 6.03 Btu/sec °F (11.5 kW/°C) at an average array temperature of (183°F) 90.5°C .

The load side flow rate varies depending on the load and whether or not storage is full. The minimum flow rate occurs when storage is full and the space heating load is zero; for this case the only load is DHW and the flow rate is 3.6×10^{-4} m^3/sec. When there is space heating and storage is charging, then the maximum flow rate is

104.6 gpm (6.6×10^{-3} m^3/sec). Both these cases are unusual. The most common situation is DHW load and storage being charged with a constant flow rate of 52.3 gpm (3.3×10^{-3} m^3/sec) for a total flow rate through the HX of 58 gpm (3.66×10^{-3} m^3/sec). This gives an average load side capacity rate of 7.85 Btu/sec °F (14.9 kW/°C).

The maximum load side temperature to the heat exchanger is 202°F (94.2°C), the minimum load side temperature is 110°F (44°C), and the yearly average is 178°F (80.1°C). This inlet flow to the heat exchange on the load side ($T_{c,i}$) consists of the return from the load and the flow through storage. Therefore, the temperature depends on the load return temperature and storage temperature.

At these flow rates, and assuming an average inlet temperature to the heat exchanger of 178°F (80.1°C), it is impossible to transfer 1.8×10^6 Btu/hr (527.4 kW) from the collector side of the HX to the load side. Therefore, the heat exchanger is sized to transfer the maximum amount of energy from the array side under average flow conditions on the load side in order to minimize operations of the cooling tower. Using the conditions shown in figure IV-8, the heat exchanger effectiveness is:

$$\varepsilon = \frac{W_a\ (T_{h,i} - T_{h,o})}{W_{min}\ (T_{h,i} - T_{c,i})} = \frac{210 - 180}{210 - 178} = 0.9375$$

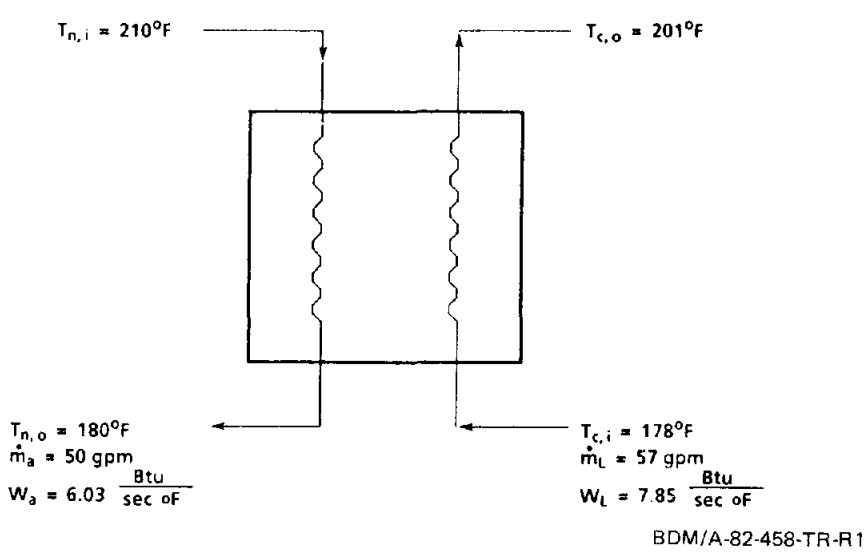

Figure IV-8. Heat Exchanger Design Conditions

$$\varepsilon = 0.9375 = \frac{W_L(T_{c,o} - T_{c,i})}{W_{min}\ (T_{h,i} - T_{c,i})} = \frac{7.85\ (T_{c,o} - 178)}{6.06\ (210 - 178)}$$

$T_{c,o} = 201^oF\ (93.9^oC)$

And the average heat transferred to the load is:

$$Q_{hx} = W_a\ (T_{h,i} - T_{h,o}) = (6.03)\ (3600)\ (210 - 180) = 6.51 \times 10^5 \text{ Btu/hr}$$
$$(190.7 \text{ kW})$$

The number of transfer units is:

$$NTU = \frac{1}{1 - \frac{6.06}{7.85}} \ln \left[\frac{1 - (0.9375)\left(\frac{6.06}{7.85}\right)}{1 - 0.9375} \right] = 6.47$$

Assuming an overall heat transfer coefficient of 800 Btu/hr $ft^2{}^oF$ (4542 $W/m^2\ {}^oC$), the area is:

$$A = \frac{(W_{min})\ NTU}{U} = \frac{(6.03\ \frac{Btu}{sec\ {}^oF.})\ (3600\ \frac{sec}{hr})\ (6.47)}{(800 \text{ Btu/hr ft}^2{}^oF)} = 176\ ft^2$$
$$(164\ m^2)$$

Cost of the heat exchanger is about $4000.

Using Tranters model UX-216 plate which is 4 ft^2 (1.22 m^2), the total numbers of plates is 45 with 22 parallel flow channels in a single pass configuration.

8. Thermal Storage

The thermal storage tank is a 18,000 gallon (68 m^3) tank as determined from the SOLCEL simulations. An inground storage system as used in the Dixon design would require a pit 33 ft (10.06 m) on a side

and 5.5 ft (1.68 m) deep (the recommended slop to the sides is 2.5 to 1). For a hospital application the land area used for the solar system should be minimized; therefore, a metal water storage tank system was designed.

This system, shown in figure IV-9, consists of three 6,000-gallon (22.7 m^3) steel tanks. Three tanks were chosen because: 1) a 6,000 gallon (22.7 m^3) tank is a standard size and three can be purchased less expensively than a specially fabricated 18,000-gallon (68 m^3) tank, and 2) multiple tanks improve stratification of the thermal storage liquid. The tanks are unpressurized steel tanks with glass-coated interiors to prevent corrosion.

The inlet openings to the tanks are in a horizontal plane allowing the fluid to enter the tank without mixing with fluid above or below the inlet. The inlets have been sized to reduce the velocity of the fluid entering the tank to about 2 ft/sec (0.61 m/sec), and the piping has been designed to allow maximum use of the storage volume. Provisions have been made for drainage and for manholes to allow for inspection and maintenance of the interior coating. Vacuum breakers have been provided to prevent tanks from imploding under possible negative pressures, and pressure relief valves are vented to a drain.

The three tanks are located in an insulated enclosure 25 ft x 23 ft x 18 ft (7.62 x 7.01 x 5.49 m) as shown in figure IV-9. The storage tanks are Ace Buehler model number MCSD9614-G.

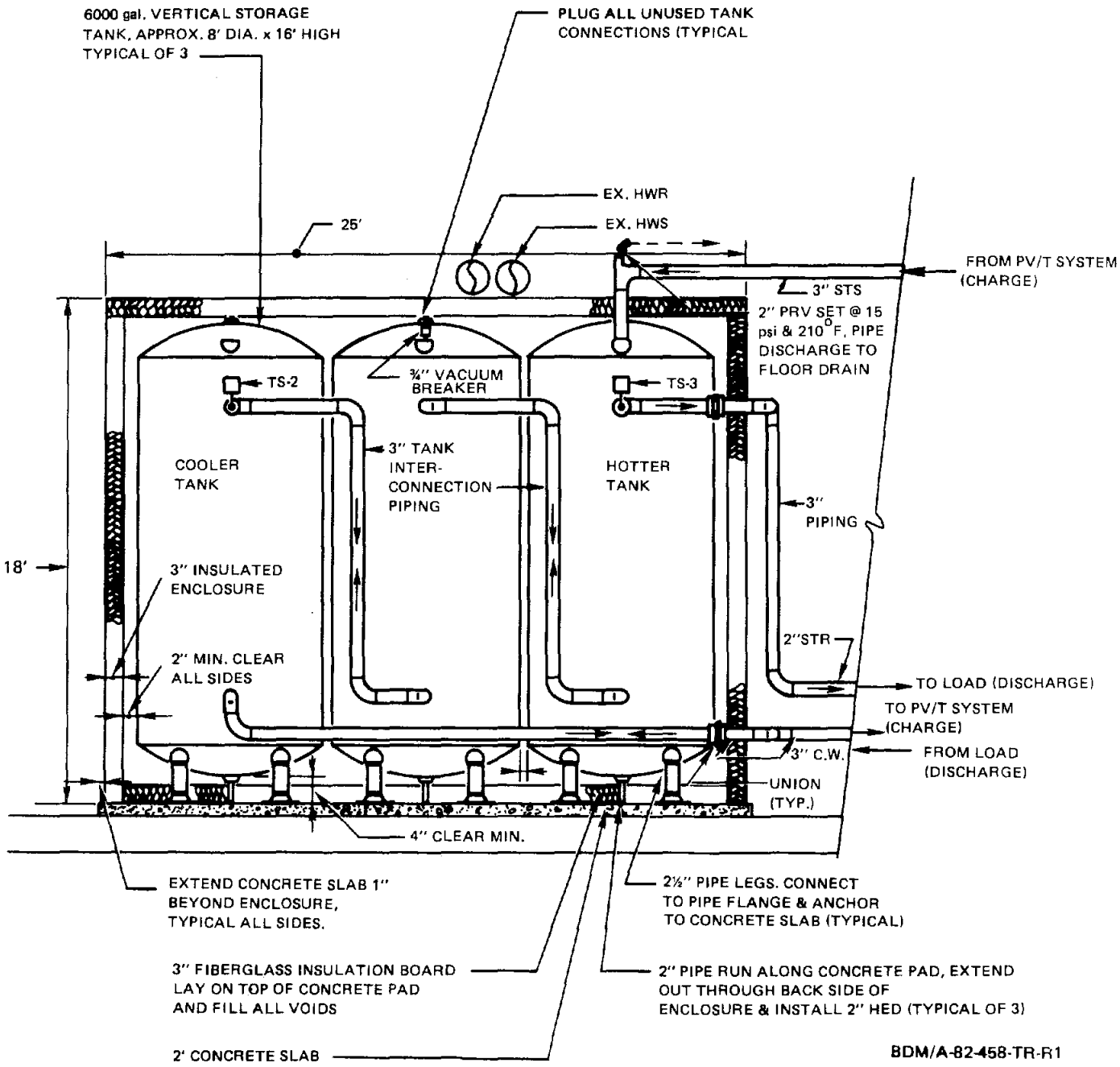

Figure IV-9. Storage Tank Configuration for Fresno, California Hospital

9. Load Side Pump Sizing

The basic flow system on the load side for daytime operation is shown in figure IV-10.

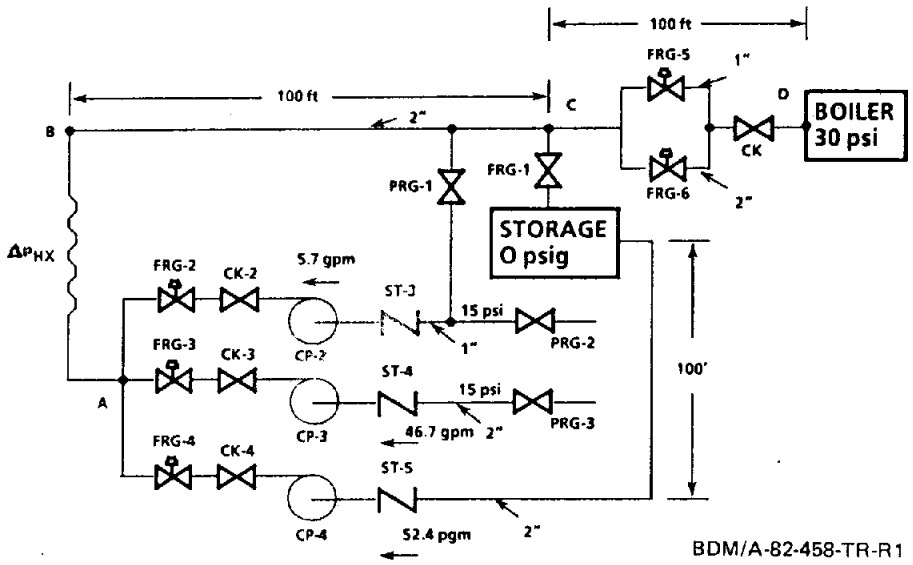

Figure IV-10. Flow System for Pump Sizing and Heat Loss Calculations

A distance of 100 ft (30.48 m) is assumed between the mechanical skid and storage tank, and another 100 ft (30.48 m) between the storage tank and boiler. Using the manufacturer's recommended conservative estimate, a pressure drop of 100 psi (0.69 MPa) is assumed across the flow regulators regardless of flow. Centrifugal pumps CP-2 and CP-3 operate in parallel between the pressure regulator outlet at 15 psig (0.2 MPa) and the boiler maintained at 30 psig (0.31 MPa). Pump CP-4 pumps water from and to the storage tank, maintained at atmospheric, in parallel with CP-2 and CP-3. Pumps CP-2 and CP-3 must overcome the static pressure differential of 15 psig (0.2 MPa), 200 psi (1.38 MPa) across the flow regulators and the friction head loss. Pump CP-4 has about 15 ft (4.57 m) suction head due to the height of the liquid in the storage tank.

The dynamic pressure drop through the piping and components depends on fluid viscosity and density. Since the average fluid

temperature at the collector outlet is 203°F (94.7°C), then for a heat exchanger effectiveness of 0.9375:

$$\varepsilon = 0.9375 = \frac{W_L\ (T_{c,o} - T_{c,i})}{W_{min}\ (T_{h,i} - T_{c,i})} = \frac{7.85\ (T_{c,o} - 178)}{(6.06)\ (203 - 178)}$$

$$T_{c,o}\ (avg) = 196.4^{o}F,\ (91.3^{o}C) \qquad T_{avg} = 187.2^{o}F\ (86.2^{o}C)$$

Thus, at the average temperature of 187.2°F (86.2°C):

Viscosity = μ = 0.338 Cp (3.38×10^{-4} Pa·s)
Density = ρ = 60.4 lb/ft^3 (967.6 kg/m^3)
$\gamma = 144/\rho = 2.38$

The pressure drop in psi through the heat exchangers is given by:

$$\Delta P_{hx} = 9.47 \times 10^{-3}\ (G/N_c)^{1.8}\ \mu^{0.2}\ \rho^{0.8} N_p$$

For a 176 ft^2 (16.4 m^2) exchanger there are 45 plates with 22 flow channels with one pass each, and two 90° elbows, the pressure drop is:

$$\Delta P_{hx} = 8.78 \times 10^{-4}\ G^{1.8}$$

The pressure drop from node B to node C is:

$$\Delta P_{B-C} = 1.63 \times 10^{-3}\ G^{1.8}$$

So that the drop from node A to C (line 1, figure IV-11) is:

$$\Delta P_1 = 2.51 \times 10^{-3} G^{1.8}$$

The pressure drop from node C to D is due to 30.48 m (100 ft) of 5.08 cm (2-in) pipe, two flow through T's, a check valve, and the section containing the two parallel flow control valves. Since the ΔP's across the parallel sections are equal, the total drop from C to D is obtained as follows:

(1) In the 1-inch (2.54 cm) leg containing FRG-5, the equivalent lengths consist of two side outlet T's 11 ft (3.35 m) and two 90° bends 5 ft (1.52 m) so that:

$$\Delta P_5 = \frac{G_5^{1.8} \mu^{0.2} \rho^{0.8} L_{eq}}{(4.7 \times 10^4)\ (D)^{4.8}} + 100 \text{ psi} = 7.29 \times 10^{-3} G_1^{1.8} + 100$$

(2) For the 5.08 cm (2-in) leg containing FRG-6, the equivalent lengths are two side outlet T's 24 ft (7.32 m) and two 90° bends 10 ft (3.05 m) so that:

$$\Delta P_6 = 5.56 \times 10^{-4} G_6^{1.8} + 100$$

(3) For both legs in parallel:

$$\Delta P_5 = \Delta P_6 = \Delta P_p$$

$$R_5 G_5^{1.8} = R_6 G_6^{1.8} = R_p (G_5 + G_6)^{1.8}$$

$$R_p = \left(\frac{G_6}{G_5 + G_6} \right)^{1.8} R_6$$

Under normal operating conditions G_1 = 5.7 gpm (3.6 x 10^{-4} m^3/sec) and G_2 = 46.7 gpm, (2.9 x 10 m^3/sec) so that:

$$R_p = \left(\frac{46.7}{46.7 + 5.7}\right)^{1.8} 5.56 \times 10^{-4} = 4.52 \times 10^{-4}$$

And:

$$\Delta P_p = 4.52 \times 10^{-4}(G_5 + G_6)^{1.8} + 100 \text{ psi}$$

(4) For the remainder of the system between nodes C and the boiler, the equivalent lengths are:

(a) Pipe length: 100 ft (30.48 m)

(b) Two flow-through T's: 10 ft (3.05 m)

(c) Check valve: 22.5 ft (6.86 m)

So that:

$$\Delta P_{C-D} = 2.17 \times 10^{-3}(G_5 + G_6)^{1.8}$$

The pressure drop from C to storage must equal the pressure drop from C to the boiler. Thus, FRG-1 must adjust itself such that the pressure drops across each leg are equal.

The pressure drops through the parallel lines containing the pumps are determined using equivalent lengths in table IV-5. Since each pump output must flow through a flow regulator, the zero point begins at 100 psi (0.69 MPa). Lines 2 and 3 have a positive suction head of 15 psi (0.1 MPa) provided by the existing feedwater pumps through the pressure regulators, and line 4 has a suction head of 6.3 psi (0.043 MPa) 15 ft (4.57 m).

TABLE IV-5. MINOR HEAD LOSS COMPONENTS AND EQUIVALENT LENGTHS IN PUMP LINES

LINE 2 (1" DIAMETER)	LINE 3 (2" DIAMETER)	LINE 4 (2" DIAMETER)
Pump Inlet/Outlet: 1 ft	Pump Inlet/Outlet: 1 ft	Pump Inlet/Outlet: [illegible]
Strainer: 11.8 ft	Strainer: 28 ft	Strainer: 28 ft
Check valve: 11.2 ft	Check Valve: 22.5 ft	Check Valve: 22.5 ft
90° Bend: 2.5 ft	Straight Run T: 4 ft	2 90° Bends: 10 ft
Side Outlet T: 5.5 ft		100 ft of Pipe: 100 ft
		Side Outlet T: 5.5 ft

Thus, the pressure drops between pump inlet and point A are:

$$\Delta P_2 = 1.46 \times 10^{-2}\ G_2^{1.8} + 85 \text{ psi}$$
$$\Delta P_3 = 9.1 \times 10^{-4}\ G_3^{1.8} + 85 \text{ psi}$$
$$\Delta P_4 = 2.73 \times 10^{-3}\ G_4^{1.8} + 93.7 \text{ psi}$$

In the following sections the system pressure drop is calculated for each combination of pump operation.

a. Pump CP-2

The flow-through CP-2 is 5.7 gpm (3.6×10^{-4} m^3/sec) so that the pressure drops are:

$$\Delta P_1 = (2.51 \times 10^{-3})(5.7)^{1.8} = 0.058$$
$$\Delta P_5 = 7.29 \times 10^{-3}(5.7)^{1.8} + 100 = 100.16$$
$$\Delta P_{C-D} = 2.17 \times 10^{-3}(5.7)^{1.8} = 0.05$$
$$\Delta P_2 = 1.46 \times 10^{-2}(5.7)^{1.8} + 85 = 85.33$$
$$\Delta P_{TOTAL} = 186 \text{ psi} + 30 = 514 \text{ ft } (156.7 \text{ m})$$

b. Pump CP-3

The flow-through CP-3 is 46.7 gpm (2.9×10^{-3} m^3/sec) so that the pressure drops are:

$$\Delta P_1 = (2.51 \times 10^{-3})(46.7)^{1.8} = 2.54$$
$$\Delta P_6 = (5.56 \times 10^{-4})(46.7)^{1.8} + 100 = 100.56$$

$\Delta P_{C-D} = 2.17 \times 10^{-3}(46.7)^{1.8} = 2.19$
$\Delta P_3 = 9.1 \times 10^{-4}(46.7)^{1.8} + 85 = 85.92$
$\Delta P_{TOTAL} = 191.2$ psi + 30 = 526 ft (160.4 m)

c. Pump CP-4

The flow-through CP-4 is 52.4 gpm (3.3×10^{-3} m^3/sec) so that the pressure drops are:

$\Delta P_1 = (2.51 \times 10^{-3})(52.4)^{1.8} = 3.12$
$\Delta P_{C-STOR} = (5.47 \times 10^{-3}(52.4)^{1.8} + 100 = 106.8$
$\Delta P_4 = 2.73 \times 10^{-3}(52.4)^{1.8} + 93.7 = 97.1$
$\Delta P_{TOTAL} = 207$ psi + 30 = 564 psi (172 m)

d. Pumps CP-2 and CP-3

The combined flow of these pumps is 52.4 gpm (3.3×10^{-3} m^3/sec). The pressure drop in lines 2 and 3 must be equal and is controlled by the flow control valves. The pressure drop in line 2 is 85.33 psi (0.59 MPa) and it is assumed that FRG-3 opens up to give the same pressure drop across line 3. Thus the pressure drops are:

$\Delta P_2 = \Delta P_3 = 85.33$
$\Delta P_1 = (2.51 \times 10^{-3})(52.4)^{1.8} = 3.12$
$\Delta P_{C-D} = (2.17 \times 10^{-3})(52.4)^{1.8} = 2.7$
$\Delta P_P = 4.52 \times 10^{-4}(52.4)^{1.8} + 100 = 100.56$
$\Delta P_{TOTAL} = 191.7$ psi + 30 = 528 ft (161 m)

e. Pumps CP-2 and CP-4

The combined flow of these pumps is 58.1 gpm (3.7×10^{-3} m^3/sec). The pressure at point A must be equal and, assuming the minimum pressure drop in both lines:

$\Delta P_2 = \Delta P_4 = 85.33$ psi
$\Delta P_1 = (2.51 \times 10^{-3})(58.1)^{1.8} = 3.76$

$\Delta P_{C-STOR} = \Delta P_{C-D} + \Delta P_5 = 100.21$ (maximum ΔP assumed)
$\Delta P_{TOTAL} = 189.3$ psi + 30 = 522 ft (159.1 m)

f. Pumps CP-2, CP-3, and CP-4

The combined flow of these pumps is 104.8 gpm (6.6×10^{-3} m^3/sec). For each parallel set of lines or pumps, the maximum pressure drop is assumed with the flow regulators developing sufficient head in the other lines to maintain the required flow.

$\Delta P_2 = \Delta P_3 = 85.33$ psi
$\Delta P_1 = (2.51 \times 10^{-3})(104.8)^{1.8} = 10.9$
$\Delta P_{C-STOR} = \Delta P_{C-D} + \Delta P_P = 106.8$
$\Delta P_{TOTAL} = 203$ psi + 30 = 554 ft (168.9 m)

These pressure drops for various pump combinations are given in table IV-6. The pressure drops are also plotted in figure IV-11 along with the characteristic pump curves for the pumps selected for the application.

TABLE IV-6. PUMP FLOW AND HEAD REQUIREMENTS

PUMP	FLOW (gpm)	DEVELOPED HEAD (ft)	POINT IN FIG. IV-11
CP-2	5.7	514	A
CP-3	46.7	526	B
CP-4	52.4	564	C
CP-2 + CP-3	52.4	528	D
CP-2 + CP-4	58.1	522	E
CP-2 + CP-3 + CP-4	104.8	554	F

10. Circulation Pump (CP-1)

In order to size the circulation pumps for the PV-T field, the total system head must be determined. A simplified flow resistance network is shown in figure IV-12. The resistance of the collector field is a combination of the resistance of the collectors plus the resistance

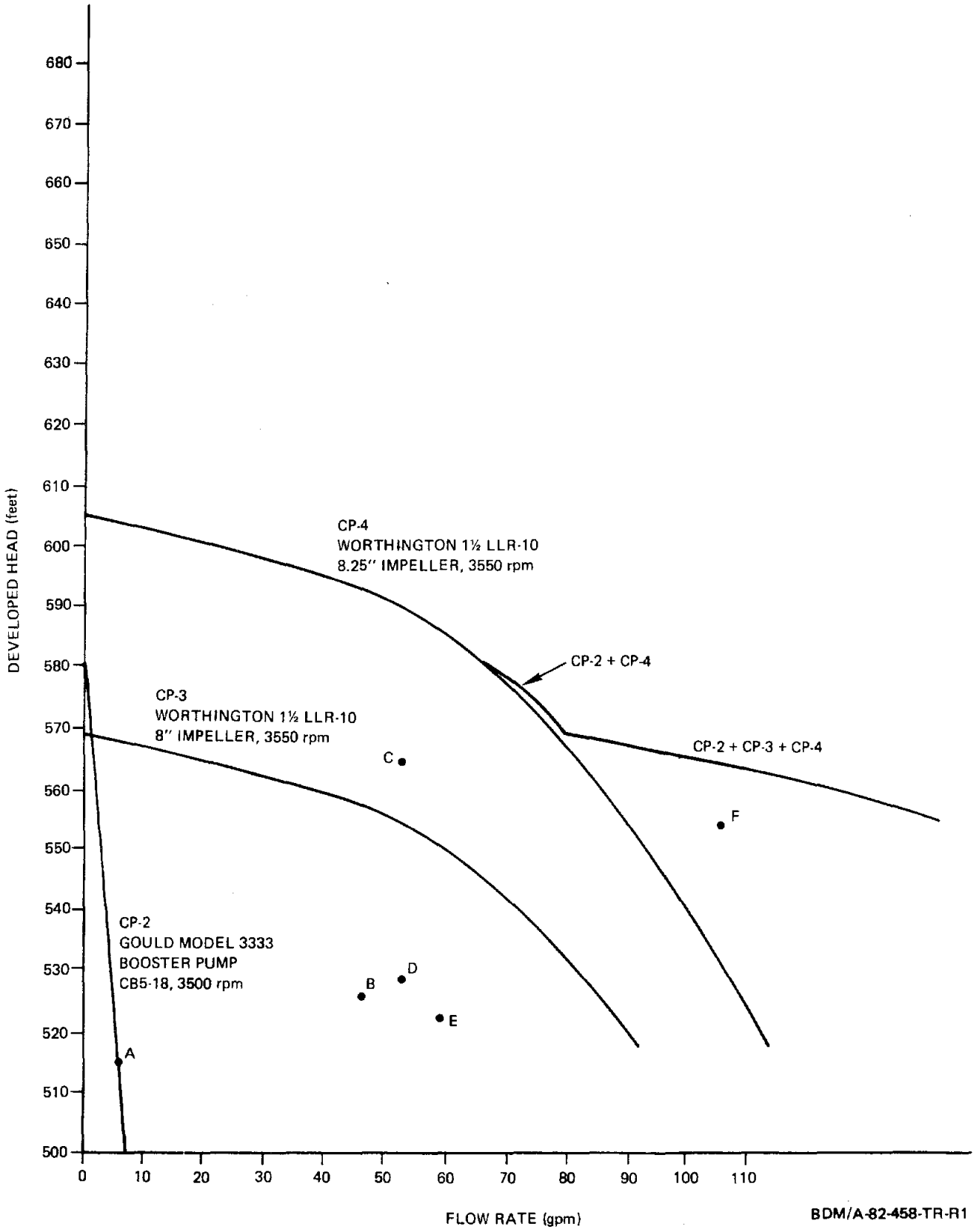

Figure IV-11. Pump Characteristics and System Operational Heads

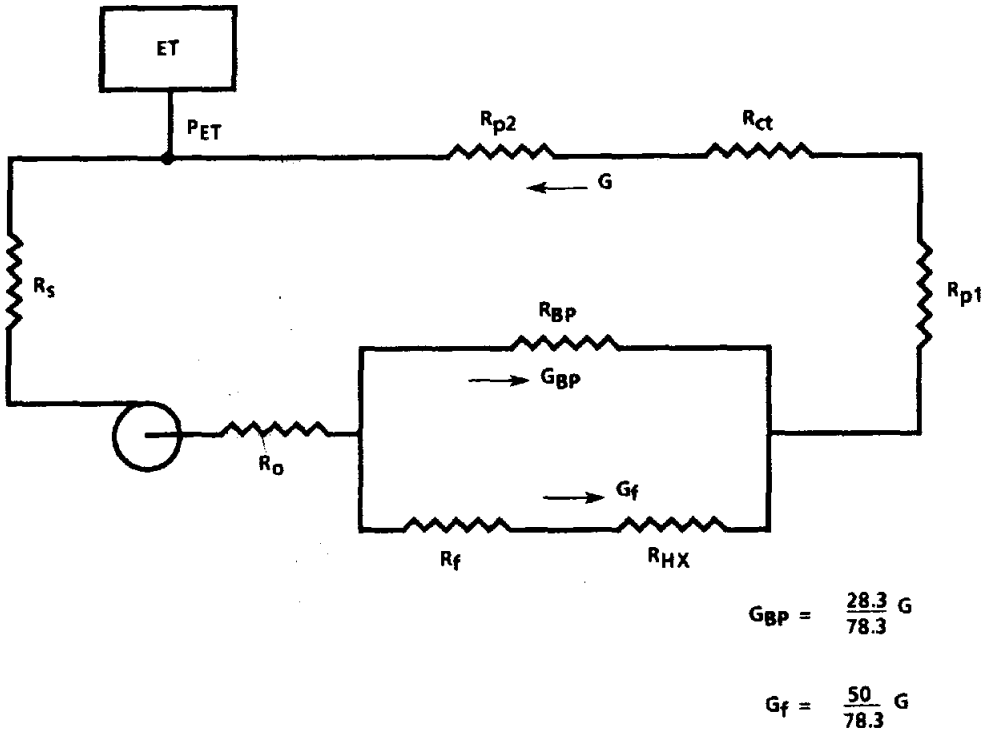

Figure IV-12. Flow Resistance Network for the Fresno, California Hospital

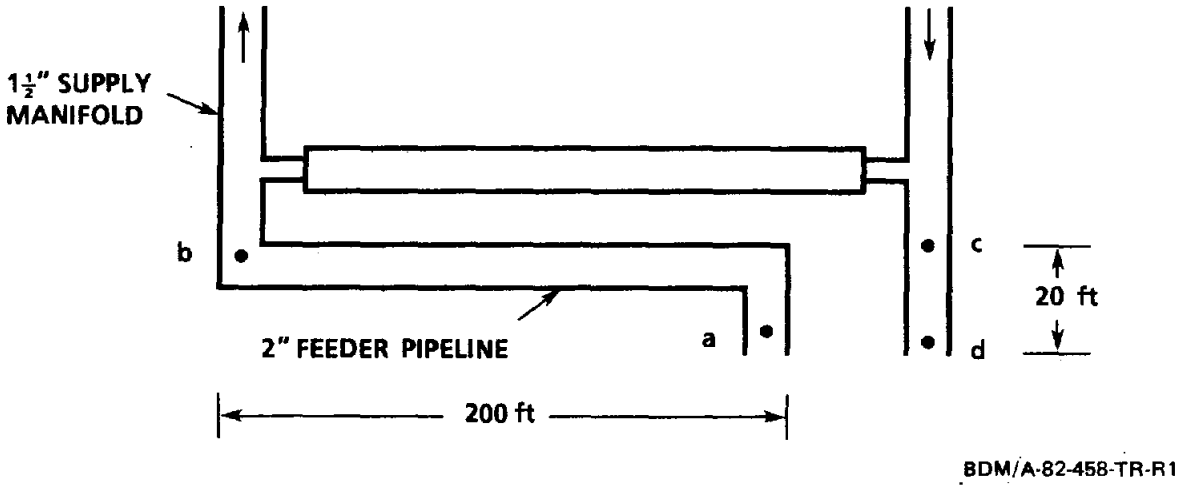

Figure IV-13. Collector Field Layout for Flow Resistance Calculations

of the supply and return manifolds from the mechanical skid to the field. This resistance is found by referring to figure IV-13 where points "a" and "d" are at the mechanical skid.

The pressure drop in psi from point "a" to "b" is given by:

$$\Delta P_{ab} = \frac{(G_f)^{1.8} \ \mu^{0.2} \ \rho^{0.8} L}{4.7 \times 10^4 \ D^{4.8}} \qquad \text{(Eq. IV-3)}$$

And the resistance is:

$$R_{ab} = \frac{\Delta P_{ab}}{(G_f)^{1.8}} \qquad \text{(Eq. IV-4)}$$

Where:

$D = 2$ in (5.08 cm)

$L = L_{ab} = 220$ ft + L_{eq} (67.1 m + L_{eq})

The equivalent length of two 90° bends is 10 ft (3.05 m) of 2 in (5.08 cm) pipe so that L_{ab} = 230 ft (70.10 m). The pressure drop from c to d is given by equation IV-3 where $L = L_{cd}$ = 6.10 m (20 ft). The pressure drop from b to c is given by:

$$\Delta P_{bc} = R_f \ (G_f)^{1.8} \qquad \text{(Eq. IV-5)}$$

where R_f is the field resistance obtained using the procedure in volume II, chapter IV-H. The total series resistance from "a" to "d" is then:

$$R_{ad} = R_{ab} + R_f + R_{cd}$$

$$\Delta P_{ad} = R_{ad} (G_f)^{1.8} = R_f (G_f)^{1.8} + \Delta P_{ab} + \Delta P_{cd} \quad \text{(Eq. IV-6)}$$

The pressure drop through the heat exchanger can be obtained using manufacturer's data and developing an empirical relation as shown in equation IV-7 for a Tranter plate heat exchanger using UX-216 type plates.

$$\Delta P_{hx} = 9.47 \times 10^{-3} (G_f/N_c)^{1.8} \mu^{0.2} \rho^{0.8} N_p \quad \text{(Eq. IV-7)}$$

Where:

N_c = number of flow channels

N_p = number of passes

Similarly, an expression for the cooling tower pressure drop may be developed. For the specified cooling tower the pressure drop is 0.63 psi (4344 Pa) at the design flow rate of 78.3 gpm (4.9×10^{-3} m^3/sec). This gives a pressure drop relation:

$$\Delta P_{ct} = 8.8 \times 10^{-6} G^{1.8} \mu^{0.2} \rho^{0.8} \quad \text{(Eq. IV-8)}$$

The distance from the mechanical skid to the cooling tower is 50 ft (15.24 m) so that the pressure drop in the piping from the skid to cooler is:

$$\Delta P_{pl} = \frac{G^{1.8} \mu^{0.2} \rho^{0.8} (100 \text{ ft})}{(4.7 \times 10^4) (2.5)^{4.8}} \quad \text{(Eq. IV-9)}$$

The pressure drop from the edge of the mechanical skid at the return from the cooling towers to the expansion tank inlet is due to 8 ft

(2.44 m) of 2.5-in (6.35 cm) pipe, one "T" with an equivalent length of 13 ft (3.96 m), and one air expander with an equivalent length of 85 ft (25.9 m). Thus, the pressure drop is:

$$\Delta P_{p2} = \frac{G^{1.8}\ \mu^{0.2}\ \rho^{0.8}\ (100\ ft)}{(4.7 \times 10^4)\ (2.5)^{4.8}} \qquad \text{(Eq. IV-10)}$$

The pressure drop from the expansion tank outlet to the pump inlet is due to 10 ft (3.05 m) of 2.5-in (6.35 cm) pipe, two 90° bends with an equivalent length of 12 ft (3.66 m), and a 2.5-in (6.35 cm) strainer with an equivalent length of 35 ft (0.67 m). Thus:

$$\Delta P_s = \frac{G^{1.8}\ \mu^{0.2}\ \rho^{0.8}\ (57)}{(4.7 \times 10^4)\ (2.5)^{4.8}} \qquad \text{(Eq. IV-11)}$$

The pressure drop from the pump outlet to the mechanical skid exit to the field is due to three 90° elbows with L_{eq} = 18 ft (5.56 m) of 2.5-in (6.35 cm) pipe, a "T" with L_{eq} = 6 ft (1.8 m), and a reduction from 2.5 in (6.35 cm) to 2 in (5.08 cm) with L_{eq} = 1 ft (0.305 m) so that:

$$\Delta P_o = \frac{G^{1.8}\ \mu^{0.2}\ \rho^{0.8}\ (51)}{(4.7 \times 10^4)\ (2.5)^{4.8}} \qquad \text{(Eq. IV-12)}$$

The pressure drops have been left in terms of the flow rate, viscosity and density so that the system head curve can be plotted at the average operating temperature of 183°F (90.5°C), and the start-up temperature of 68°F (20°C). The gate valve in the parallel leg flowing 28.3 gpm (1.8 m^3/sec) is set so that the pressure drop across R_{BP} at 28.3 gpm equals the pressure drop across R_f and R_{HX} at 50 gpm (3.2×10^{-3} m^3/sec). Thus, for any flow rate through the pump, G, the flow rate through the collector field and heat exchanger will be (50/78.3)G.

The total discharge head, or pressure developed at the pump exit is given by the sum:

$$h_d = \Delta P_o + \Delta P_{ad} + \Delta P_{hx} + \Delta P_{p1} + \Delta P_{ct}\ \Delta P_{p2} + \Delta P_{ET} \qquad \text{(Eq. IV-13)}$$

where ΔP_{ET} is the gage pressure in the expansion tank (5 psig maximum or 0.136 MPa). The suction head is:

$$h_s = 5 \text{ psig} - \Delta P_s \qquad \text{(Eq. IV-14)}$$

So the total system head is:

$$H = \Delta P_o + \Delta P_{ad} + \Delta P_{hx} + \Delta P_{p1} + \Delta P_{ct} + \Delta P_{p2} + \Delta P_s \qquad \text{(Eq. IV-15)}$$

The system head curve is shown in figure IV-14 where a safety factor of 10 percent was applied to the total system head.

When the field is operating at its maximum temperature, the pressure in the expansion tank is a maximum of 5 psig (0.136 MPa) and the vapor pressure of the ethylene glycol solution at 127°F (52°C) is about 90 mmHg or 1.74 psia (0.012 MPa). The maximum NPSHA is developed under these conditions and is given by:

$$\text{NPSHA (max)} = 5 \text{ psig} + 14.7 \text{ psia} - 1.74 \text{ psia} - \Delta P_s$$
$$= 16.8 \text{ psia} = 36.9 \text{ ft } (11.25 \text{ m})$$

where ΔP_s = 1.13 psi (7790 Pa).

The minimum NPSHA is developed at start-up when the fluid temperature is 68°F (20°C), the vapor pressure is 0.29 psia (2000 Pa) and the expansion tank pressure is -2 psig (0.083 MPa). Then:

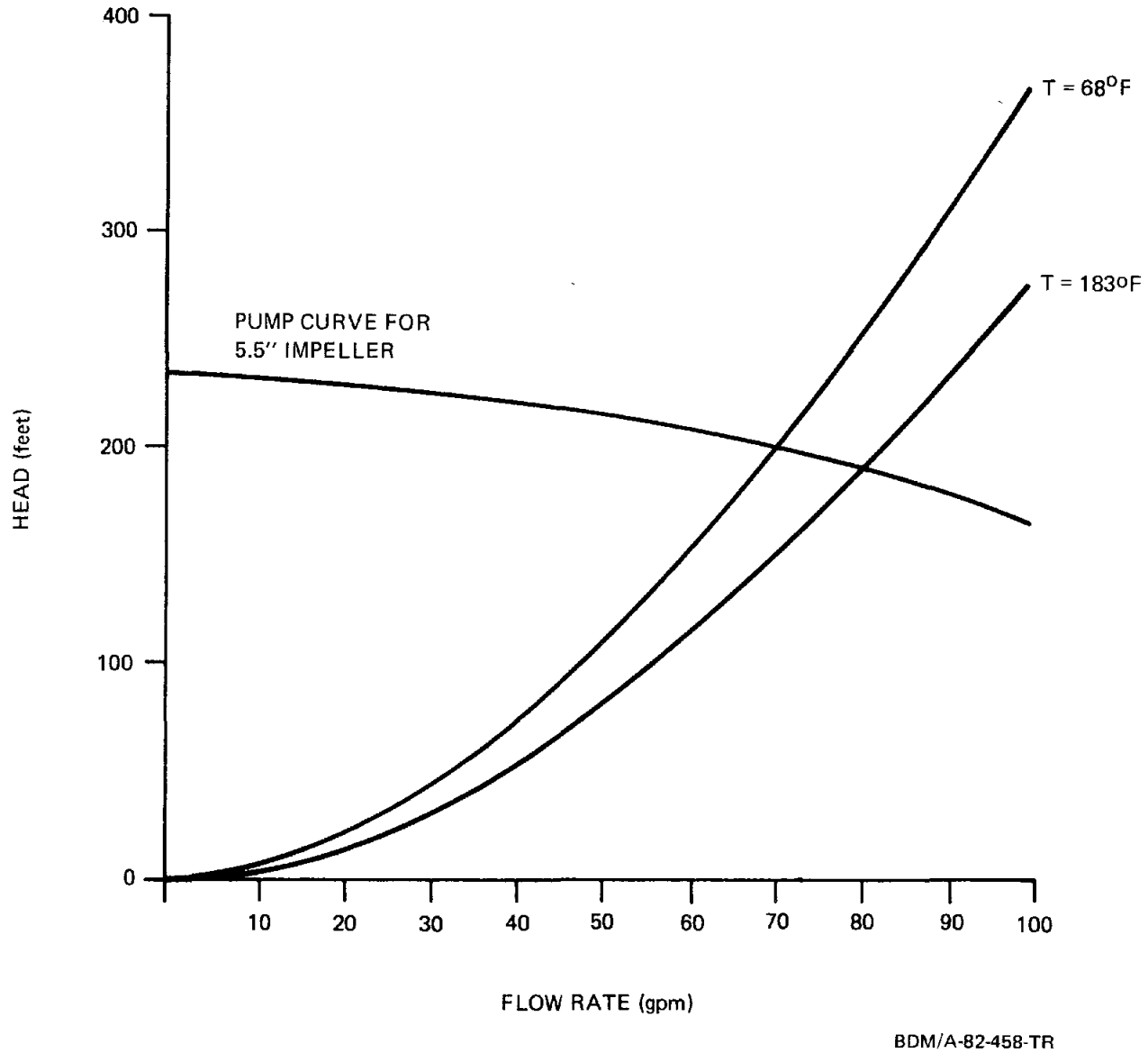

Figure IV-14. System and Pump Head Curves for Field Circulation Pump (CP-1)

$$\text{NPSHA (min)} = -2 + 14.7 - 0.29 - \Delta P_s = 11 \text{ psia} = 25.5 \text{ ft} \quad (7.8 \text{ m})$$

where ΔP_s = 1.35 psi (9308 Pa).

Under the design conditions (and assuming a 10-percent safety factor in the system head) the pump flow rate must be 78.3 gpm (4.9×10^{-3} m^3/sec) at an average temperature of 183°F (90.5°C) into a system head of 180 ft (54.8 m). Based on the design of the mechanical skid, a horizontal in-line, or double-suction pump is required. Using the pump performance curves provided by the Worthington Pump Co. for a horizontal split case pump at 3530 rpm, a type 1-1/2 LLR-7 was chosen with characteristic curves shown in figure IV-15.

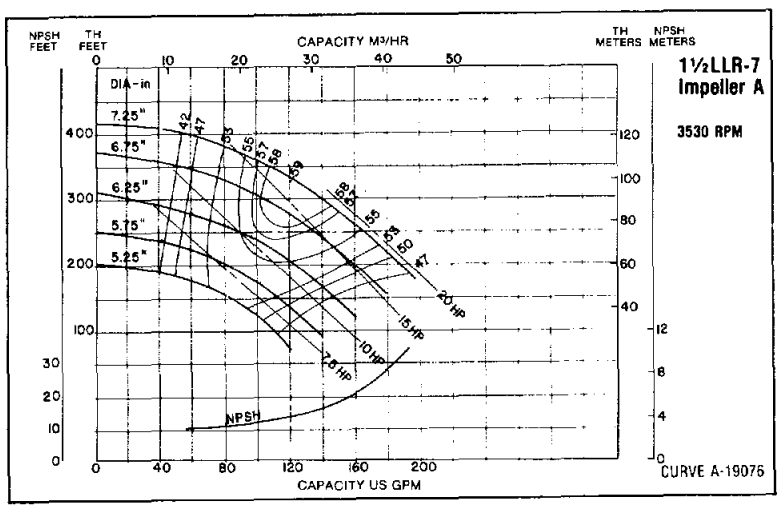

Figure IV-15. Characteristic Pump Head Curves for Worthington Model 1-1/2 LLR-7, 3530 rpm Pump

A pump with a 5.75-in (14.6 cm) impeller develops 200 ft (60.96 m) of head at 80 gpm (5.05×10^{-3} m^3/sec). Using the affinity law:

$$H_1/H_2 = (D_1/D_2)^2 \qquad \text{(Eq. IV-16)}$$

$$D_2 = \left[(5.75)^2\left(\frac{180}{200}\right)\right]^{1/2} = 5.45 \text{ in } (13.8 \text{ cm})$$

Since impellers can be purchased in 1/8-in (.32 cm) increments, a 5.5-inch inch (13.97 cm) impeller should be obtained for this pump. The brake horsepower is about 6 hp (4.5 kW) at an efficiency of 45 percent. The required NPSH is 11 ft (3.35 m), well below the NPSHA. The pump curve has been superimposed on the system head curve of figure IV-14. At start-up, when the fluid is 68°F (20°C), the flow will be about 72 gpm (4.5 m^3/sec) into a system head of 200 ft (60.96 m).

D. INSTALLATION PROCEDURES

During the course of the PV-T system design certain procedures and programs have been identified which are considered to be very important in the installation and final start-up of the system, but which are not part of system operation and maintenance once the system is in operation under plant cognizance. These procedures and programs apply principally to the tasks performed by the system supplier.

Presented and discussed in the following paragraphs are procedures applicable to the transportation and delivery of system hardware, onsite construction and assembly, and system preparation and checkout. It is assumed that arrangements have been made between the Fresno, California hospital management and the system supplier for advance planning and scheduling of the system hardware delivery and onsite coordination of activities during construction and assembly and system start-up and checkout. It is envisioned that the hospital management will designate a PV-T project engineer to interface directly with the system supplier's general job superintendent.

1. Transportation and Delivery

a. General

The PV-T system hardware will be transported to the installation site from four principal points. The solar collector

materials and PV cell subassemblies will be shipped directly from the E-Systems factory in Dallas, Texas to the hospital site. The storage tanks and cooling tower assemblies will be shipped from their respective manufacturers to the site. The remainder of the system hardware, with minor exceptions will be shipped from the supplier's home base to the site which is in consonance with the PV-T design concept which emphasizes the offsite (shop) fabrication, preassembly, and test of system components and subassemblies to the greatest extent possible.

b. Packaging and Shipping

(1) Collector Materials

The E-Systems collector materials will be shipped from the factory in Dallas, Texas to the user site by commercial trucks. The 90 arrays will be packaged and shipped in racks of three, each weighing approximately 1360 kg (3000 pounds). The receiver tubes with PV cells attached will be preassembled in the collectors. Most equipment such as the post assemblies and assembly axle blocks, will be shipped on pallets weighing no more than 363 kg (800 pounds). It is estimated that approximately 15 truckloads (six arrays per truck) will be required to ship the collector materials.

(2) Skid Subassemblies

All final assembly, testing and cleaning will be performed before the mechanical skid is prepared for shipment. The skid has been sized and the equipment arranged to facilitate handling and road transportation. The shipping weight will be approximately 2268 kg (5000 pounds) with the expansion tank, heat exchanger, pump and piping well distributed to facilitate balance on the 12 ft by 27 ft (3.66 by 8.23 m) steel I-beam base. The steel base incorporates six lifting lugs for crane handling with a spreader bar. Prior to shipment, the flanged ends of the ethylene glycol (EG) circulation loop and the domestic water (DW) circulation loop piping will be braced to prevent movement during handling and transporation.

The packaged cooling tower incorporates lifting lugs and will be handled by crane in the same manner as the mechanical equipment skid.

(3) Storage Tanks

The three 6000-gallon (22.7 m^3) storage tanks are factory fabricated with standard connections and manholes. The unused connections must be blocked off in the field. Upon arrival each tank should be inspected for damage, and the interior inspected to ensure the glass lining is undamaged. The shipping weight of each tank is about 7400 pounds (3356 kg).

c. Materials Delivery

(1) Collector Materials

The collector materials will be delivered to the hospital at such time as the required PV-T site preparation is complete (grading, foundations, service roads and drives, etc.) and the system supplier is mobilized onsite and ready to proceed with hardware assembly. The array racks, post assemblies and assembly axle blocks will be unloaded with requisite lifting equipment and placed so as to minimize handling distances during installation.

(2) Other Materials

The shop fabricated components and subassemblies and other materials will be delivered at a time roughly coinciding with completion of the erection and assembly of the collector arrays. The skid subassemblies will be unloaded from the trucks onto the prepared foundation pads and properly positioned for hookup.

2. Onsite Organization and Management

A job superintendent and assistant who are full time employees of the PVT supplier and are intimately familiar with the system will be responsible for overall onsite direction and supervision during installation and checkout.

It is assumed that the bulk of the labor and skills required for the system installation can be procured in the general locale of the hospital. Key mechanical and electrical tasks will be accomplished by system supplier mechanical and electrical subcontractors.

3. Construction and Assembly

The onsite construction and assembly for the installation of the PV-T system can be broken down into a number of general tasks. The procedures involved in carrying out these tasks are discussed in the following paragraphs. These procedures assume that the hospital site has been prepared in accordance with the drawings and specifications.

a. Installation of the Collector Field

The installation of the collector arrays, the storage tanks, the ethylene glycol/water loop piping and domestic water piping are major tasks that require leadwork by the system supplier.

(1) Collector Array Installation

Each collector array is composed of four collector modules that are factory-assembled complete with receiver tubes and PV cells mounted. Each row in turn consists of nine collector arrays supported on seven idler post assemblies, one main drive post and two intermediate drive post assemblies. The initial step in the assembly of the row is the placement and alignment of the idler and drive posts. After the posts have been aligned and the mounting bolts tightened the post assembly axle blocks are installed and the collector arrays mounted. The interconnect horizontal drive shaft is then installed on each post.

The next step is to level all array units by rotating the upper speed reducer input shaft and install the frame splices. The end pully assemblies on each end array unit are now installed and the vertical drive shafts pinned to the respective lower gear box.

After securing the modules on the center array unit to prevent rotation, align all the modules in the array unit to the center array unit using the alignment tool provided. The

collector drive bar splice is now installed between the aligned array units.

The final step in the assembly of the collector array row is the installation of the tilt sensor and connection of the cabling from the sensor to local box on the main drive and the interconnection of the DC power cables in series between arrays in the electrical row.

(2) Installation of Array Loop Pipe Sections

After the collector array rows have been assembled, the shop fabricated 1-in (2.54 cm) diameter pipe sections with in-line components are installed to connect nine arrays in a delta-T string. The strings are supplied return coolant from the 1-1/2 in (3.81 cm) supply manifold and hot fluid is collected in the 1-1/2-in (3.81 cm) return manifold. Installed in each string are an inlet and outlet section at the manifold end of the string. Shop fabricated supports are installed on prepared foundations to support the manifolds.

b. Installation of EG Circulation Loop Field Pipe Sections

This work consists of the assembly and hookup of the following field piping:

(1) Two-inch (5.08 cm) diameter pipe from the mechanical skid to the collector field.

(2) Two-inch (6.35 cm) diameter pipe from the mechanical skid to the cooling towers.

(3) Two-inch (5.08 cm) diameter pipe from the collector field to the mechanical skid.

Various sections of the EG field piping are shop fabricated to facilitate the site work. Shop fabricated pipe supports and anchors are installed on prepared foundations at points required. The assembly of this piping requires a combination of welded and bolted flanged connections. All EG circulation loop field fabricated piping will be thoroughly cleaned as work progresses to minimize harmful contamination of the field.

c. Installation of DW Circulation Loop Pipe Sections

This work consists of the assembly and hookup of the following piping:

(1) One-inch (2.54 cm) and 2-in (5.08 cm) diameter pipe from the feed water pump to the mechanical skid.

(2) Two-inch (5.08 cm) diameter pipe from the mechanical skid to the 18,000-gallon (68 m^3) storage tank.

(3) Two-inch (5.08 cm) diameter pipe from the storage tank to the boiler.

(4) Two-inch (5.08 cm) diameter pipe in the temperature control bypass loop.

As with the EG circulation loop various sections are prefabricated and the same cleaning and assembly precautions apply.

d. Installation of the Storage Tanks

Proper installation of storage tanks is essential. The foundations under the tanks must be strong enough to support the weight of the tank and the water the tank will hold. Water weighs about 8.3 pounds per gallon (994.6 kg/m^3), so the water in each 6,000-gallon (22.7 m^3) tank will weigh 49,800 pounds (22600 kg). The concrete slab should be adequate to support the tanks. If the foundation is inadequate to hold the weight, the tanks may settle and cause leaks in the connected piping or in the tank itself.

When the tanks have been properly installed on the concrete slab and the piping connected, unused ports closed off, and pressure relief valves and vacuum breakers installed, the enclosure should be constructed. The enclosure is a pre-fabricated metal shed with vents near the roof line, and with 3 in (7.62 cm) of fiberglass insulation on the walls, roof, and floor.

e. Installation of Electrical/Control Distribution

This work consists of the installation and hookup of the underground direct burial cabling, the above ground rigid conduit, transformers, inverters, and switchgear for electrical power supply and array power takeoff. The following field connections are required:

(1) Two-wire DC direct burial cable from each of the 10 electrical rows to the two subfield maintenance and safety (M&S) enclosures. There are five electrical loops to each subfield M&S enclosure.

(2) Two-wire DC direct burial cable from each of the two subfield M&S enclosures to the two safety switches in the Electrical Control Building.

(3) Busses from safety switches to the inverter.

(4) Busses from inverter to AC switchgear and transformer.

(5) Installation of AC distribution panels and utility outlets.

(6) Two-wire AC direct burial cable from distribution panel to drive and intermediate drive posts.

(7) Uninterruptable power supply (UPS) to the hazard panel and master tracking controller.

(8) Interruptable power supply (IPS) to the AC panelboard.

The electrical/control distribution work will be started as soon as the collectors, transformers, inverters, electrical control building and other materials are onsite and installation has proceeded to a point permitting phased electrical connections.

After electrical/control distribution system has been installed and the system energized, a thorough operational test will be made to insure the operational integrity and safety of the system.

FRESNO HOSPITAL

P.V.T.

02F001833

DRAWING INDEX

SHT. NO.	TITLE
1	ELECTRICAL BLOCK DIAGRAM
2	ELECTRICAL FIELD SCHEMATIC
3	OUTDOOR SUBFIELD MAINTENANCE & SAFETY ENCLOSURE
4	
5	A.C. ONELINE DIAGRAM
6	ELECTRICAL CONTROL BUILDING LAYOUT & ARRANGEMENT
7	FIELD COUNTERPOISE GROUNDING LAYOUT
8	
9	
10	
11	COLLECTOR ARRAY LAYOUT
12	COLLECTOR PIER LAYOUT
13	PIPING & INSTRUMENTATION DIAGRAM
14	MECHANICAL SKID
15	MANIFOLD DETAILS
16	BLOCK FLOW DIAGRAM
17	
18	
19	
20	

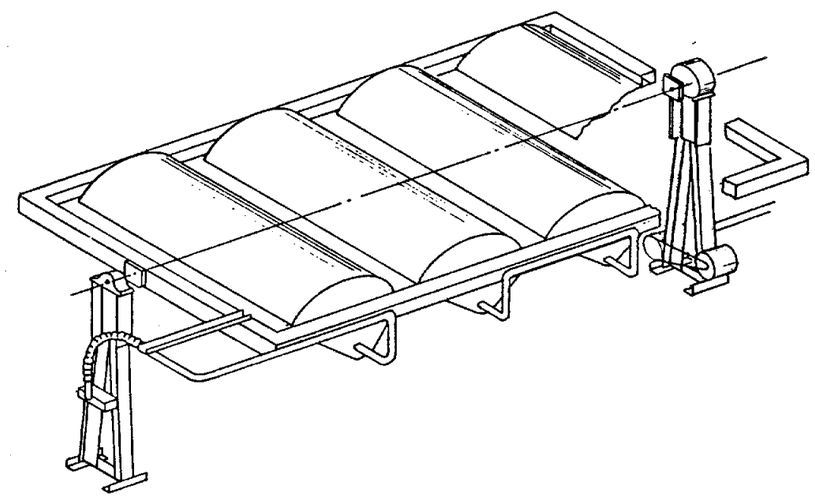

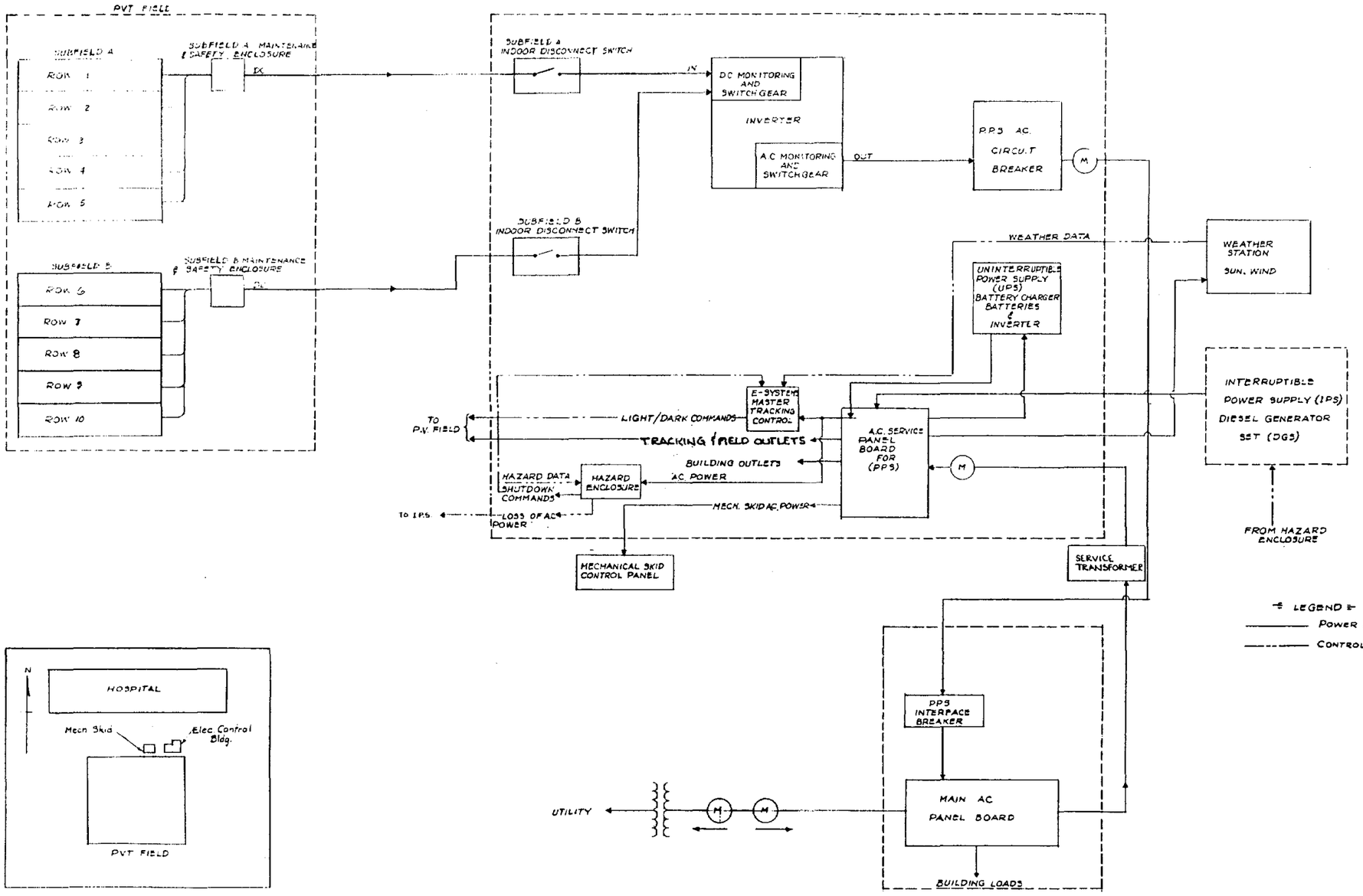

PVT, PLANT ORIENTATION

NO. REQ'D	PART NO.	MATERIAL	DESCRIPTION	ITEM NO.
			LIST OF MATERIAL	

DRAWN E Thorne DATE 5-7-83
CHECKED 5-7-83
ENGINEER
FINAL CHECK
PROGRAM MANAGER 7/14/83
MATERIAL
FINISH
TOLERANCES
UNLESS OTHERWISE SPECIFIED DIMENSIONS ARE IN INCHES CONTRACT OR DEPT CENTER

BDM

TITLE
ELECTRICAL BLOCK DIAGRAM
FRESNO HOSPITAL P.V.T.
FRESNO, CALIFORNIA

DRAWING CONTROL	SIZE	DWG NO	REV
52308	F	02F001833	

SCALE NONE SHEET 1

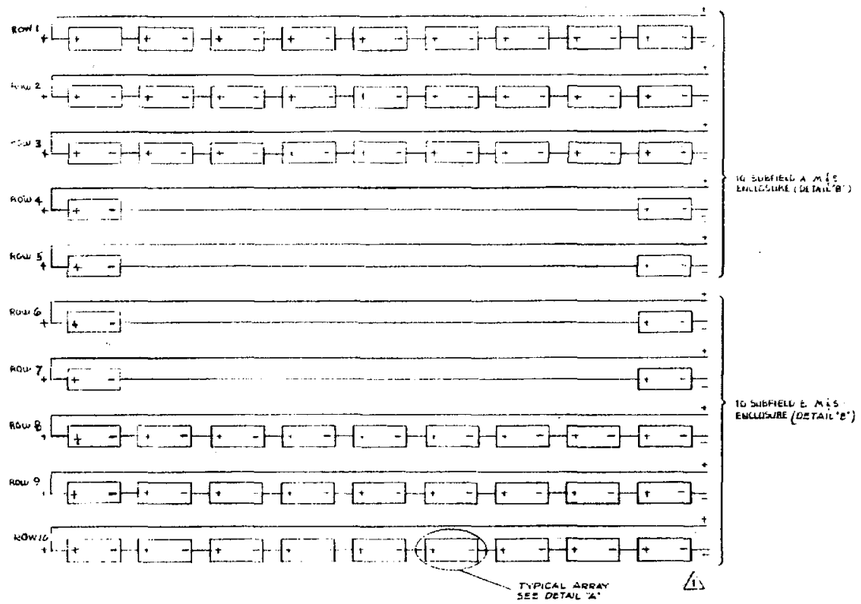

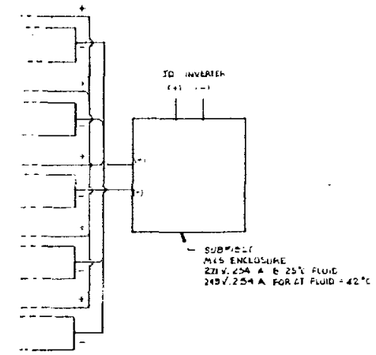

DETAIL "B"

TYPICAL WIRING TO SUBFIELD MAINTENANCE AND SAFETY (M&S) ENCLOSURE (2)

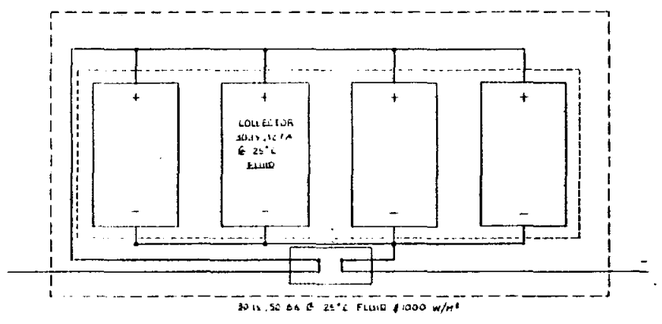

DETAIL "A" ARRAY

NOTES:

TERMINATE EACH END OF EACH STRING IN JUNCTION BOX AT END VERTICAL POST. DIRECT BURIAL CONDUCTORS TO BE IN CONDUIT FROM J-BOX TO UNDERGROUND. CONDUIT TERMINATES TWO FEET BELOW GROUND. CONDUCTORS ARE ROUTED IN TRENCHES TO M&S ENCLOSURE WHERE CONDUIT TAKES CONDUCTORS FROM UNDERGROUND TO ENCLOSURE.

DRAWN K Cox			ELECTRICAL FIELD SCHEMATIC,
CHECKED			FRESNO HOSPITAL P.V.T. FRESNO, CALIFORNIA
			52309 F 002 F00 1839
			SCALE NONE SHEET 2

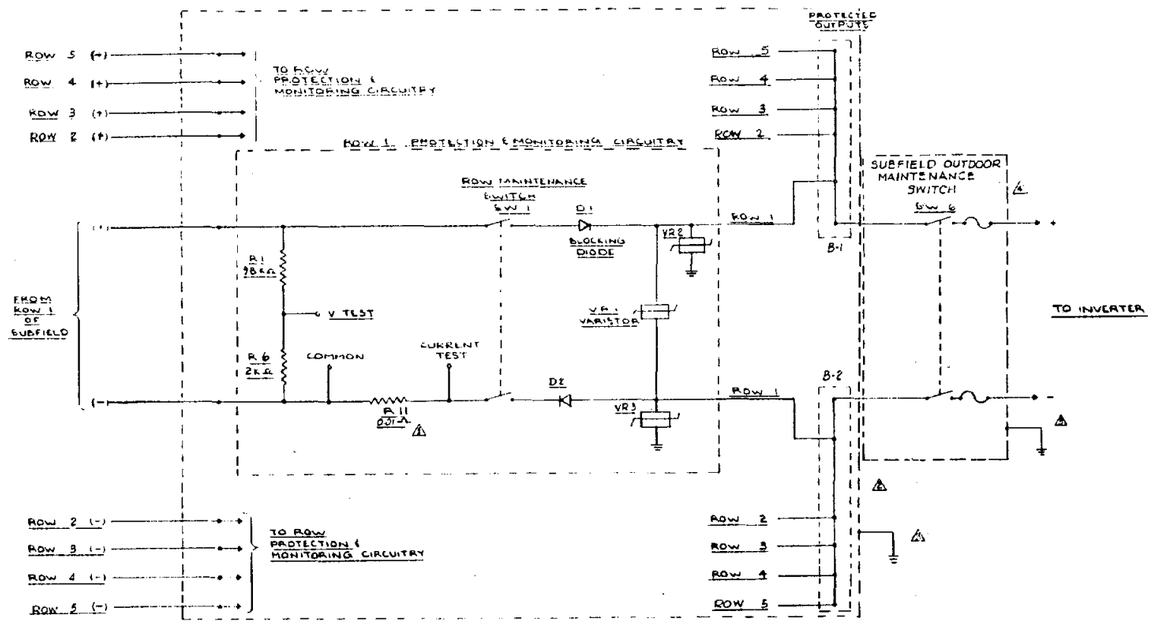

⚠ CURRENT SHUNT CARRIES FULL CURRENT UNDER NORMAL OPERATION. CURRENT TEST POINT WILL BE NEGATIVE WITH RESPECT TO COMMON

⚠ M & S ENCLOSURE AND MAINTENANCE SWITCH ARE MOUNTED NEAR POST AT ROW 3 NEGATIVE TERMINAL

⚠ GROUND M & S ENCLOSURE AND MAINTENANCE SWITCH CASE TO COUNTERPOISE

⚠ D.C. CABLES TO AND FROM ENCLOSURES TO BE DIRECT BURIAL UNDERGROUND SERVICE TYPE. CABLES ABOVE GROUND ARE IN CONDUIT. CONDUIT TERMINATES TWO FEET BELOW GRADE. CABLE RUNS TO THE FIELD AND TO THE ELECTRICAL CONTROL BUILDING ARE TWO FEET BELOW GRADE WITHOUT CONDUIT.

ITEM NO.	DESCRIPTION	NO. REQ'D	PART NO.
EN-1	NEMA 3R ENCLOSURE (48" H. × 36" W. × 18" D.)	1	
R1-5	RESISTOR, 98 K-Ω, 1 W. 1%	5	(DALE) WWA-41G (OR EQUIV)
R6-10	RESISTOR, 2 K-Ω, 0.1 W, 1%	5	(DALE) EMF 50-10 (" ")
R11-15	RESISTOR, 0.01 Ω, 50 W., 1%	5	(DALE) RH-50 (OR EQUIV)
SW1-5	SWITCH, 2 POLE, 600 VDC, 60 A.	5	(SQUARE D) HU-262
VR1-15	VARISTOR, 420 V.	15	(GE) V320 PA 40 A
D1-10	DIODE, 1200 V. 70 A	10	(IR) IRKE 71-12
SW-6	SWITCH, 2 POLE, 600 VDC, 400 A FUSIBLE, RAINPROOF	1	(SQUARE D) H 265 R
B1-2	BUSBAR, 400 A., 6 TERMINAL	2	

DRAWN	HRACSINA	11-5-81	
CHECKED		11-5-81	
ENGINEER			
SPECIAL GROUP			
PROGRAM MANAGER		5/14/82	

MATERIALS
FINISH
TOLERANCES
UNLESS OTHERWISE SPECIFIED DIMENSIONS ARE IN INCHES
CONTRACT OR COST CENTER

SEDAR

TITLE
OUTDOOR SUBFIELD MAINTENANCE & SAFETY ENCLOSURE

FRESNO HOSPITAL P.V.T.
FRESNO, CALIFORNIA

DRW. SHEET	REV.	DWG. NO.	REV.
52308	F	02 F00 1833	

SCALE — SHEET 5

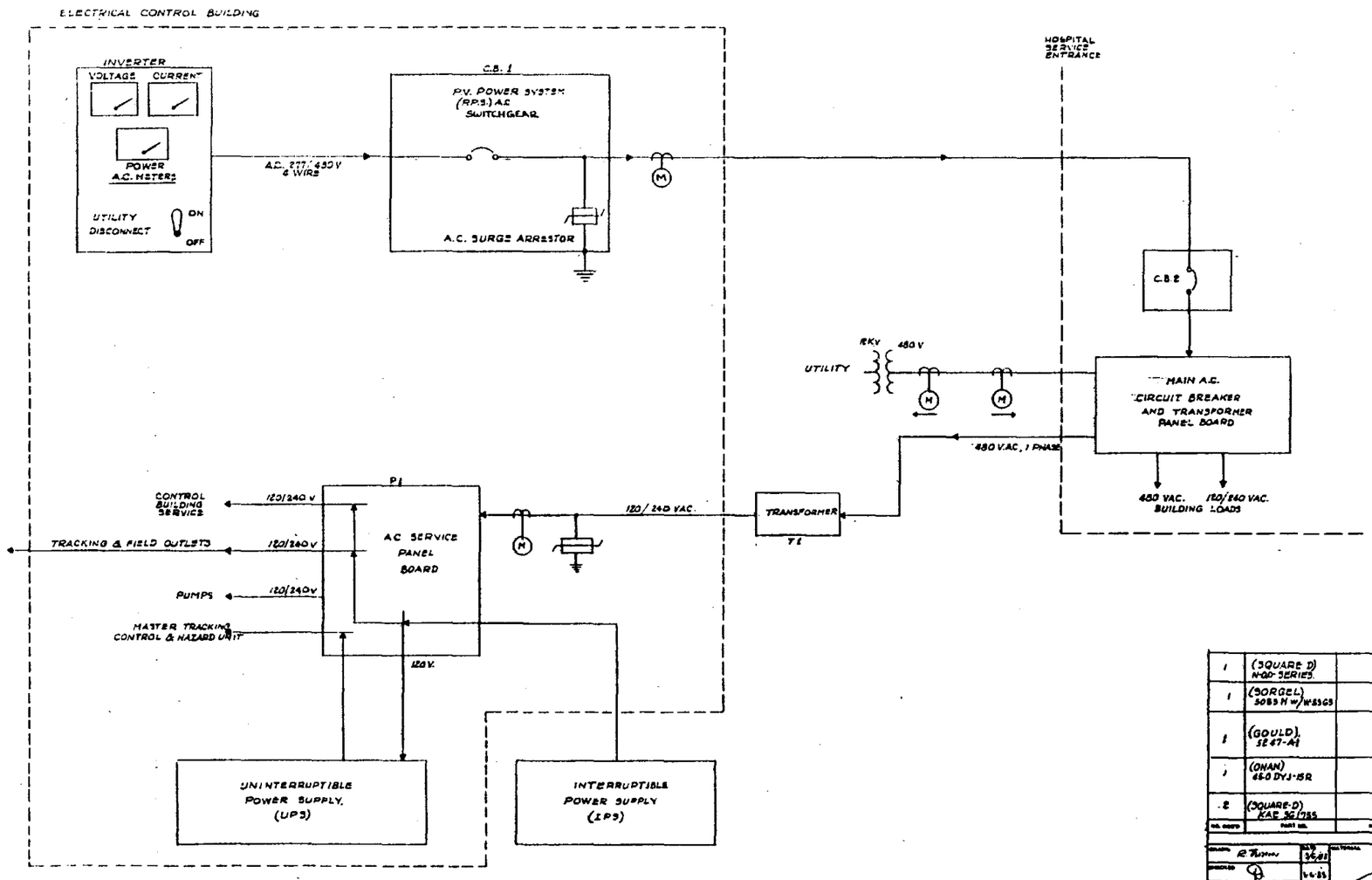

1	(SQUARE D) H-QD SERIES.		A.C. SERVICE CIRCUIT BREAKER PANEL BOARD 240V. SINGLE PHASE, 3 WIRE.	P-1
1	(SORGEL) 50B3 H w/WB3G3		TRANSFORMER, DRY TYPE, 50 KW, 480V. to 120/240 V. W/WEATHER SHIELD	T-1
1	(GOULD). SE 47-A1		UNINTERRUPTIBLE POWER SUPPLY, 3 KVA INVERTER, 12 VAC., 1 PHASE, 60 Hz W/CLOSED GEL-CELL BATTERIES AND RECTIFIER 120 VAC. to 135 VDC.	UPS
1	(ONAN) 45-0 DYJ-5R		INTERRUPTIBLE POWER SUPPLY, DIESEL GENERATOR SET 45 KW W/CYL. 3/4 CU. ENG. 155 AH 12 V. LEAD ACID Batteries 50 Gal/Hr.	IPS
2	(SQUARE-D) KAF 36/785		ENCLOSED 3 POLE CIRCUIT BREAKER, 480 VAC. E2SA ENCLOSURE w/ 4 75A BREAKER	CB1,2
NO. REQ'D	PART NO.	MATERIAL	DESCRIPTION	ITEM NO.

LIST OF MATERIAL

R. Fusman 3-6-81
6-6-83
5-16-83
7/24/83

BDM

A.C. ONE LINE DIAGRAM

FRESNO HOSPITAL P.V.T.
FRESNO, CALIFORNIA

52308 F 02-F00 1833

SCALE NONE SHEET 5

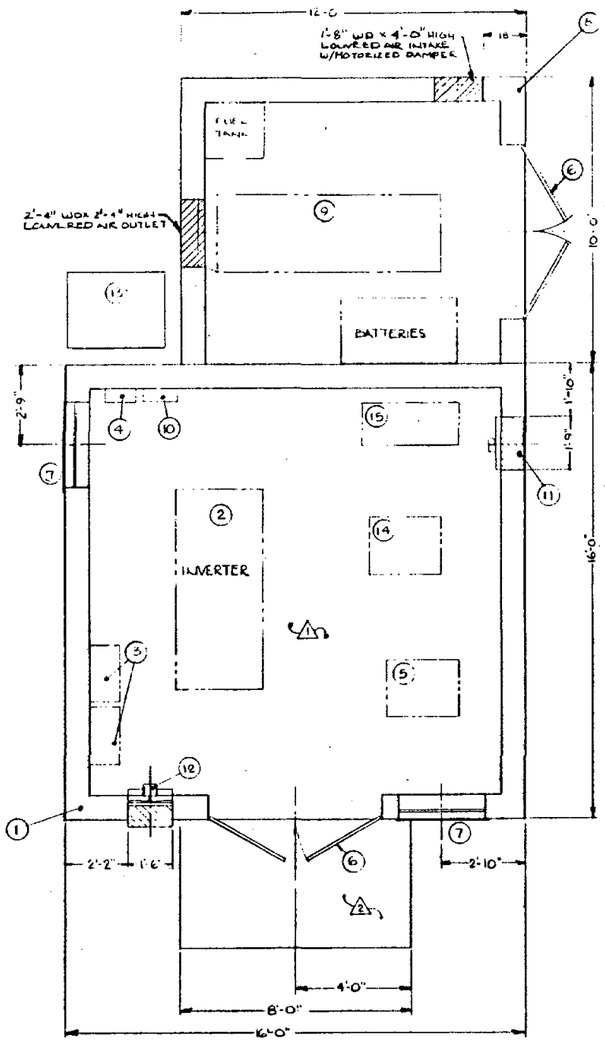

FLOOR PLAN
SCALE ½" = 1'-0"

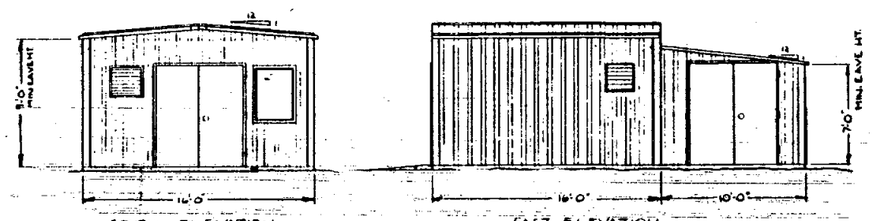

SOUTH ELEVATION
SCALE: ¼" = 1'-0"

EAST ELEVATION
SCALE: ¼" = 1'-0"

ITEM NO.	DESCRIPTION	NO. REQ'D
1	BUILDING STAHL-STRAHL MASTER SERIES, 16'L x 16'W x 9' EAVE HT, 1 on 12 ROOF SLOPE	1
2	BESAYA INVERTER (7'0" W x 3'0" DP x 6'4" H)	1
3	SUBFIELD DISCONNECT SWITCH 2 POLE, 600 VDC, 600A, NEMA 1, (SQUARE D), HU265 (39 3/4" H x 25 1/4" W x 12" DP)	2
4	PV POWER SYSTEM (PPS) CIRCUIT BREAKER PANEL (18 3/4" H x 12 1/4" W x 5 3/8" DP)	1
5	MASTER TRACKING CONTROL AND HAZARD UNIT	1
6	METAL DOORS (3' x 7')	4
7	WINDOWS (4' H x 3' W)	2
8	GENERATOR ENCLOSURE (10' W x 12' L x 7' EAVE HT.) 1 ON 12 ROOF SLOPE	1
9	DIESEL-DRIVEN GENERATOR SET RADIATOR-COOLED, W/50 GAL. TANK AND ENGINE-START BATTERIES	1
10	AC SERVICE PANEL BOARD (APPROX. 42" H x 14" W x 5" DP)	1
11	MOTORIZED LOUVERED AIR INTAKE WITH CLEANABLE FILTER	1
12	EXHAUST FAN 600CFM, 120 VAC, W/LOUVERED EXHAUST PORT	1
13	SERVICE TRANSFORMER 240x480 PRIMARY TO 120/220 SECONDARY, 50 kVA	1
14	UPS SYSTEM (61" H x 24" W x 30" DP)	1
15	BATTERY BANK, CLOSED GEL CELL (APPROX. 30" H x 40" L x 18" DP)	

NOTES

1. CONCRETE SLAB 6" THICK, W.W. FABRIC REINF. 6x6 4 GA. ALL FOUR EDGES OF CONCRETE SLAB SHALL BE TURNED DOWN AS SHOWN BELOW.

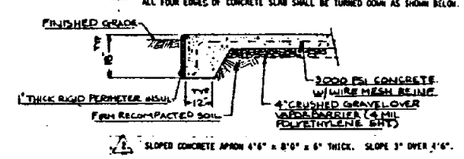

2. SLOPED CONCRETE APRON 4'6" x 8'0" x 6" THICK. SLOPE 3" OVER 4'6".

DRAWN	K. HEILBRUN	DATE 3-17-83	
CHECKED		3-17-83	
ENGINEER			
PROGRAM MANAGER		3/14/83	

BDM

TITLE
ELECTRICAL EQUIPMENT BUILDING LAYOUT / ARRANGEMENT

FRESNO HOSPITAL P.V.T.
FRESNO, CALIFORNIA

DWG. NO.	SIZE	DWG. NO.	REV.
52308	F	02F001833	

SCALE AS NOTED SHEET 6

Drawing E-6

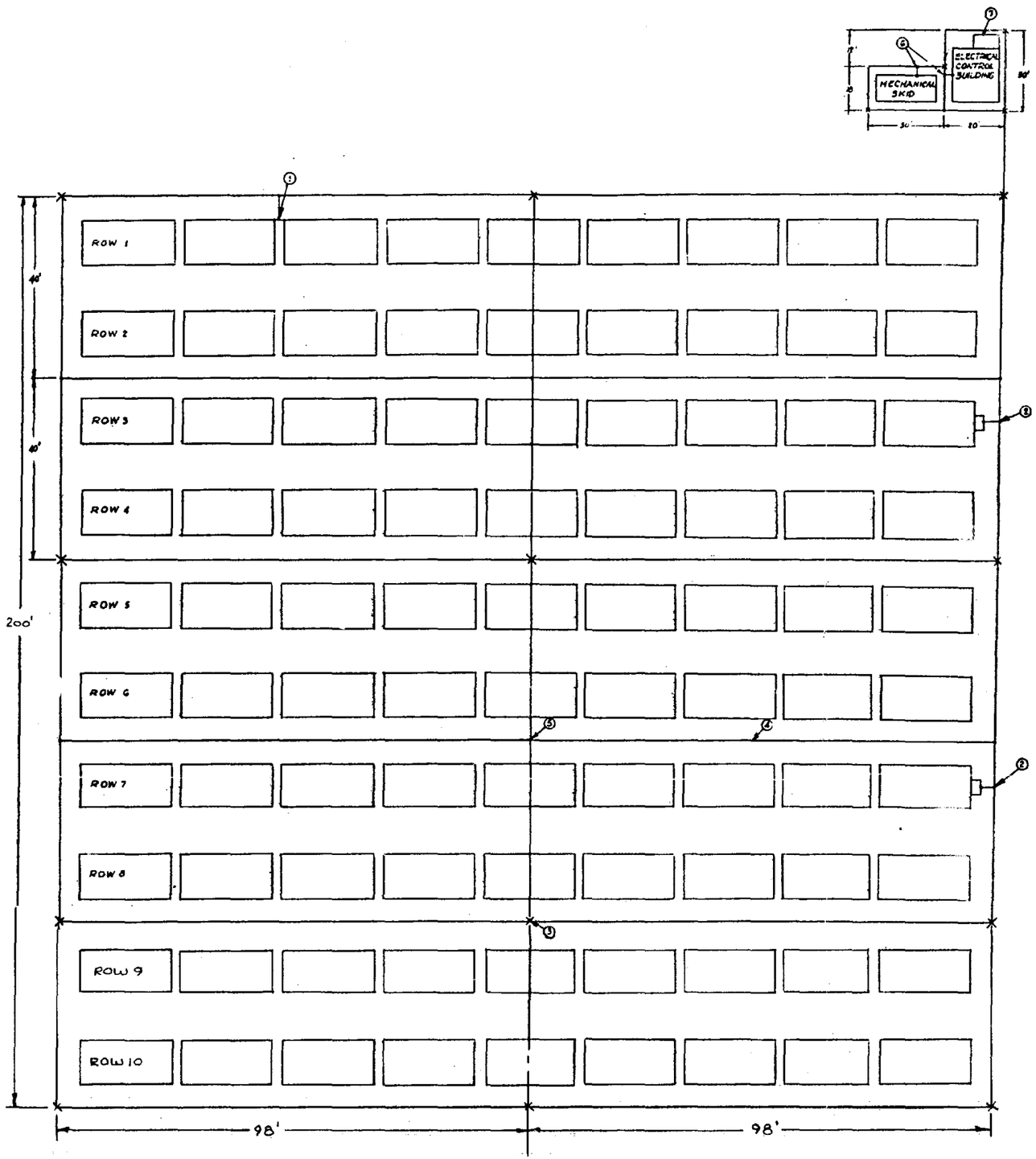

NOTE

1. GROUND ALL VERTICAL POSTS TO COUNTERPOISE
2. GROUND EACH SUBFIELD MAINTENANCE AND SAFETY ENCLOSURE CASE.
3. 10 ft. GROUND RODS EVERY 80-100 ft.
4. AWG #4/0 STRANDED BARE COPPER WIRE BURIED 2' DEEP
5. COUNTERPOISE CONNECTED AT ALL INTERSECTIONS. (BURNDY OR EQUIVALENT BOLTED CABLE TO CABLE CONNECTOR)
6. GROUND BUILDING AND MECHANICAL SKID ON ALL FOUR SIDES AND ALL ELECTRICAL EQUIPMENT CASES TO COUNTERPOISE WITH #4/0 STRANDED BARE COPPER WIRE.
7. ELECTRICAL CONTROL BUILDING AND MECHANICAL SKID TO BE PROTECTED BY LIGHTNING AIR TERMINALS GROUNDED TO COUNTERPOISE.

SBDM

FIELD COUNTERPOISE GROUNDING LAYOUT

FRESNO HOSPITAL P.V.T.
FRESNO, CALIFORNIA

52308 | F | 02 F00 1833

None

Drawing M-1

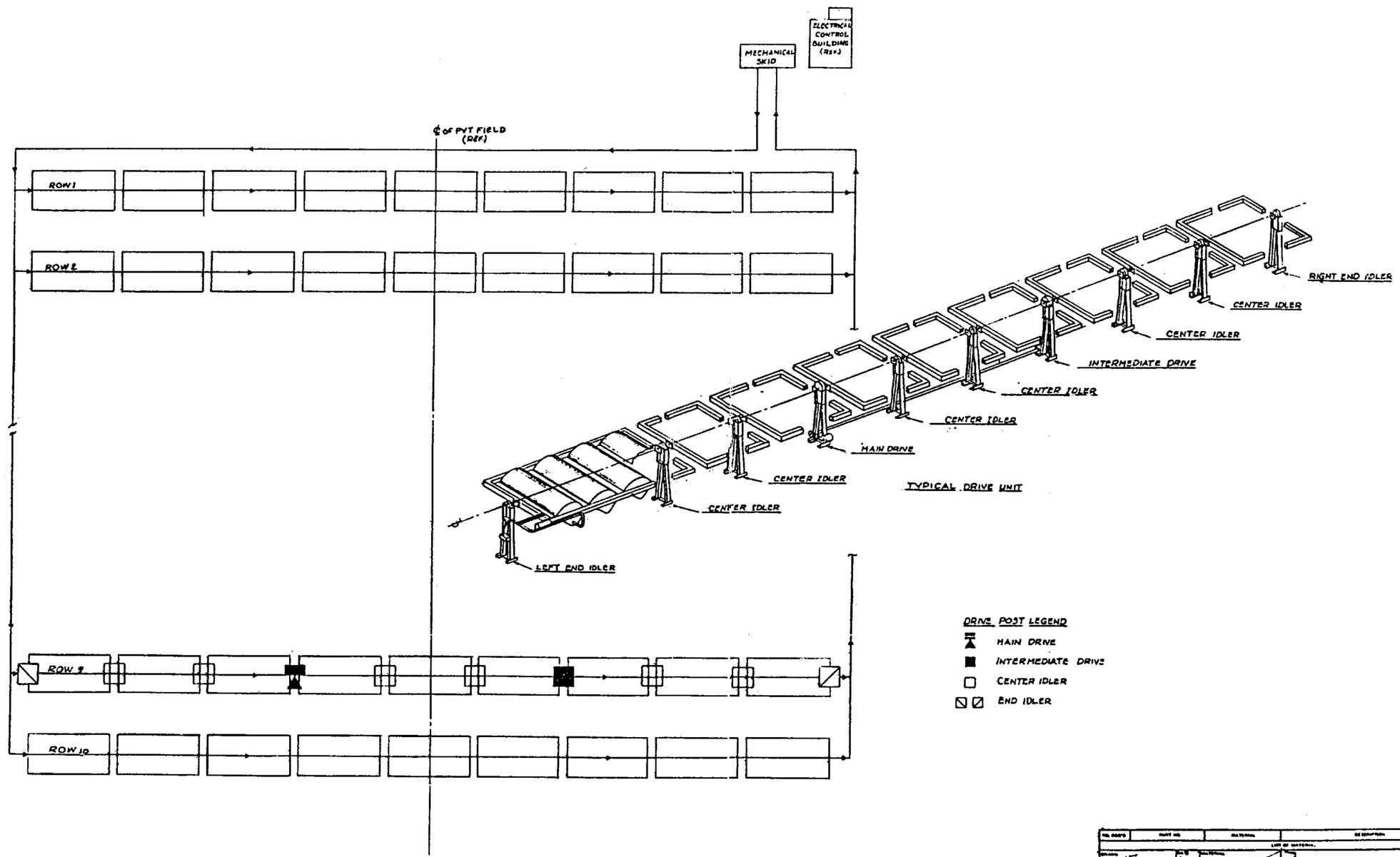

COLLECTOR ARRAY LAYOUT

FRESNO HOSPITAL P.V.T.
FRESNO, CALIFORNIA

52308 | F | 02 F001833

SCALE NONE | SHEET 11

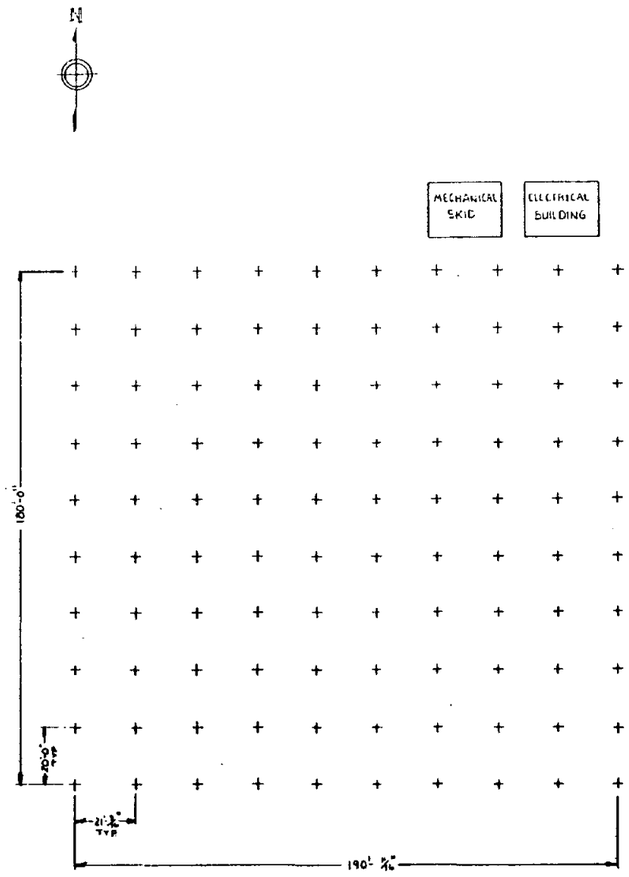

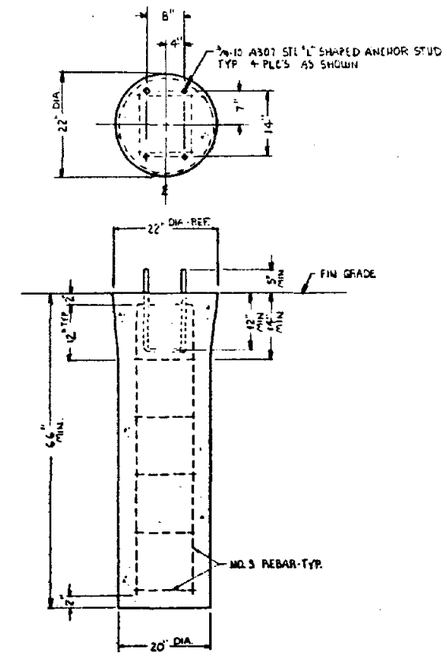

TYPICAL FOUNDATION PIER DETAIL
SCALE: 1" = 1'-0"

BOM

COLLECTOR PIER LAYOUT

FRESNO HOSPITAL P.V.T.
FRESNO, CALIFORNIA

52308 | 02 F00 1833

SCALE – NONE | SHEET 12

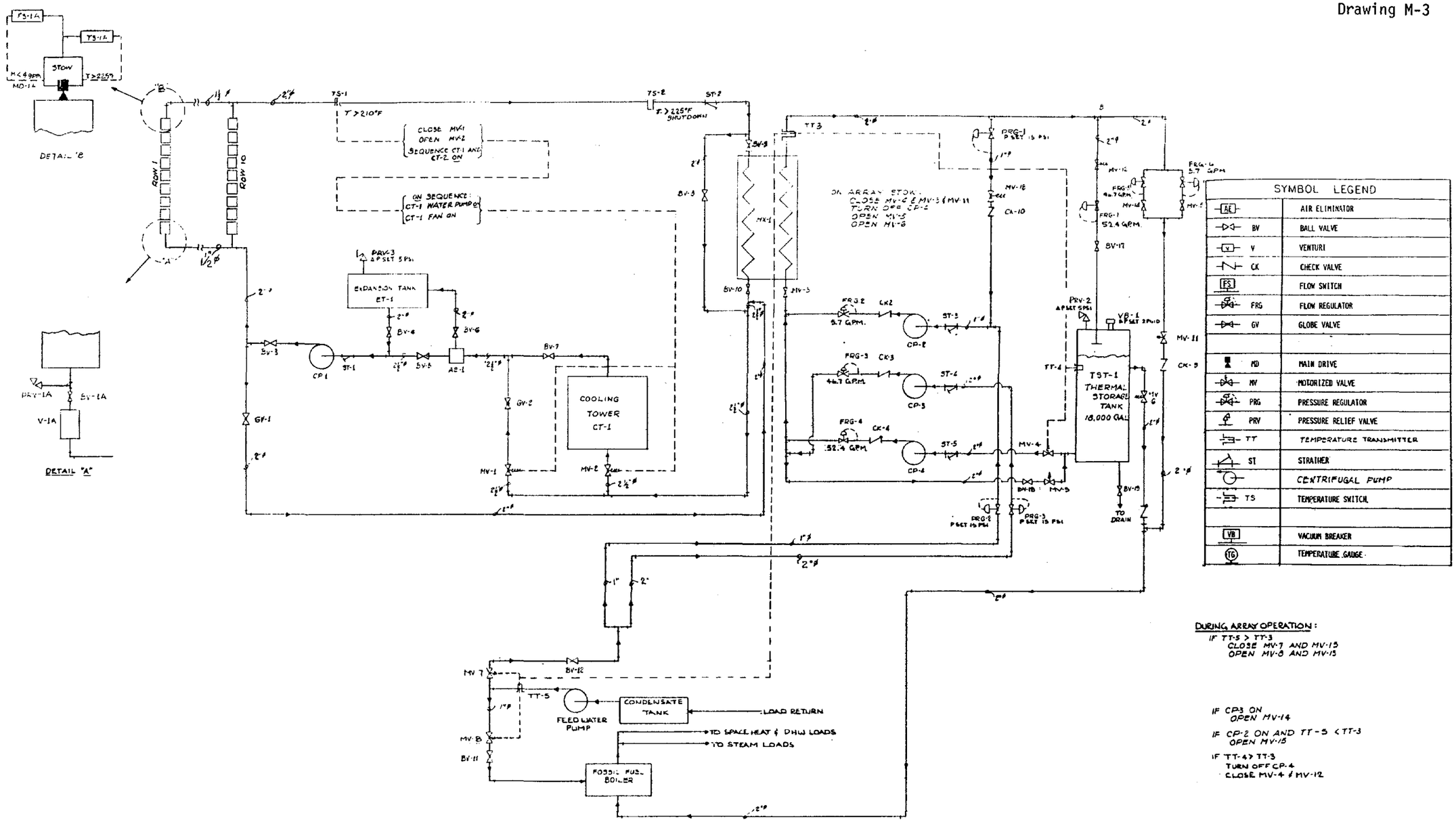

SYMBOL	LEGEND
AE	AIR ELIMINATOR
BV	BALL VALVE
V	VENTURI
CK	CHECK VALVE
FS	FLOW SWITCH
FRG	FLOW REGULATOR
GV	GLOBE VALVE
MD	MAIN DRIVE
MV	MOTORIZED VALVE
PRG	PRESSURE REGULATOR
PRV	PRESSURE RELIEF VALVE
TT	TEMPERATURE TRANSMITTER
ST	STRAINER
	CENTRIFUGAL PUMP
TS	TEMPERATURE SWITCH
VB	VACUUM BREAKER
TG	TEMPERATURE GAUGE

DURING ARRAY OPERATION:
IF TT-5 > TT-3
CLOSE MV-7 AND MV-15
OPEN MV-8 AND MV-13

IF CP-3 ON
OPEN MV-14

IF CP-2 ON AND TT-5 < TT-3
OPEN MV-15

IF TT-4 > TT-3
TURN OFF CP-4
CLOSE MV-4 & MV-12

NO. REQ'D	PART NO.	MATERIAL	DESCRIPTION	ITEM NO.
LIST OF MATERIAL				

DRAWN 2 Mar. 83
CHECKED 1-16-83
DESIGNED
PROJ. ENGR.
PROGRAM MANAGER 3/14/83
MATERIAL
FINISH
TOLERANCES
UNLESS OTHERWISE SPECIFIED DIMENSIONS ARE IN INCHES CONTRACT ON DATE CENTER

BDM

TITLE
PIPING AND INSTRUMENTATION DIAGRAM
FRESNO HOSPITAL P.V.T.
FRESNO, CALIFORNIA

CODE IDENT 52308 | SIZE F | DWG. NO. 02 FOO 1833 | REV.
SCALE | SHEET 13

NEXT ASSY
APPLICATION

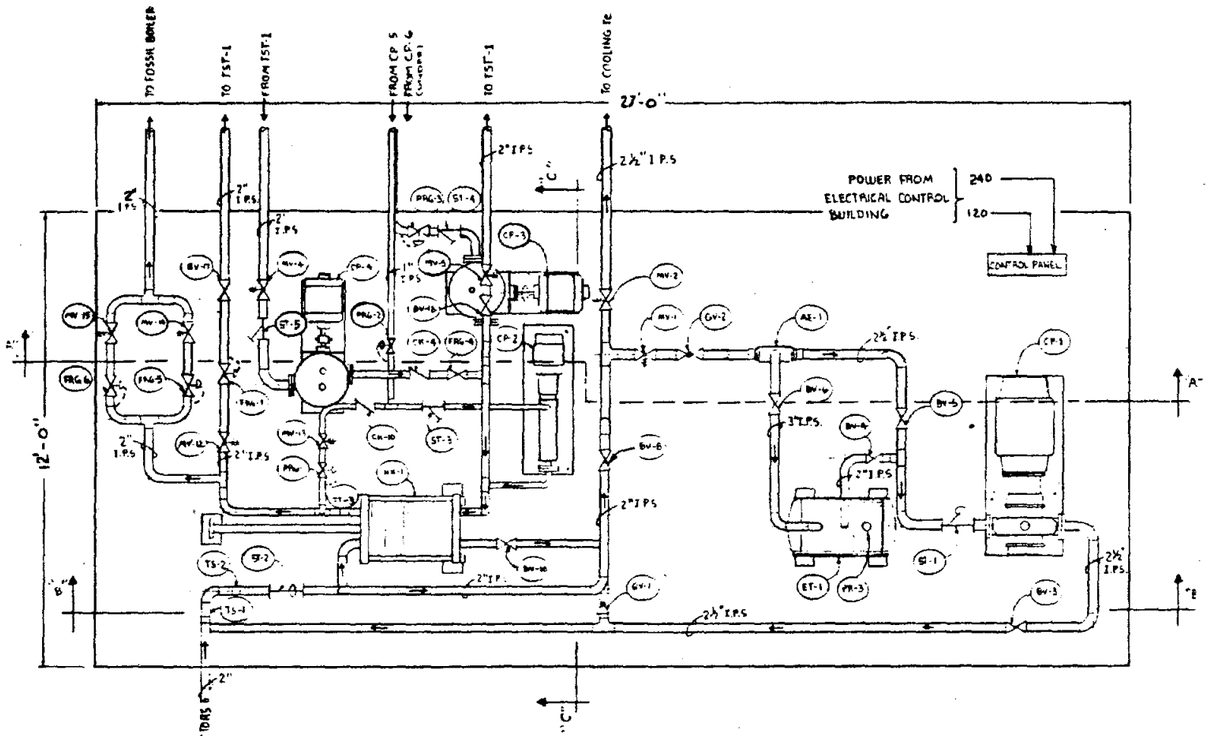

PLAN VIEW MECHANICAL

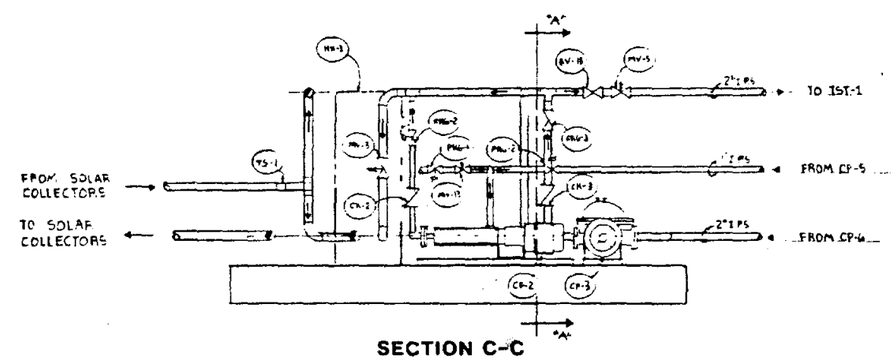

SECTION C-C

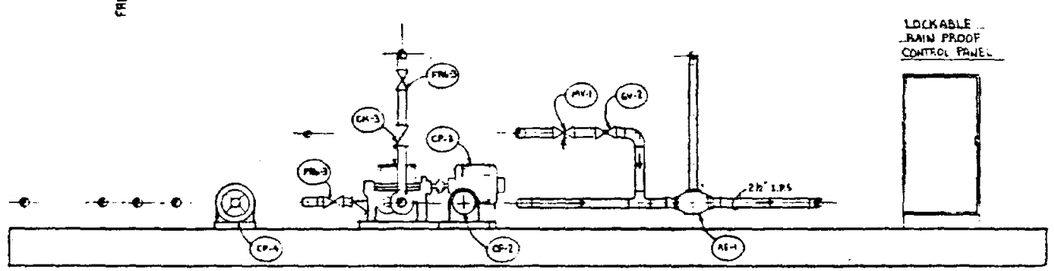

SECTION A-A

NOTES:

1. ALL PIPE TO PIPE FITTINGS TO BE SCHEDULE 40
2. ALL PIPE TO BE WRAPPED WITH ½" OF FIBERGLASS INSULATION WITH .016 THICK ALUMINUM JACKETING OVER.
3. INSULATION SHALL BE INSTALLED IN SUCH A MANNER AS TO PROVIDE ACCESS FOR THE OPERATION AND/OR ADJUSTMENT OF VALVES.

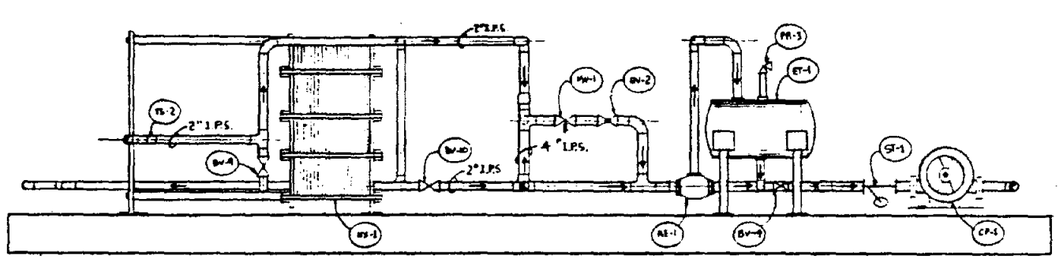

SECTION B-B

DRAWN	K COX	DATE 3/29/83	MATERIAL
CHECKED		2-25-83	
ENGINEER		4/20/83	FINISH
FINAL SHOP			
PROGRAM MANAGER		5/24/83	TOLERANCES

BDM CORPORATION

TITLE

MECHANICAL SKID

FRESNO HOSPITAL P.V.T.
FRESNO, CALIFORNIA

CODE IDENT	SIZE	DWG. NO	REV.
52308	F	02F001833	

SCALE ½" = 1'-0" SHEET 14

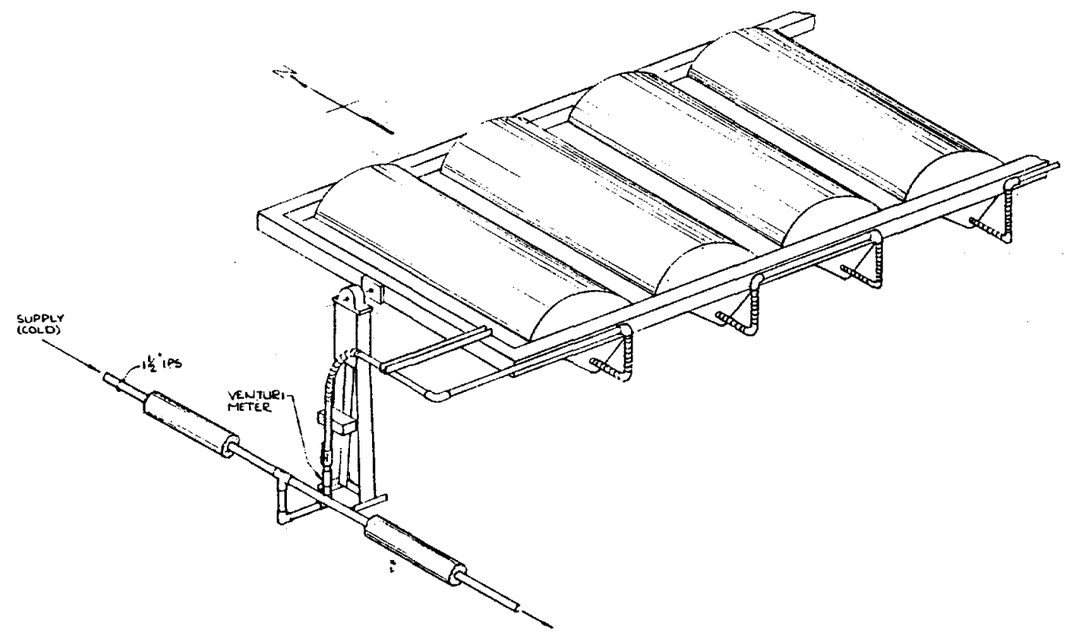

MANIFOLD DETAILS

FRESNO HOSPITAL P.V.T.
FRESNO, CALIFORNIA

52308 F 02 F001833

SHEET 15

Drawing M-6

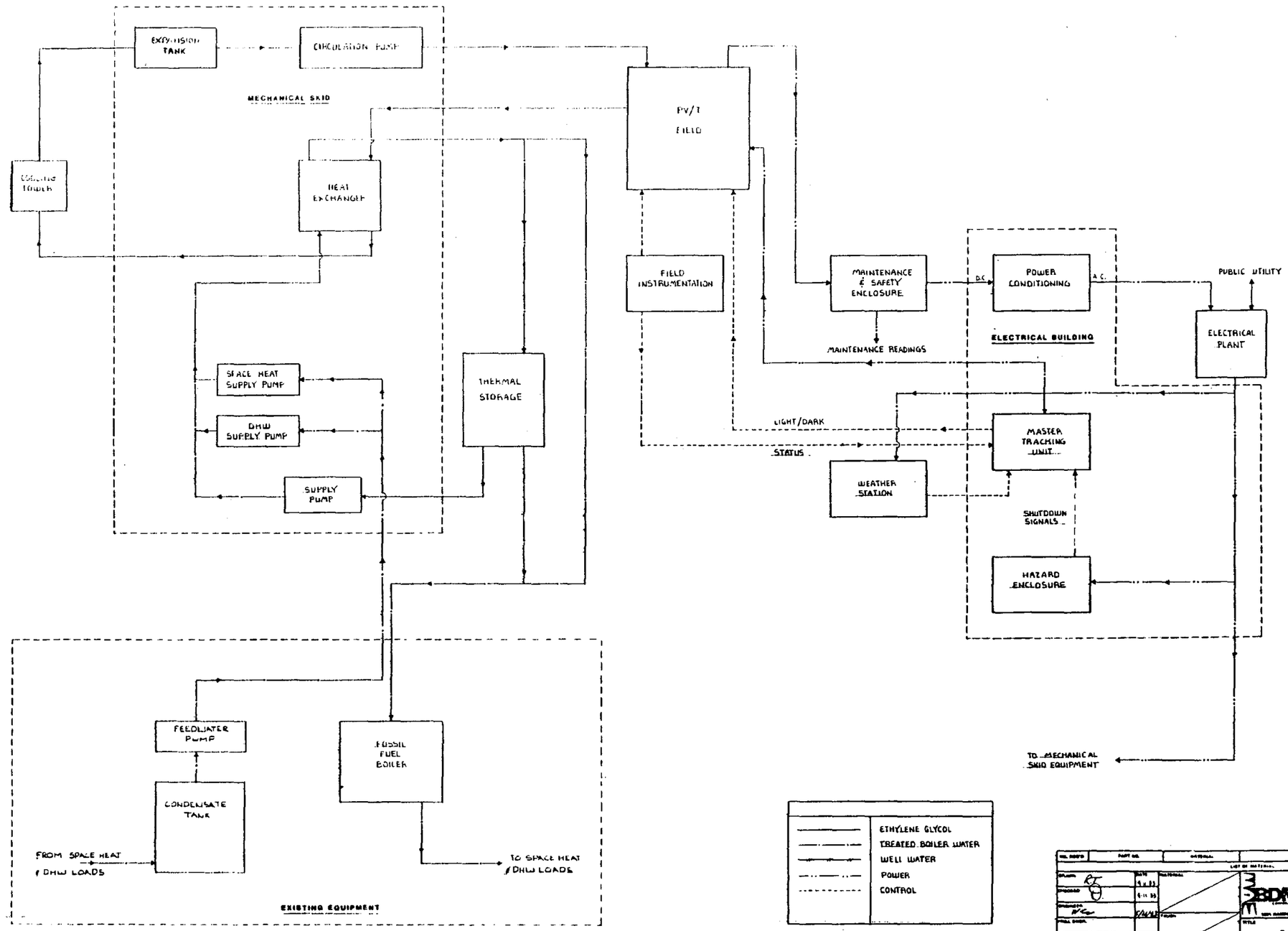

BDM

BLOCK FLOW DIAGRAM

FRESNO HOSPITAL F.V.T.
FRESNO, CALIFORNIA

52308 F 02 F00 1833

SCALE NONE

IV-179/80

CHAPTER V
TRADE-OFF STUDIES

A. INTRODUCTION

Design trade-offs have been performed for the three detailed designs discussed in the previous chapters. These trade-off analyses were performed using SOLCEL-III to determine the effect of changing various parameters on the LCCR. These parameters included the location, load characteristics, component size, and PV/T performance and cost. The base case is the design discussed earlier. All trade-off studies involve variations from this base design.

The purpose of these trade-off studies is to provide guidance with respect to the sensitivity of the design to various parameter changes. The effect of thermal storage versus no storage was discussed in the previous chapters. We found that applications with year-round nightime loads have improved LCCRs (i.e., improved economic feasibility) with storage, such as the meat-packing plant and the hospital. However, thermal storage is not appropriate for those applications with intermittent night loads, such as the Albuquerque school. Trade-off studies of row length and flow rate have also been performed and were discussed previously.

These trade-off studies were performed in order to develop the baseline designs. Subsequent studies which involve deviations from these baseline designs are discussed in the following sections.

B. DIXON, CALIFORNIA MEAT-PACKING PLANT

The LCCR versus array size for the base design is shown in figure V-1. The baseline design parameters are identified in table V-1, with the economic parameters indicated in tables III-19 through III-21 of volume I. Line focus Fresnel collectors are used for all designs and trade-off studies.

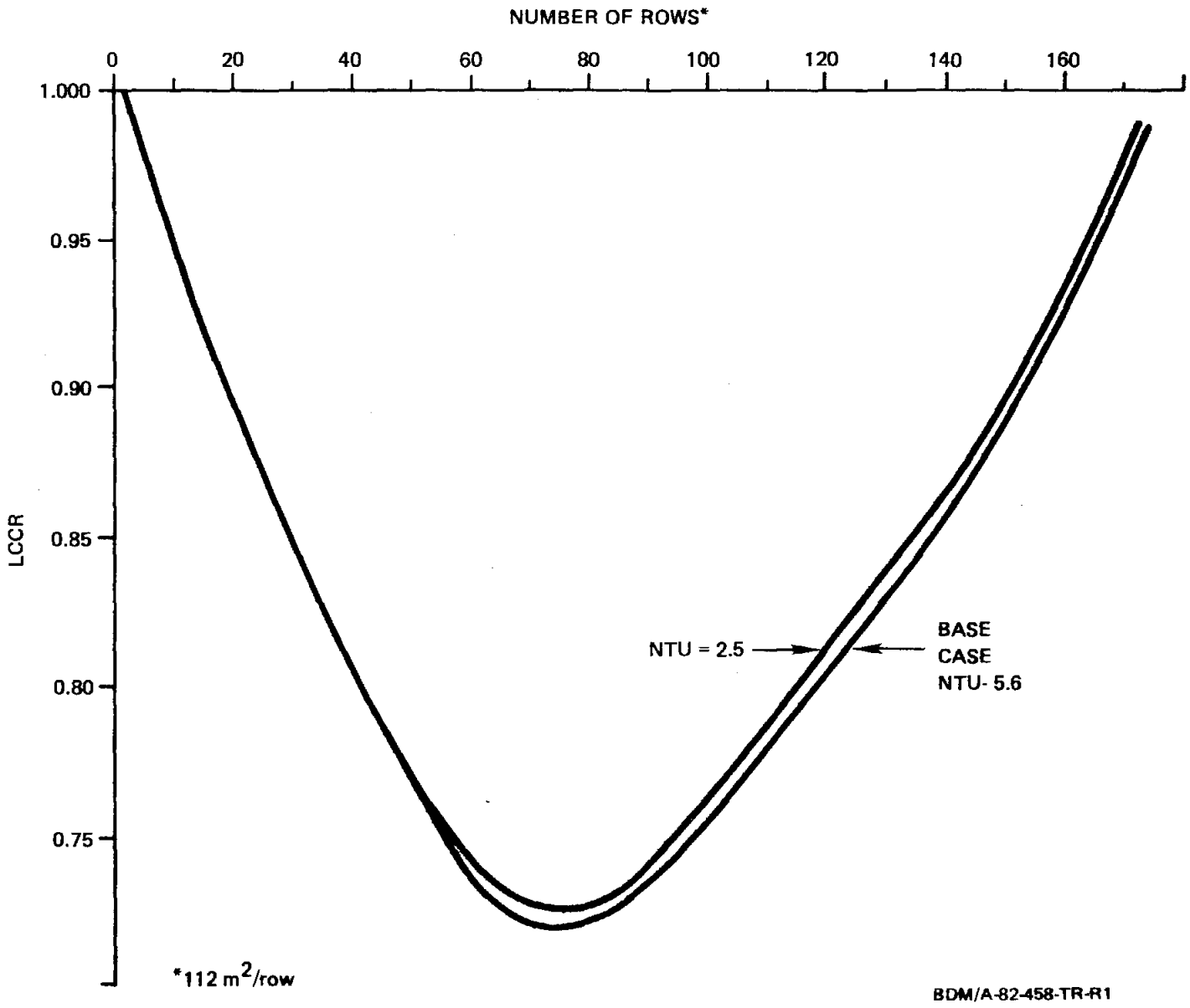

Figure V-1. Heat Exchanger Sizing Study for the Dixon Meat-Packing Plant

TABLE V-1. BASE CASE DESIGN PARAMETERS, FOR THE DIXON, CALIFORNIA MEAT-PACKING PLANT

Array Size: 720 Arrays (8064 m^2)
Arrays Per Row: 10
Array Cost: \$275/m^2 Installed
Cell Efficiency at NOCT: 18%
Heat Exchanger NTU: 5.6
Storage: 47,500 gal (178.8 m^3)
Sell-Back Ratio: 75%
Thermal Load Profile: Figure II-1
Electric Load Profile: Figure III-17, Volume I
Annual E/Q Ratio: 0.212

Figure V-1 shows the effect of decreasing the size of the heat exchanger, or decreasing the NTU of the heat exchanger from 5.6 to 2.5. The effect on the LCCR is negligible and there is no observable effect on the size of the field. As expected, figure V-2 shows that increasing the sell-back ratio improves the economics of the PV/T system, but the size of the field remains unchanged.

Figure V-3 shows the results of the collector cost study and the break-even cost of the collectors. For very small field sizes the LCCR is greater than unity indicating that insufficient energy is displaced to offset the cost of the system. As the field size increases, more energy is displaced and the system becomes economical as the LCCR becomes less than 1. As the field size increases further, its costs outweigh the energy which it can displace and the LCCR becomes greater than 1. For the Dixon plant the break-even cost for an installed array is about \$585/m^2 at a field size of about 15 rows (or about 1680 m^2).

At this break-even cost, the cell efficiency was increased from 18 to 25 percent with the results shown in figure V-4. This improvement in efficiency shows only a slight improvement in LCCR with a slight increase in field size from 15 rows at break-even to about 20 rows.

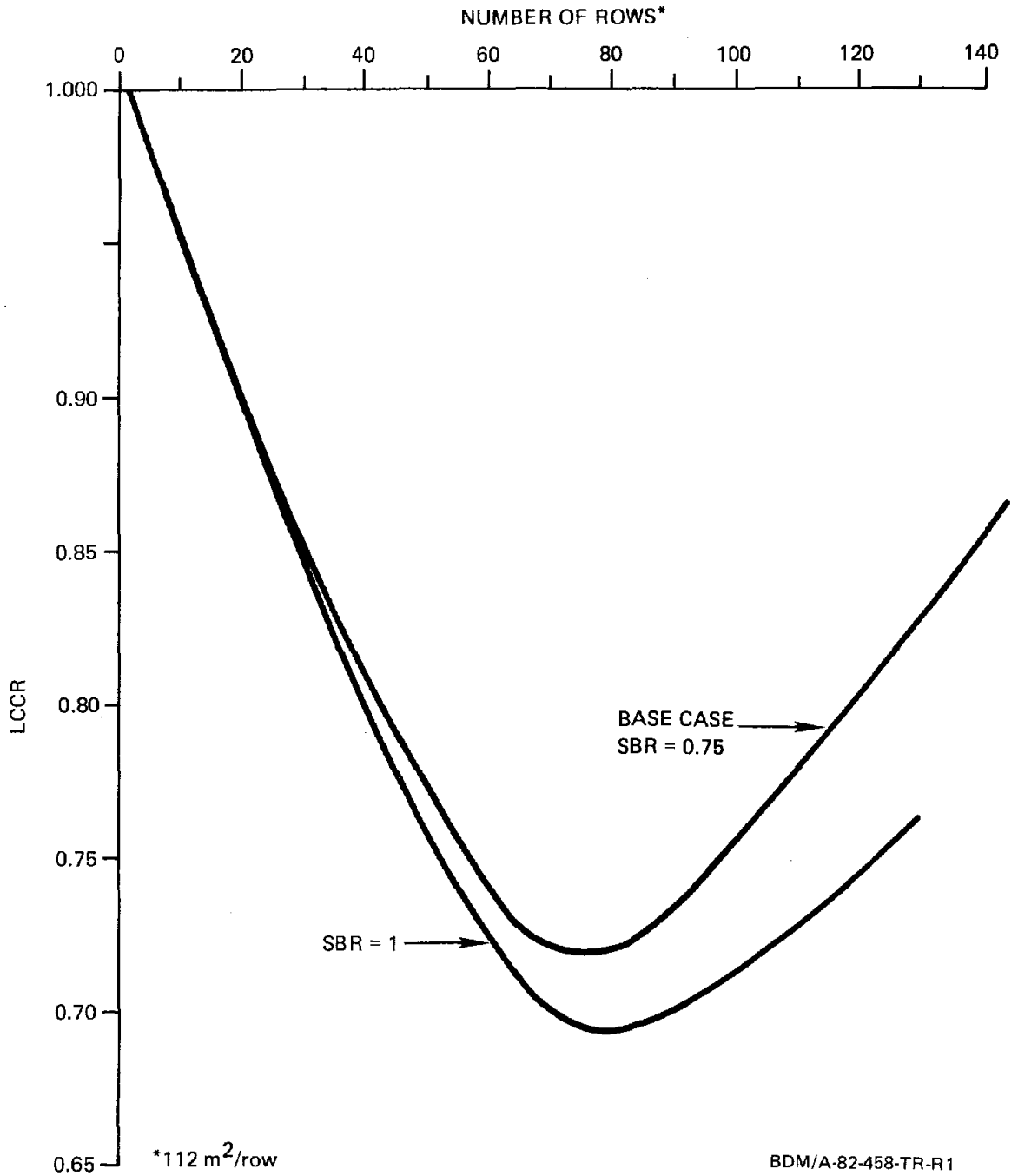

Figure V-2. Sell-Back Ratio Study for the Dixon Meatpacking Plant

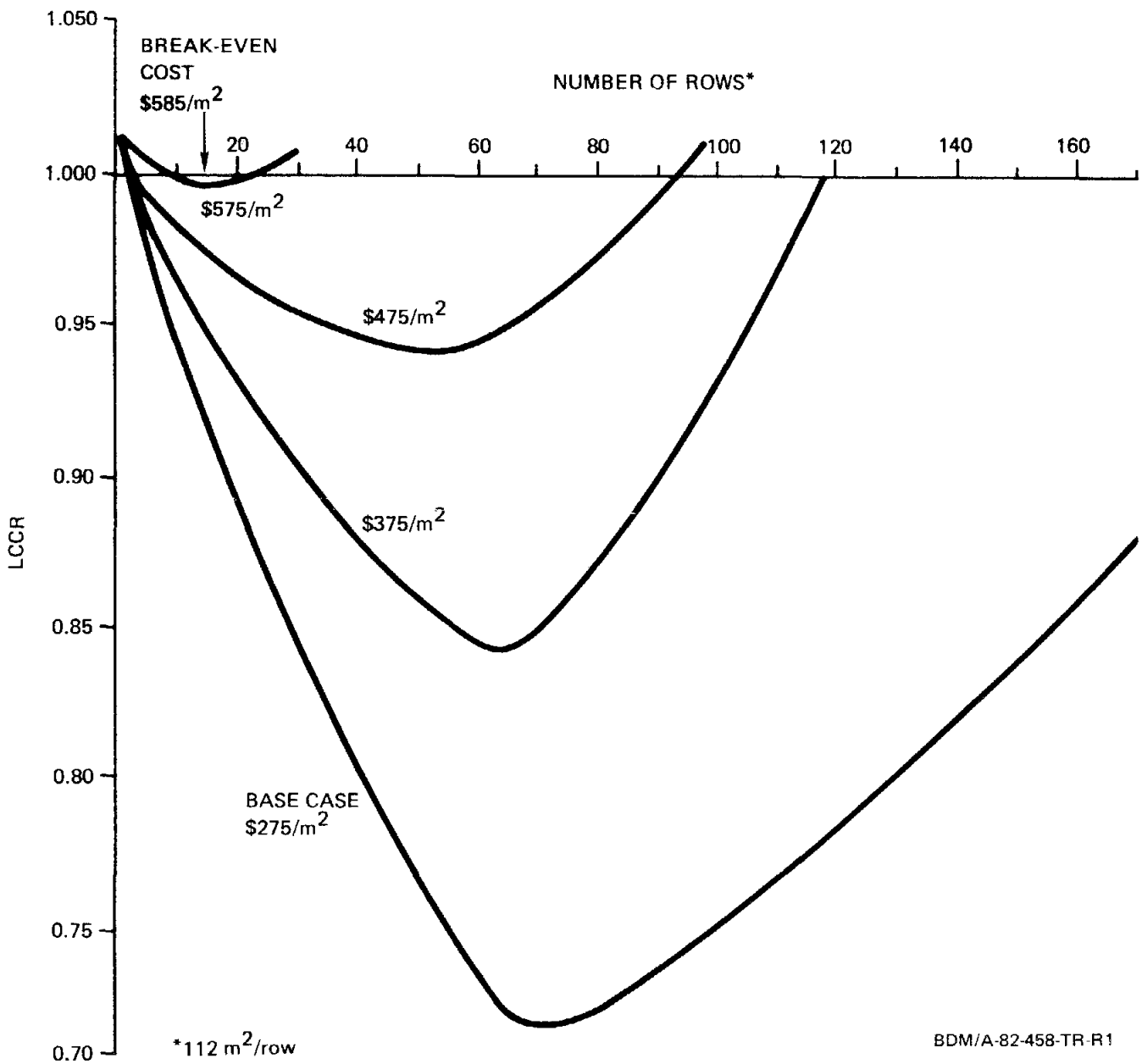

Figure V-3. Collector Cost Study for the Dixon Meatpacking Plant

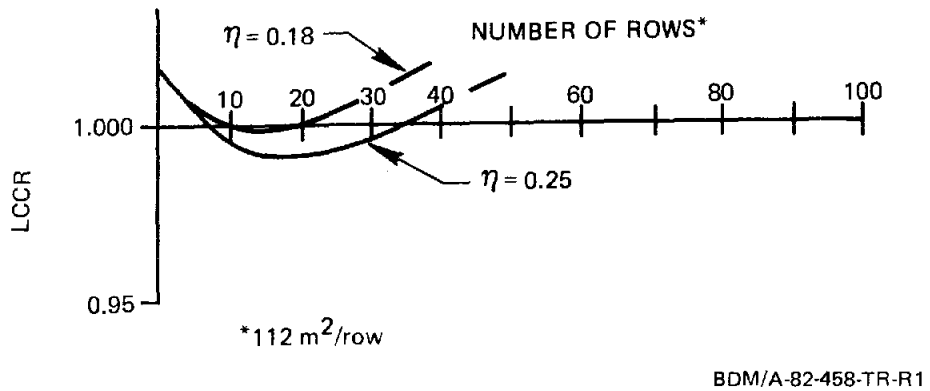

Figure V-4. Cell Efficiency Study at a Collector Cost of $585/m^2 for the Dixon Meatpacking Plant

Figure V-5 shows the effect of changing the phase of the load profile. In this case the load was shifted from a 6 a.m. start to a noon start. This decreased the LCCR and the field size to 65 rows. By shifting the load such that a larger fraction of the energy requirements occurred at night, the energy produced by the additional 7 rows (the difference between 72 rows of the base case and 65 rows) could not be used efficiently in order to offset their cost. Since the field is smaller, more backup energy is required, thereby increasing the LCCR.

The next study was to vary the load magnitude. As shown in figure V-6, the thermal load was maintained constant while the electrical load was varied from 0.5 to 2 E (where E is the base case electrical load). The size of the field was independent of the electrical load; however, the LCCR increased as the electrical load increased relative to the thermal load. Increasing both the electrical and thermal load increased the LCCR, and significantly increased the optimum field size from 72 to 125 rows. If the size of thermal storage were increased commensurate with the thermal load, the LCCR should decrease accordingly. It should be kept in mind that thermal storage is maintained constant at the base case size throughout these studies.

The next study involved moving the baseline design from Dixon, California to two other sites shown in figure V-7. As indicated, the

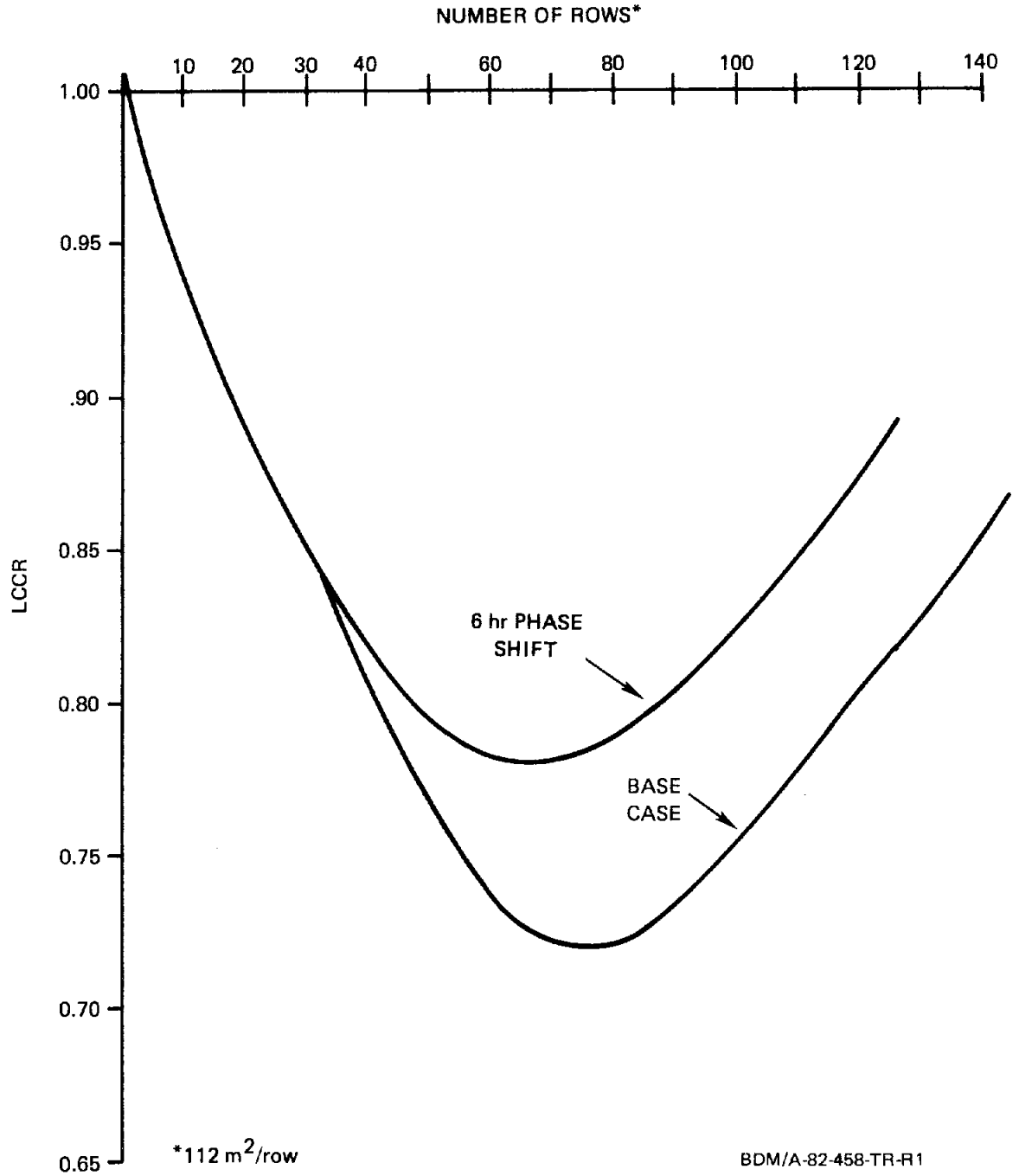

Figure V-5. Load Phase Shift Study for the Dixon Meatpacking Plant

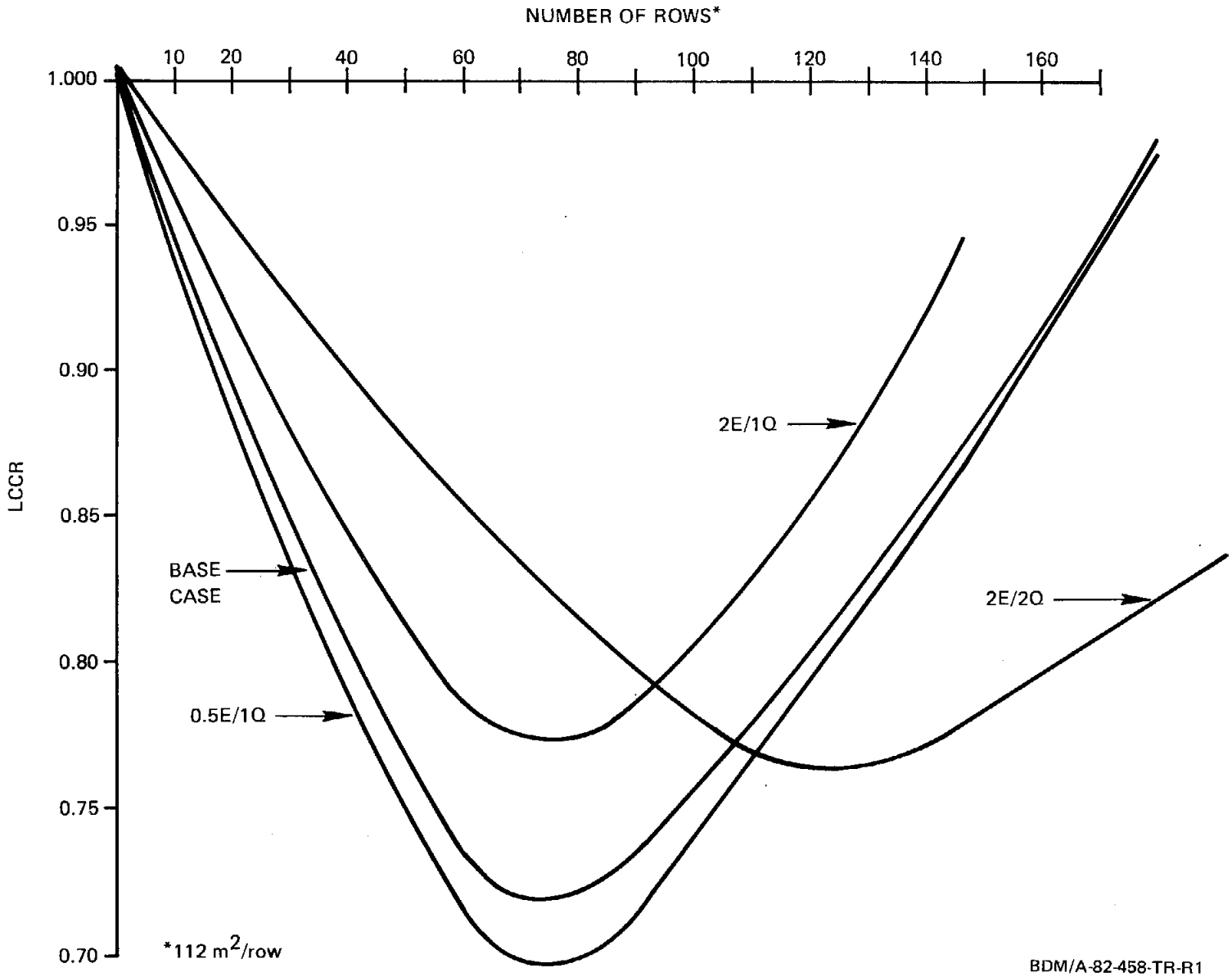

Figure V-6. Study of Ratio of Electrical to Thermal Annual Load Requirements for the Dixon Meatpacking Plant

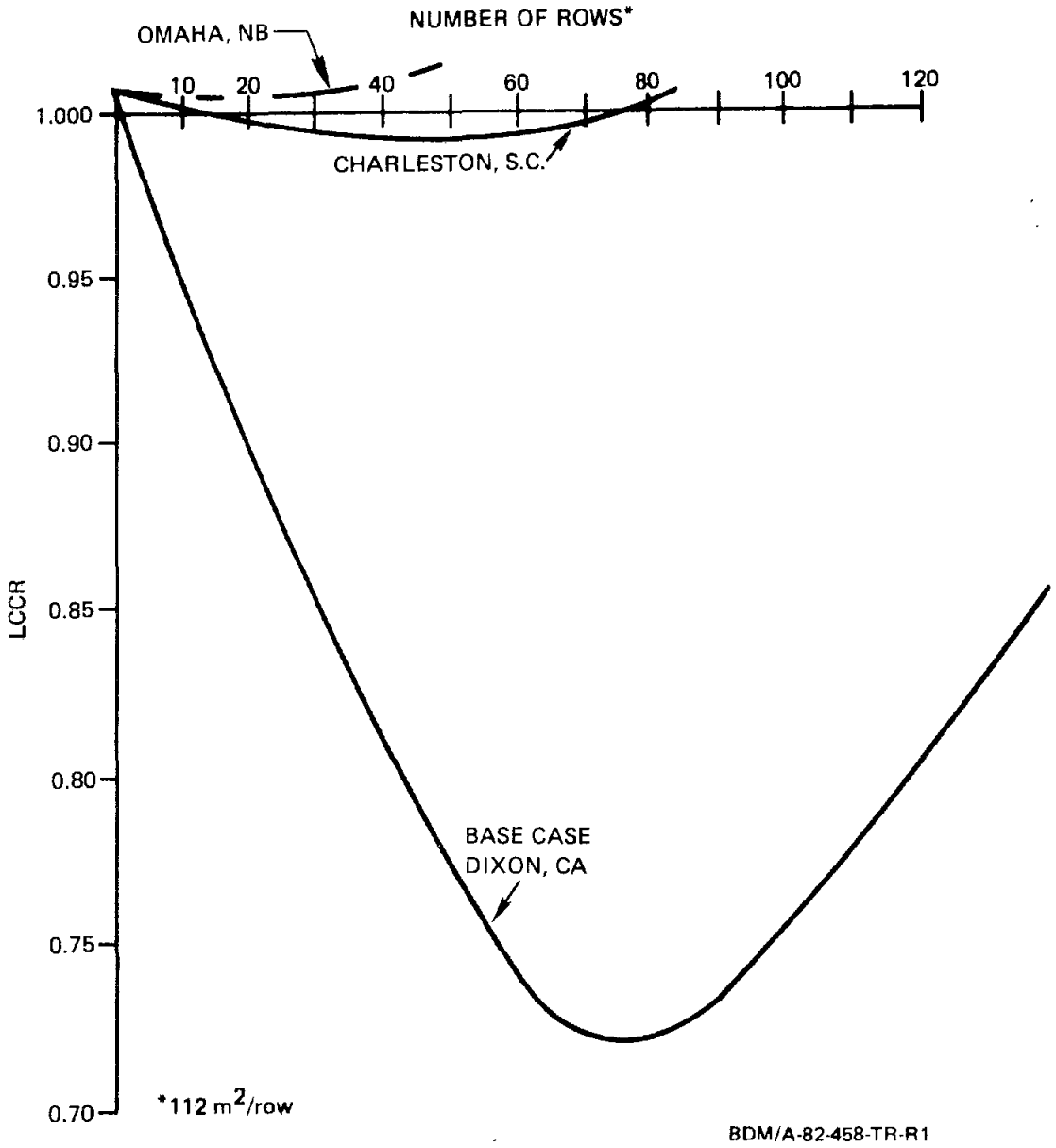

Figure V-7. Site Study for the Dixon Meat-Packing Plant

site has a very significant effect on the size of the field and the economic feasibility of PV/T for the given application.

C. ALBUQUERQUE, NEW MEXICO SCHOOL

The baseline design parameters are identified in table V-2, with the economic parameters indicated in tables III-19 through III-21 of volume I. Line focus Fresnel collectors are used for all designs and trade-off studies.

TABLE V-2. BASE CASE DESIGN PARAMETERS FOR THE ALBUQUERQUE, NEW MEXICO SCHOOL

Array Size: 72 Arrays (806.4 m^2)
Arrays Per Row: 9
Array Cost: \$275/m^2
Cell Efficiency at NOCT: 18%
Heat Exchanger NTU: 2.5
Storage: None
Sell-Back Ratio: 75%
Load Profiles: Figures III-8 and III-9, Volume I
Annual E/Q Ratio: 0.459

Figure V-8 shows the effect of changing the size of the heat exchanger. The initial sizing analysis assumed an NTU of 2.5 which gave an optimum field size of either eight or nine rows. The design NTU is 5.6 which gives an improved LCCR and increased field size of nine or 10 rows. Since the design was already under way with a field size of eight rows, the field size was not changed. Although the heat exchanger size was increased in the final design, the NTU was kept at 2.5 for these trade-off studies. Increasing the sell-back ratio from 0.75 to 1 decreases the LCCR and indicates an increase in the number of rows from eight to nine, as shown in figure V-9.

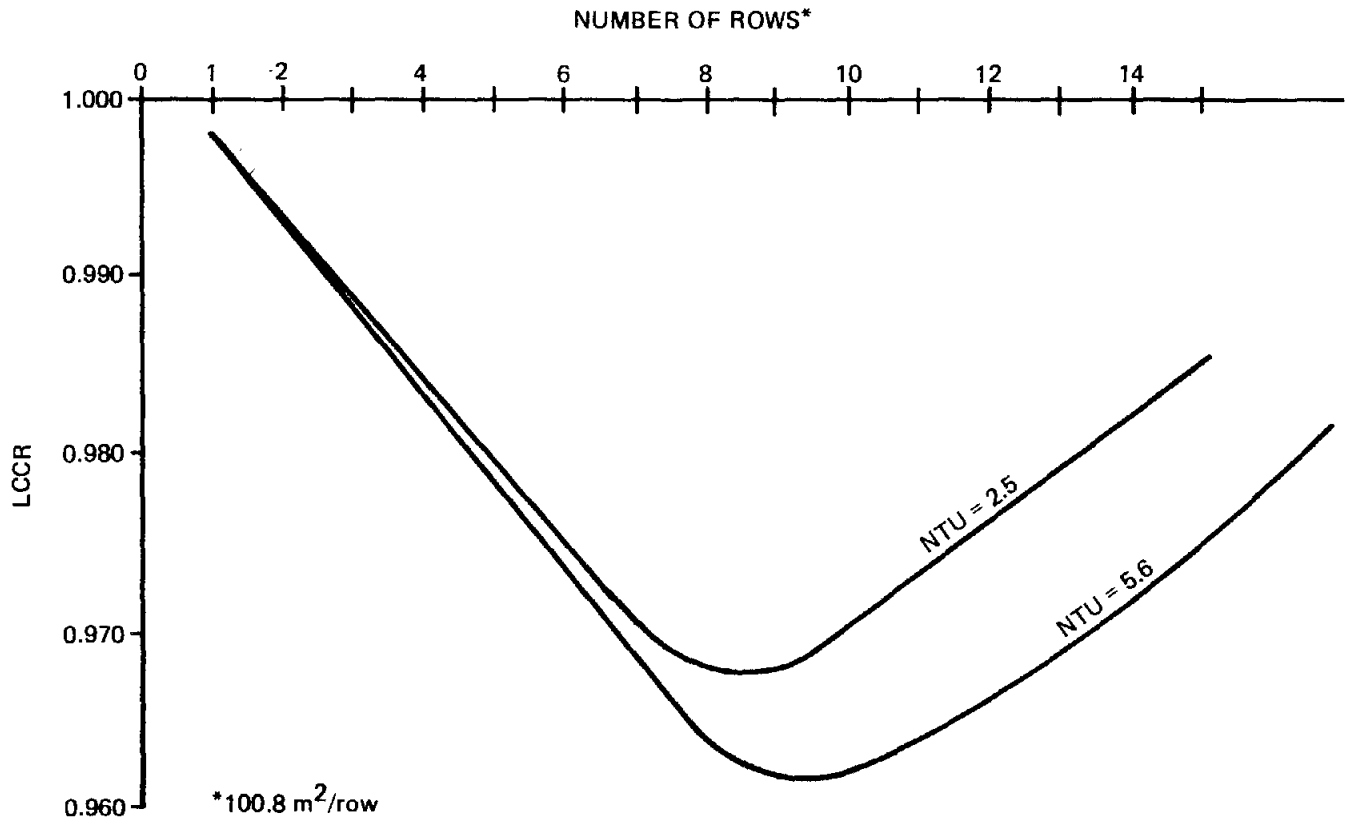

BDM/A-82-458-TR-R1

Figure V-8. Heat Exchanger Sizing Study for the Albuquerque School

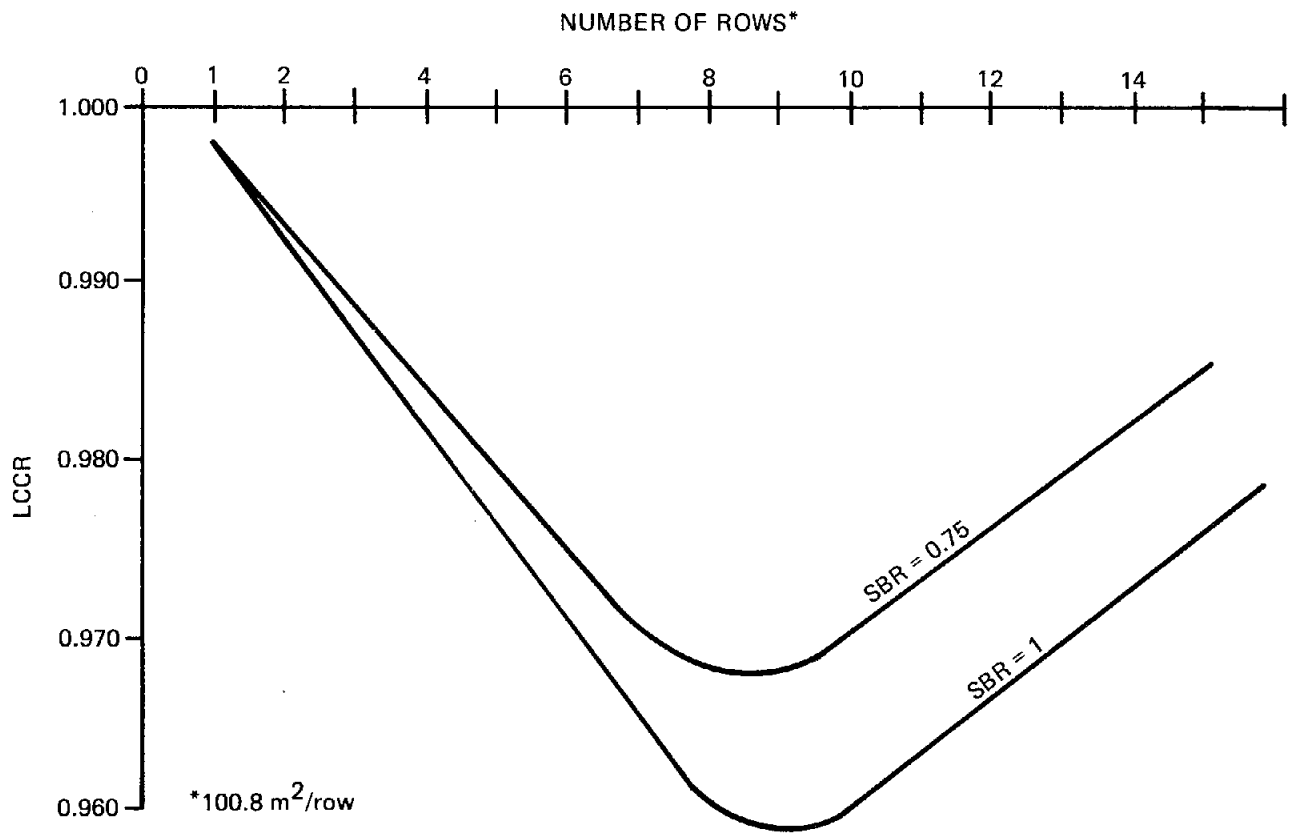

BDM/A-82-458-TR-R1

Figure V-9. Sell-Back Ratio Study for the Albuquerque School

The results of the collector cost study are shown in figure V-10. The break-even cost is $365/m^2 at a field size of four rows (403.2 m^2). Increasing the cell efficiency to 25 percent at a collector cost of $365/m^2 (figure V-11) showed an improved LCCR and an optimum field size of eight rows, a field increase of a factor of 2 over the break-even size.

Because the load profile of a commercial building, such as a school, depends on the environmental conditions at the site, it did not make sense to move the Albuquerque school profile to other sites; rather, profiles were developed for other sites, including Boston, Massachusetts. The results of the analysis for the Boston school are shown in volume I. Also, since commercial load profiles are strictly a function of the application and site, they could not be arbitrarily shifted in phase as is possible with industrial loads.

However, the magnitude of the load may be increased to simulate a larger school, or simulating an absorption chiller versus a vapor compression air conditioning system. The results of these studies are shown in figure V-12. As with the meat-packing plant, increasing the electrical load with respect to the thermal load increased the LCCR, and increasing both the thermal and electrical load increased the LCCR and increased the optimum field size. Again, it appears that the field size is influenced mainly by the thermal load.

D. FRESNO, CALIFORNIA HOSPITAL

The baseline design parameters for the Fresno, California hospital are identified in table V-3, with the economic parameters indicated in tables III-19 through III-21 of volume I. Line focus Fresnel collectors are used for all designs and trade-off studies.

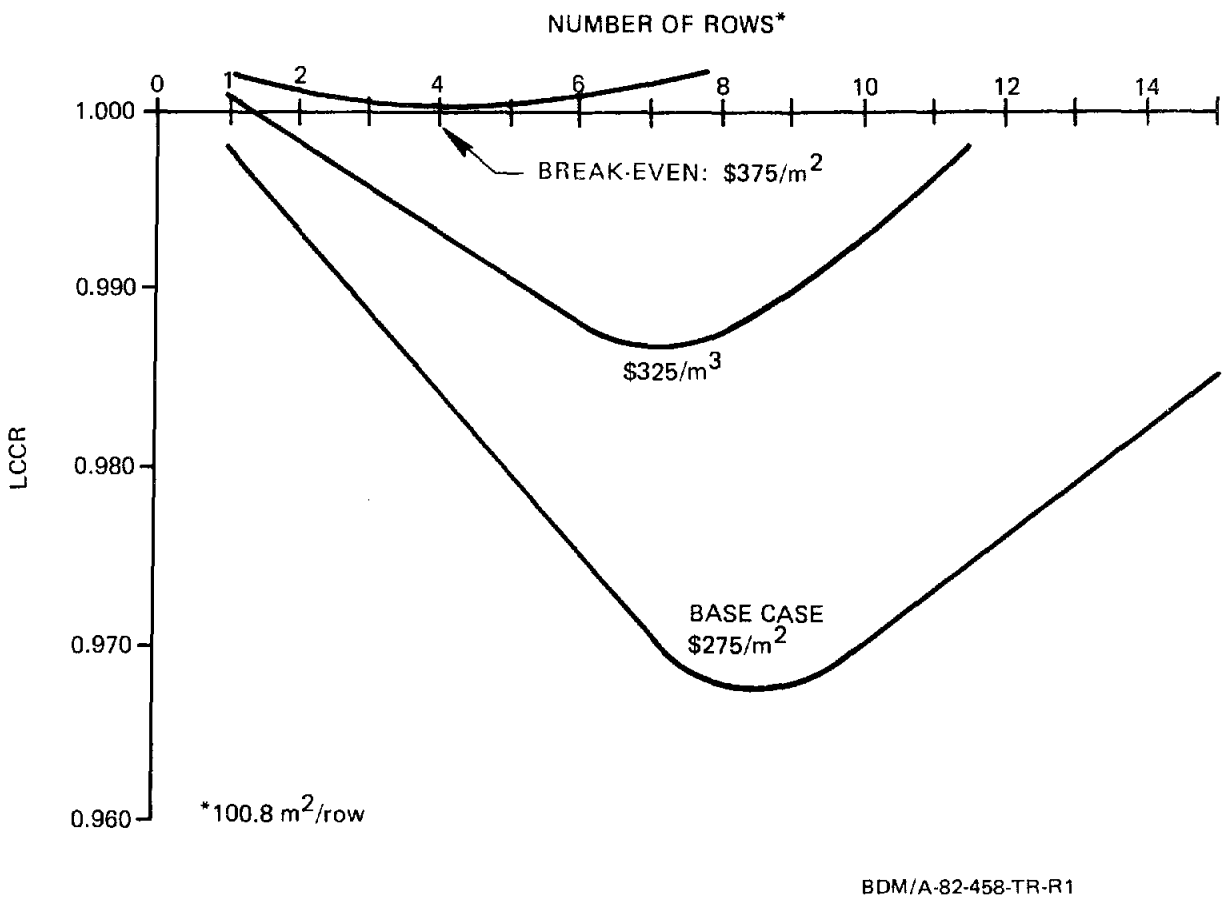

Figure V-10. Collector Cost Study for the Albuquerque School

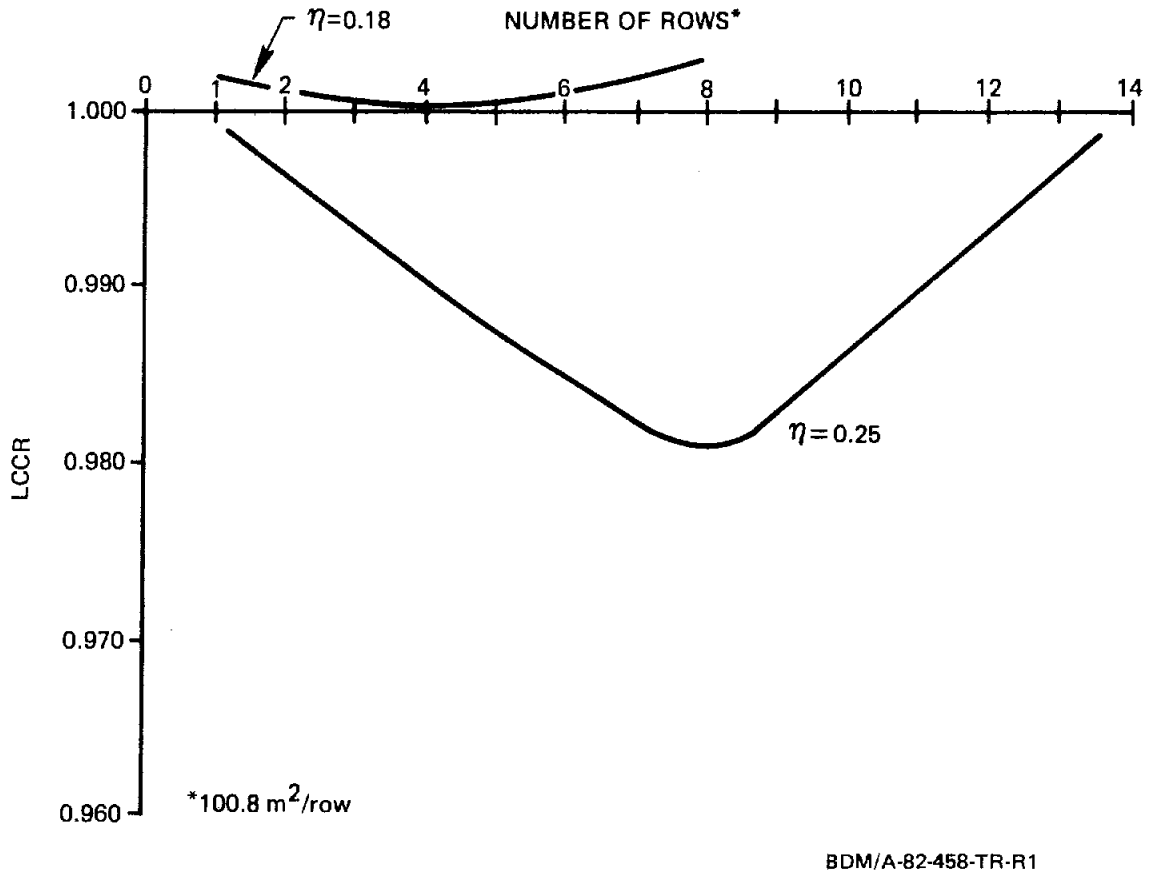

Figure V-11. Cell Efficiency Study at a Collector Cost of $365/m^2 for the Albuquerque School

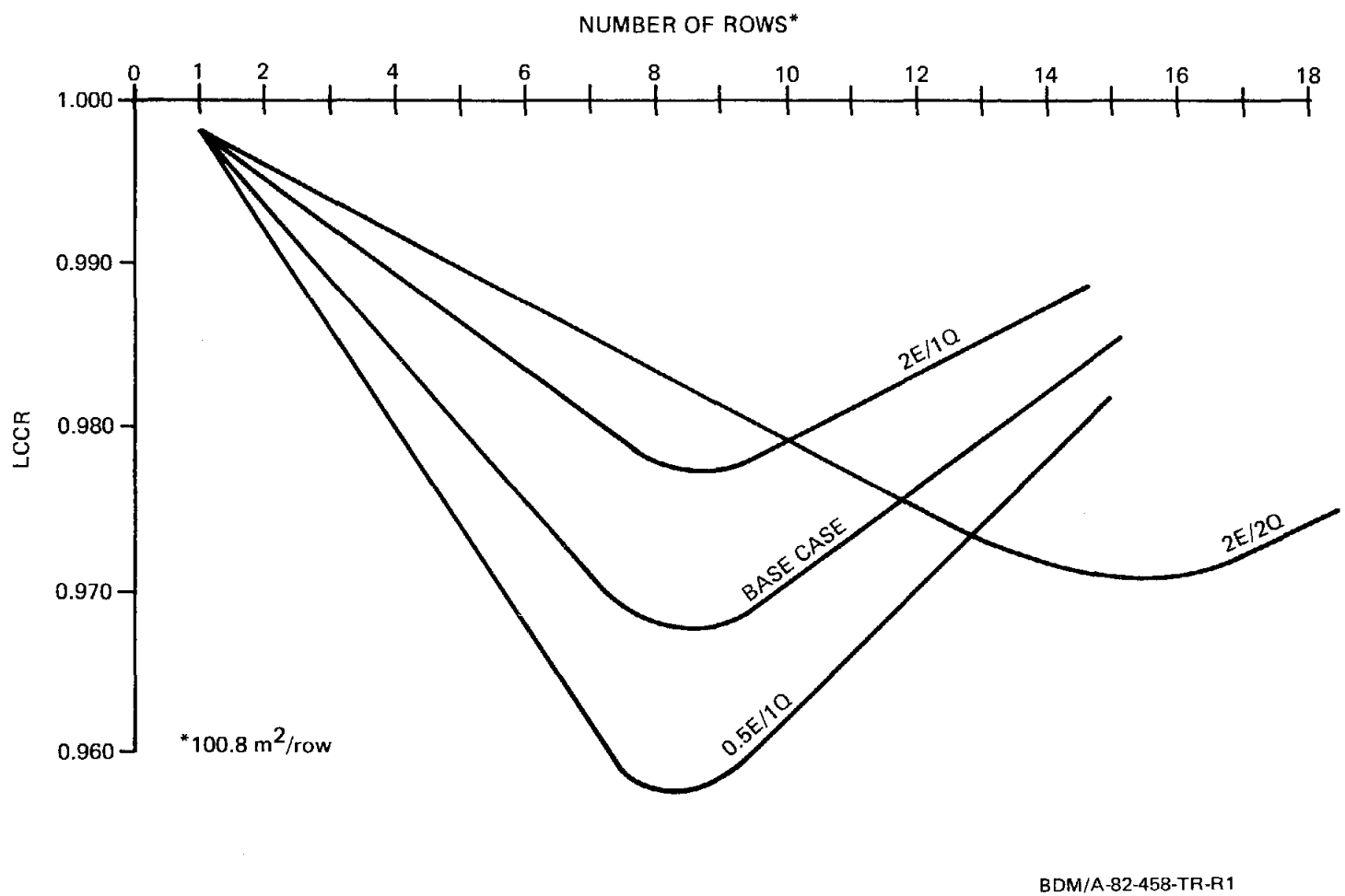

Figure V-12. Study of Ratio of Electrical to Thermal Annual Load Requirements for the Albuquerque School

TABLE V-3. BASE CASE DESIGN PARAMETERS FOR THE FRESNO, CALIFORNIA HOSPITAL

Array Size: 90 Arrays (1008 m^2)
Arrays Per Row: 9
Array Cost: \$275/m^2
Cell Efficiency at NOCT: 18%
Heat Exchanger NTU: 5.6
Storage: 68 m^3
Sell-Back Ratio: 75%
Load Profiles: Figures III-4 and III-5, Volume I
Annual E/Q Ratio: 0.821

Figure V-13 shows that increasing the heat exchanger size does not affect the size of the field, and has a small effect on the LCCR. For this site/application pair, increasing the sell-back ratio from 0.75 to 1 had no effect. The results of the break-even cost study are shown in figure V-14 with a break-even cost of \$385/m^2 at a field size of four rows (403.2 m^2). Increasing the cell efficiency to 25 percent increases the optimum field size to about nine rows, as shown in figure V-15.

Changing the relative magnitudes of the electrical and thermal loads from 0.5 to 2 E/Q indicates a small increase in field size from 10 to 12 arrays per row as shown in figure V-16. Like the school, the hospital load is site dependent. The results of the study of a Seattle, Washington hospital are presented in volume I.

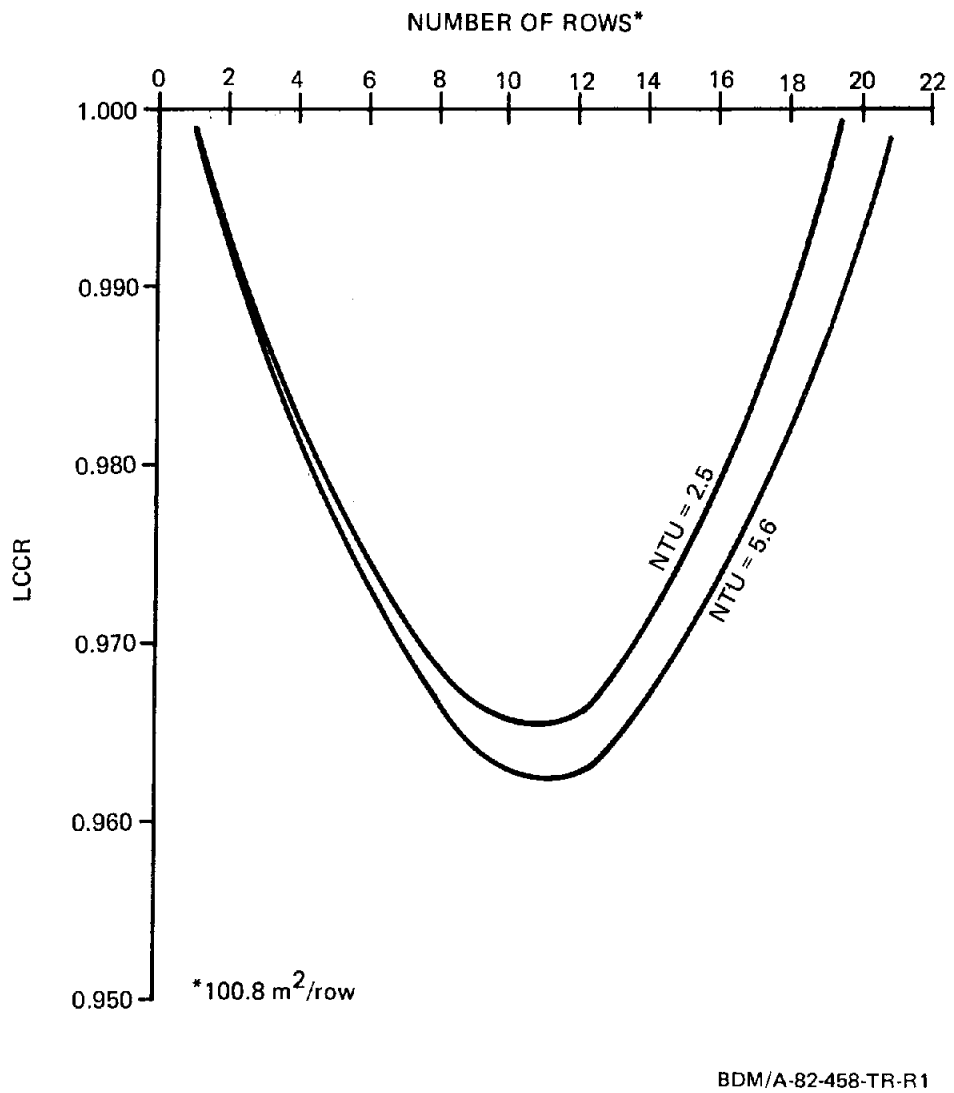

Figure V-13. Heat Exchanger Sizing Study for the Fresno Hospital

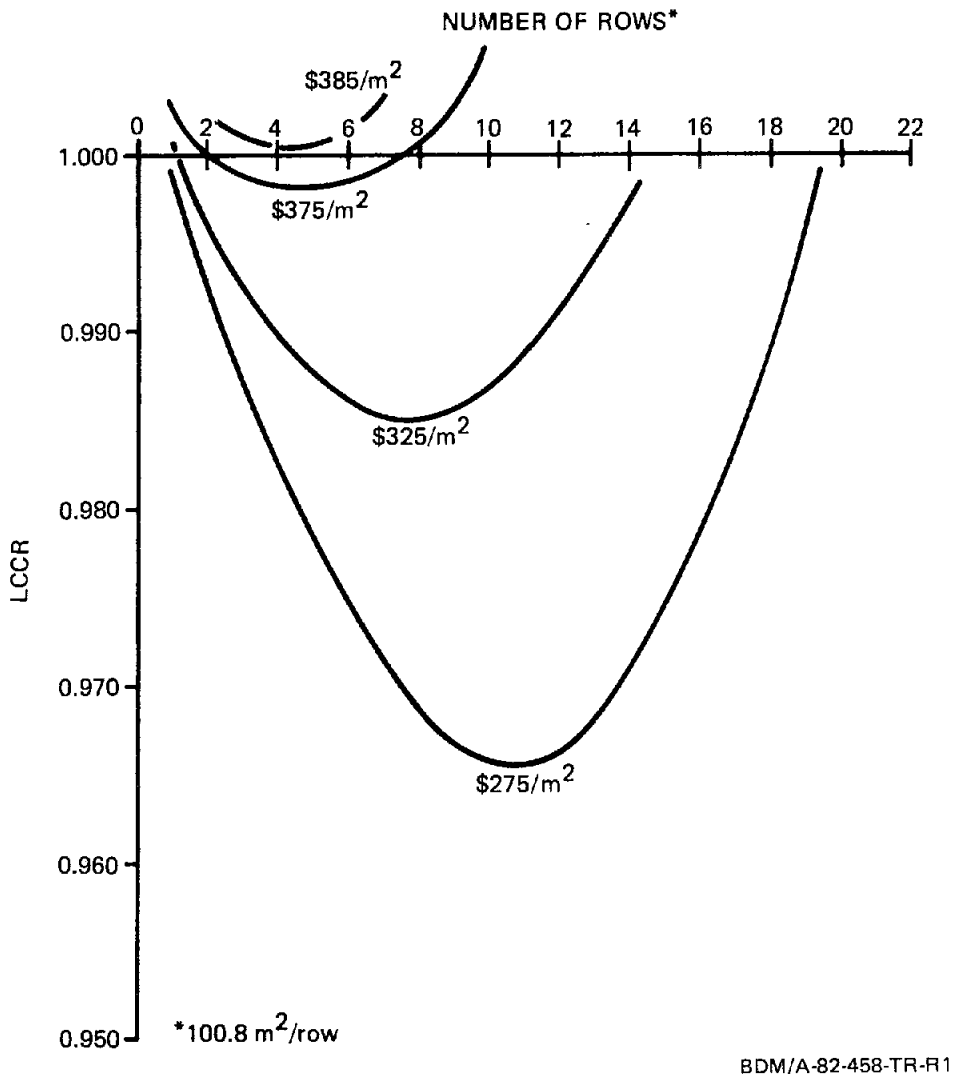

Figure V-14. Collector Cost Study for the Fresno Hospital

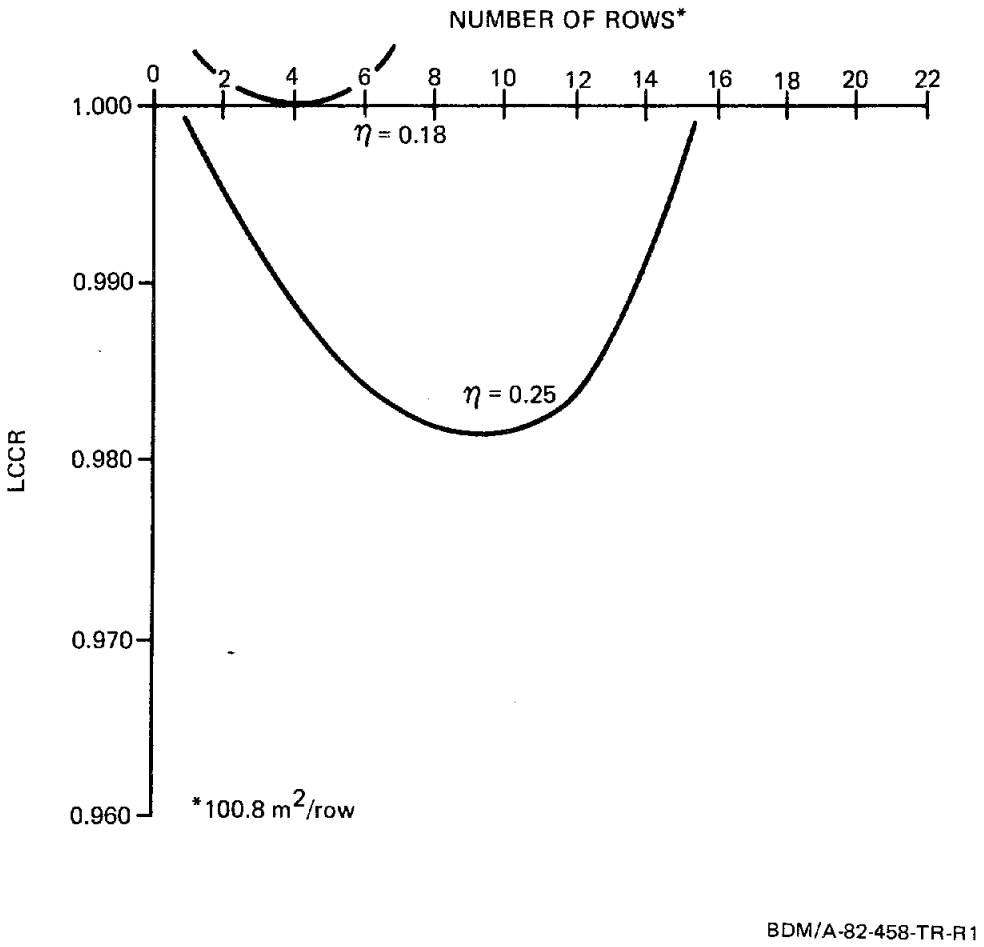

Figure V-15. Cell Efficiency Study at a Collector Cost of $385/m^2 for the Fresno Hospital

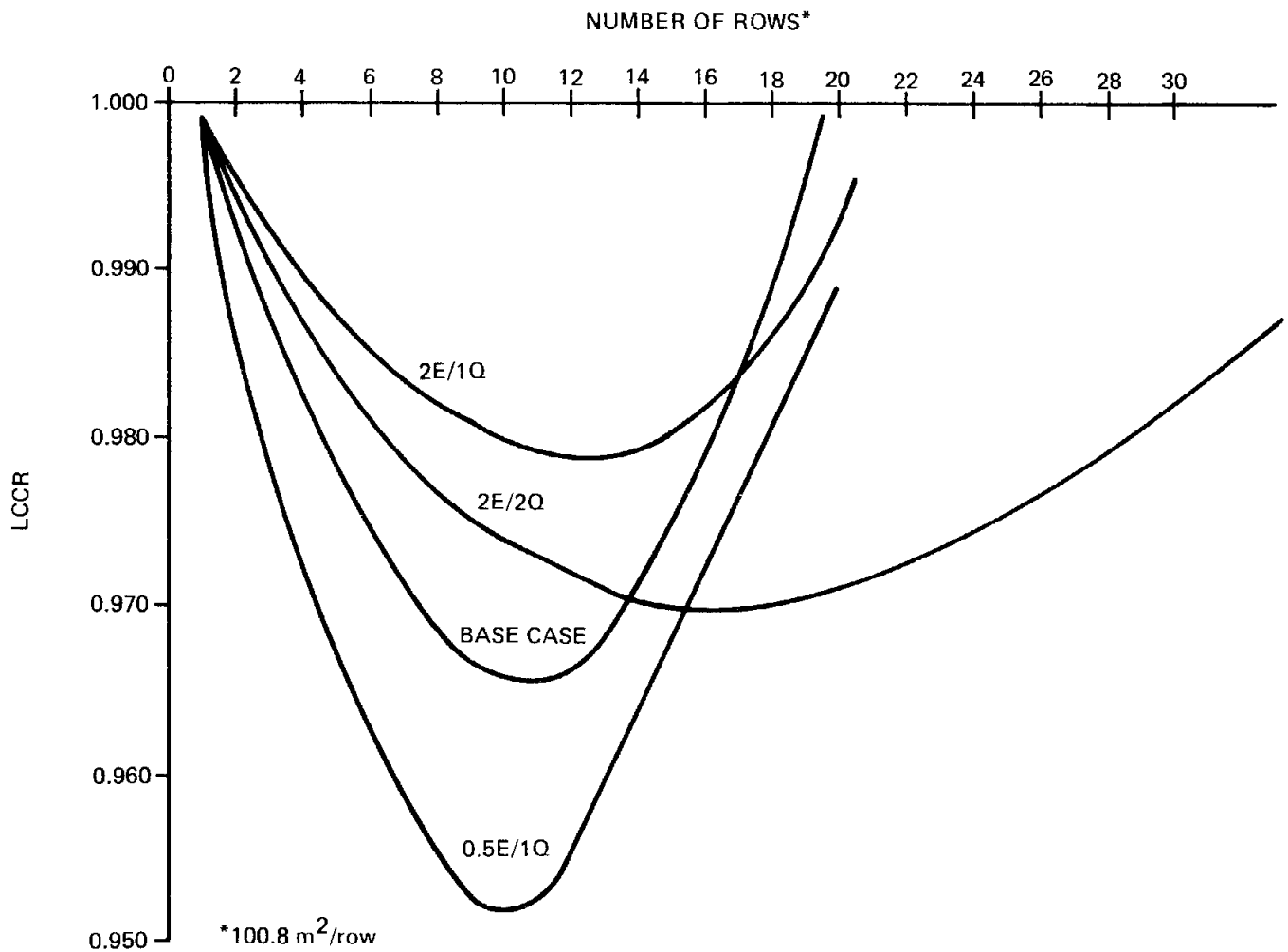

BDM/A-82-458-TR-R1

Figure V-16. Study of Ratio of Electrical to Thermal Annual Load Requirements for the Fresno Hospital

DIXON

P.V.T.

02F001831

DRAWING INDEX

SHT. NO.	TITLE
1	ELECTRICAL BLOCK DIAGRAM
2	ELECTRICAL FIELD SCHEMATIC
3	OUTDOOR SUBFIELD MAINTENANCE & SAFETY ENCLOSURE
4	INDOOR FIELD MAINTENANCE & SAFETY ENCLOSURE
5	A.C. ONELINE DIAGRAM
6	ELECTRICAL CONTROL BUILDING LAYOUT & ARRANGEMENT
7	FIELD COUNTERPOISE GROUNDING LAYOUT
8	
9	
10	
11	COLLECTOR ARRAY LAYOUT
12	COLLECTOR PIER LAYOUT
13	PIPING & INSTRUMENTATION DIAGRAM
14	MECHANICAL SKID
15	MANIFOLD DETAILS
16	BLOCK FLOW DIAGRAM
17	STORAGE TANK
18	
19	
20	

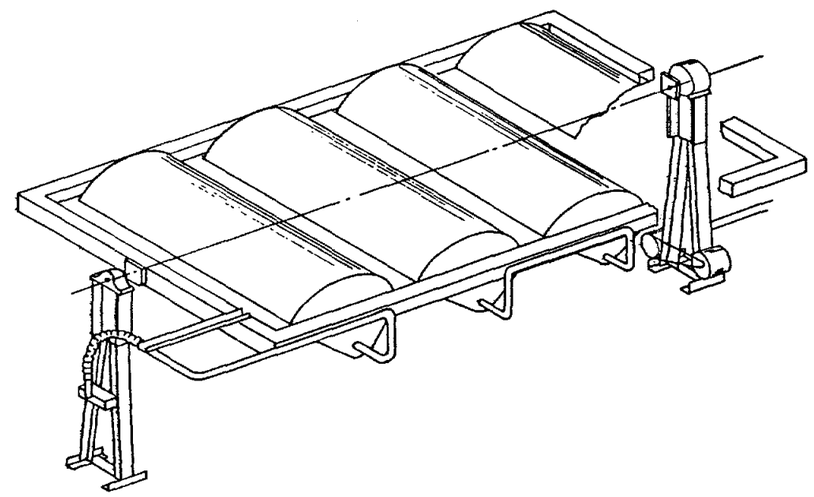

Drawing E-1

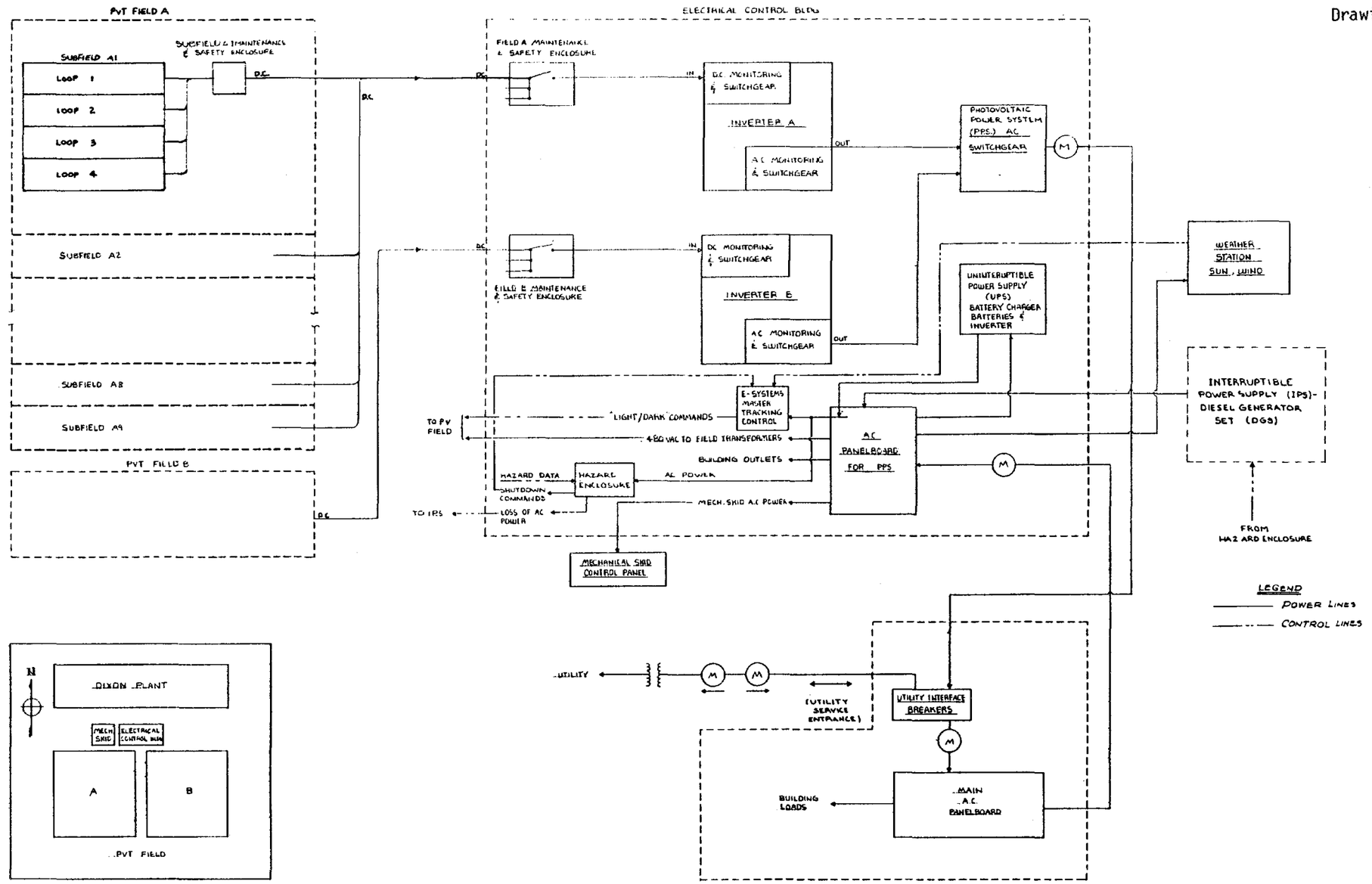

PVT/PLANT ORIENTATION

DRAWN	K. COK	9/1/82	
CHECKED		9-15-82	
ENGINEER		9-21-82	
PROJ. ENGR.			
PROGRAM MANAGER		9/21/82	

SBDM

TITLE: ELECTRICAL BLOCK DIAGRAM, DIXON PVT

DOCUMENT	SIZE	DWG. NO	REV
52308	F	02 F00 1831	

SCALE NONE SHEET 1

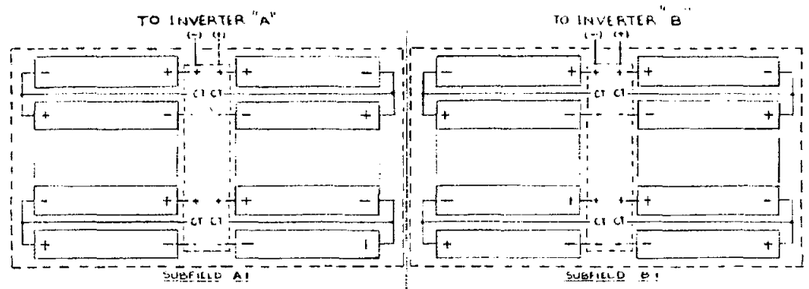

FIELD A

9 SUBFIELDS TOTAL

SUBFIELDS 1 & 9 SHOWN

FIELD B

9 SUBFIELDS TOTAL

SUBFIELDS 1 & 9 SHOWN

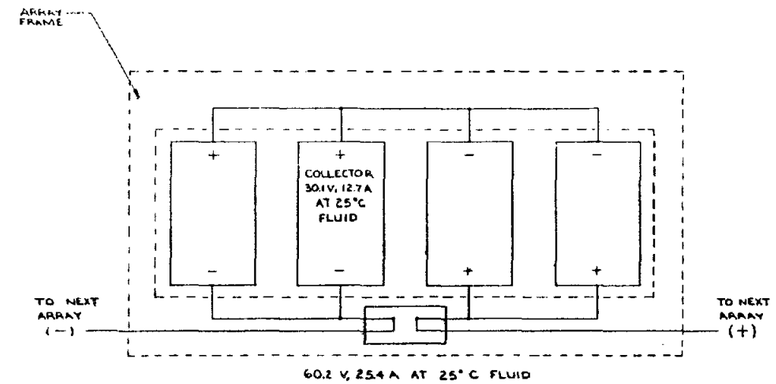

ARRAY

DETAIL "B"

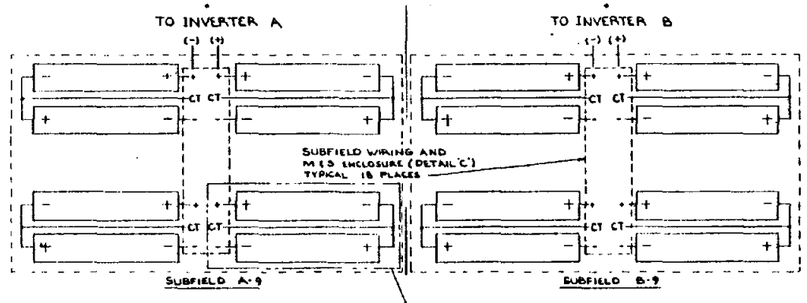

SUBFIELD WIRING AND M & S ENCLOSURE (DETAIL "C") TYPICAL 18 PLACES

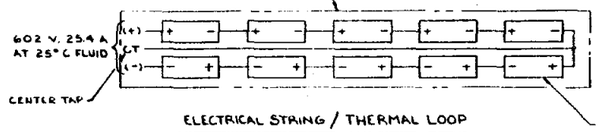

ELECTRICAL STRING / THERMAL LOOP

DETAIL "A"

RIGHT HAND AS SHOWN
LEFT HAND MIRROR IMAGE

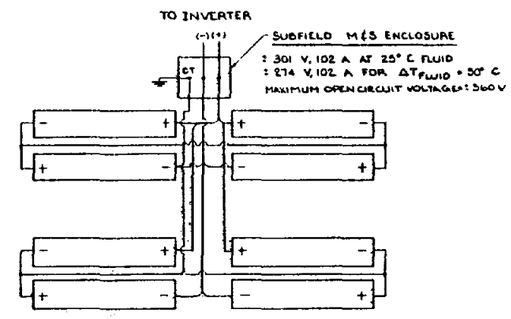

TYPICAL SUBFIELD WIRING AND M & S ENCLOSURE ⚠

DETAIL "C"

NOTE:

⚠ TERMINATE EACH END OF EACH STRING IN JUNCTION BOX AT END VERTICAL POST. DIRECT BURIAL CONDUCTORS TO BE IN CONDUIT FROM J-BOX TO UNDERGROUND CONDUIT TERMINATES TWO FEET BELOW GROUND. CONDUCTORS ARE ROUTED IN TRENCHES TO M/S ENCLOSURE WHERE CONDUIT TAKES CONNECTORS FROM UNDERGROUND TO ENCLOSURE.

NO. REQ'D	PART NO.	MATERIAL	DESCRIPTION	ITEM NO.

LIST OF MATERIAL

DRAWN HIRASUNA 9-8-82

CHECKED 9-15-82

ENGINEER 9-16-82

PROJ. ENGR.

PROGRAM MANAGER 9/16/82

MATERIAL

FINISH

TOLERANCES

UNLESS OTHERWISE SPECIFIED DIMENSIONS ARE IN INCHES CONTRACT OR DIST CENTER

TITLE ELECTRICAL FIELD SCHEMATIC

DIXON PVT

CODE IDENT 52308 SIZE F DWG. NO. 02 F00 1831 REV

SCALE NONE SHEET 2

NEXT ASS'Y

APPLICATION

Drawing E-3

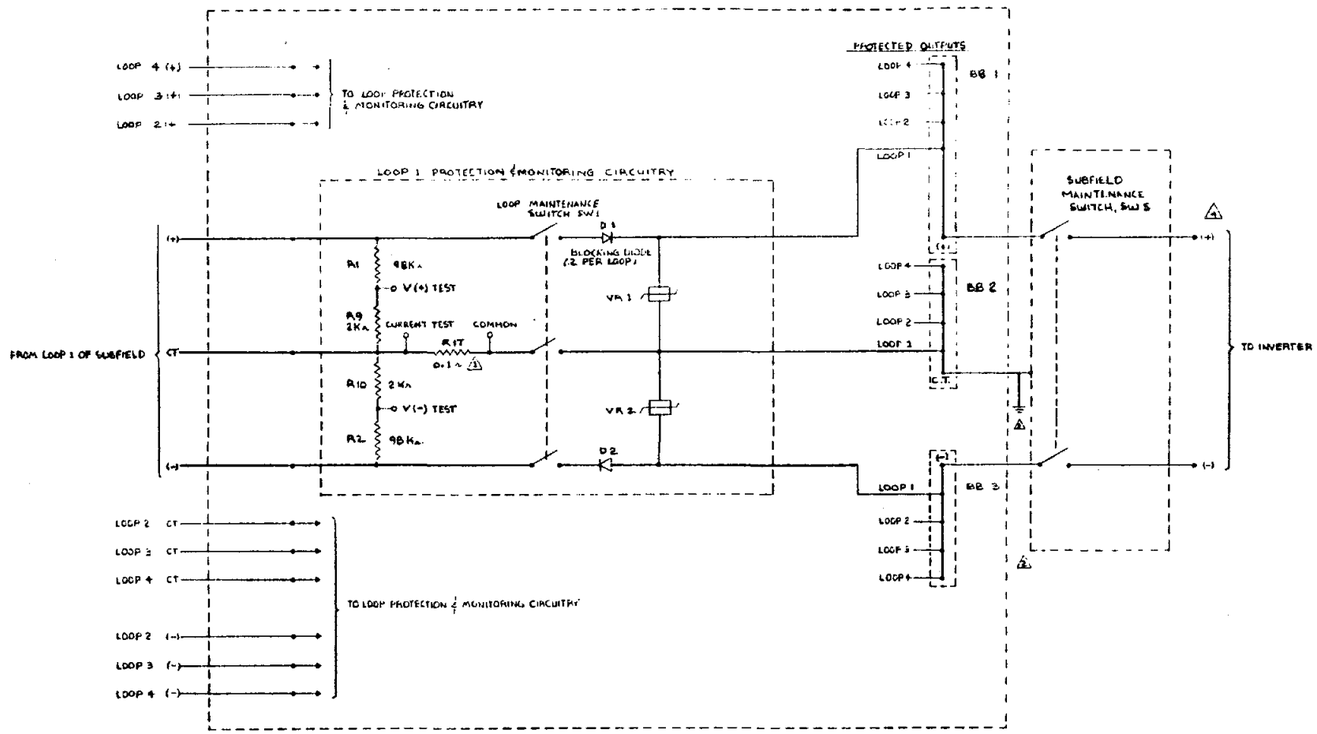

1. CURRENT SHUNT CARRIES NO CURRENT UNDER NORMAL OPERATION. IF LINES ARE NOT BALANCED DUE TO GROUND FAULT, BROKEN INTERCONNECTION, CELL FAILURES OR TRACKING ERRORS, CURRENT WILL FLOW THROUGH CURRENT SHUNT. CURRENT TEST POINT WILL BE POSITIVE WITH RESPECT TO COMMON IF NEGATIVE HALF-LOOP IS SHORTED BUT WILL BE NEGATIVE WITH RESPECT TO COMMON IF POSITIVE HALF-LOOP IS SHORTED

2. M&S ENCLOSURE IS MOUNTED NEAR POST AT LOOP 2 NEGATIVE TERMINAL. MAINTENANCE SWITCH IS MOUNTED ON OUTSIDE OF M&S ENCLOSURE.

3. GROUND M&S ENCLOSURE, MAINTENANCE SWITCH AND VERTICAL POST TO COUNTERPOISE.

4. DC CABLES TO AND FROM ENCLOSURES TO BE DIRECT BURIAL UNDERGROUND SERVICE TYPE. CABLES ABOVE GROUND ARE IN CONDUIT. CONDUIT TERMINATES TWO FEET BELOW GRADE. CABLE RUNS IN THE FIELD AND TO THE ELECTRICAL CONTROL BUILDING ARE TWO FEET BELOW GRADE WITHOUT CONDUIT.

ITEM NO	DESCRIPTION	NO REQ'D	PART NO.
EN-1	NEMA 3R ENCLOSURE (48"H × 36"W × 18"D)	1	
R1-8	RESISTOR, 98 KΩ, 1W, 1%	8	(DALE) WWA-416 OR EQUIV
R9-16	RESISTOR, 2 KΩ, 1W, 1%	8	(DALE) EMF-50-10 OR EQUIV.
R17-20	RESISTOR, 0.1Ω, 100W, 1%	4	(DALE) RH-100 OR EQUIV.
SW1-4	SWITCH, 3 POLE, 600 VDC, 30 A	4	(SQUARE D) HU 361
VR1-8	VARISTOR, 420 V	8	(GE) V320 PA 40 A
D1-8	DIODE, 1200 V, 70 A	8	(IR) IRKE 71-12
SW 5	SWITCH, 2 POLE, 600 VDC, 200 A	1	(SQUARE D) HU 364 RB
BB 1-3	BUSBAR, 200 A, 5 TERMINAL	3	

K. COK

OUTDOOR SUBFIELD MAINTENANCE AND SAFETY ENCLOSURE (1 OF 8) DIKON P.V.T.

52308 F 02 F001831

SCALE NONE

Drawing E-4

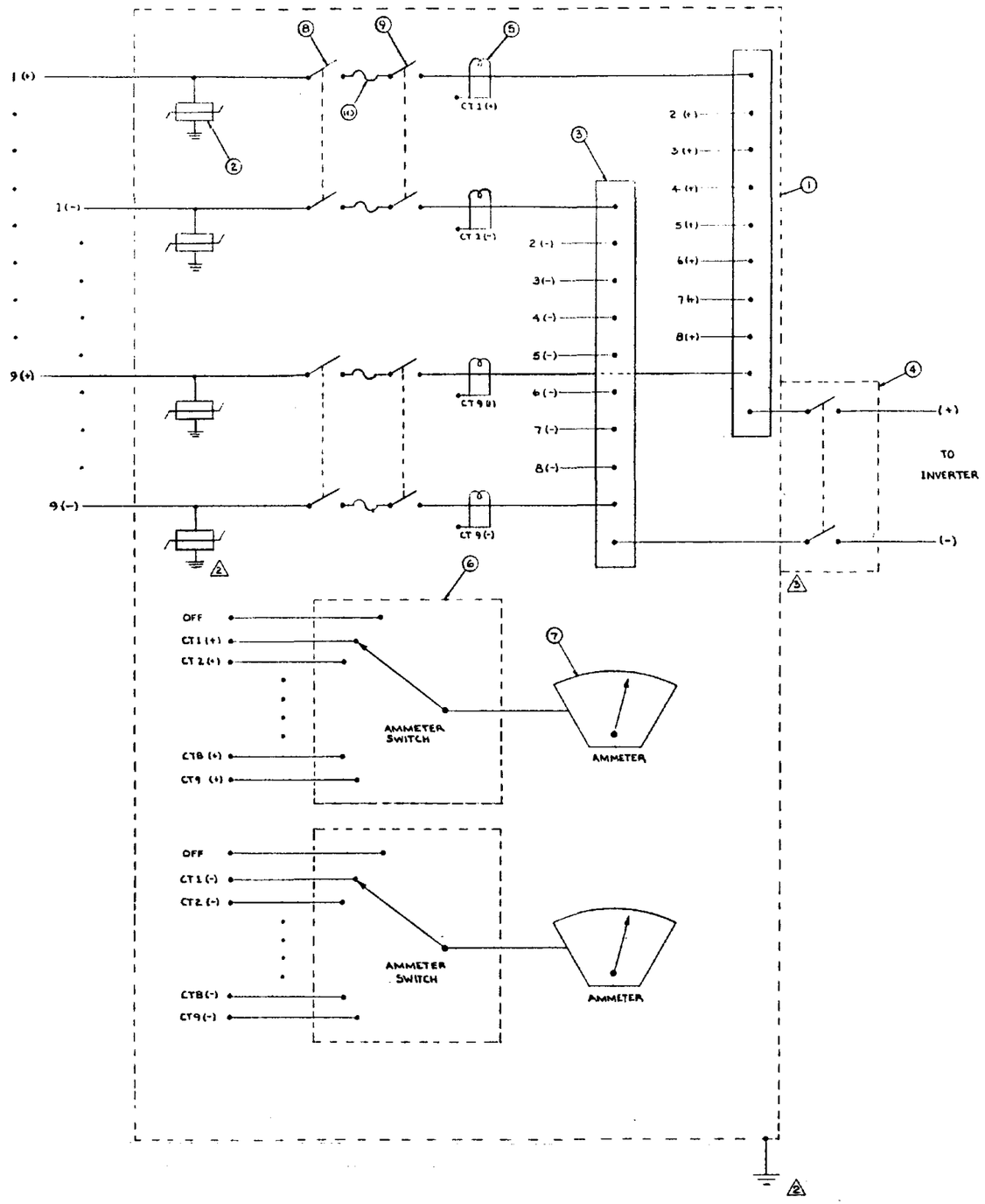

ITEM NO.	DESCRIPTION	QTY	PART NO.
1.	NEMA 1 ENCLOSURE (72" H × 72" W × 24" D)	1	
2.	VARISTOR, 420 V	18	(G.E) V320 PA40A
3	BUSBAR, 800 V, 1200 A. 10 TERMINAL	2	
4	SWITCH, NON-FUSIBLE, 600 VDC, 1200 A	1	(SQUARE D) HU 268
5	DC CURRENT TRANSDUCER	18	(OSI) CT2 00LT
6	AMMETER SWITCH (10 POSITION)	2	
7	AMMETER	2	
8	SWITCH, FUSIBLE, 2 PST, 600 VDC, 200 A	9	(SQUARE D) H264
9	SWITCH, NON-FUSIBLE, 2PST, 600 VDC, 200 A	9	(SQUARE D) HU 264
10	FUSE, 150 A	18	(BUSSMAN) KWS-150

NOTE

1. TWO ENCLOSURES LOCATED IN ELECTRICAL CONTROL BUILDING
2. VARISTORS GROUNDED TO ENCLOSURE CASE. CASE TIED TO GROUND COUNTERPOISE OUTSIDE BUILDING
3. DISCONNECT SWITCH MOUNTED NEXT TO M/S ENCLOSURE.

LIST OF MATERIAL

DRAWN WIJESINA 9-10-82
CHECKED 9-16-82
ENGINEER 9-14-82
PROJ ENGR.
PROGRAM MANAGER 9/14/82

MATERIAL
FINISH
TOLERANCES
UNLESS DIMENSIONS SPECIFIED OTHERWISE, APPLY AS PER MIL CONTRACT OR COST CENTER

TITLE
INDOOR
FIELD MAINTENANCE
AND SAFETY ENCLOSURE
AND SWITCH (1 OF 2) △1
DIXON PVT.

CODE IDENT 52308 SIZE F DWG NO 02 F00 1831 REV

SCALE NONE SHEET 4

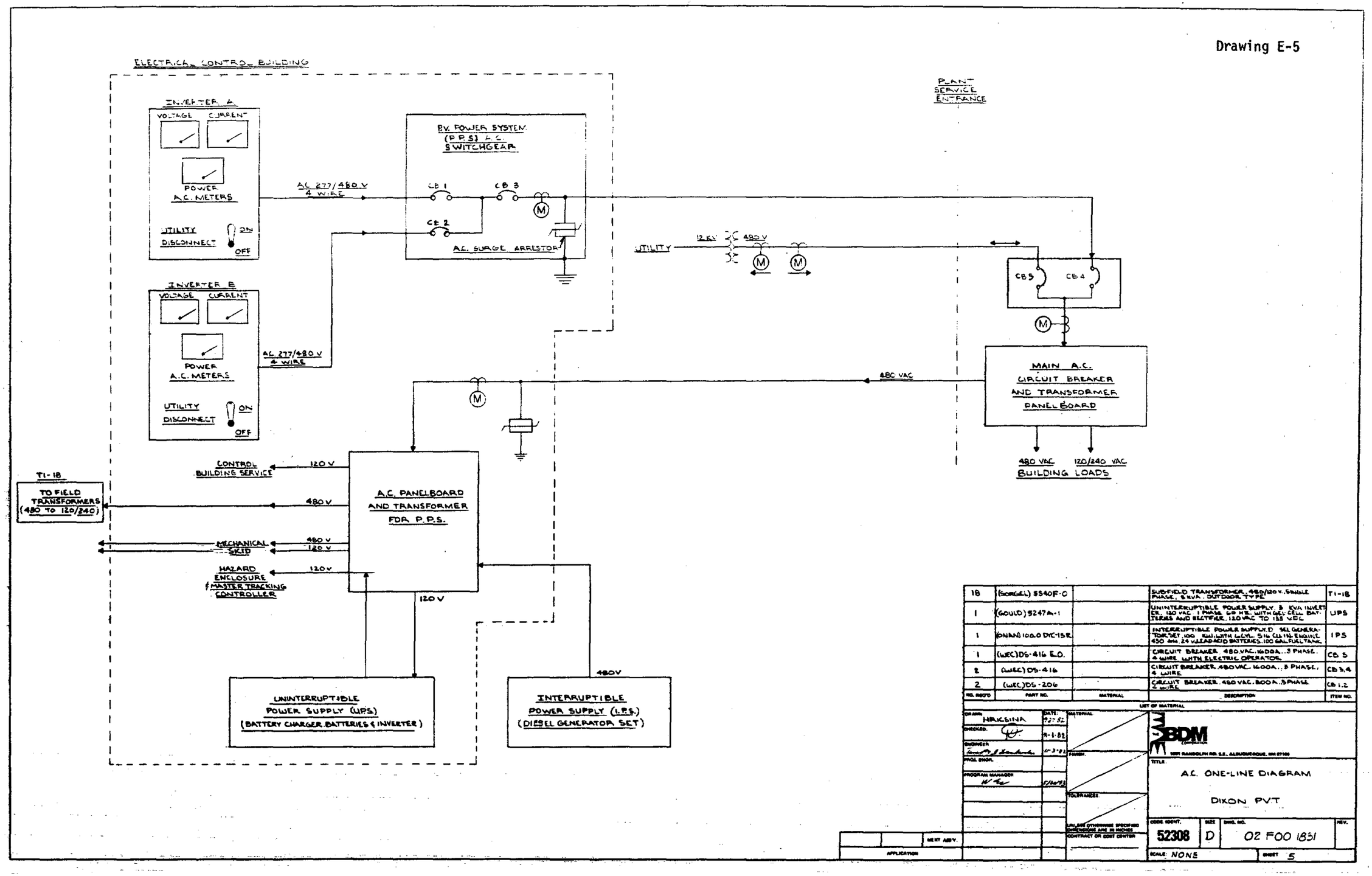

NO. REQ'D	PART NO.	MATERIAL	DESCRIPTION	ITEM NO.
18	(SORGEL) S540F-0		SUB-FIELD TRANSFORMER, 480/120 V., SINGLE PHASE, 5 KVA, OUTDOOR TYPE	T1-1B
1	(GOULD) S247A-1		UNINTERRUPTIBLE POWER SUPPLY, 3 KVA INVERTER, 120 VAC 1 PHASE 60 HZ, WITH GEL CELL BATTERIES AND RECTIFIER, 120 VAC TO 135 VDC	UPS
1	(ONAN) 100.0 DYC-15R		INTERRUPTIBLE POWER SUPPLY, D SEL GENERATOR SET 100 KW WITH 6 CYL. 5 1/2 CU. IN. ENGINE 450 AMP 24 V LEAD ACID BATTERIES, 100 GAL FUEL TANK	IPS
1	(WEC) DS-416 E.O.		CIRCUIT BREAKER 480 VAC, 1600A., 3 PHASE, 4 WIRE, WITH ELECTRIC OPERATOR	CB 5
2	(WEC) DS-416		CIRCUIT BREAKER, 480 VAC, 1600A., 3 PHASE, 4 WIRE	CB 3,4
2	(WEC) DS-206		CIRCUIT BREAKER, 480 VAC, 800A., 3 PHASE, 4 WIRE	CB 1,2

LIST OF MATERIAL

DRAWN	HRICSINA	DATE 7-27-82
CHECKED		8-1-82
ENGINEER		11-3-82
PROJ. ENGR.		
PROGRAM MANAGER		5/26/83
NEXT ASSY.		
APPLICATION		

MATERIAL
FINISH
TOLERANCES
UNLESS OTHERWISE SPECIFIED DIMENSIONS ARE IN INCHES
CONTRACT OR COST CENTER

BDM CORPORATION
1801 RANDOLPH RD. S.E., ALBUQUERQUE, NM 87106

TITLE
A.C. ONE-LINE DIAGRAM
DIXON PVT

CODE IDENT.	SIZE	DWG. NO.	REV.
52308	D	02 F00 1831	

SCALE NONE
SHEET 5

Drawing E-6

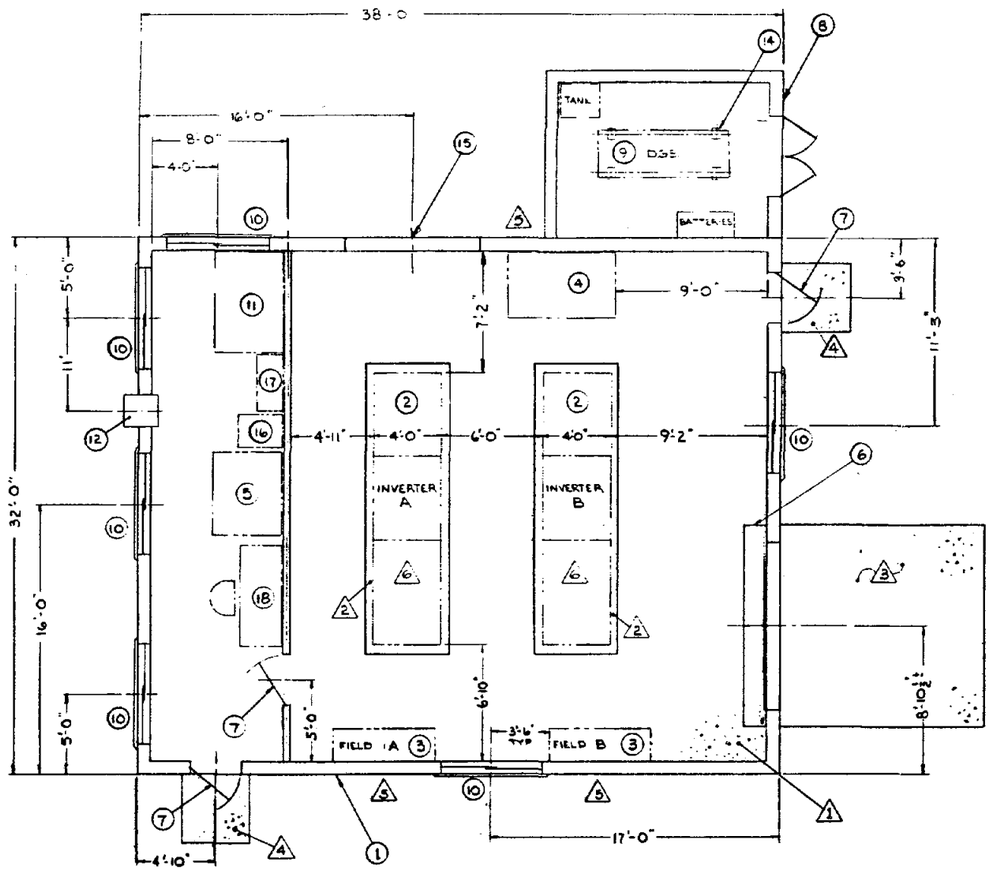

FLOOR PLAN

SCALE: ¼" = 1'-0"

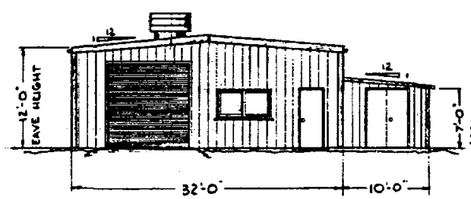

EAST ELEVATION

SCALE: ⅛" = 1'-0"

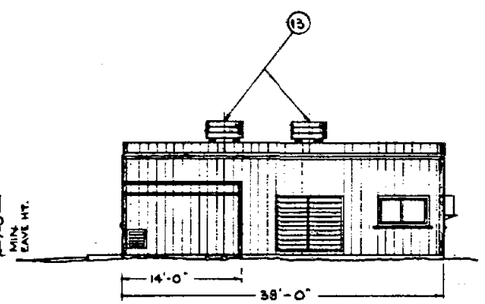

NORTH ELEVATION

SCALE: ⅛" = 1'-0"

ITEM NO.	DESCRIPTION	NO. REQ'D
1	BUILDING, STRAM-STRAMMASTER SERIES, 32' WIDTH, 12' EAVE HEIGHT x 38' LG, 1 ON 12 ROOF SLOPE	1
2	500 KVA INVERTER (5'-0" W x 16'-4" LG x 7'-4" HIGH)	2
3	FIELD DC MAINTENANCE & SAFETY ENCLOSURE (6'W x 6'Wx24"DP)	2
4	P.V. POWER SYSTEM (PPS: A.C. SWITCHGEAR PANEL (1 METER, 2 A.C. C.B. PANELS)	1
5	CONTROL & HAZARD STATION (1 MASTER TRACKING CONTROL, 1 HAZARD ENCLOSURE)	1
6	ROLL-UP SERVICE DOOR, 12'-0" OPENING WIDTH X 10'-1" OPENING HEIGHT	1
7	METAL DOORS, 3' x 7'	3
8	GENERATOR ENCLOSURE (10' W x 14' LG x 7' HIGH)	1
9	DEISEL DRIVEN GENERATOR SET, RADIATOR COOLED, W/100 GAL TANK AND ENGINE START BATTERIES	1
10	HORIZ. SLIDER WINDOW (6' x 3')	6
11	A.C. SERVICE PANEL BOARD, METER AND TRANSFORMER	1
12	ROOM AIR CONDITIONER, HEAT PUMP, 22,500 BTU/HR COOLING CAPACITY, 13,900 BTU/HR HEATING CAPACITY	1
13	EXHAUST FAN, PROPELLER TYPE, UPBLAST, 14,000 CFM, 3 HP MOTOR, 480V, 3-PHASE, 60 HZ	2
14	VIBRATION PADS, (6" x 6" x 1")	4
15	MOTORIZED DAMPER & FILTER BANK (7' H x 8' L)	1
16	UPS SYSTEM (60" H x 24" W x 32" DP)	1
17	BATTERY BANK, CLOSED GELL CELL, (APPROX. 18" DP x 30" H x 40" L)	1
18	DESK & CHAIR (30" W x 72" L)	1

NOTES:

1. CONCRETE SLAB, 12" THICK, W.W. FABRIC REINF. 6x6 - 4GA, #5 REBAR @ 12" O.C. 3" FROM BOTTOM, TOP OF SLAB 6" ABOVE GRADE, STEEL TROWELED FINISH.
2. CONCRETE PADS FOR INVERTERS, 5'W x 17'-4" L x 3'-4" THICK, TOP TO BE 4" ABOVE SLAB, STEEL TROWELED FINISH, WITH 2 CHANNELS IN EACH PAD, C6 x 10.5 x 16'-4" L x 3' APART MOUNTED FLUSH WITH TOP OF PAD.
3. SLOPED CONCRETE APRON, 12' x 12' x 12" THICH, W.W. FABRIC REINF. 6x6 - 4GA, #5 REBAR @ 12" O.C. 3" FROM BOTTOM, SLOPE 6" OVER 12' TO FINISH GRADE, W/BROOM FINISH
4. CONCRETE STOOP, 4' x 4' x 12" THICK, #5 REBAR @ 12" O.C. 3" FROM BOTTOM, 1% SLOPE, W/BROOM FINISH.
5. 5" STEEL CONDUIT THROUGH AND UNDER CONCRETE SLAB TO EXTERIOR FOR DC AND AC CABLE ACCESS TO BUILDING.
6. D.C. & A.C. CONDUITS RUN OVERHEAD TO INVERTER

NO. REQ'D	PART NO.	MATERIAL	DESCRIPTION	ITEM NO.

LIST OF MATERIAL

DRAWN: M PRICSINA — DATE: 9-28-82
CHECKED: — 11-2-82
ENGINEER — 11-5-82
PROJ. ENGR.
PROGRAM MANAGER — 11/4/82
NEXT ASSY.
APPLICATION

MATERIAL
FINISH
TOLERANCES
UNLESS OTHERWISE SPECIFIED DIMENSIONS ARE IN INCHES
CONTRACT OR COST CENTER

BDM CORPORATION
1801 RANDOLPH RD. S.E., ALBUQUERQUE, NM 87106

TITLE
ELECTRICAL CONTROL BLDG.
LAYOUT & ARRANGEMENT
DIXON P.V.T.

CODE IDENT. 52308 | SIZE D | DWG. NO. 02 F00 1831 | REV.

SCALE: AS NOTED | SHEET 6

Drawing E-7

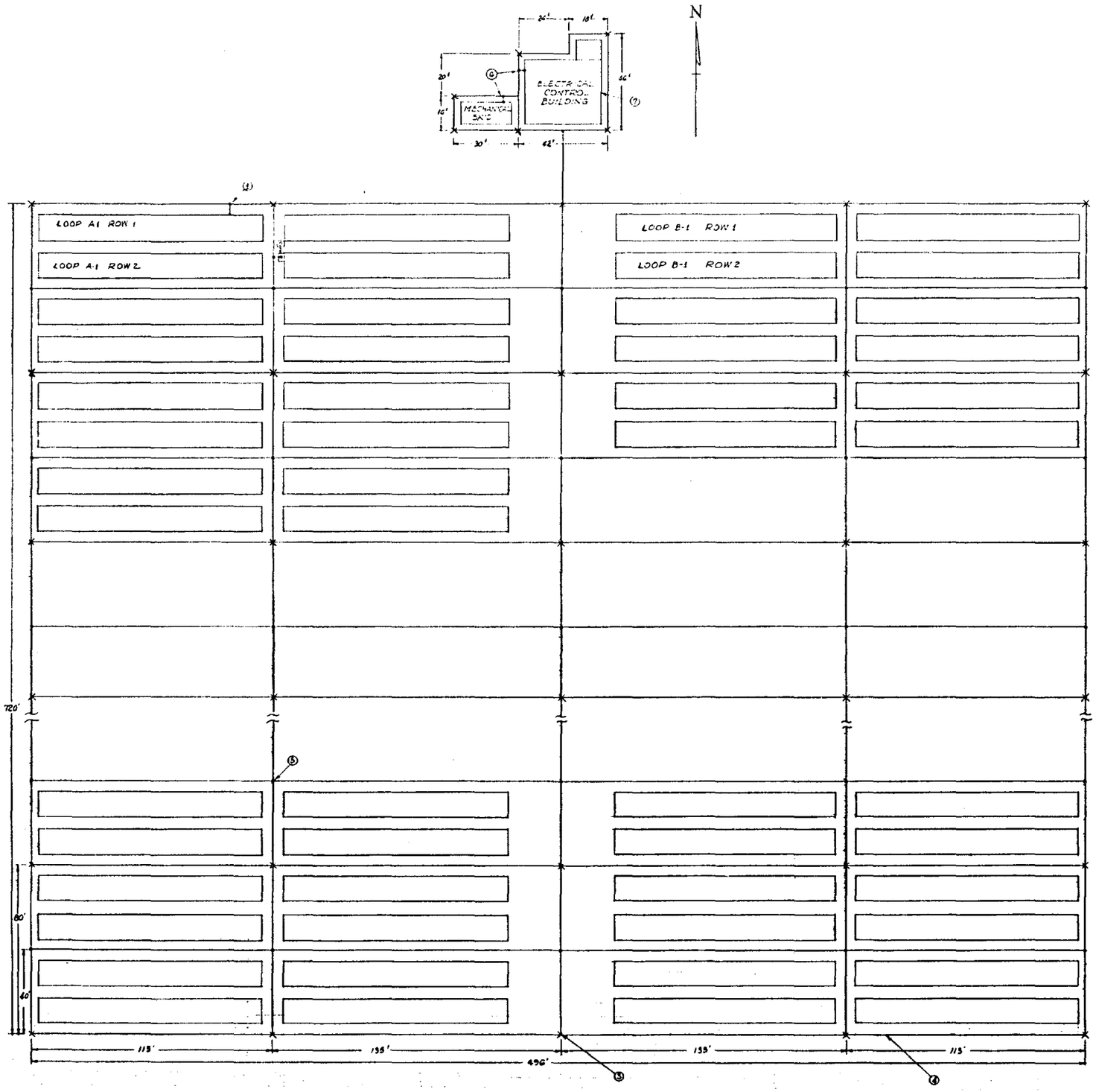

NOTE:

① GROUND ALL VERTICAL POSTS TO COUNTERPOISE.

② GROUND CENTERTAP AND EACH SUBFIELD MAINTENANCE AND SAFETY ENCLOSURE.

③ 10 Ft. GROUND RODS EVERY 80 to 135 ft

④ AWG #4/0 STRANDED BARE COPPER WIRE BURIED 2 ft. DEEP.

⑤ COUNTERPOISE CONNECTED AT ALL INTERSECTIONS (BURNDY OR EQUIV. BOLTED CABLE TO CABLE CONNECTOR)

⑥ GROUND BUILDING AND MECHANICAL SKID ON ALL FOUR SIDES, AND ALL ELECTRICAL EQUIPMENT CASES TO COUNTERPOISE WITH #4/0 STRANDED BARE COPPER WIRE.

⑦ ELECTRICAL BUILDING & MECHANICAL SKID TO BE PROTECTED BY LIGHTNING AIR TERMINALS GROUNDED TO COUNTERPOISE.

NO. REQ'D	PART NO.	MATERIAL	DESCRIPTION	ITEM NO.

LIST OF MATERIAL

DRAWN R. Thomas 5/16/89
CHECKED 5/16/89
ENGINEER
PROJ. ENGR.
PROGRAM MANAGER Dave
MATERIAL
FINISH
TOLERANCES
UNLESS OTHERWISE SPECIFIED DIMENSIONS ARE IN INCHES CONTRACT OR SHOP ORDER
NEXT ASSY
APPLICATION

MESDAR

TITLE FIELD COUNTERPOISE GROUNDING LAYOUT

DIXON PNT.

CODE IDENT 52308 | SIZE F | DWG NO 02 F00 1831 | REV

SCALE NONE | SHEET 7

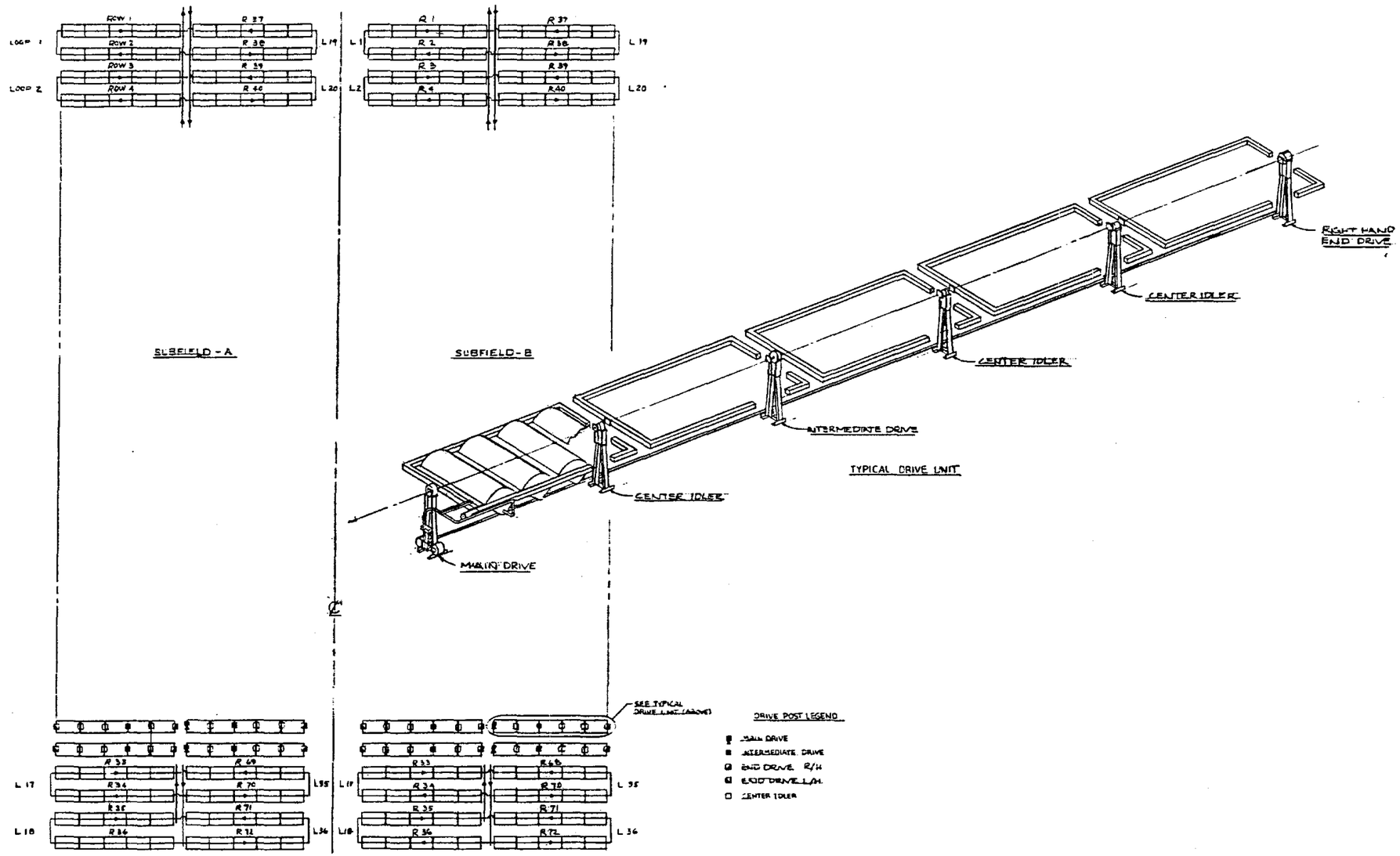

BDM

COLLECTOR ARRAY LAYOUT

DIXON - PVT

52308 F 02 F00 16

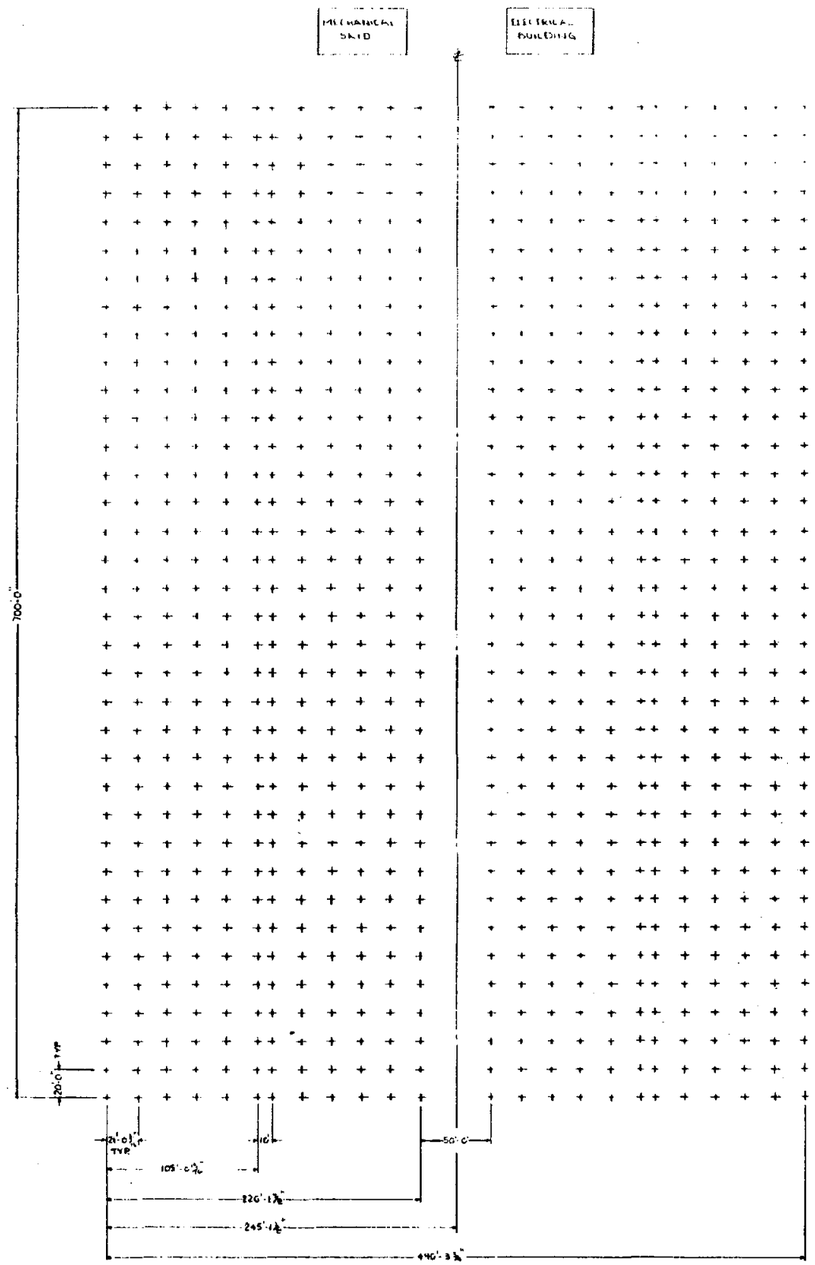

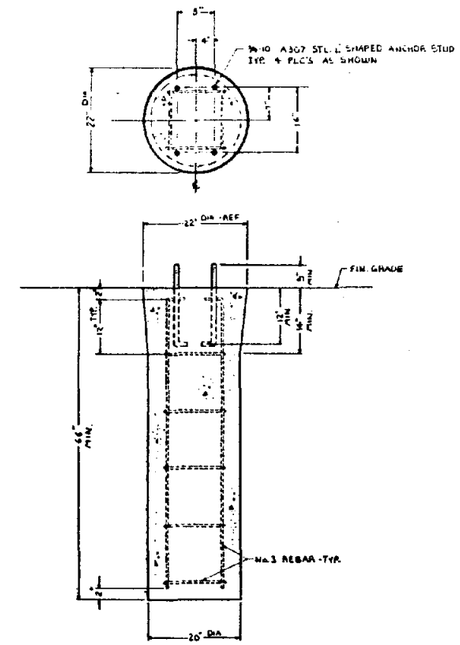

TYPICAL FOUNDATION PIER DETAIL
SCALE 1" = 1'-0"

W. PFEFFERKORN	12-19-82			
CHECKED	12-19-82			
ENGINEER	12/19/82			
PROJ. ENGR.				
PROGRAM MANAGER	12/19/82			

COLLECTOR PIER LAYOUT
DIXON PV.T.

53308 | F | 02-F00 1831
SCALE 1" = 40'-0" | SHEET 12

Drawing M-3

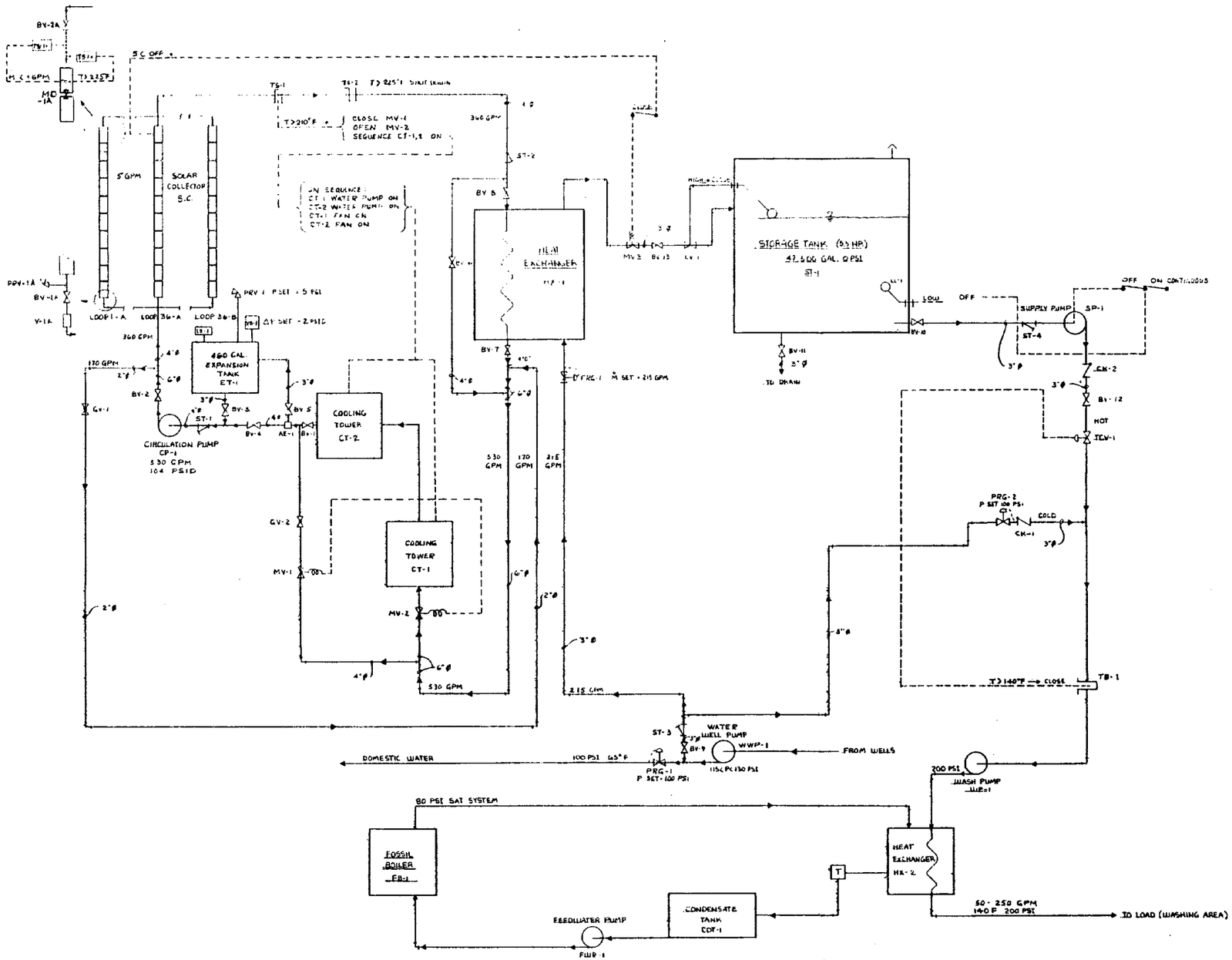

SYMBOL	LEGEND
AE	AIR ELIMINATOR
BV	BALL VALVE
V	VENTURI
CK	CHECK VALVE
FS	FLOW SWITCH
FRG	FLOW REGULATOR
GV	GLOBE VALVE
LV	LEVEL VALVE
MD	MAIN DRIVE
MV	MOTORIZED VALVE
PRG	PRESSURE REGULATOR
PRV	PRESSURE RELIEF VALVE
PS	PRESSURE SWITCH
ST	STRAINER
TCV	TEMPERATURE CONTROL VALVE
TS	TEMPERATURE SWITCH
TB	THERMOSTATIC BULB
VB	VACUUM BREAKER
TG	TEMPERATURE GAUGE

W PFEFFERKORN

PIPING AND INSTRUMENTATION DIAGRAM

DIXON P.V.T.

52300 F 02F001831

SCALE NONE

SHEET 13

V-43/44

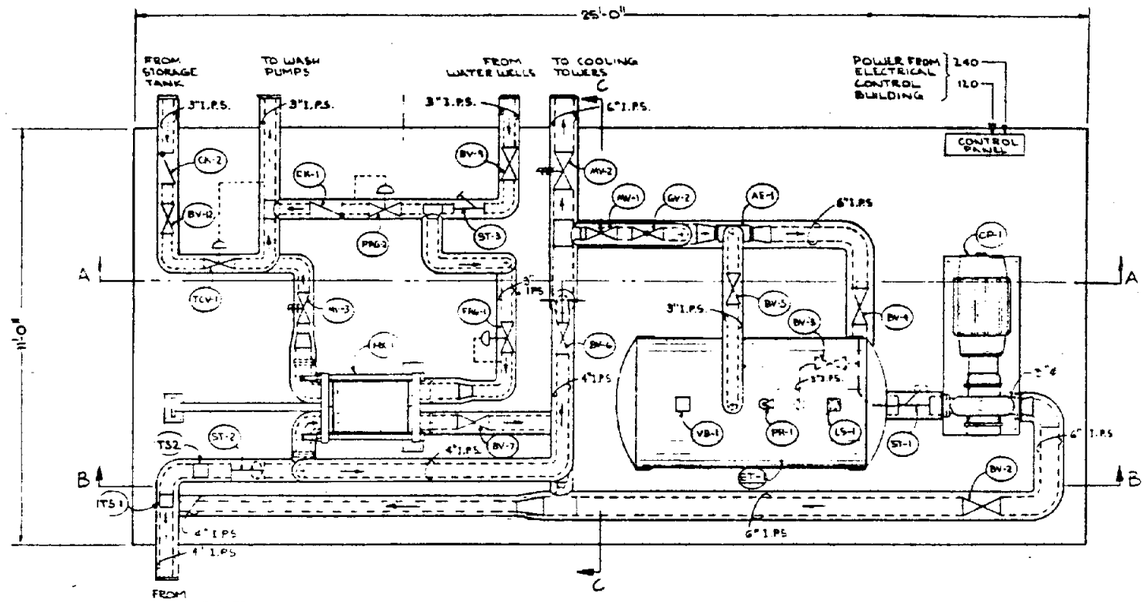

PLAN VIEW - MECHANICAL

SCALE: 1/2" = 1'-0"

NOTES:

1. ALL PIPE TO PIPE FITTINGS TO BE SCHEDULE 40.
2. ALL PIPE TO BE WRAPPED WITH 1 1/2" OF FIBERGLASS INSULATION WITH .016 THICK ALUMINUM JACKETING OVER.
3. INSULATION SHALL BE INSTALLED IN SUCH A MANNER AS TO PROVIDE ACCESS FOR THE OPERATION AND/OR ADJUSTMENT OF VALVES.

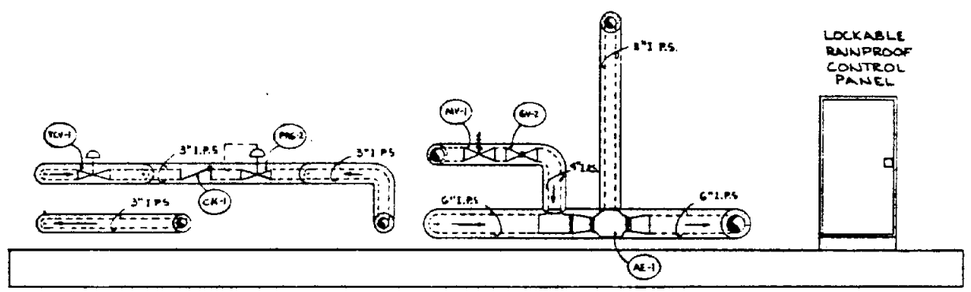

SECTION "A-A"

SCALE: 1/2" = 1'-0"

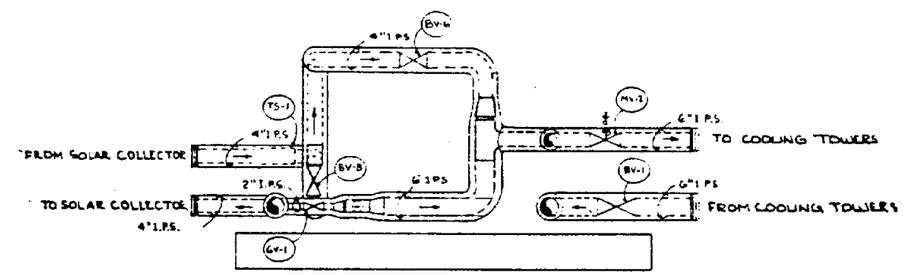

SECTION "C-C"

SCALE: 1/2" = 1'-0"

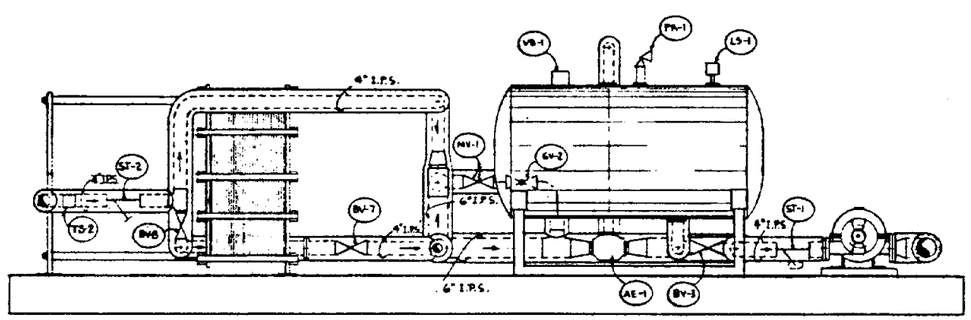

SECTION "B-B"

SCALE: 1/2" = 1'-0"

NO. REQ'D	PART NO.	MATERIAL	DESCRIPTION	ITEM NO.
			LIST OF MATERIAL	

DRAWN BMS + KC 4/2/82
CHECKED 11-1-82
ENGINEER 5/24/82
PROJ. ENGR.
PROGRAM MANAGER 7/14/82
MATERIAL
FINISH
TOLERANCES
UNLESS OTHERWISE SPECIFIED DIMENSIONS ARE IN INCHES CONTRACT OR COST CENTER
NEXT ASS'Y
APPLICATION

TITLE: MECHANICAL SKID

DIXON P.V.T.

CODE IDENT 52308 | SIZE F | DWG. NO. 02F001831 | REV.

SCALE AS NOTED | SHEET 14

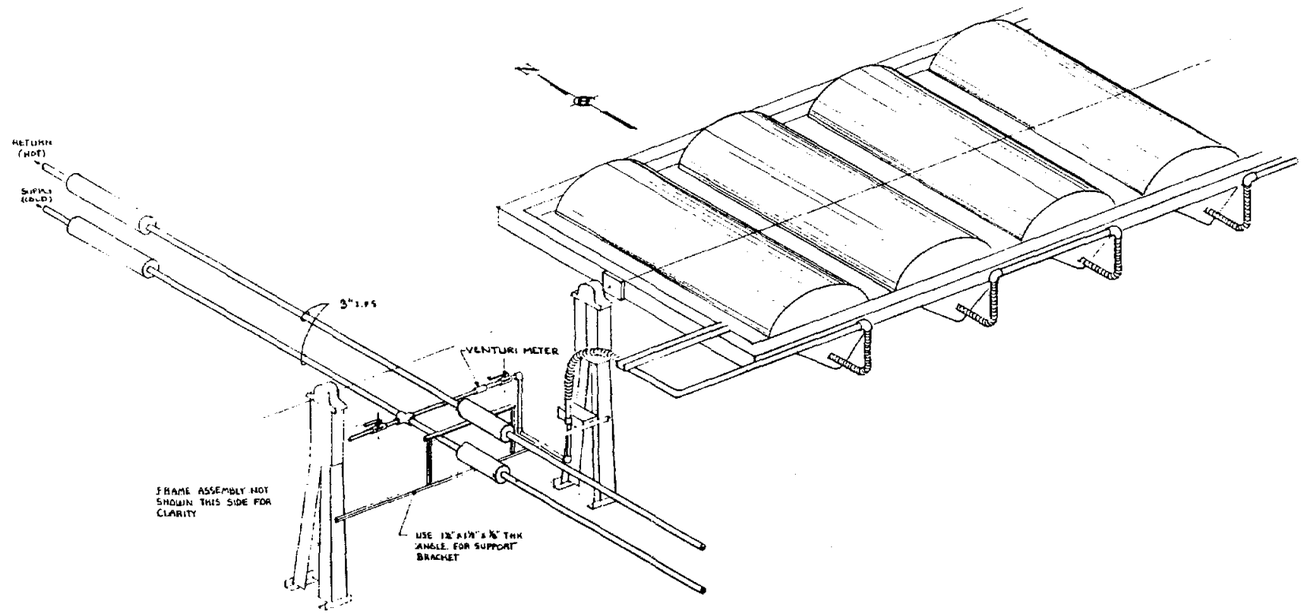

NO. REQ'D	PART NO.	MATERIAL	DESCRIPTION	ITEM NO.
		LIST OF MATERIAL		

DRAWN K. COX 4/9/82
CHECKED 4-6-82
ENGINEER
PROJ. ENGR.
PROGRAM MANAGER
MATERIAL
FINISH
TOLERANCES
UNLESS OTHERWISE SPECIFIED DIMENSIONS ARE IN INCHES CONTRACT OR COST CENTER

TITLE
MANIFOLD DETAILS
DIKON P.V.T.

DRAWING SHEET 52308 SIZE F DWG. NO. 02 F001831 REV.
SCALE NONE SHEET 15

NEXT ASSY
APPLICATION

Drawing M-6

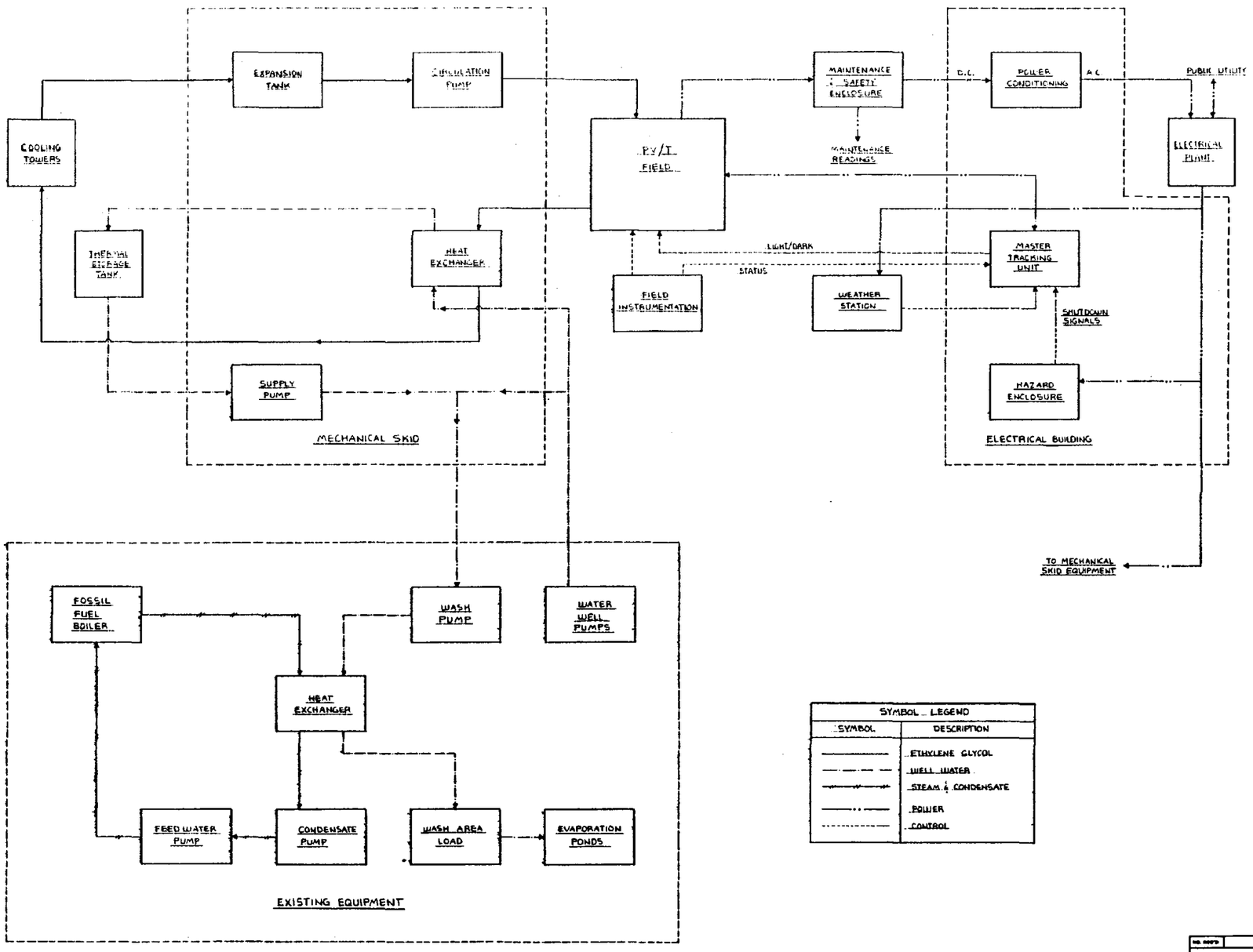

SYMBOL LEGEND	
SYMBOL	DESCRIPTION
———	ETHYLENE GLYCOL
—·—·—	WELL WATER
—w—w—	STEAM & CONDENSATE
——··——	POWER
- - - - - -	CONTROL

BLOCK FLOW DIAGRAM

DIXON PVT.

52308 | F | 02 F001831

SCALE NONE | SHEET 16

Drawing M-7

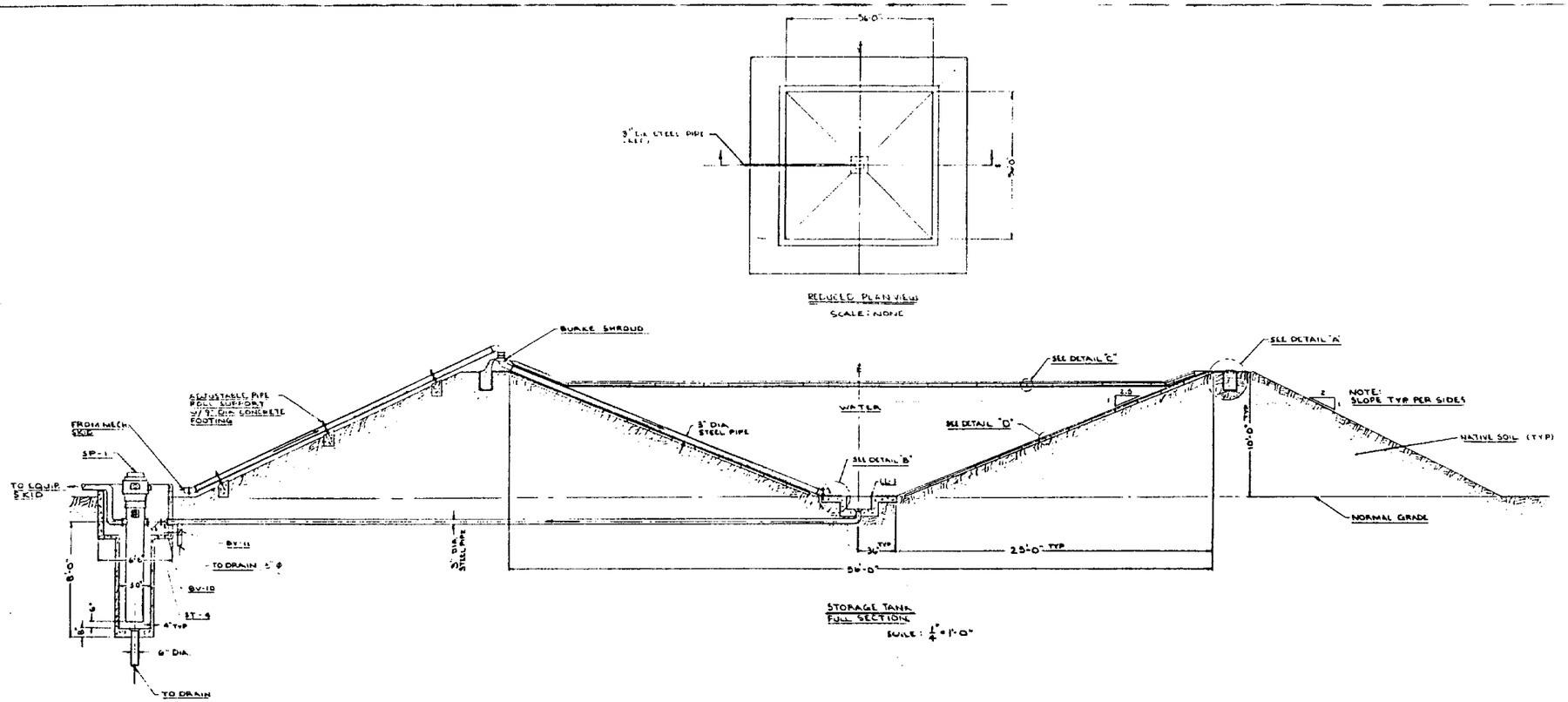

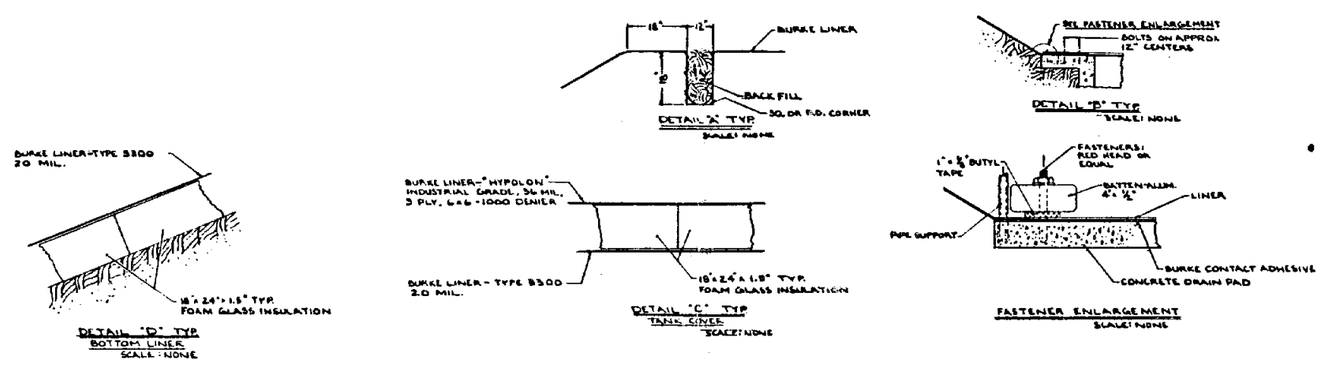

NO. REQ'D	PART NO.	MATERIAL	DESCRIPTION	ITEM NO.
			LIST OF MATERIAL	

DRAWN HRIGSINA 11-6-91
CHECKED 11-6-91
ENGINEER 11/14/91
PROJ. ENGR.
PROGRAM MANAGER 11/14/91

MATERIAL
FINISH
TOLERANCES
UNLESS OTHERWISE SPECIFIED DIMENSIONS ARE IN INCHES. CONTRACT OR DEPT CENTER

BDM

TITLE
STORAGE TANK
DIXON AVT.

CODE IDENT 52308 | SIZE F | DWG NO. 02 F00 1831 | REV

SCALE AS NOTED | SHEET 17

NEXT ASSY
APPLICATION

CHAPTER VI
CONCLUSIONS

A. DESIGN STUDIES

During the development of the designs for the three site application pairs, several aspects of designing a PV/T system were identified which are of importance to design engineers. These observations are summarized in the following paragraphs.

1. Electrical Design

For series connected strings of PV cells which are also in series thermally, the power loss is linear with the temperature difference between the inlet or outlet of the delta-T string. This loss is approximately 10 percent with a delta-T of 50°C. Therefore, long thermal strings are not desirable.

Although a power loss occurs with series connected cells when there is a temperature difference between one end and the other, the power loss is even greater if cells at different temperatures are connected in parallel. Therefore, paralleling of strings of PV cells should be done at the lowest level possible; that is, the temperature differential between paralleled elements should be minimized.

Series strings may be represented by an average temperature to determine the power output, and series strings with the same average temperature may be connected in parallel with no power loss due to paralleling.

If a thermal length, or delta-T string, encompasses more than one collector, these collector strings should be connected in series, if possible.

2. Mechanical Design

In general, thermal storage provides economic benefits by lowering the LCCR. However, applications which have little or no thermal load at night cannot benefit from storage, and the cost of thermal storage cannot be offset.

If the load return temperature is a function of the thermal load, then thermal storage should be installed in parallel with the load. The flow through storage should be equal to the average load flow rate for minimum LCCR. If the load return temperature is constant and independent of the thermal load, then thermal storage should be placed in series with the load. In this case, the flow through the load side of the heat exchanger and into storage should be slightly greater than the average required load flow rate so that storage may be filled during the day.

If space is available, in-ground thermal storage should be seriously considered. It was shown that an in-ground task using foam-glass insulators and impermeable liners was significantly less expensive than a steel tank.

Plate and frame heat exchangers should be used rather than shell-and-tube exchangers. The cost of plate heat exchangers is insignificant compared to total system cost, they provide excellent heat transfer with minimum fouling and minimum maintenance cost, and they allow separation of potable and non-potable streams.

Analyses of the three applications indicate that the flow rate per collector row should be about 5 gpm (3.2×10^{-4} m^3/sec), the row length should be about 10 LFF arrays per row, and the heat exchanger NTU should be high - about 5 or 6.

B. TRADE-OFF-STUDIES

The observation that the array size remains constant for a fixed thermal load, regardless of the electrical load, indicates that the economically optimum field size is driven by the thermal characteristics of the system; that is, the thermal load, the thermal output of the array, and the cost of thermal energy. This is further confirmed by an increase in optimum field size for an increased thermal load and a constant electrical load.

This result confirms the conclusions of Volume I that a PV-T system should not be designed around the electrical requirements of the application. Increasing the size of the array in order to displace a larger electrical load will not improve the economics of the system since the additional cost cannot be recovered unless a larger thermal load is available to be displaced.

If the electrical load is increased, the LCCR increases. This is because more backup electricity is required to meet the electrical load for the same size array. If the field size were increased without increasing the thermal load, excess thermal energy would be produced which would involve a larger cooling tower and higher parasitics. Another consideration is that, although the value of displaced electrical energy is about 3.5 times the value of displaced thermal energy (i.e., natural gas), the thermal efficiency of LFF collectors is about 3.5 times the maximum electrical efficiency at NOCT. That is, the thermal efficiency is almost constant at between 50 percent to 52 percent, regardless of weather conditions, whereas electrical efficiency decreases from a maximum of 15 to 16 percent to a minimum of 10 to 11 percent as the fluid temperature increases from $0^{o}C$ to $100^{o}C$. Thus, the array provides greater economical benefits as a thermal collector than as an electrical generator.

As the electrical load decreases, more of the electrical load is displaced for a fixed array size and thermal load so that less backup electrical power is required. Therefore, the LCCR decreases with decreasing electrical load and any excess electricity can be sold back to the utility.

The conclusion to be drawn from this analysis is that the major economic benefits occur from displacing thermal energy with the PV/T system. It appears that once the major capital cost has been expended for a system whose size is defined by the thermal load, the additional cost of the PV portion of the array may be offset by displacing a portion of the electrical load or selling back electrical power to the utility. However, whether a PV/T system or a thermal-only system provides the

largest return on investment, or the lowest LCCR, must be determined on a case-by-case basis.

In addition to the above observations, the following conclusions may be drawn from the trade-off study:

(1) The major factors affecting economic feasibility are collector costs and site characteristics, including insolation and cost of energy.

(2) Minor factors affecting feasibility and array size include the phasing of the load with daylight hours, cell efficiency, sellback ratio, and heat exchanger size. It appears from these analyses that efforts to decrease module costs, while maintaining module efficiencies at about 15 percent, will have a greater payoff than trying to increase efficiencies.

(3) Increasing the sellback ratio had no effect on the LCCR for the Fresno hospital application because the thermal load, and therefore, the field size, is small. Little or no excess electrical power is available for sellback -- it is all used by the load. On the other hand, although the school PV/T system is also small, it does not have a summer load, so that a significant amount of electrical power may be sold back annually.

DISTRIBUTION LIST:

Acurex Corporation (1)
Attn: George Sutton
Bob Spencer
Dariush Rafinejad
485 Clyde Avenue
Mountain View, CA 94042

Arco Solar, Inc. (1)
Attn: Ray Kosanke
Library
P. O. Box 4400
Woodland Hills, CA 91365

Arizona State University
Attn: Charles Backus
College of Engineering
Tempe, AZ 85281

Battelle
Attn: Don Carmichael
505 King Avenue
Columbus, OH 43201

The BDM Corporation (3)
Attn: Bill Schwinkendorf
1801 Randolph Road SE
Albuquerque, NM 87111

Black & Veatch
Attn: Sheldon L. Levy
P. O. Box 8405
Kansas City, MO 64114

U. S. Dept. of Energy
Div. of PV Energy Technologies
Attn: R. Annan
A. Krantz
M. Prince
L. Herwig
A. Scolaro
1000 Independence Ave. SW
Washington, DC 20585

EPRI (2)
Attn: Roger Taylor
Ed DeMeo
P. O. Box 10412
Palo Alto, CA 94303

ENTECH, Inc.
Attn: Mark O'Neill
A. J. McDanal
P. O. Box 612246
DFW Airport, TX 75261

Intersol Power Corporation
Attn: John Sanders
Sid Broadbent
11901 West Cedar
Lakewood, CO 80228

Jacobs Engineering
Attn: Bob Martin
251 South Lake Ave.
Pasadena, CA 91101

Jet Propulsion Lab (3)
Attn: K. Shimada
R. Ferber
Solar Data Center
MS 502/414
4800 Oak Grove Drive
Pasadena, CA 91109

Martin Marietta
Attn: R. Hein
P. O. Box 179
Denver, CO 80201

Oak Ridge National Lab
Attn: Steve Kaplan
P. O. Box X
Oak Ridge, TN 37830

SERI, Library (2)
1536 Cole Blvd., Bldg. #4
Golden, CO 80401

SOLAVOLT
Attn: Ray Kendall
P. O. Box 2934
Phoenix, AZ 85062

Southern Cal Edison
Attn: Spencer Carlisle
2244 Walnut Grove Ave.
Rosemead, CA 91770

Spectrolab
Attn: Steve Olah
12500 Gladstone Avenue
Sylmar, CA 91342

United Energy Technologies
Attn: John Mackay
420 Lincoln Center Dr.
Foster City, CA 94404

Varian & Associates (1)
Attn: N. Kaminar
611 Hansen Way K-219
Palo Alto, CA 94303

6223 G. Jones
6223 M. Thomas
6224 D. Arvizu (10)
3141 C. M. Ostrander (5)
3151 W. L. Garner (3)
3154-3 C. H. Dalin (25)
For DOE/TIC
(Unlimited Release)
8424 M. A. Pound