CONTRACTOR REPORT

SAND82-7154
Unlimited Release
UC-63e

500 Watt Commercialized Concentrator System

Kenneth Ronney, Ernest Aerni
Spectrolab, Inc.
Sylmar, CA 91342

Prepared by Sandia National Laboratories Albuquerque, New Mexico 87185 and Livermore, California 94550 for the United States Department of Energy under Contract DE-AC04-76DP00789

Printed February 1983

When printing a copy of any digitized SAND Report, you are required to update the markings to current standards.

Issued by Sandia National Laboratories, operated for the United States Department of Energy by Sandia Corporation.
NOTICE: This report was prepared as an account of work sponsored by an agency of the United States Government. Neither the United States Government nor any agency thereof, nor any of their employees, nor any of their contractors, subcontractors, or their employees, makes any warranty, express or implied, or assumes any legal liability or responsibility for the accuracy, completeness, or usefulness of any information, apparatus, product, or process disclosed, or represents that its use would not infringe privately owned rights. Reference herein to any specific commercial product, process, or service by trade name, trademark, manufacturer, or otherwise, does not necessarily constitute or imply its endorsement, recommendation, or favoring by the United States Government, any agency thereof or any of their contractors or subcontractors. The views and opinions expressed herein do not necessarily state or reflect those of the United States Government, any agency thereof or any of their contractors or subcontractors.

Printed in the United States of America
Available from
National Technical Information Service
U.S. Department of Commerce
5285 Port Royal Road
Springfield, VA 22161

NTIS price codes
Printed copy: A04
Microfiche copy: A01

SAND82-7154
Unlimited Release
Printed February 1983

Distribution
Category UC-63e

500 Watt Commercialized Concentrator System

Kenneth Ronney
Ernest Aerni
Spectrolab, Inc.
12500 Gladstone Avenue
Sylmar, CA 91342

Under Sandia Laboratories Contract No. 07-7168

Abstract

A passively cooled, single axis tracking, polar axis mounted photovoltaic concentrator system has been designed, fabricated, installed, and tested. This report details system description, design considerations, system performance and a production cost estimate.

TABLE OF CONTENTS

Section	Title	Page
1.0	INTRODUCTION	1-1
2.0	SYSTEM DESCRIPTION	2-1
2.1	OVERALL CONFIGURATION	2-1
2.2	STRUCTURE, DRIVE, TRACKER AND FOUNDATION	2-2
	2.2.1 Structure	2-2
	2.2.2 Drive	2-5
	2.2.3 Tracker	2-9
	2.2.4 Foundation	2-9
2.3	OPTICAL DESIGN	2-10
2.4	CELL CONFIGURATION, CELL COOLING SUBSTRATE, AND LAYDOWN TECHNIQUES	2-12
	2.4.1 Cell Configuration	2-12
	2.4.2 Cooling System Configuration	2-12
	2.4.3 Cell Interconnection, Laydown and Encapsulation	2-12
2.5	ELECTRICAL CONFIGURATION AND LOAD	2-14
	2.5.1 Electrical Configuration	2-14
	2.5.2 Load	2-17
3.0	DESIGN CONSIDERATIONS	3-1
3.1	LOCATION OF CELL STRINGS	3-1
3.2	OPTICS/CELL STRING LENGTH	3-3
3.3	SELECTABLE SYSTEM VOLTAGE	3-3
3.4	TRACKER DRIVE SIZING AND SELECTION	3-3
3.5	CELL SUBSTRATE COOLING	3-5
4.0	SYSTEM PERFORMANCE	4-1
4.1	ORIGINAL PERFORMANCE GOALS	4-1
4.2	PULSE SIMULATOR TESTS	4-1

Table of Contents
(continued)

Section	Title	Page
4.3	OUTDOOR TEST RESULTS	4-16
	4.3.1 Electrical Performance	4-16
	4.3.2 Tracker/Optical Performance	4-23
	4.3.3 Thermal Effects of Different Absorber Finishes	4-23
5.0	CONCLUSIONS	5-1
6.0	PRODUCTION COST ESTIMATE	6-1
6.1	INTRODUCTION	6-1
6.2	SYSTEMS COST SUMMARY	6-1
6.3	DETAILED COST BREAKDOWN FOR EACH SYSTEM COMPONENT	6-3
	6.3.1 Secondary Absorber Module	6-3
	6.3.2 Primary Mirror Assembly	6-7
	6.3.3 Tracking Structure, Electronics and System Installation	6-7

LIST OF FIGURES

Figure	Title	Page
2-1	System Photo	2-3
2-2	System Configuration	2-4
2-3	Aluminum Support Weldment	2-6
2-4	South A Frame	2-7
2-5	North A Frame	2-8
2-6	System Optical Diagram	2-11
2-7	Heat Sink/Secondary Optics	2-13
2-8	Cell Laydown Configuration	2-15
2-9	Secondary Assembly End View	2-16
2-10	Electrical Schematic	2-18
3-1	Original Design	3-2
4-1 through		4-2 through
4-12	Pulse I-V Curves	4-13
4-13	Module and String Efficiencies	4-15
4-14 through		4-17 through
4-17	Outdoor System Test I-V Curves	4-20
4-18	Relative Power Versus Parallel Wiring	4-22
4-19	Effects of Tracking Steps	4-23
4-20	Effects of Tracking Steps	4-25
6-1	Manufacturing Process Sequence	6-5

LIST OF TABLES

Table	Title	Page
3-1	System Voltage Choices	3-4
4-1	Pulse Simulator Test Results	4-14
4-2	Summary of Outdoor Tests	4-21
4-3	Open Circuit Voltage Tests	4-26
6-1	Production Cost Summary	6-2
6-2	Required Production Capital	6-7
6-3	Detailed Production Cost Estimate	6-9 and 6-10

1.0 INTRODUCTION

This report is divided into five major sections. This section, the Introduction, serves as a guide to the reader for the rest of the report.

Section 2, System Description, describes the final system design, as installed at Sandia Laboratories' Outdoor Photovoltaic Test Facility.

Section 3, Design Considerations, explains the major design choices made during the course of this program, and details the analysis in selected areas.

Section 4, System Performance, shows the progression of performance evaluation from design goals through final outdoor testing.

Section 5, Conclusions, summarizes major strengths and weaknesses in the areas of configuration, optics, electrical design, and thermal control.

Section 6, Production Cost Estimates, gives estimated system costs for a production rate of for 1 to 10 megawatts (i.e., 2,000 to 20,000 systems) per year, based on 1980 costs.

2.0 SYSTEM DESCRIPTION

2.1 OVERALL CONFIGURATION

The Commercialized Concentrator System, as originally planned, was a 500 watt (peak) system. Due to manufacturing constraints for a single unit prototype, the primary mirror length had to be reduced by 30%. Therefore, the number of solar cells also had to be reduced, giving a system peak power of approximately 350 watts. In all other respects, the design remained unchanged.

The system is a single axis tracking, polar axis oriented photovoltaic system with aluminum honeycomb parabolic trough mirrors concentrating sunlight onto two parallel strings of solar cells. Each of the two primary parabolic mirrors is 120" long with a projected clear aperture (i.e., optical width) of 51.26". Geometric concentration ratio at the cells is 22.6:1. Cooling is strictly passive. The system structure is an "A-frame" type, with a central torque tube to which the optics and cell strings are attached. The torque tube is driven by a direct drive 30,000:1 gearmotor which in turn is controlled by active, sun-seeking electronics.

The solar cells are N/P single crystal silicon devices fabricated by Spectrolab specifically to be used at the levels of optical concentration experienced in this system. The cells are installed in two parallel strings, each with 54 cells divided into three electrically isolated series strings of 18 cells each.

The six 18-cell series strings are connected to a multi-pole, multi-position switch which allows user selection of any one of four parallel, series-parallel, or series connections. Thus, the system can operate at a nominal 6, 12, 18, or 36

volt level. These nominal voltage levels are designed for charging lead-acid batteries. The 18-cell strings have a peak power voltage of 7.85V, which gives 2.62 volts per cell to the batteries, a level high enough to charge them rapidly when needed.

Figure 2-1 is a photograph of the system, installed on temporary pads, and operating at Spectrolab's Sylmar, California facility. Final installation is mounted flush to the ground.

2.2 STRUCTURE, DRIVE, TRACKER AND FOUNDATION

2.2.1 Structure

The system structure is fabricated from welded and bolted steel and aluminum structural shapes and plates. All parts are stock sizes and shapes with nothing being supplied as custom material.

Figure 2-2 shows the overall system configuration. There is a large bolted steel A-frame support at the north and a welded steel A-frame at the south. These support the torque tube, a steel tube to which the optics and cell substrates are attached. All steel components are finished with a primer and two topcoats of weather resistant paint.

Although primary mirrors of the original planned length of 150" could not be obtained, the overall system structural size was left as originally designed. Rather than make a separate, second scaled-down design, we felt we would gain more experience completing the full size structure. Thus, the support structure is actually larger than required for the mirrors which were used, creating a system with excessive size for the power produced.

A large fabricated aluminum weldment is attached to the torque tube. This weldment locates and supports the primary mirrors and the cell substrate/secondary optics assemblies. This

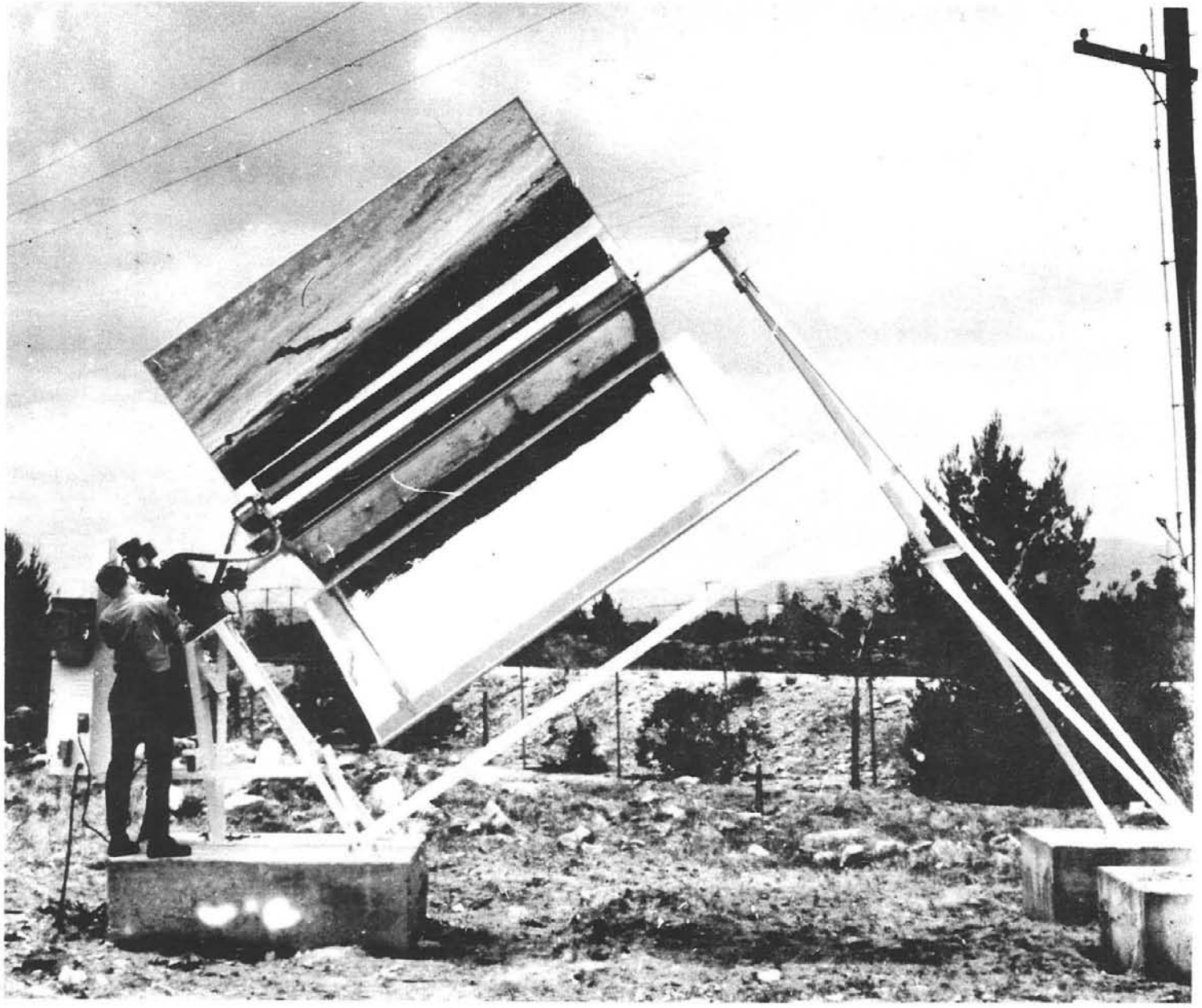

Figure 2-1. Photo of Commercialized Concentrator System, Installed and Operating at Spectrolab's Sylmar, CA Facility

THE INFORMATION CONTAINED IN THIS DOCUMENT IS PROPRIETARY AND THE SOLE PROPERTY OF SPECTROLAB. ANY USE OR DISCLOSURE OF THIS INFORMATION IS EXPRESSLY PROHIBITED WITHOUT THE WRITTEN CONSENT OF SPECTROLAB.

REVISIONS

SYM	ZONE	DESCRIPTION	BY	DATE	APPROVED

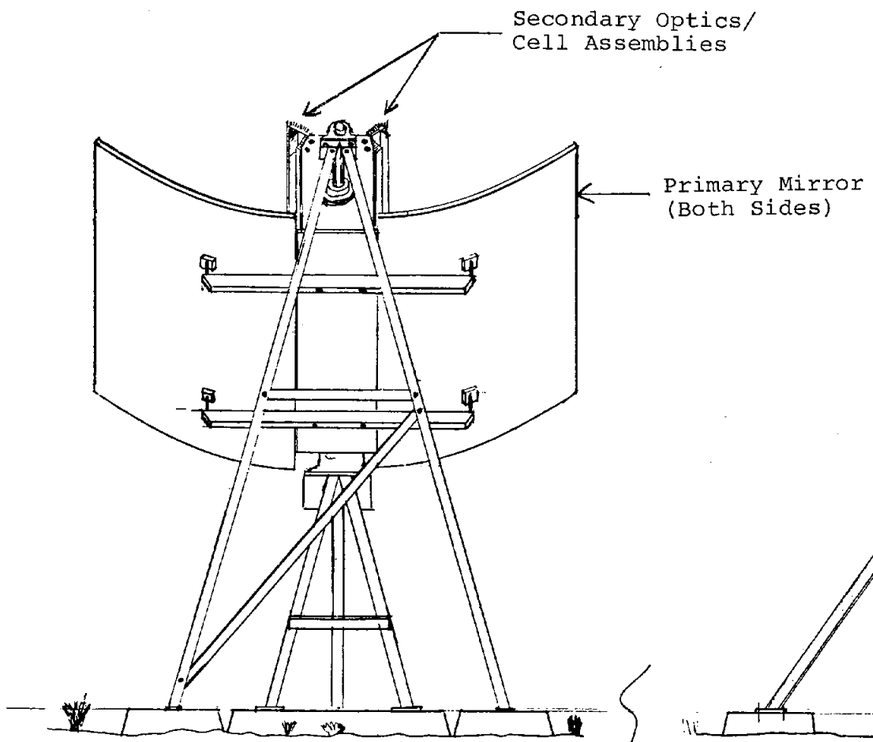

View Looking South

Following items deleted in this view:

1. Struts between N & S A-frame
2. Instrumentation Box

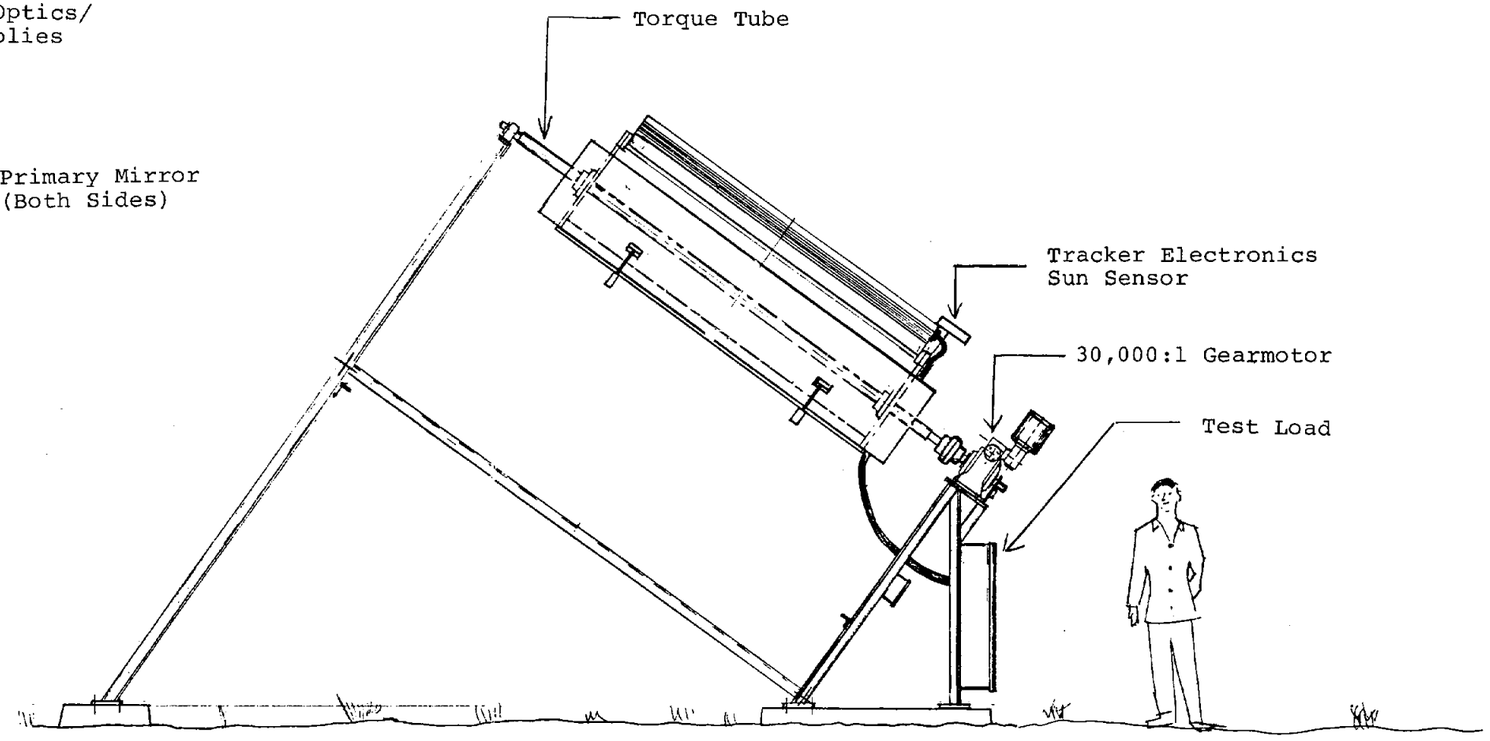

View Looking East

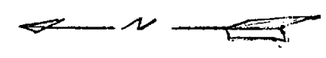

Figure 2-2

System Configuration,
Commercialized Concentrator

NOTE: UNLESS OTHERWISE SPECIFIED.

QTY REQD	IDENTIFYING NO.	DESCRIPTION	MATERIAL	MAT'L SPEC	ITEM NO.

LIST OF MATERIALS

UNLESS OTHERWISE SPECIFIED
DIMENSIONS ARE IN (INCHES)
BREAK ALL SHARP EDGES .010 .030
REMOVE ALL BURRS
DIMENSIONS PER ANSI Y 14.5 1973
WELD SYMBOLS PER AWS A2.0 68
SURFACE FINISH PER ASA B46.1 1962

TOLERANCES

	ENGLISH	METRIC
X	±	±
XX	±	±
XXX	±	±
FRACT 1/X	±	CONVERT FACTOR .254
ANGLES	±	±

FINISH:

DO NOT SCALE PRINT

NEXT ASSY	USED ON
APPLICATION	

DRAFTSMAN: L.D. STANTON DATE 1-16-80
CHECKER DATE
DESIGNER: L.D. STANTON DATE 1-16-80
ENGINEER DATE
DATE
APPROVED DATE
APPROVED DATE

SPECTROLAB
a subsidiary of Hughes Aircraft Co.
12500 Gladstone Avenue Sylmar, California

SYSTEM ILLUSTRATION.
35° LATTITUDE
COMMERCIALIZED CONCENTRATOR

CODE IDENT NO. 15901 SIZE D REV LTR
SCALE 1/4 WEIGHT 270 lb SHEET OF

2-5,6

weldment support assembly was fabricated from aluminum due to its proximity to the mirror surfaces. Specifically, the inherent corrosion resistance of aluminum eliminated the need for a highly stable surface coating. Due to the location of the mirrors, if any rust (for instance) were to form on the weldment, it would drip and run onto the mirrors, severely reducing their reflectivity. Thus, aluminum served as a highly suitable material. Details of this weldment are shown in Figure 2-3.

The South A-frame, to which the gearmotor is bolted, was welded together to simplify installation in the field. It is a relatively compact unit, and can be transported in an assembled state. Figure 2-4 shows this unit in detail.

The North A-frame is, except for its mounting feet, a bolted together assembly of steel angles. It is readily site-assembled and easy to transport when disassembled. The North A-frame is shown in Figure 2-5.

2.2.2 Drive

The tracker drive is a 30,000:1 gearmotor unit with a totally enclosed fan cooled 1/4 horsepower 115 VAC reversible motor. It is coupled directly to the torque tube with a rigid shaft coupling.

The 30,000:1 reduction, a stock triple worm reduction, was chosen for its minimal maintenance requirements, outdoor weatherability, and overall ruggedness. The ratio was selected to allow a one to two second period of operation during tracking, which would give, with its 1725 rpm motor, a tracking motion of 1/3 degree per second of operation. Since the system optics has a field of view of 3° in the rotation axis, full utilization of available sunlight would be made.

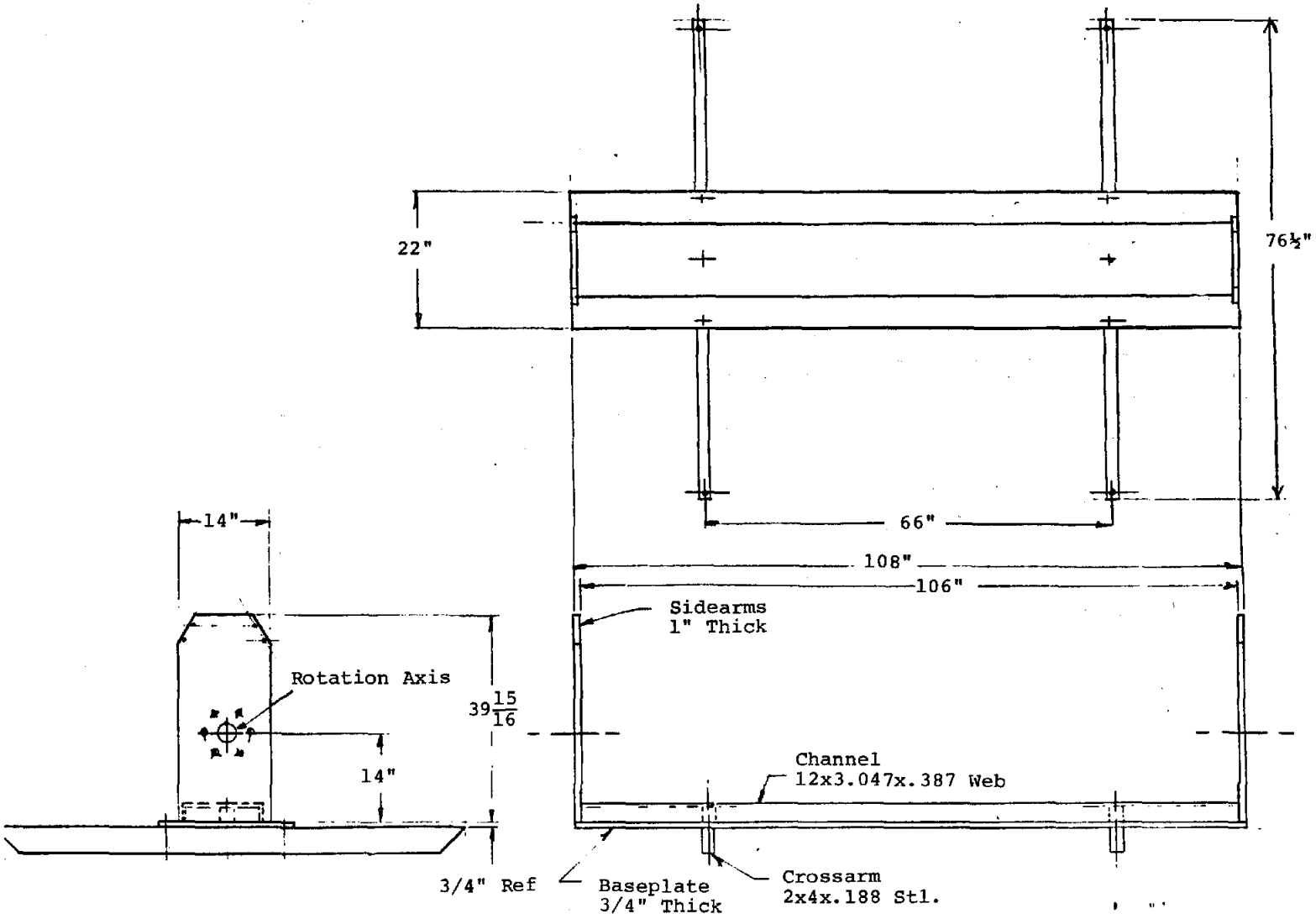

Figure 2-3

Aluminum Support Weldment, with steel crossarms shown. Torque tube goes through rotation axis. Primary mirrors are bolted to baseplate and crossarms. Cell assemblies are located between tops of sidearms.

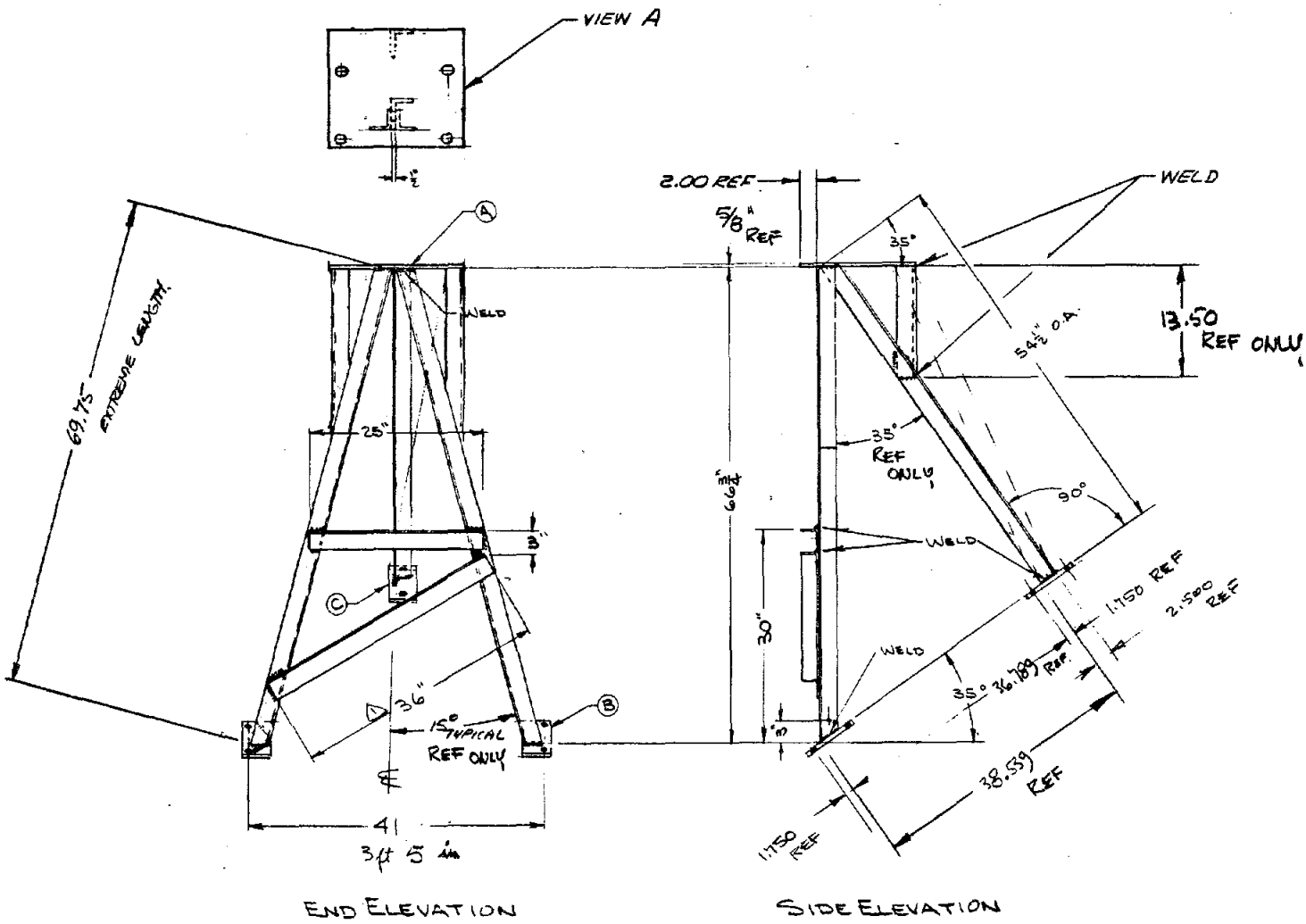

Figure 2-4

South "A"-Frame Assembly, for 35° Latitude installation. Gear drive is bolted to the top plate. Entire assembly is of welded construction.

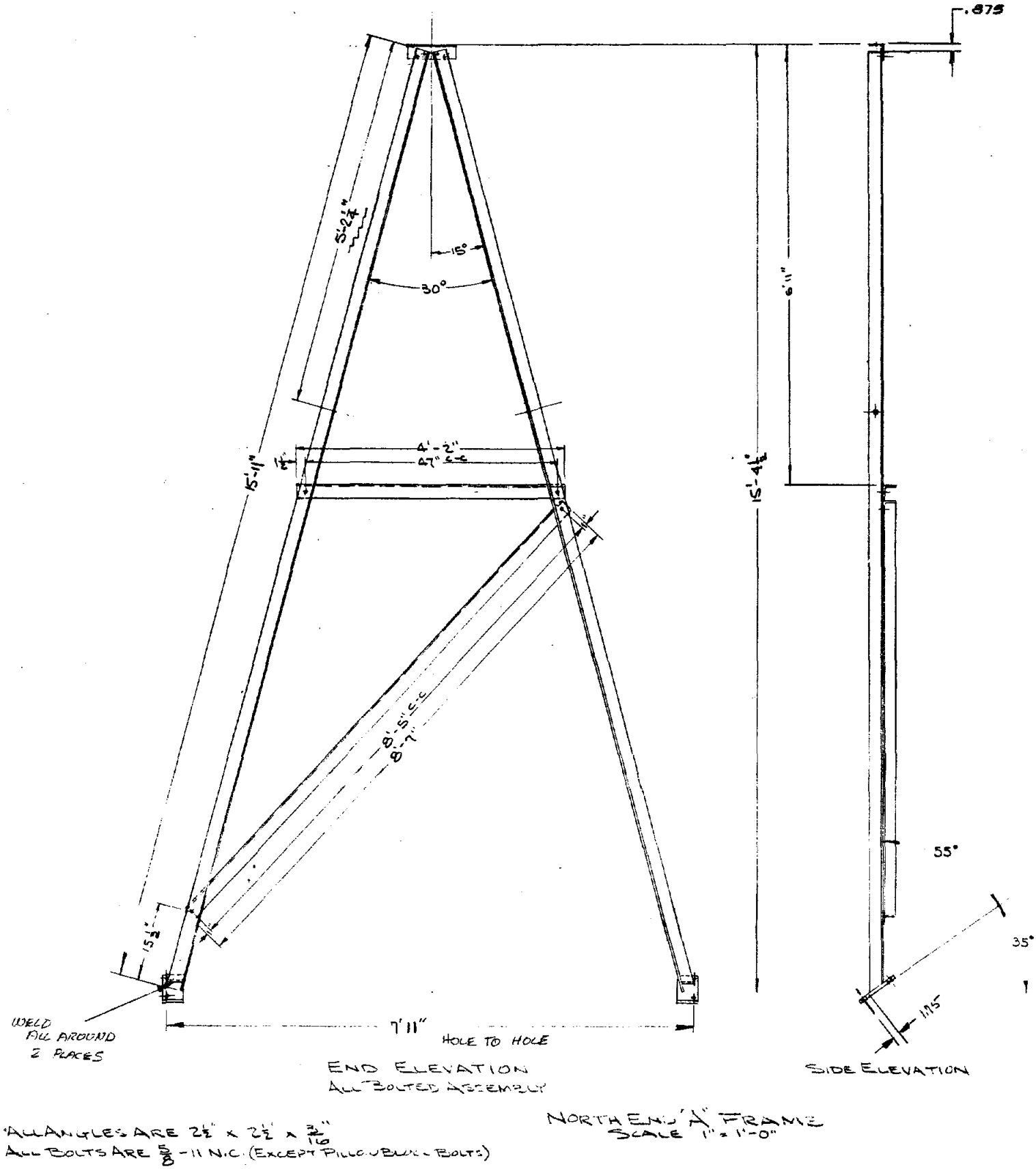

Figure 2-5

North "A"-Frame. All parts except mounting feet are bolted together. Pillow block support of torque tube is at top.

The gearmotor drive was sized to operate under worst case wind loads of 40 pounds per square foot. Thus, a size was chosen which has a 3,000 ft-lb capacity. Further information regarding this choice is found in Section 3.4.

2.2.3 Tracker

The active sun-seeking electronic tracker used on the system is an inexpensive, simple, and generally reliable unit, Model 404 made by Sunpower Corporation. The electronics includes night-time shutdown and return to wakeup position, cycle timing delay, wide-angle lock-in, and relay switching output. The only drawback with the unit we used was during low temperature operation, when the logic began to function erratically. The problem vanished at temperatures above 50°F (10°C).

2.2.4 Foundation

The foundation simply consists of three massive concrete slugs, one under each of the system's three corners. They are poured in place, with J-bolts located before pouring, and protruding 3" above grade level.

For aesthetics, the concrete was poured into holes and then finished to grade level. In remote sites, the concrete could be poured into forms entirely above grade, as in the photo, Figure 2-1. This will serve two purposes: first, forms for concrete above ground are cheaper than digging holes, and second, additional ground clearance is gained. This reduces the weed-removal requirements by at least half, and in many sites, completely.

2.3 OPTICAL DESIGN

The concentrating optics used in this system were designed specifically for their suitability and compatability with photovoltaic cells. The optics consist of an off-axis section of a parabolic trough primary mirror in conjunction with two segments of ellipses which serve as the secondary optics. Figure 2-6 shows the general optical layout. This is the same optical design used in several other Spectrolab concentrator systems, and has been described in detail[1,2].

At the cells, an optical concentration level of about 16 suns is experienced. The optics has a $\pm 1.5^{\circ}$ field of view in the rotation axis, and a $\pm 25^{\circ}$ field of view in the elevation axis, to achieve full solar utilization throughout the year. The system polar axis is set to Albuquerque's latitude angle, oriented due north. Thus, at the equinoxes, the solar elevation is equal to the polar axis angle and the normal to the optical (rotation) axis.

To fully utilize all the solar cells all year, the primary mirrors extend 25½" beyond the ends of the cell strings. Thus, the system has a $\pm 25^{\circ}$ field of view in elevation. With a system of this focal length, 31.4", the amount of primary mirror in excess of the cell string length is 25½" on each end.

---

1) Final Technical Progress Report for a 10 Kilowatt Concentrator System as Installed at Sandia Laboratories, 1979 by Spectrolab, Inc. Report #SAND 80-7063.
2) System Design Report for a 10 Kilowatt Photovoltaic Concentrator System, by Spectrolab, Inc., May 1978, Report # SAND 78-7025.

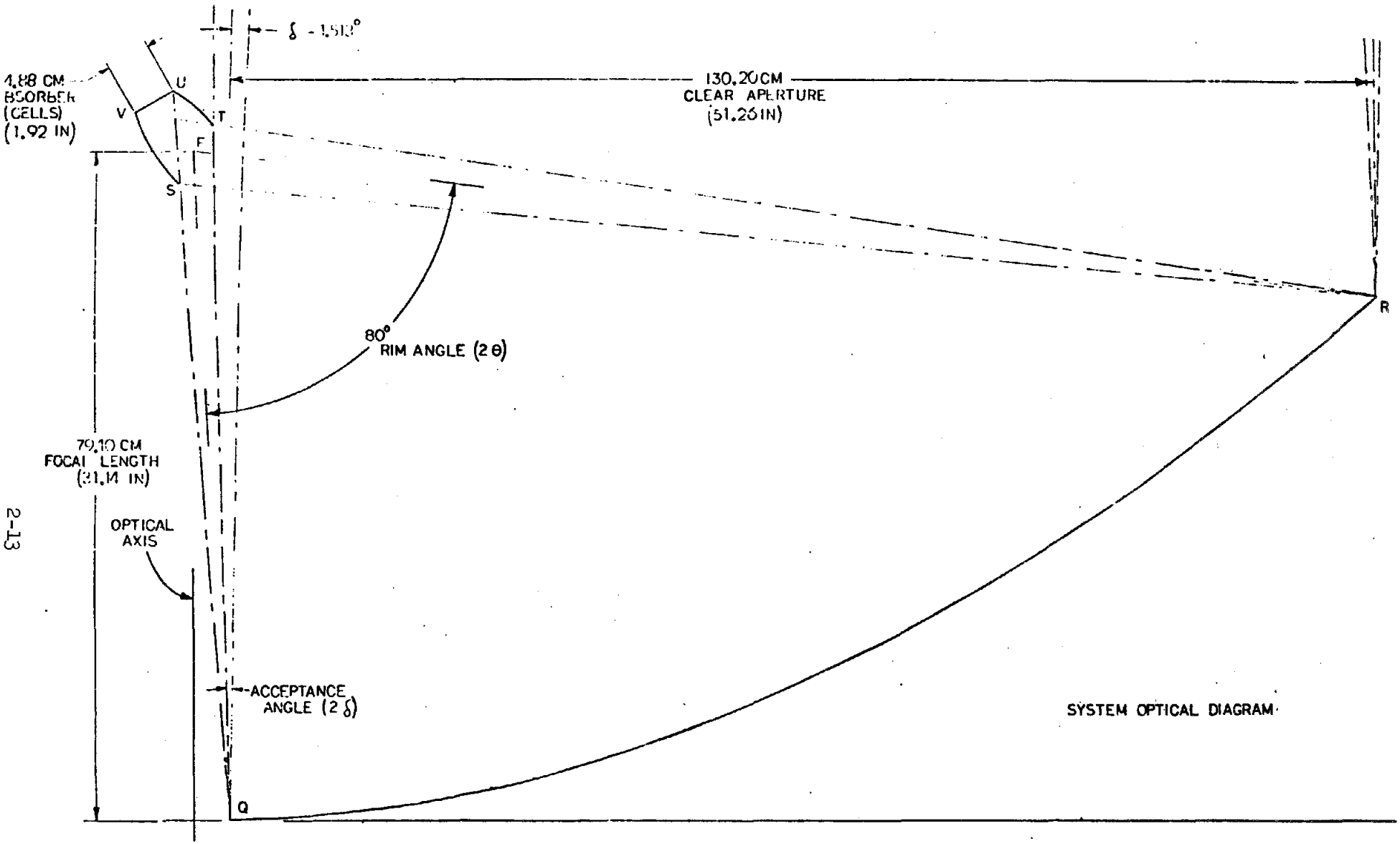

Figure 2-6

System Optical Diagram. Focus is at F.
Field of View Across the Width is 3.02°.

2.4 CELL CONFIGURATION, CELL COOLING SUBSTRATE, AND LAYDOWN TECHNIQUES

2.4.1 Cell Configuration

The photovoltaic devices used on this system are 1.25" x 2.09" rectangular single crystalline N on P silicon solar cells with back surface reflectors, developed especially for use with optical concentration. The cells were fabricated using advanced aerospace cell fabrication and processing techniques. Cell design and manufacturing processes were optimized to achieve high efficiency over the required operating range of 4 to 20 AM1 solar constants. The cell efficiency peaks at values of over 15% between 10 and 15 solar constants.[1,2]

2.4.2 Cooling System Configuration

Cell cooling is accomplished using a heat sink type heat exchanger designed for efficient transfer of energy by convection and radiation to the surroundings. The heat exchanger, in this case, is part of the secondary mirror and cell substrate unit. This unit, made of 6063-T5 aluminum, is extruded with long trapezoidal longitudinal cooling fins. Subsequently, these longitudinal fins are saw-cut laterally across the extrusion to form rectangularly shaped pin fins. Finally, a .0003" thick hard anodizing is applied for greater thermal emissivity. A drawing of this assembly is shown in Figure 2-7.

2.4.3 Cell Interconnection, Laydown and Encapsulation

Each cell string has 54 series connected solar cells separated into three groups of 18. The cells are interconnected by Kovar interconnects which have been plated first with silver, then

(1,2) See references on page 2-10.

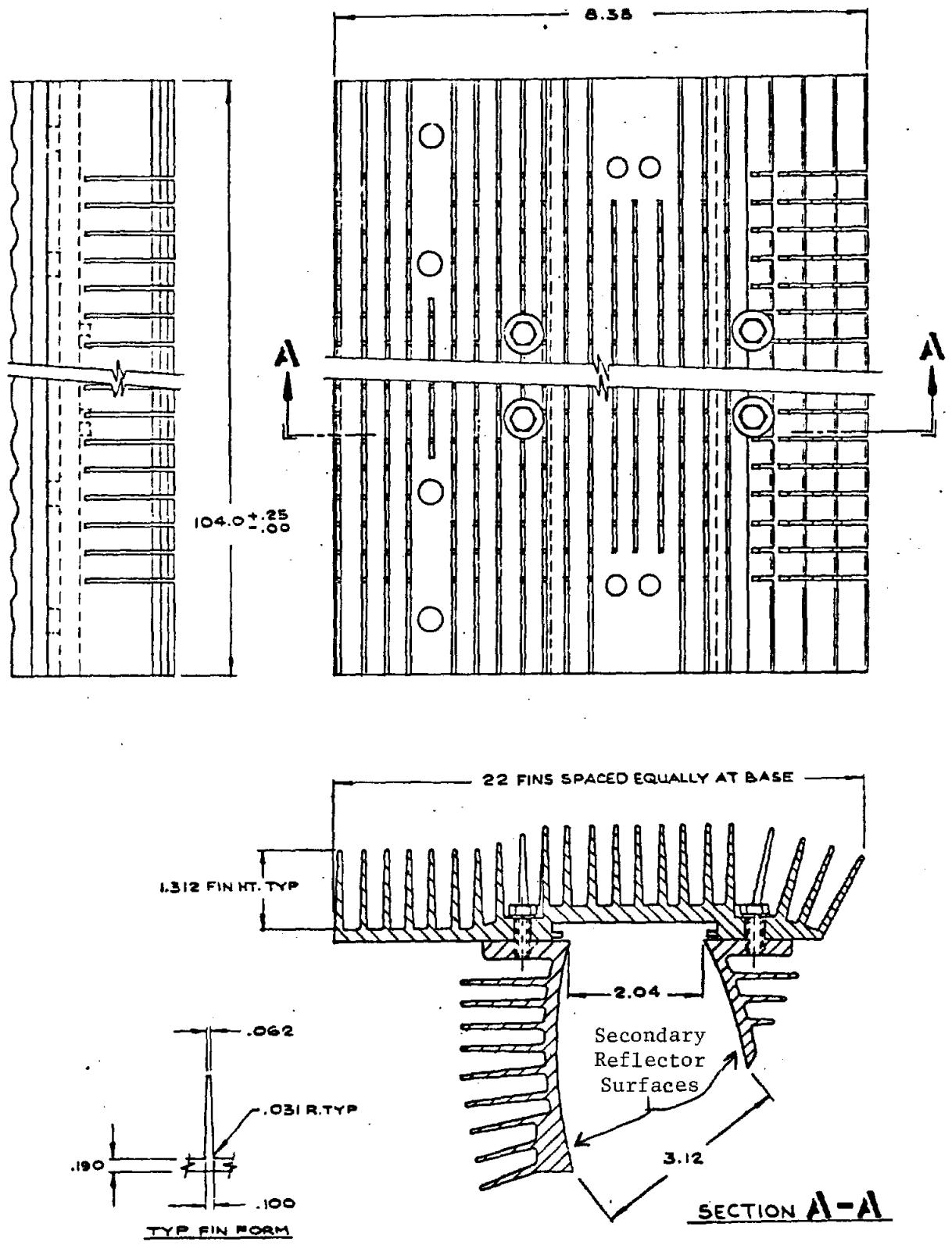

Figure 2-7

Heat Sink-Cell Substrate-Secondary Mirror Design

with solder. The cell string is bonded to the heat sink substrate with a two-step, three layer process. First, Dow Corning 93-500 silicone adhesive is used to bond a .002" thick layer of Micaply, an epoxy-glass laminate dielectric, to the substrate. Then the cell string is bonded to the dielectric with another layer of 93-500. This is detailed in Figure 2-8. The cell string is then encapsulated in a silicone elastomer, G.E. 615 RTV, which also serves to bond protective glass cover panes to the cells and substrate. This is shown in Figure 2-9.

This cell bonding technique, while very durable and of high dielectric strength, does have relatively high thermal impedance. This was felt to be an acceptable trade-off to insure electrical safety and long life. The original system plan included a higher thermal conductivity cell laydown method, but it did not work out. About half of the power loss from the original plan (1/2 of 350-320), 15 watts, was due to these unavoidable higher cell temperatures, as explained in prior referenced reports (1,2).

2.5 ELECTRICAL CONFIGURATION AND LOAD

2.5.1 Electrical Configuration

Electrically, the system is comprised of six electrically isolated circuits. Each circuit has 18 series connected cells, with a peak power of 53 watts. Circuit voltage and current at peak power are 7.85 volts and 6.75 amps, chosen for charging a 6-volt lead-acid battery.

These six circuits feed into a four position switch which allows user selection of system voltage and current level. The choices available are 6, 12, 18, and 36 volt, which relate to all parallel, 3 parallel-2 series, 2 parallel-3 series, or 6 series

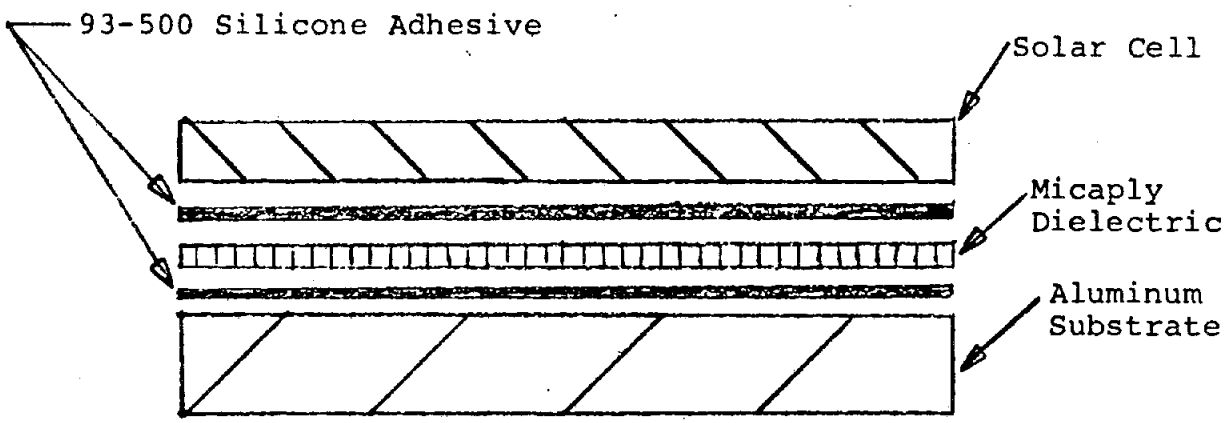

Figure 2-8

Solar cell laydown configuration. Thin layers of adhesive bond dielectric to both Substrate and Solar Cell. (Not to scale)

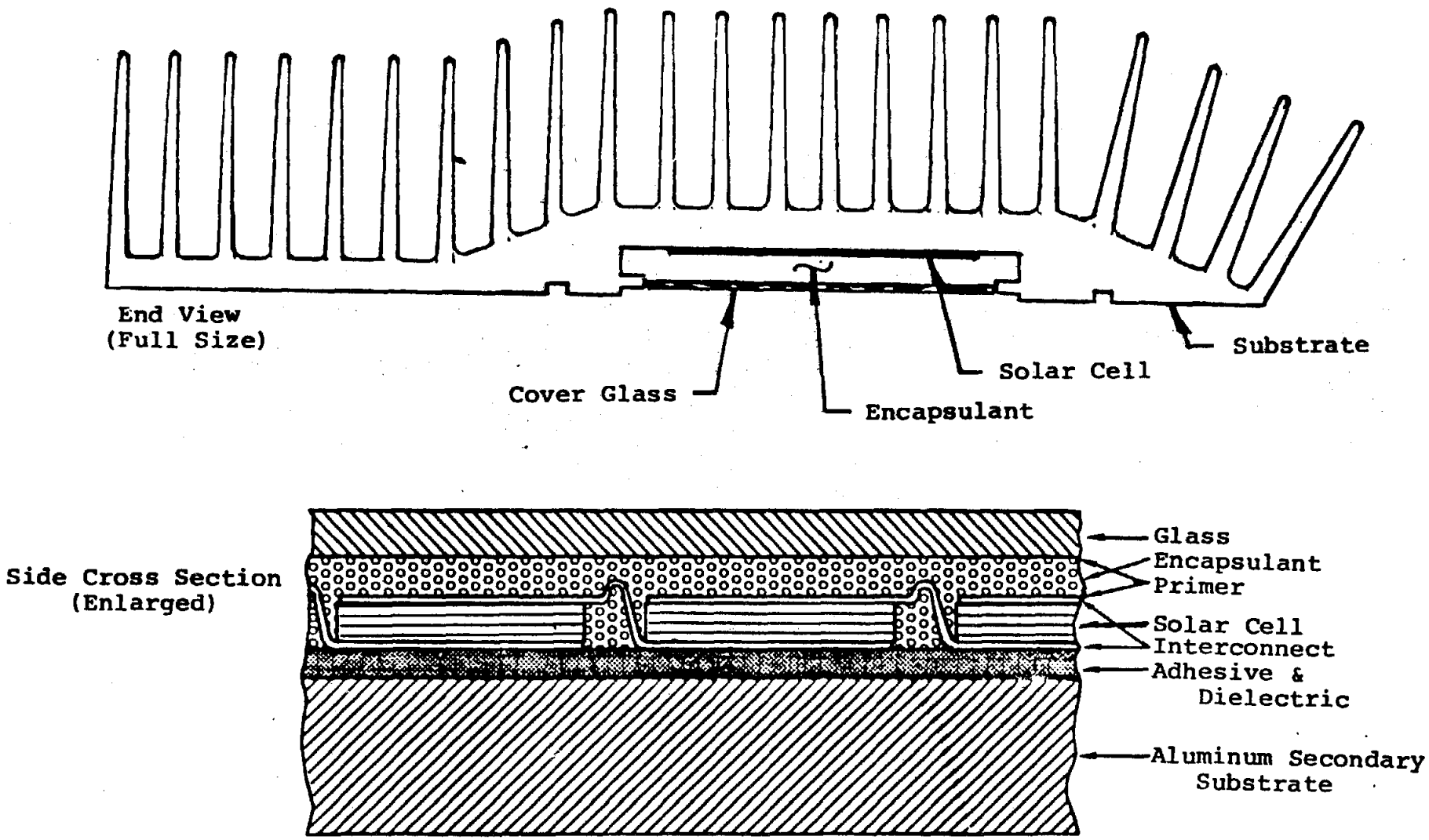

Figure 2-9

Secondary Assembly End View and Side Cross-Section Showing Method of Cell Interconnection, Laydown on Substrate, and Encapsulation. End view is full size. Cross section is enlarged and out of scale to show detail.

connected circuits. This switch was installed to allow experimental variations, but would probably not be included in a production system.

2.5.2 Load

A resistive test load is included in the system, allowing either I-V curves to be generated or a fixed point (fixed impedance) to be monitored. Amp-hour integrators, in the form of mercury microcoulometers are also part of the load, and allow monitoring of both individual circuit and system output over weeks and months. Figure 2-10 is a system electrical schematic, showing circuit, switch, and load interconnections.

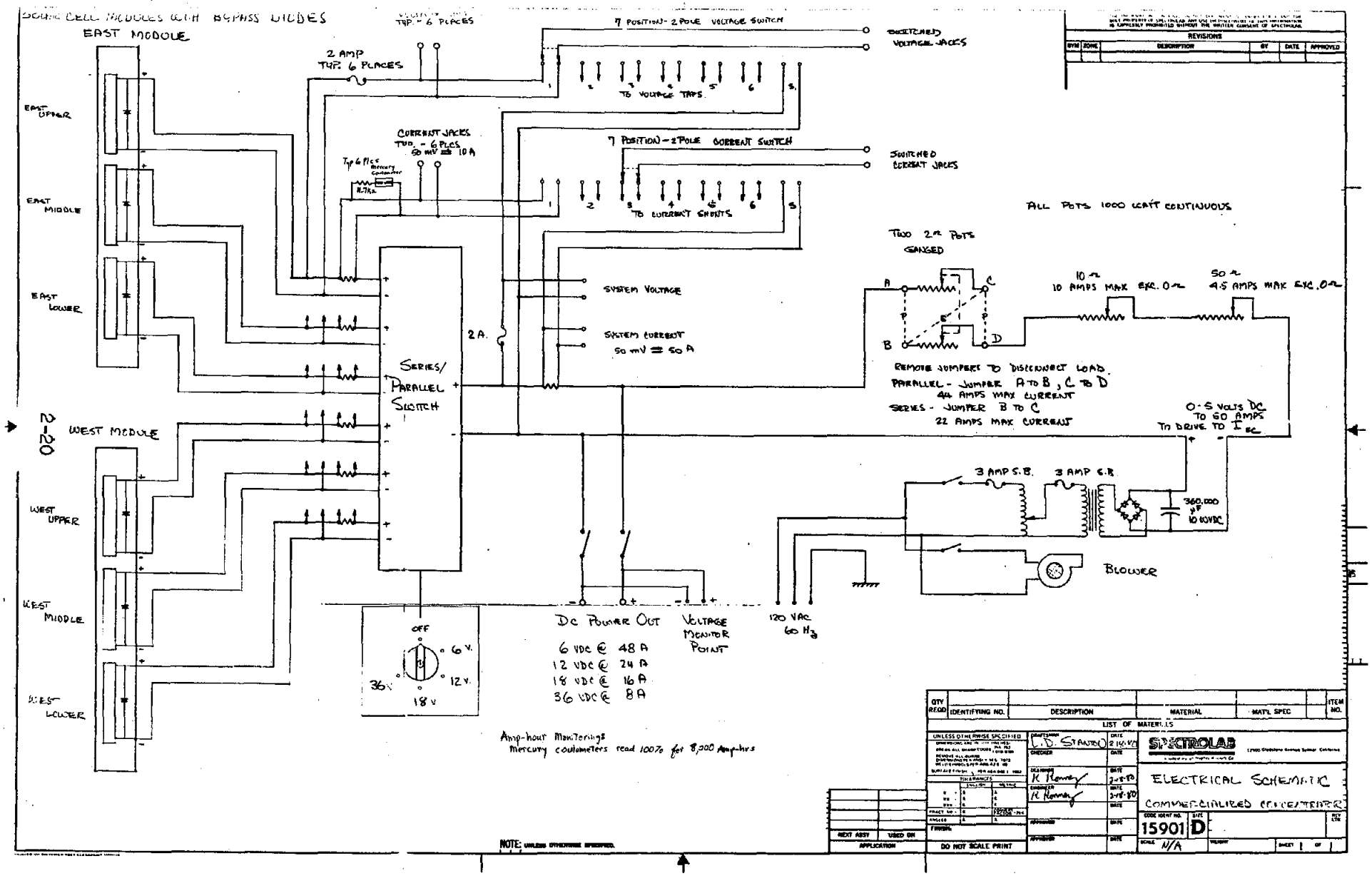

Figure 2-10. System and Load Electrical Schematic, Commercialized Concentrator System

3.0 DESIGN CONSIDERATIONS

The rationale for selected design choices is included in the following subsections.

3.1 LOCATION OF CELL STRINGS

In the proposed system design, the cell strings were located as shown in Figure 3-1, outboard from the mirrors. This design was chosen mainly to permit maximum air flow across the absorbers. The large distance between absorbers also assured negligible thermal interaction between absorbers (i.e., one could not possibly heat the other).

As details of the optical and mechanical design were worked out, several problems with the original design arose. The main problems were:

1. Cell strings would get very close to the ground at sunrise/sunset, making the most delicate system elements highly vulnerable to damage.

2. Mechanical considerations showed this design to be nearly impossible to build without it shadowing itself in a highly deleterious manner.

3. Absorber support requirements were excessive.

4. System moment of inertia was very large.

To alleviate these and other problems, the design evolved into one with the absorbers side by side at the center (see Figures 2-1 and 2-2). Cooling was assured by adequate space between absorbers. Also, experience gained on a concurrent project showed the thermal control not to be quite as sensitive as first believed.

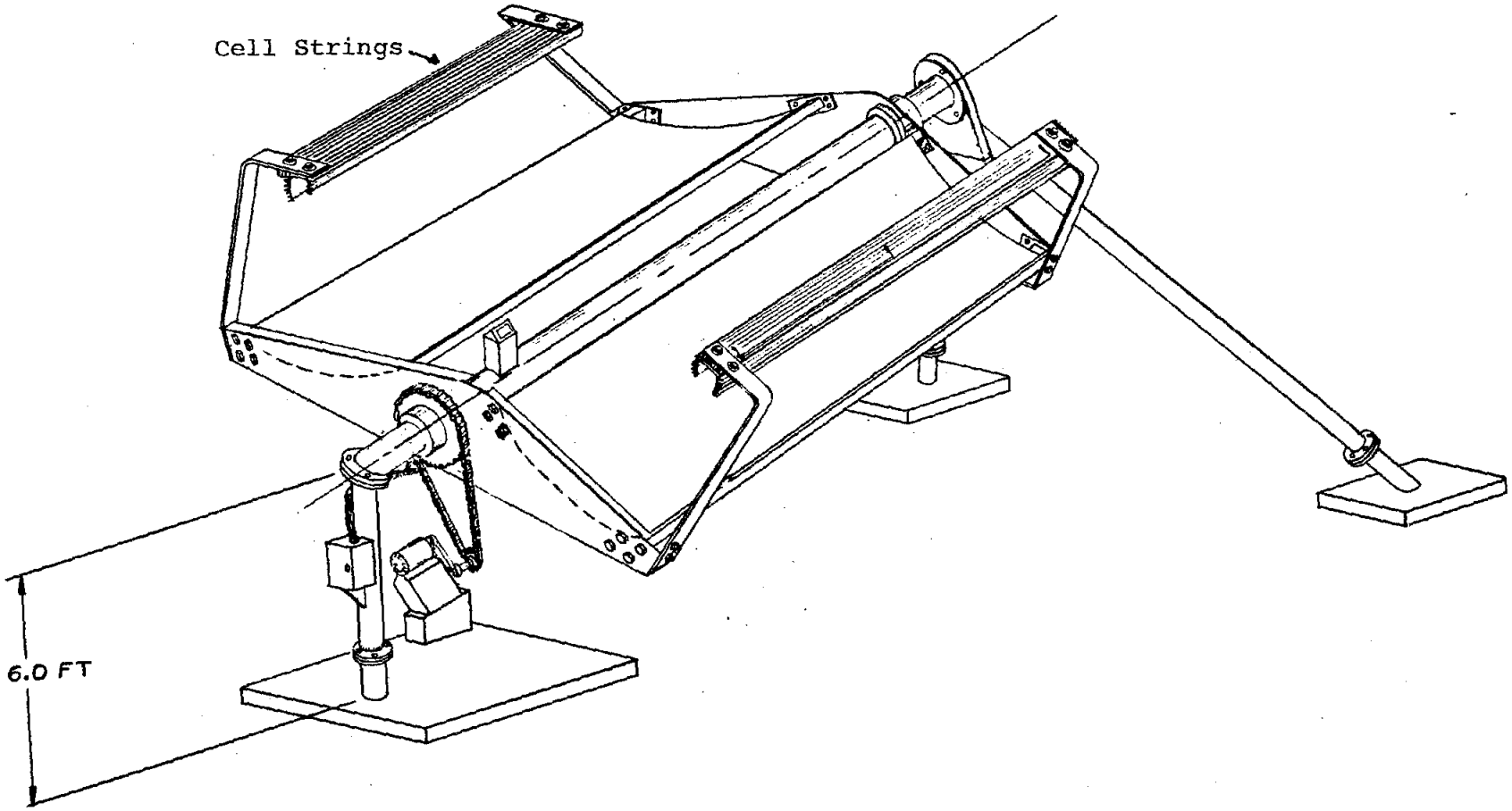

Figure 3-1

Original proposed design showing solar cell absorber units located outboard of mirrors.

3.2 OPTICS/CELL STRING LENGTH

Originally, the system was designed to have a 500 watt peak output, 250 watts per side. This was based on using 78 cells in each string, with a cell string length of 99". Thus, primary mirrors of 150 inches (99" + 51") would have been required. Unfortunately, at the time of manufacture, curing ovens of this size were not available. To maintain use of a one piece aluminum honeycomb mirror required limiting the length to 120". Thus, the cell strings had to be reduced in length to 70", for a total of 54 cells on a size. Thus, the system peak power went down to 54/78, or 69% of original, to 346 watts. Other compromises and materials deficiencies reduced the final system power output to approximately 320 watts.

3.3 SELECTABLE SYSTEM VOLTAGE

Switch selectable system voltage was decided upon for two main reasons:

1. Specific applications were not known, and flexibility was deemed of paramount importance.

2. The various combinations of series, series-parallel, and parallel connections allowed the examination of the effects of cell string matching, system sensitivity to tracking errors, dirt, etc. in a variety of ways.

Table 3-1 shows the various combinations finally chosen.

3.4 TRACKER DRIVE SIZING AND SELECTION

This was one component which had to be based on many assumptions, and then final compromises made.

Table 3-1

Switch Selectable System Voltage Configurations

Nominal System Voltage	# of Circuits in Series	# of Circuits in Parallel	Comments
6	1	6	For charging 6 volt battery.
12	2	3	For charging 12 volt battery.
18	3	2	Each 54 cell absorber in series, then absorbers paralleled.
36	6	1	All series, to compare to 6V mode.

The first problem was to adequately determine the wind-induced torque loads the drive would have to survive. Since the system was polar axis mounted, variations in wind velocities as a function of distance from the ground would, if they existed, cause a net torque on the drive. For instance, if the upper mirror experienced a 50 mile per hour wind, the lower might only experience 30 miles per hour at the same time. Thus, a worst case analysis showed the drive could experience as high as 3,000 ft-lbs of torque.

The "perfect" gearbox would be one which has an ultimate capacity of, say, 4,000 ft-lb, but is sized to run a 100 ft-lb load. This gearbox does not exist. Also, stock gearboxes are not described in terms of ultimate strength. To satisfy our needs without inordinate searching, a stock size commercial gearmotor with a listed operating torque of 3,000 ft-lbs was chosen.

Upon delivery and inspection, it became apparent that that size, while eminently functional, was probably twice as large as really needed. Rather than reorder, the oversize unit was installed.

3.5 CELL SUBSTRATE COOLING

The heat sink cell substrates, as originally designed (reference 2 and Figure 2-7) were to have cross cut slots to enhance convective cooling. Also, a .0003" anodized layer was deemed necessary to enhance radiative cooling. This coating had a very dark color. Although eminently functional, both of these cooling enhancement techniques had the same drawback: they were very costly. The saw cuts cost about $50 per absorber (i.e., 30¢ per watt) and the hard anodizing was about $75 per absorber (50¢ per watt).

An alternative anodizing was obtained on 2 of the 3 absorbers built for this job. It was .0001" thick, and only cost $20 per absorber (13¢/watt). This thin coating was clear, giving the absorber a "natural" aluminum color. The third absorber was anodized with the .0003" process. The saw cuts were eliminated from one absorber, one of the thin anodized ones. Thus, by observing absorber temperature, variations between the different treatments could be observed.

Preliminary tests were done using both the absorbers with saw cuts, one light and one dark colored.

4.0 SYSTEM PERFORMANCE

The performance of the final system configuration is shown in a progression from plan through manufacturing through outdoor tests.

4.1 ORIGINAL PERFORMANCE GOALS

The original goal for this system was 500 watts peak power at Standard Environmental Test Conditions (SETC) of 28°C ambient, 1000 W/m^2 insolation, and 1 meter/second wind. Since the overall system size was scaled down by about 30%, final output decreased accordingly.

4.2 PULSE SIMULATOR TESTS

To verify our manufacturing assembly processes, each section of each of the three cell strings was pulse tested at 100 mW/cm^2 and at a high level, near 20 x AM1. These tests were done to enable comparison between cell strings, and to observe thermal effects during outdoor operation.

Figures 4-1 through 4-12 are the indoor pulse I-V curves. Table 4-1 tabulates this data and includes efficiency calculations.

From the V_{oc} of test #1 versus #5 and #9, we observe a low voltage module, low by about .54 volts. This carries through into test #2, where the (-)1/3 string is about .5 volt below the others in that module. This clearly indicates a shorted cell in the (-)1/3 string. See Figure 4-13.

This shorted cell also causes lower efficiency in that module (S/N 001) and the (-)1/3 string.

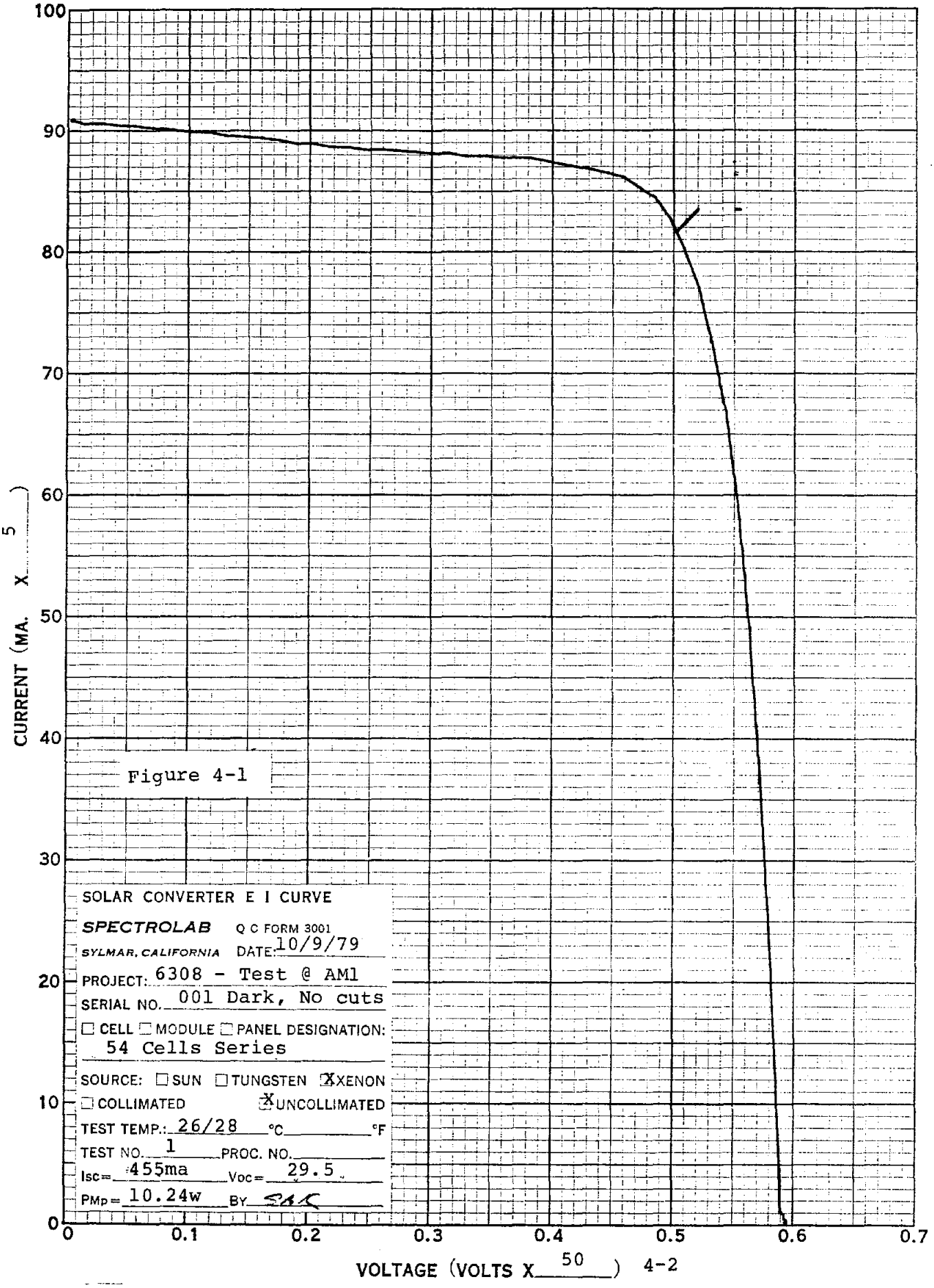
100
90
80
70
60
50
40
30
20
10
0
CURRENT (MA. X 5)
0
0.1
0.2
0.3
0.4
0.5
0.6
0.7
VOLTAGE (VOLTS X 50)
SOLAR CONVERTER E I CURVE
SPECTROLAB
SYLMAR, CALIFORNIA
Q C FORM 3001
DATE: 10/9/79
PROJECT: 6308 - Test @ AM1
SERIAL NO. 001 Dark, No cuts
☐ CELL ☐ MODULE ☐ PANEL DESIGNATION:
54 Cells Series
SOURCE: ☐ SUN ☐ TUNGSTEN ☒ XENON
☐ COLLIMATED ☒ UNCOLLIMATED
TEST TEMP.: 26/28 °C °F
TEST NO. 1 PROC. NO.
Isc= 455ma Voc= 29.5
PMp= 10.24w BY SAC

Figure 4-1

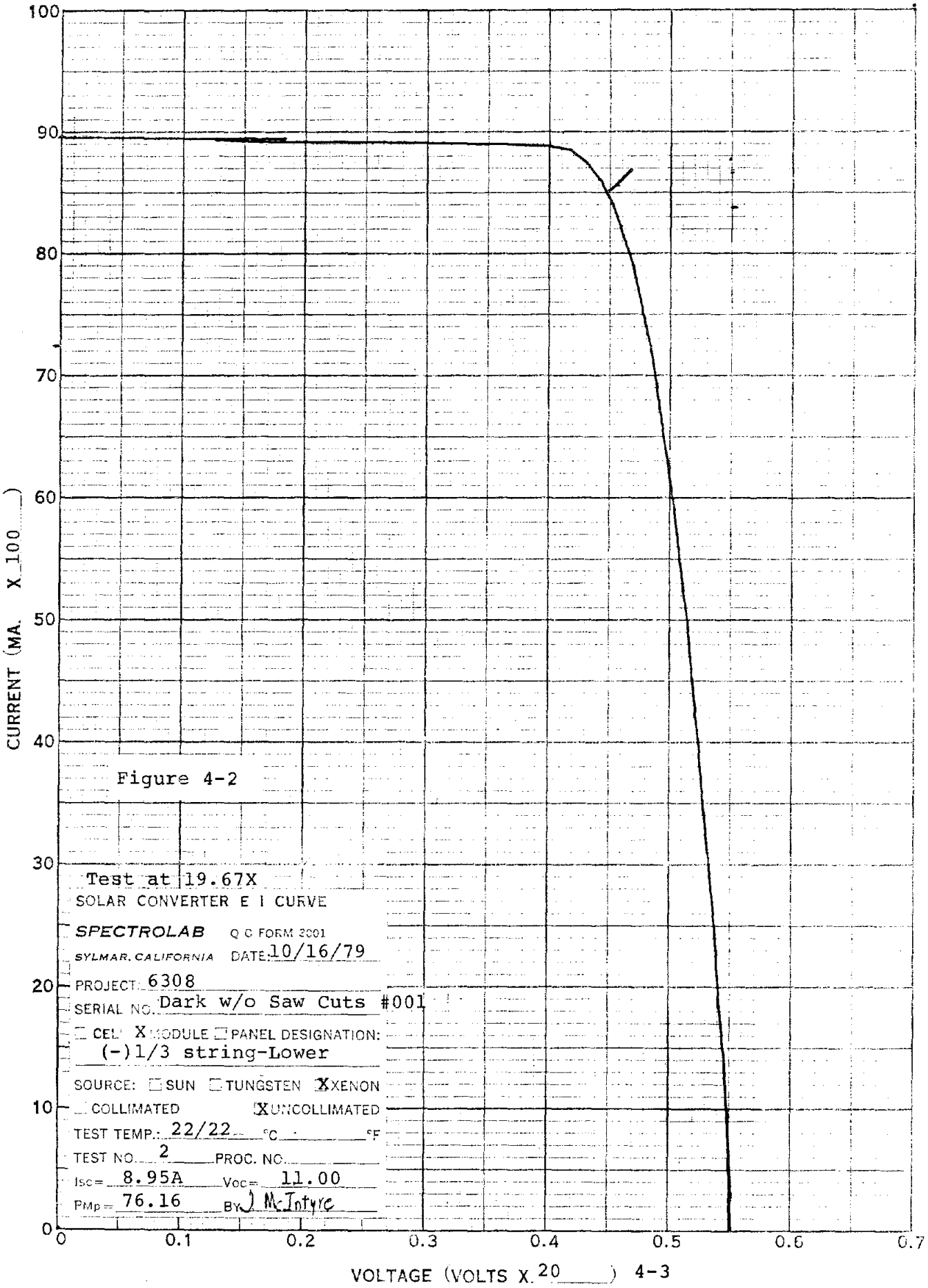
100
90
80
70
60
50
40
30
20
10
0
CURRENT (MA. X 100)
0
0.1
0.2
0.3
0.4
0.5
0.6
0.7
VOLTAGE (VOLTS X 20)
Figure 4-2
Test at 19.67X
SOLAR CONVERTER E I CURVE
SPECTROLAB
Q C FORM 2001
SYLMAR, CALIFORNIA
DATE: 10/16/79
PROJECT: 6308
SERIAL NO. Dark w/o Saw Cuts #001
CELL X MODULE PANEL DESIGNATION:
(-)1/3 string-Lower
SOURCE: SUN TUNGSTEN XXENON
COLLIMATED XUNCOLLIMATED
TEST TEMP.: 22/22 °C °F
TEST NO. 2 PROC. NO.
Isc = 8.95A Voc = 11.00
PMp = 76.16 BY J McIntyre

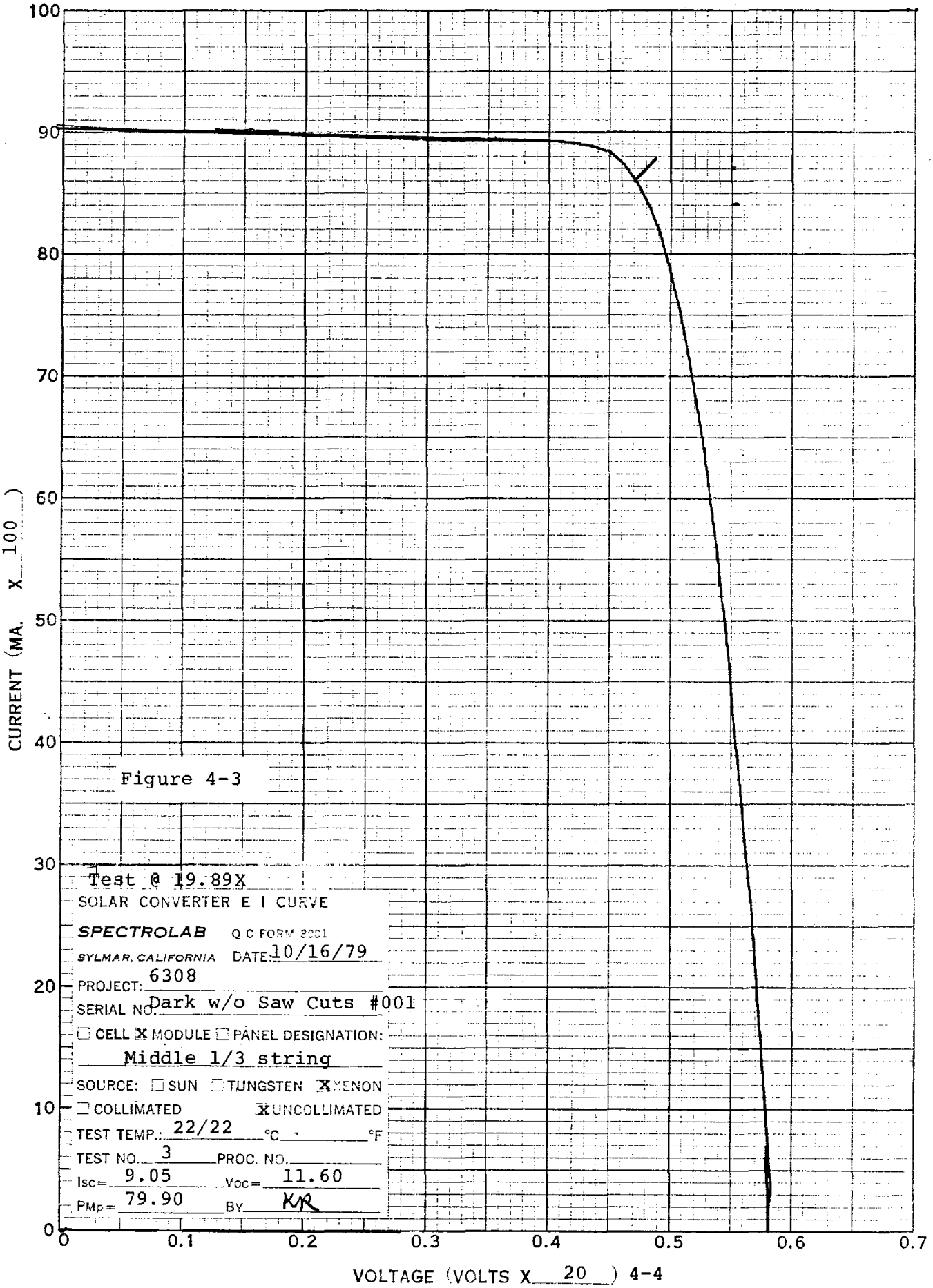
100
90
80
70
60
50
40
30
20
10
0
CURRENT (MA. X 100)
0
0.1
0.2
0.3
0.4
0.5
0.6
0.7
VOLTAGE (VOLTS X 20)
Test @ 19.89X
SOLAR CONVERTER E I CURVE
SPECTROLAB
Q C FORM 3001
SYLMAR, CALIFORNIA
DATE: 10/16/79
PROJECT: 6308
SERIAL NO: Dark w/o Saw Cuts #001
☐ CELL ☒ MODULE ☐ PANEL DESIGNATION:
Middle 1/3 string
SOURCE: ☐ SUN ☐ TUNGSTEN ☒ XENON
☐ COLLIMATED ☒ UNCOLLIMATED
TEST TEMP.: 22/22 °C °F
TEST NO. 3 PROC. NO.
Isc= 9.05 Voc= 11.60
PMp= 79.90 BY KR

Figure 4-3

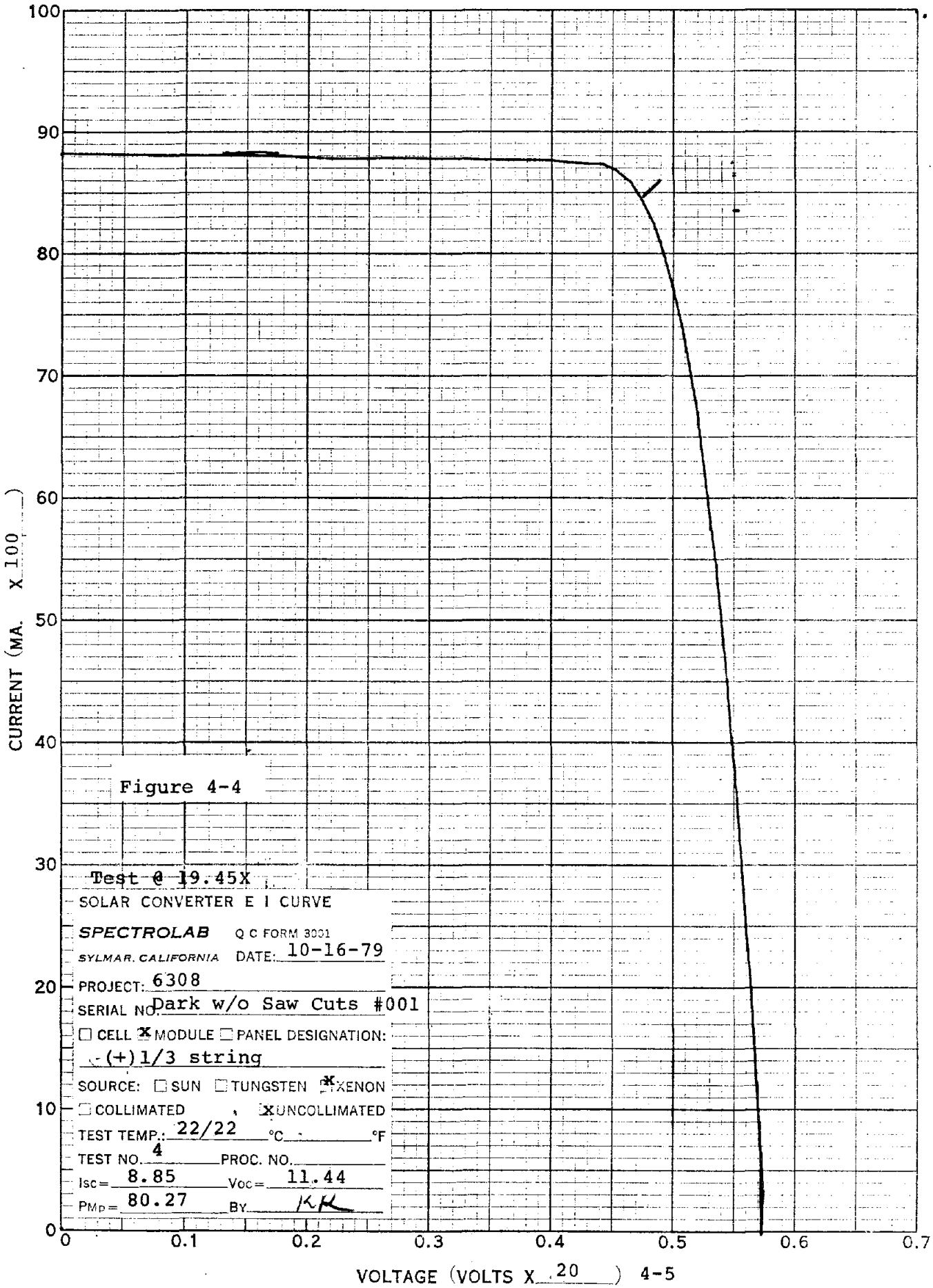
100
90
80
70
60
50
40
30
20
10
0
CURRENT (MA. X 100)
0
0.1
0.2
0.3
0.4
0.5
0.6
0.7
VOLTAGE (VOLTS X 20)
Test @ 19.45X
SOLAR CONVERTER E I CURVE
SPECTROLAB
Q C FORM 3001
SYLMAR, CALIFORNIA
DATE: 10-16-79
PROJECT: 6308
SERIAL NO. Dark w/o Saw Cuts #001
☐ CELL ☒ MODULE ☐ PANEL DESIGNATION:
(+)1/3 string
SOURCE: ☐ SUN ☐ TUNGSTEN ☒ XENON
☐ COLLIMATED ☒ UNCOLLIMATED
TEST TEMP.: 22/22 °C °F
TEST NO. 4 PROC. NO.
Isc = 8.85 Voc = 11.44
PMP = 80.27 BY KK

Figure 4-4

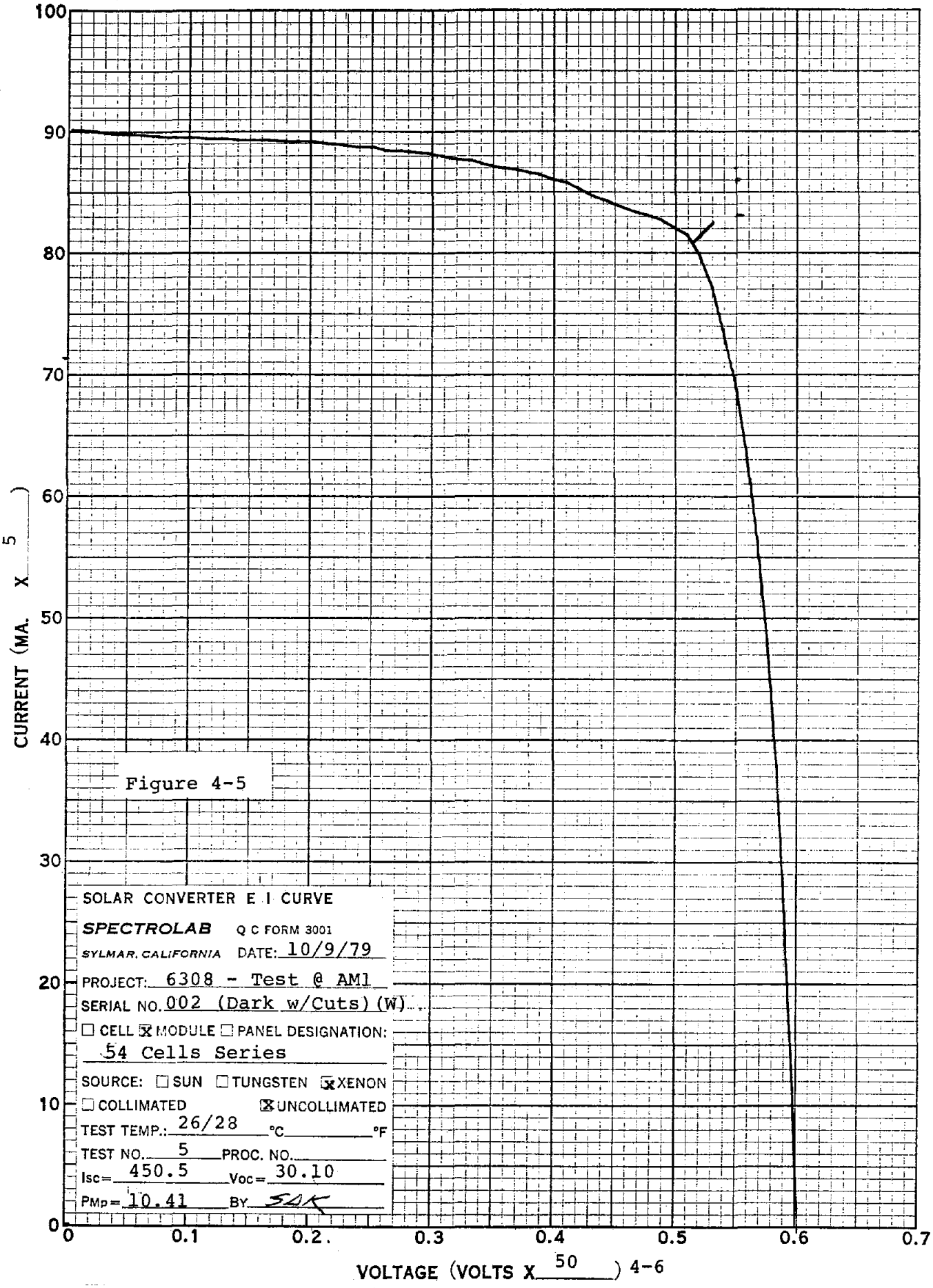
100
90
80
70
60
50
40
30
20
10
0
CURRENT (MA. X 5)
0
0.1
0.2
0.3
0.4
0.5
0.6
0.7
VOLTAGE (VOLTS X 50)
SOLAR CONVERTER E I CURVE
SPECTROLAB Q C FORM 3001
SYLMAR, CALIFORNIA DATE: 10/9/79
PROJECT: 6308 - Test @ AM1
SERIAL NO. 002 (Dark w/Cuts) (W)
☐ CELL ☒ MODULE ☐ PANEL DESIGNATION:
54 Cells Series
SOURCE: ☐ SUN ☐ TUNGSTEN ☒ XENON
☐ COLLIMATED ☒ UNCOLLIMATED
TEST TEMP.: 26/28 °C °F
TEST NO. 5 PROC. NO.
Isc= 450.5 Voc= 30.10
PMp= 10.41 BY SAK

Figure 4-5

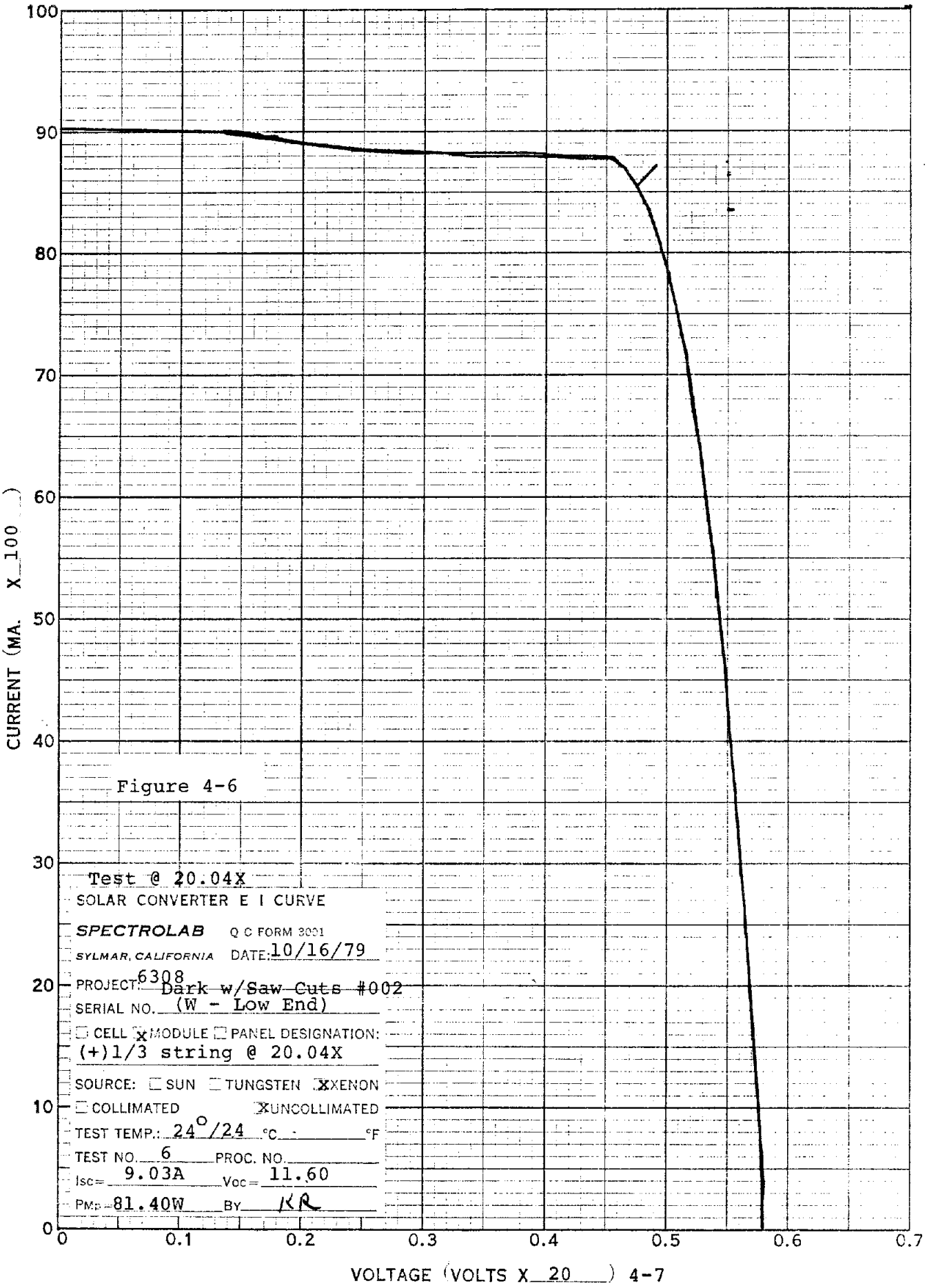
100
90
80
70
60
50
40
30
20
10
0
CURRENT (MA. X 100)
0
0.1
0.2
0.3
0.4
0.5
0.6
0.7
VOLTAGE (VOLTS X 20)
Figure 4-6
Test @ 20.04X
SOLAR CONVERTER E I CURVE
SPECTROLAB
Q C FORM 3001
SYLMAR, CALIFORNIA
DATE: 10/16/79
PROJECT: 6308
Dark w/Saw Cuts #002
SERIAL NO. (W - Low End)
CELL X MODULE PANEL DESIGNATION:
(+)1/3 string @ 20.04X
SOURCE: SUN TUNGSTEN XXENON
COLLIMATED XUNCOLLIMATED
TEST TEMP.: 24°/24 °C °F
TEST NO. 6 PROC. NO.
Isc= 9.03A Voc= 11.60
PMp= 81.40W BY KR

4-7

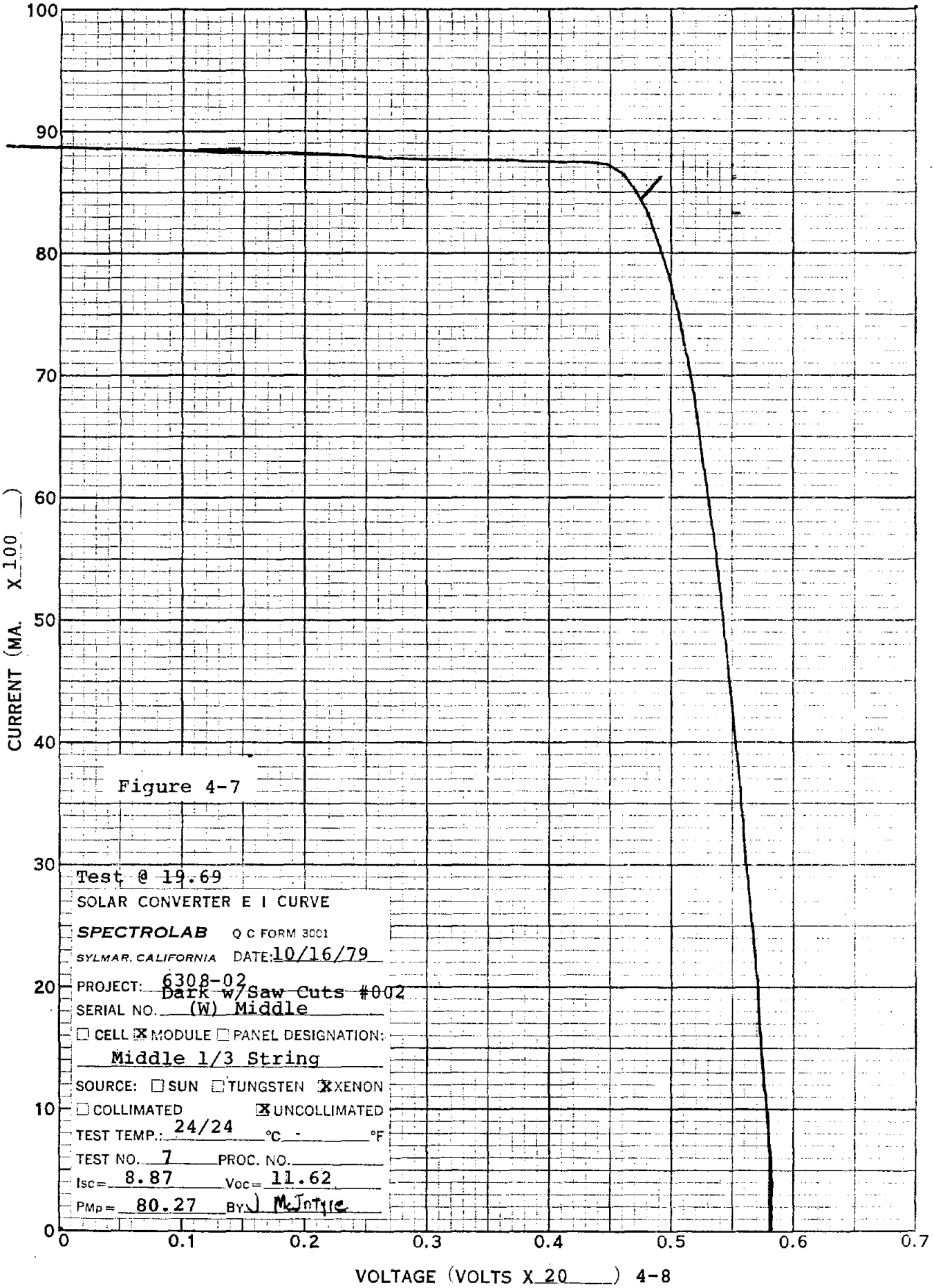
100
90
80
70
60
50
40
30
20
10
0
CURRENT (MA. X 100)
0
0.1
0.2
0.3
0.4
0.5
0.6
0.7
VOLTAGE (VOLTS X 20)
Figure 4-7
Test @ 19.69
SOLAR CONVERTER E I CURVE
SPECTROLAB Q C FORM 3001
SYLMAR, CALIFORNIA DATE: 10/16/79
PROJECT: 6308-02
Dark w/Saw Cuts #002
SERIAL NO. (W) Middle
☐ CELL ☒ MODULE ☐ PANEL DESIGNATION:
Middle 1/3 String
SOURCE: ☐ SUN ☐ TUNGSTEN ☒ XENON
☐ COLLIMATED ☒ UNCOLLIMATED
TEST TEMP.: 24/24 °C - °F
TEST NO. 7 PROC. NO.
Isc = 8.87 Voc = 11.62
PMp = 80.27 BY J McIntyre

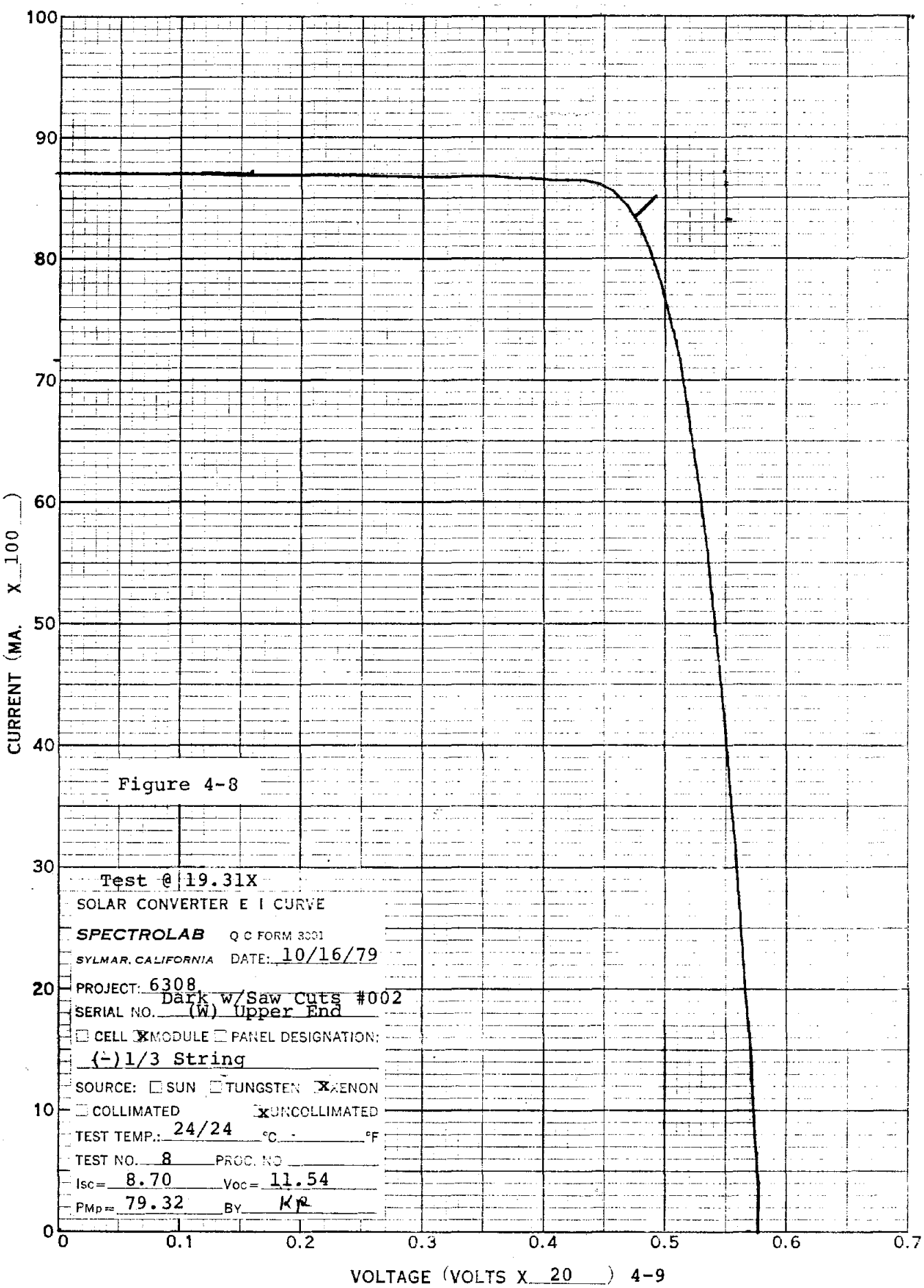
100
90
80
70
60
50
40
30
20
10
0
CURRENT (MA. X 100)
0
0.1
0.2
0.3
0.4
0.5
0.6
0.7
VOLTAGE (VOLTS X 20)
Test @ 19.31X
SOLAR CONVERTER E I CURVE
SPECTROLAB
Q C FORM 3031
SYLMAR, CALIFORNIA
DATE: 10/16/79
PROJECT: 6308
SERIAL NO. Dark w/Saw Cuts #002 (W) Upper End
☐ CELL ☒ MODULE ☐ PANEL DESIGNATION:
(-)1/3 String
SOURCE: ☐ SUN ☐ TUNGSTEN ☒ XENON
☐ COLLIMATED ☒ UNCOLLIMATED
TEST TEMP.: 24/24 °C °F
TEST NO. 8 PROC. NO
Isc = 8.70 Voc = 11.54
PMp = 79.32 BY KR

Figure 4-8

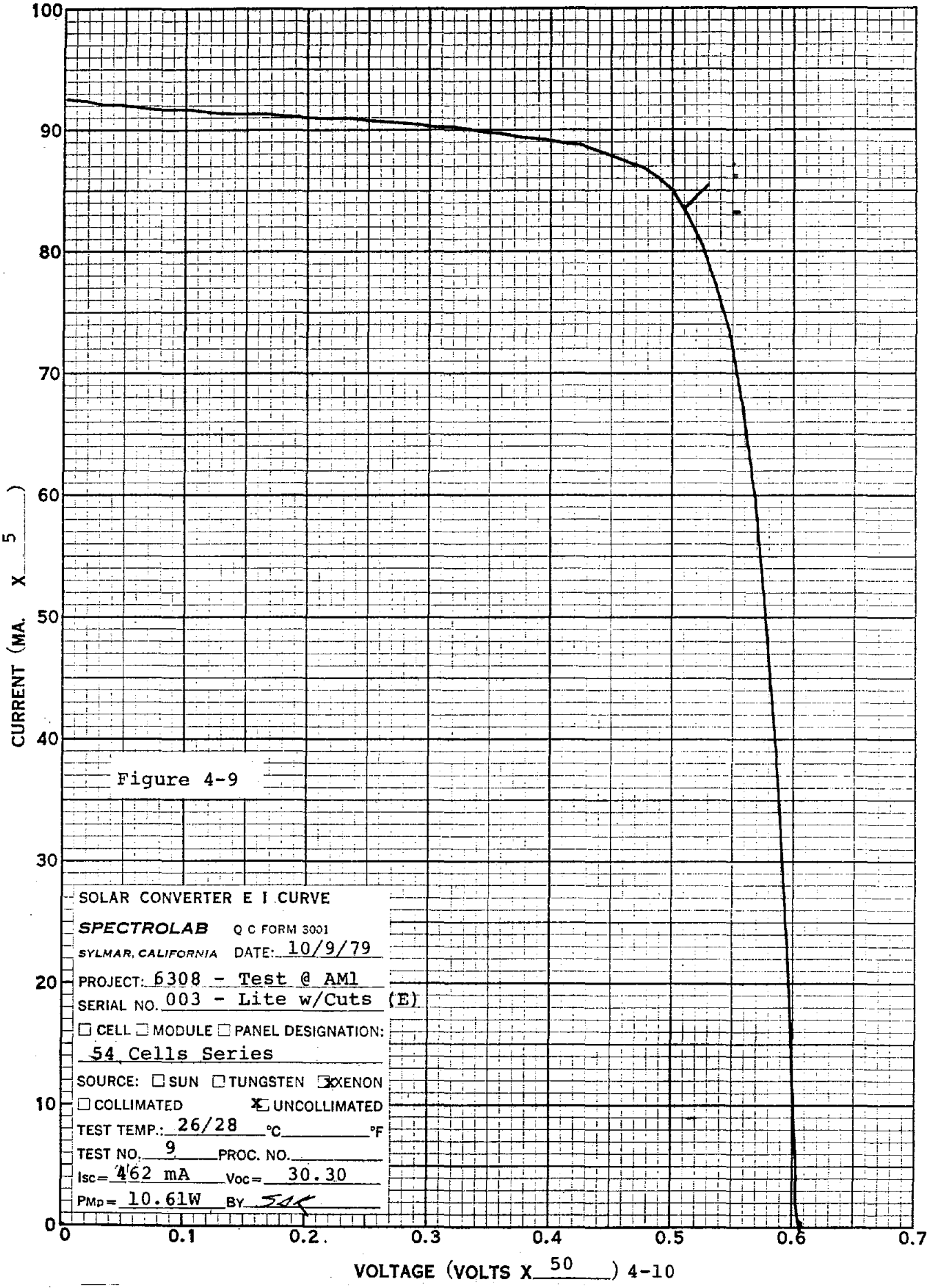
100
90
80
70
60
50
40
30
20
10
0
CURRENT (MA. X 5)
0
0.1
0.2
0.3
0.4
0.5
0.6
0.7
VOLTAGE (VOLTS X 50) 4-10
SOLAR CONVERTER E I CURVE
SPECTROLAB Q C FORM 3001
SYLMAR, CALIFORNIA DATE: 10/9/79
PROJECT: 6308 - Test @ AM1
SERIAL NO. 003 - Lite w/Cuts (E)
☐ CELL ☐ MODULE ☐ PANEL DESIGNATION:
54 Cells Series
SOURCE: ☐ SUN ☐ TUNGSTEN ☒ XENON
☐ COLLIMATED ☒ UNCOLLIMATED
TEST TEMP.: 26/28 °C °F
TEST NO. 9 PROC. NO.
Isc= 462 mA Voc= 30.30
PMp= 10.61W BY

Figure 4-9

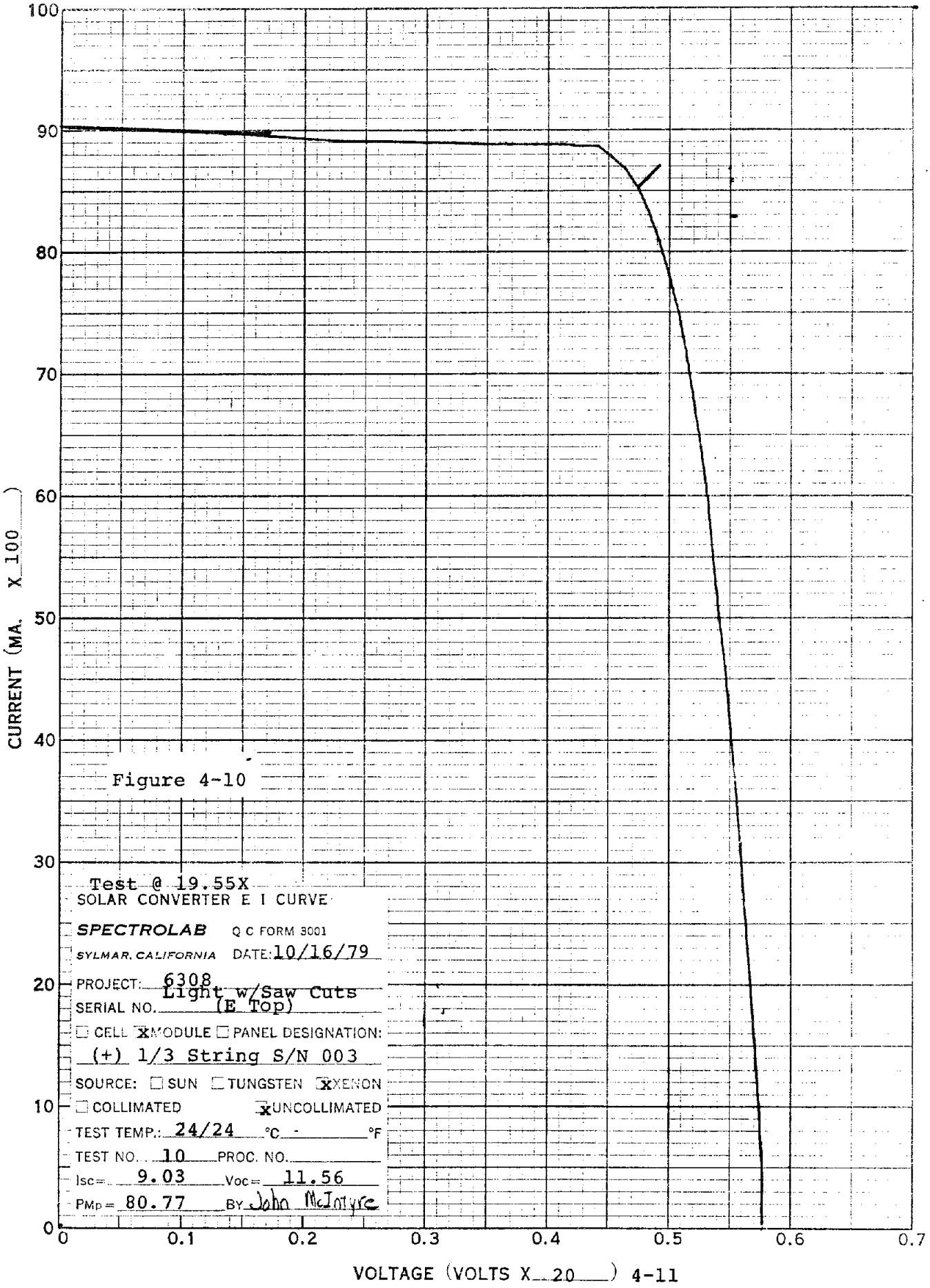
CURRENT (MA. X 100)
VOLTAGE (VOLTS X 20)
0
10
20
30
40
50
60
70
80
90
100
0
0.1
0.2
0.3
0.4
0.5
0.6
0.7
Test @ 19.55X
SOLAR CONVERTER E I CURVE
SPECTROLAB
Q C FORM 3001
SYLMAR, CALIFORNIA
DATE: 10/16/79
PROJECT: 6308
SERIAL NO. Light w/Saw Cuts (E Top)
☐ CELL ☒ MODULE ☐ PANEL DESIGNATION:
(+) 1/3 String S/N 003
SOURCE: ☐ SUN ☐ TUNGSTEN ☒ XENON
☐ COLLIMATED ☒ UNCOLLIMATED
TEST TEMP.: 24/24 °C - °F
TEST NO. 10 PROC. NO.
Isc = 9.03 Voc = 11.56
PMp = 80.77 BY John McIntyre

Figure 4-10

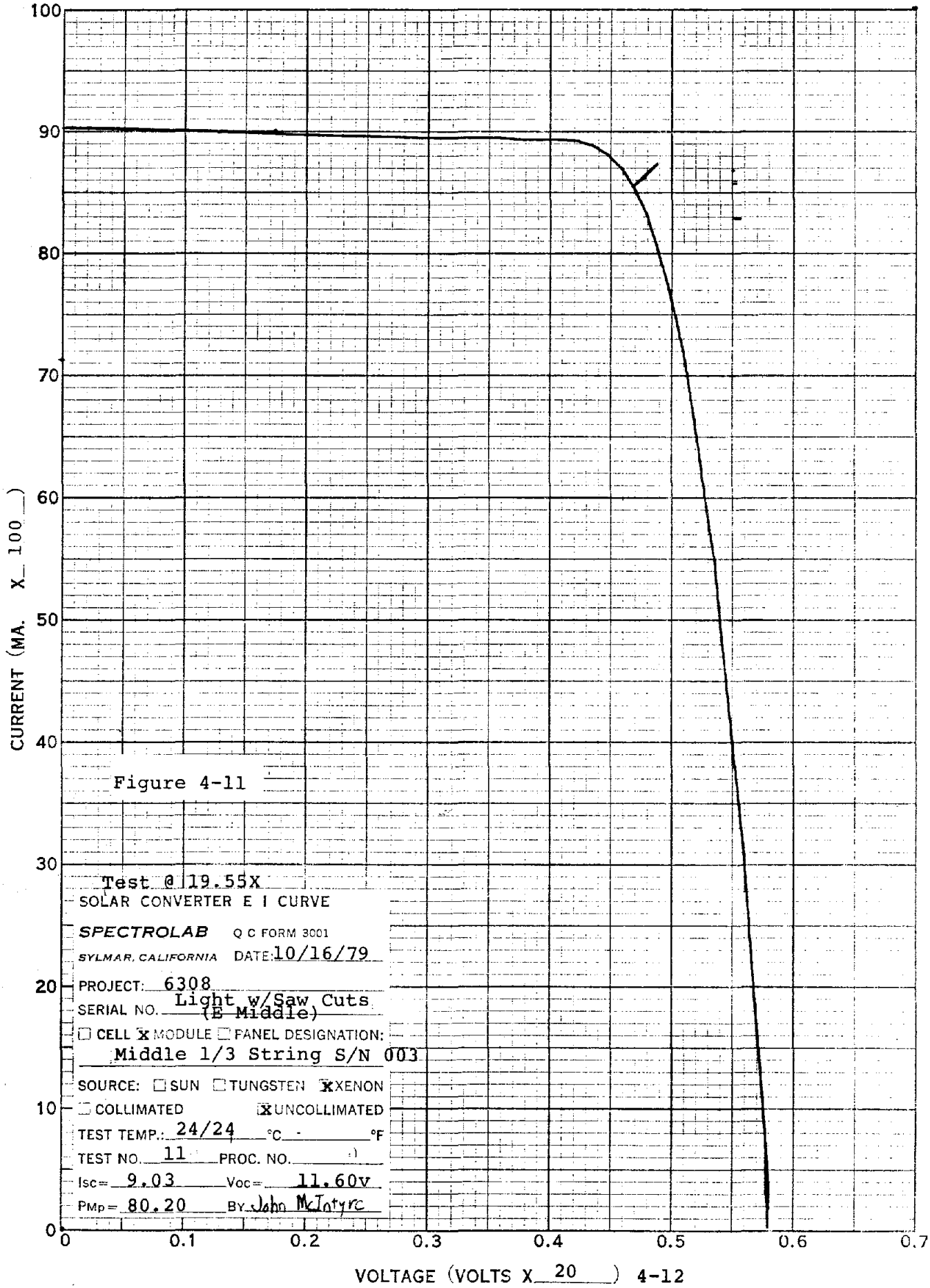

Figure 4-11

4-12

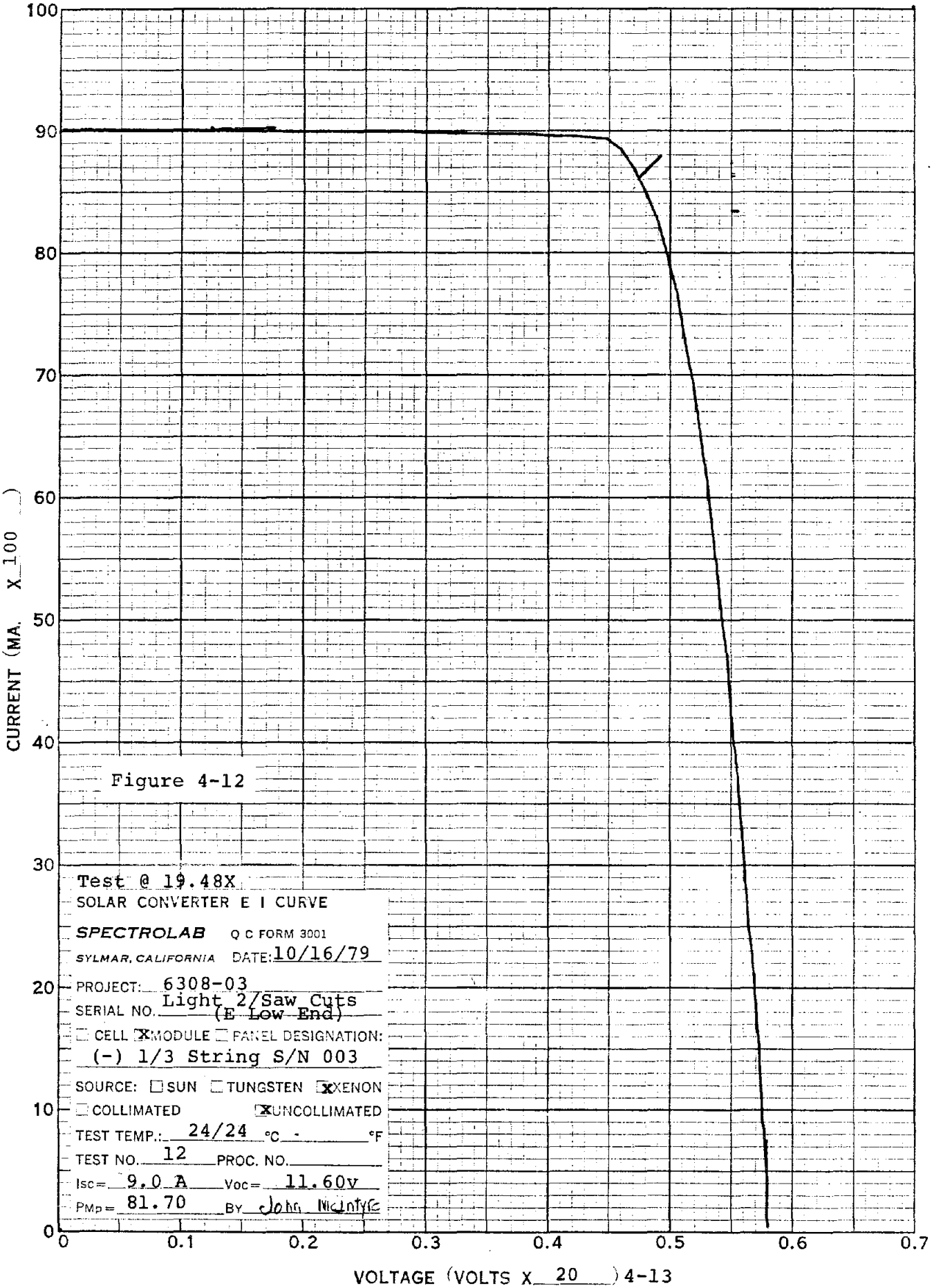
100
90
80
70
60
50
40
30
20
10
0
CURRENT (MA. X 100)
0
0.1
0.2
0.3
0.4
0.5
0.6
0.7
VOLTAGE (VOLTS X 20)
Test @ 19.48X
SOLAR CONVERTER E I CURVE
SPECTROLAB Q C FORM 3001
SYLMAR, CALIFORNIA DATE: 10/16/79
PROJECT: 6308-03
SERIAL NO. Light 2/Saw Cuts (E Low End)
☐ CELL ☒ MODULE ☐ PANEL DESIGNATION:
(-) 1/3 String S/N 003
SOURCE: ☐ SUN ☐ TUNGSTEN ☒ XENON
☐ COLLIMATED ☒ UNCOLLIMATED
TEST TEMP.: 24/24 °C - °F
TEST NO. 12 PROC. NO.
Isc = 9.0 A Voc = 11.60v
PMp = 81.70 BY John McIntyre

Figure 4-12

Table 4-1

PULSE SIMULATOR TEST RESULTS

Module #, Section	Test #	I_{sc} Amps	V_{oc} Volts	P_{max} Watts	Conc. Level	Efficiency %	Temp* °C	Color Finish
001, All 3	1	.455	29.55	10.24	1.00	11.76	28	Dark w/o Cuts
001, (-)1/3	2	8.95	11.00	76.16	19.67	13.34@	22	
001, mid-1/3	3	9.05	11.60	79.90	19.98	13.77	22	
001, (+)1/3	4	8.85	11.44	80.27	19.45	14.21	22	
002, All 3	5	.4505	30.10	10.41	1.00	11.95	28	Dark w/Cuts
002, (+)1/3	6	9.03	11.60	81.40	20.04	13.99	24	
002, Mid-1/3	7	8.87	11.62	80.27	19.69	14.04	24	
002, (-)1/3	8	8.70	11.54	79.32	19.31	14.15	24	
003, All 3	9	.462	30.03	10.61	1.00	12.18	28	Light w/Cuts
003, (+)1/3	10	9.03	11.56	80.77	19.55	14.23	24	
003, Mid-1/3	11	9.03	11.60	80.20	19.55	14.13	24	
003, (-)1/3	12	9.00	11.60	81.70	19.48	14.45	24	

*On 1 sun tests, LAPSS computer normalized all tests to 28°C. Others were not normalized

@From the V_{oc} it is obvious that one cell is shorted internally, thus only 17 cells are working. Calculation is for the area of 18 cells.

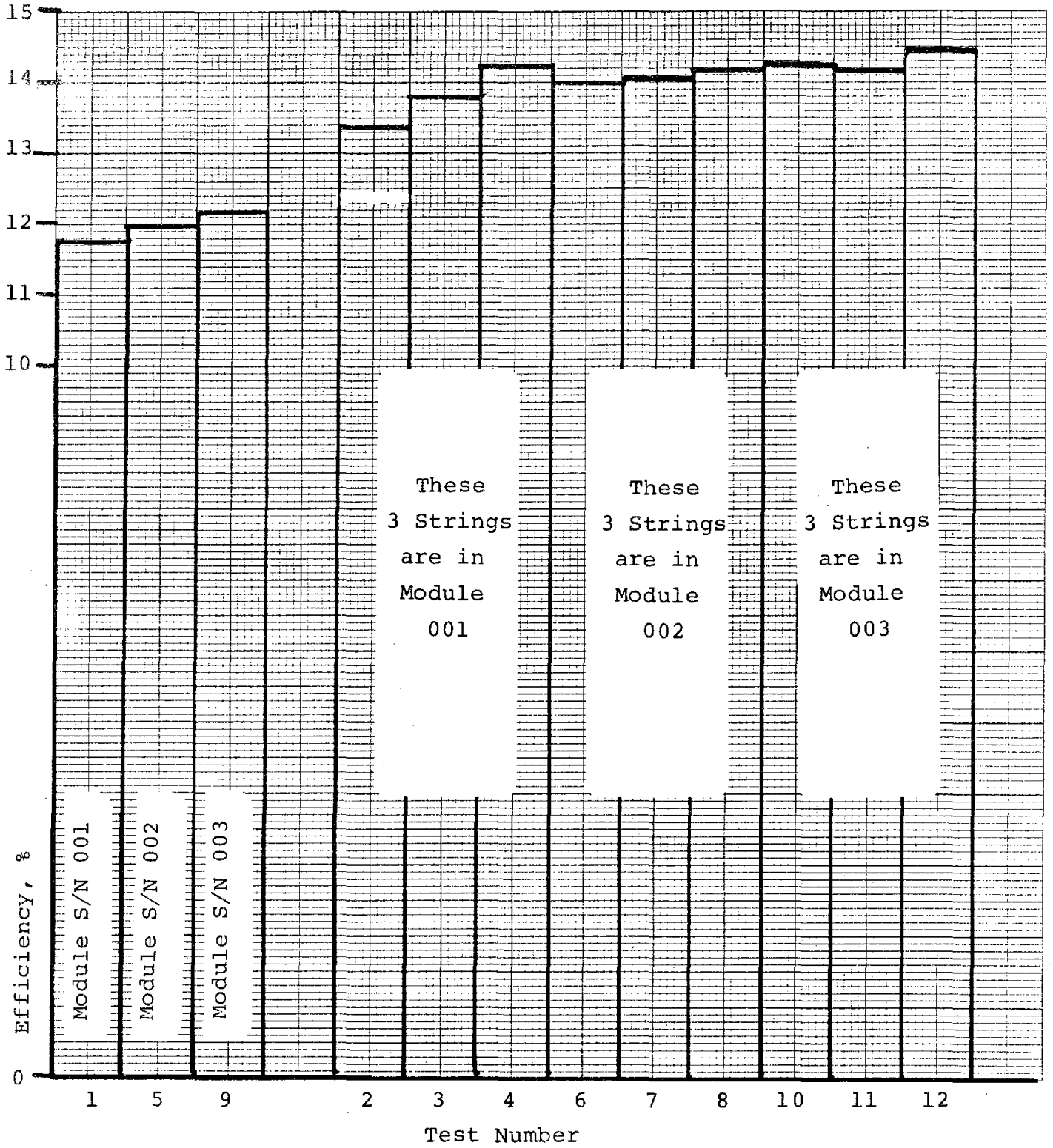

Figure 4-13

Module and String Efficiencies, indoors. Module tests, 54 cells in series taken at AM1, corrected to 28°C, in pulse simulator, tests #1, 5, and 9. 18-cell strings tested at 19.5 to 20.1 suns, pulsed, at 22 to 24°C. String in test #2 has 1 shorted cell. It is part of the module in test #1.

The average efficiency of the eight other 18-cell strings at near 20 suns is 14.08%. This is an intensity level about 30% above the design maximum efficiency point. Peak efficiency at 12 to 14 suns (on single cells) was 14.5 to 15%.

4.3 OUTDOOR TEST RESULTS

4.3.1 Electrical Performance

Outdoor testing took place on several dates, with final acceptance tests being completed on January 21, 1981 at Sandia Laboratories. Figures 4-14 through 4-17 are system I-V curves while in the various voltage modes at Sandia. Table 4-2 summarizes all outdoor test data.

The outdoor tests at Sandia were all performed on January 21, 1981, when the angle between the sun and the optical (rotation) axis was approximately 20°. Thus, system power was reduced by the cosine of 20° (.939) from that of the equinoxes at equal insolation levels. The reduction by this factor of peak power is realized as a true peak power of 320 watts rather than the 300 watts seen in these tests.

From the I-V curves of Figures 4-14 through 4-17, the power and fill factor is seen to vary significantly between tests. It is interesting to note the continual increase in fill factor and power as fewer cells are parallel connected. The normalized peak power is plotted versus the number of parallel connected cells in Figure 4-18. This shows a strong correlation between parallel strings and reduction of power, with the 6-parallel configuration peak power only 94.9% that of the all series configuration. No satisfactory explanation of this phenomena has been determined at this time.

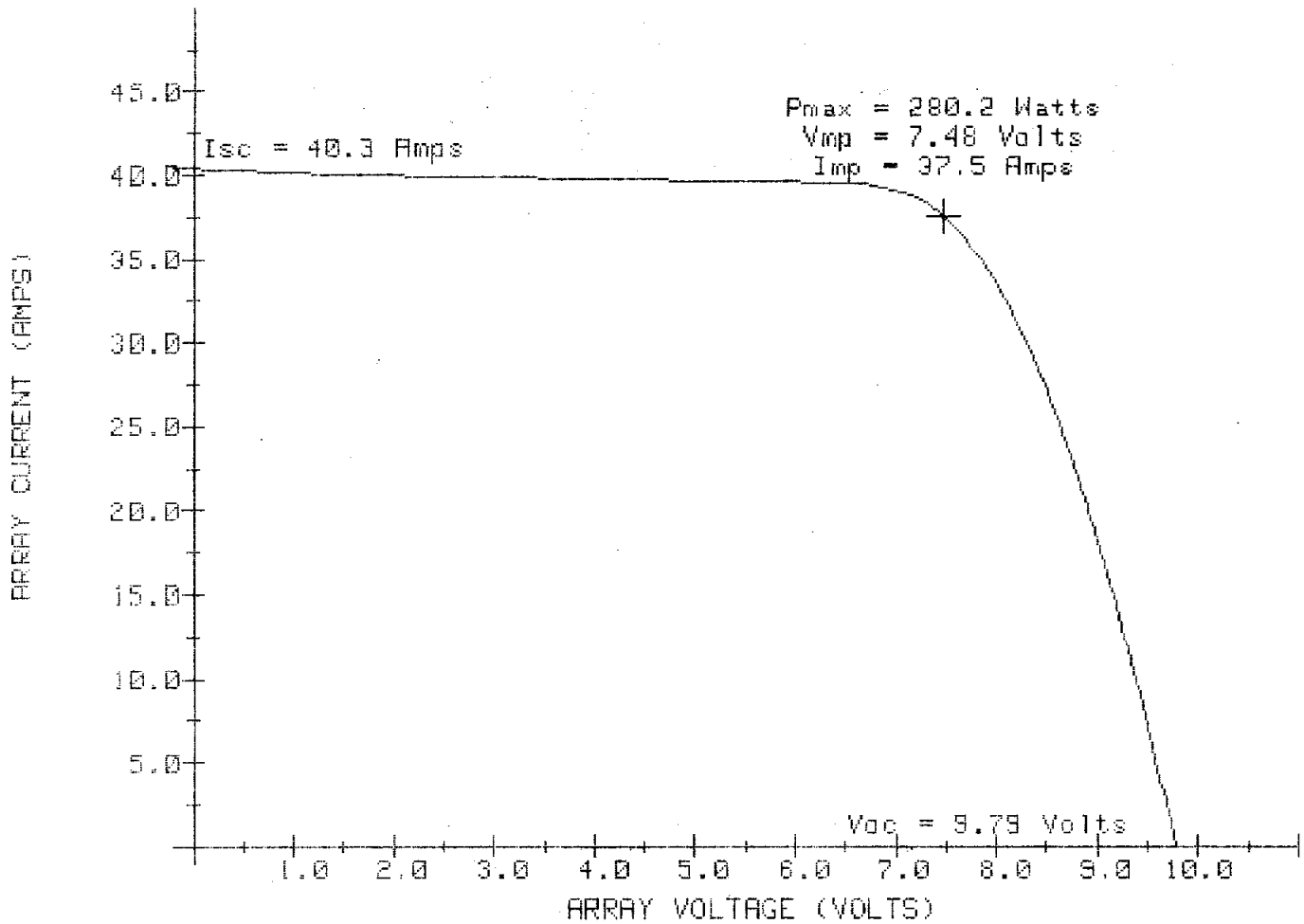

SPECTRO-LAB POLAR MOUNT
MIRROR WASHED
Test run at 10:59:15 Jan 21, 1980

DIRECT NORMAL INSOLATION	=	981	W/SQ M (Start)	987	W/SQ M (End)
TOTAL HORIZONTAL INSOLATION	=	573	W/SQ M (Start)	575	W/SQ M (End)
AMBIENT TEMPERATURE	=	4.1	DEG C		
DEW POINT.....	=	-8.9	DEG C		
WIND SPEED	=	.4	M/SEC (Inst.)	1.1	M/SEC (Ave.)
WIND DIRECTION (CW FROM NORTH)	=	235	DEG (Inst.)	233	DEG (Ave.)
TEST PAD	=	195			
MANUFACTURER'S CODE.....	=	SPL			
TEST ITEM MODEL NUMBER	=	1			
TEST ITEM SERIAL NUMBER	=	1			
TEST ITEM RECEIVAL DATE	=	800810			
TEST ITEM APERTURE.....	=	4.31	SQ M		
TEST CODE	=	1			
ELECTRICAL EFFICIENCY	=	6.6	%		
FILL FACTOR	=	.71			

NO THERMOCOUPLE DATA

Test No. 22

Normalized peak power = 285.6W @ 1000 W/m^2

Figure 4-14

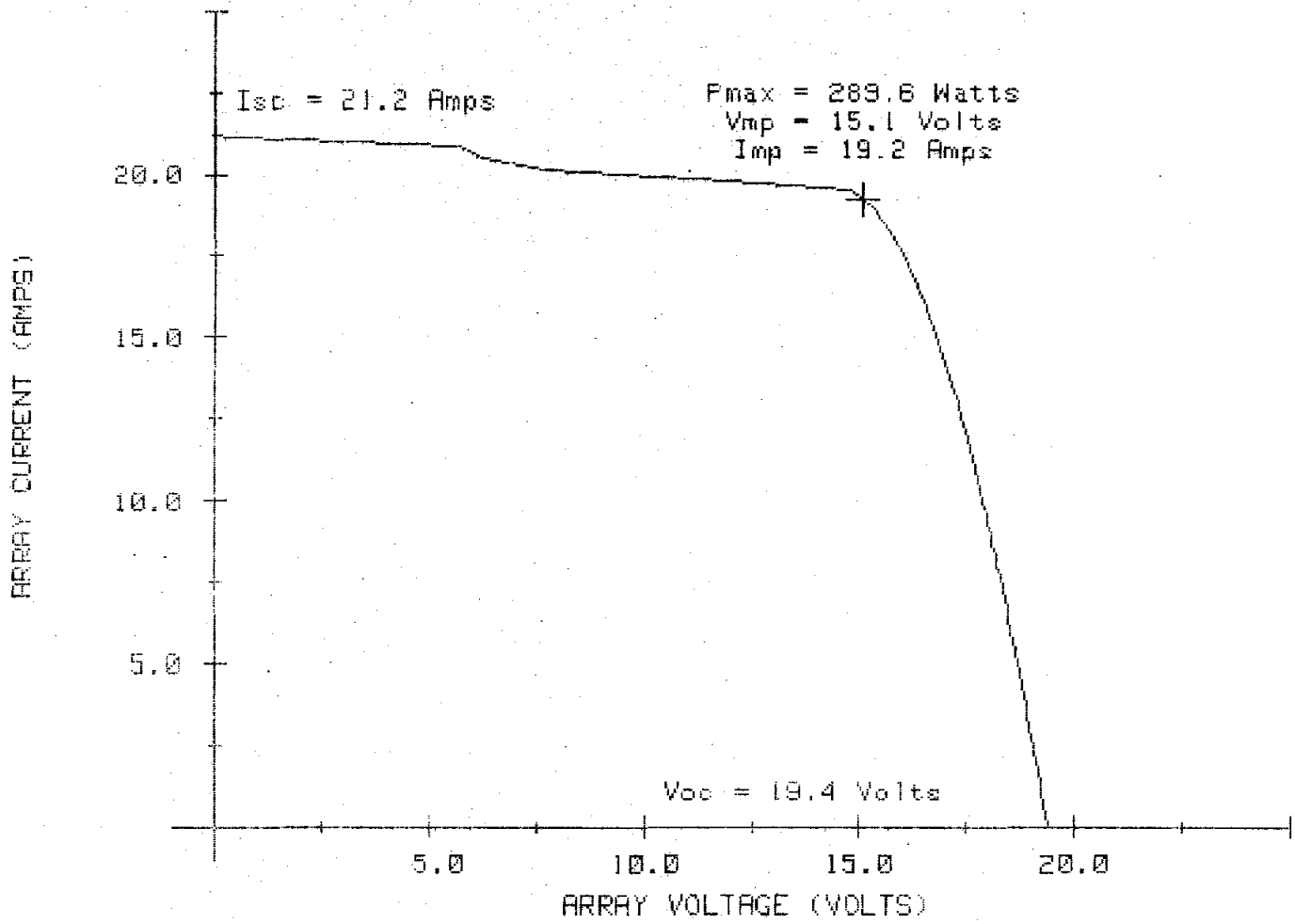

SPECTRO-LAB POLAR MOUNT
MIRROR WASHED,12V CONFIGURATION
Test run at 11:04:24 Jan 21, 1980

DIRECT NORMAL INSOLATION	=	982	W/SQ M (Start)	983	W/SQ M (End)
TOTAL HORIZONTAL INSOLATION	=	579	W/SQ M (Start)	579	W/SQ M (End)
AMBIENT TEMPERATURE	=	3.8	DEG C		
DEW POINT.....	=	-8.8	DEG C		
WIND SPEED	=	2.2	M/SEC (Inst.)	1.8	M/SEC (Ave.)
WIND DIRECTION (CW FROM NORTH)	=	283	DEG (Inst.)	271	DEG (Ave.)
TEST PAD	=	195			
MANUFACTURER'S CODE.....	=	SPL			
TEST ITEM MODEL NUMBER	=	1			
TEST ITEM SERIAL NUMBER	=	1			
TEST ITEM RECEIVAL DATE	=	800810			
TEST ITEM APERTURE.....	=	4.31	SQ M		
TEST CODE	=	1			
ELECTRICAL EFFICIENCY	=	6.8	%		
FILL FACTOR	=	.71			

NO THERMOCOUPLE DATA

Test No. 23

Normalized peak power = 294.9W @ 1000 W/m^2

Figure 4-15

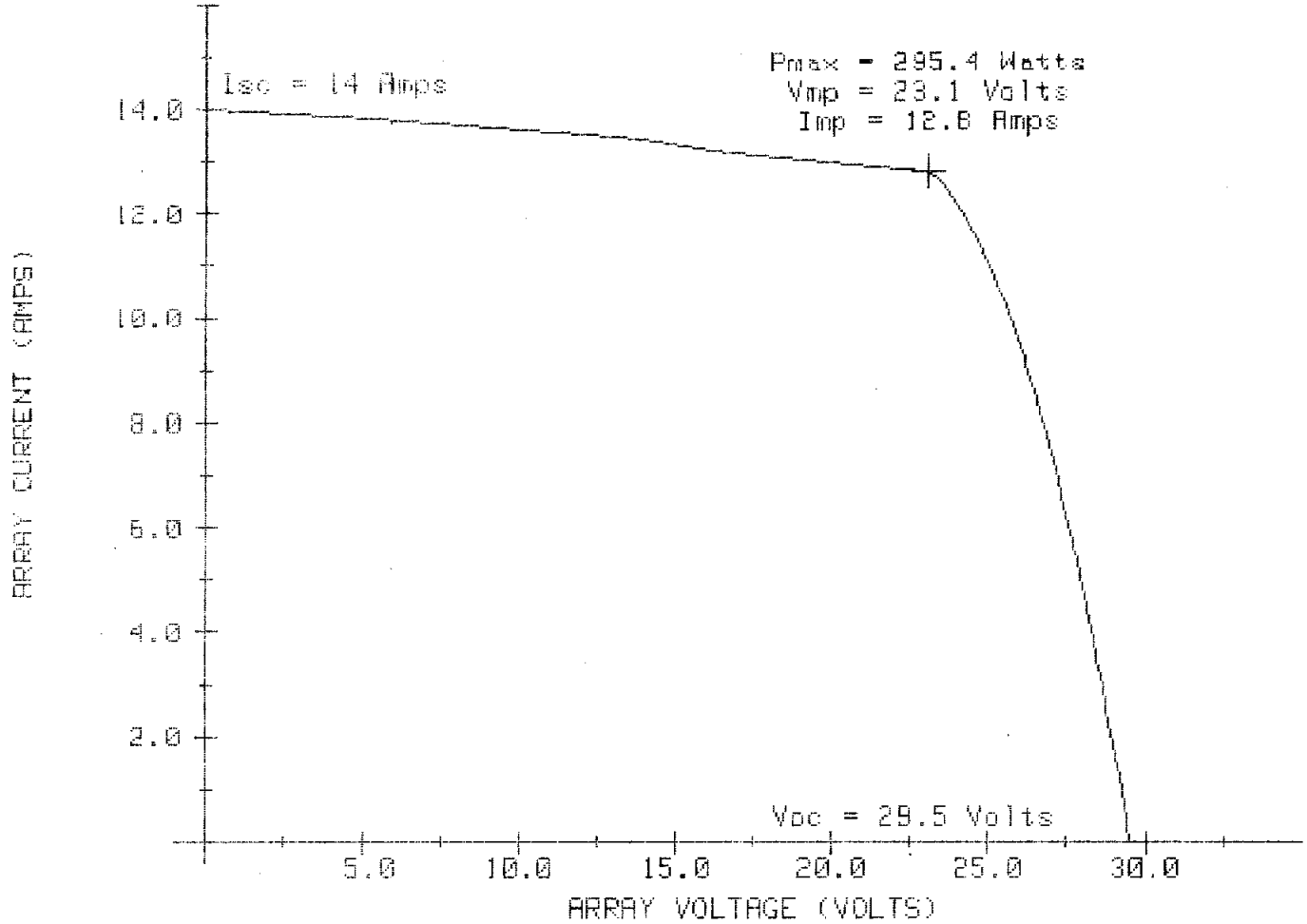

SPECTRO-LAB POLAR MOUNT
MIRROR WASHED, 18V CONFIGURATION
Test run at 11:22:46 Jan 21, 1980

DIRECT NORMAL INSOLATION	=	988	W/SQ M (Start)	990	W/SQ M (End)
TOTAL HORIZONTAL INSOLATION	=	595	W/SQ M (Start)	596	W/SQ M (End)
AMBIENT TEMPERATURE	=	4.3	DEG C		
DEW POINT.....	=	-8.8	DEG C		
WIND SPEED	=	2.9	M/SEC (Inst.)	3.0	M/SEC (Ave.)
WIND DIRECTION (CW FROM NORTH)	=	238	DEG (Inst.)	261	DEG (Ave.)
TEST PAD	=	195			
MANUFACTURER'S CODE.....	=	SPL			
TEST ITEM MODEL NUMBER	=	1			
TEST ITEM SERIAL NUMBER	=	1			
TEST ITEM RECEIVAL DATE	=	800810			
TEST ITEM APERTURE.....	=	4.31	SQ M		
TEST CODE	=	1			
ELECTRICAL EFFICIENCY	=	6.9	%		
FILL FACTOR	=	.71			

NO THERMOCOUPLE DATA

Test No. 24

Normalized peak power = 299W @ 1000 W/m^2

Figure 4-16

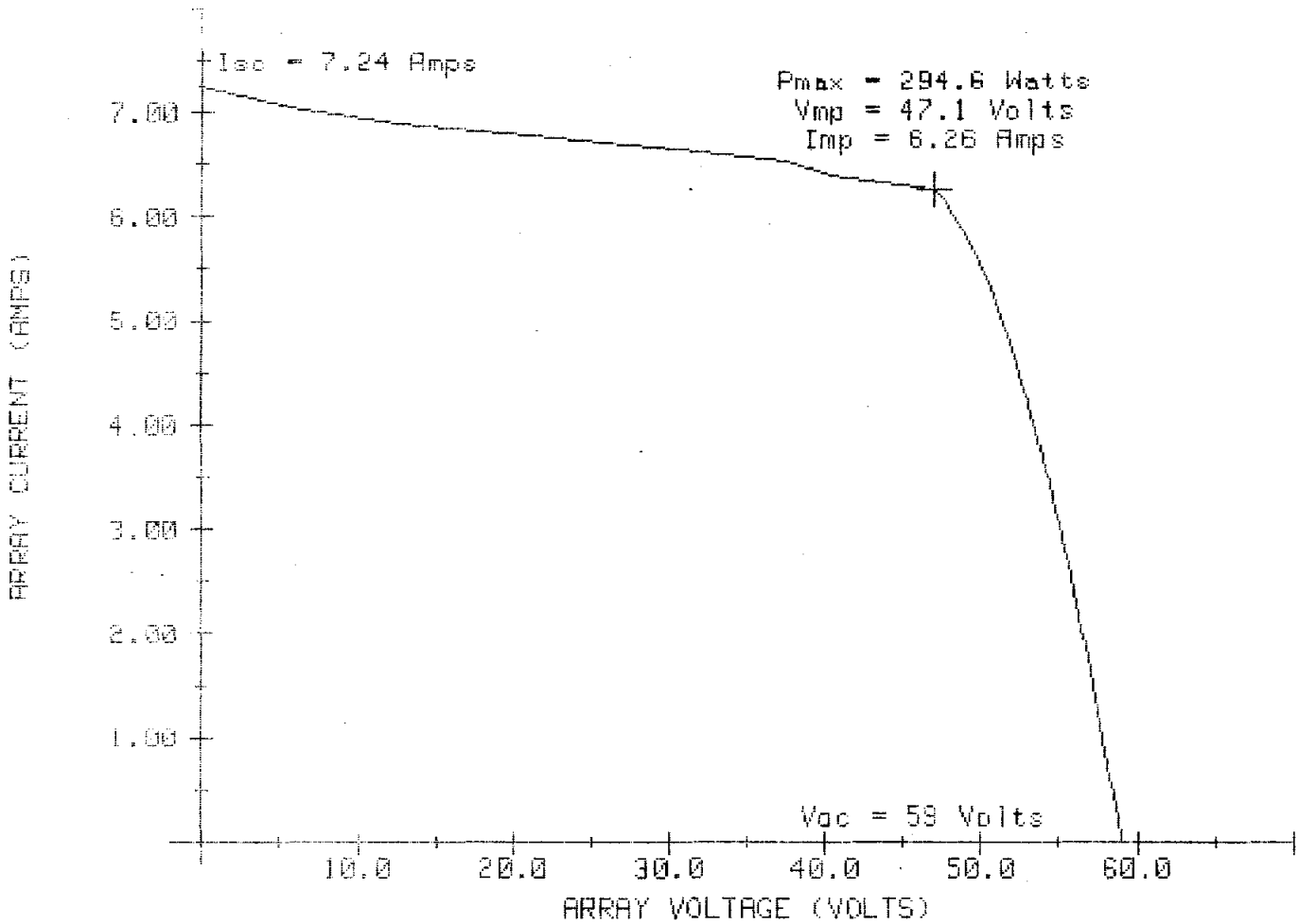

SPECTRO-LAB POLAR MOUNT
MIRROR WASHED,36V CONFIGURATION
Test run at 11:20:39 Jan 21, 1980

DIRECT NORMAL INSOLATION	=	981	W/SQ M (Start)	987	W/SQ M (End)
TOTAL HORIZONTAL INSOLATION	=	588	W/SQ M (Start)	590	W/SQ M (End)
AMBIENT TEMPERATURE	=	4.4	DEG C		
DEW POINT.....	=	-8.8	DEG C		
WIND SPEED	=	1.1	M/SEC (Inst.)	.1	M/SEC (Ave.)
WIND DIRECTION (CW FROM NORTH)	=	297	DEG (Inst.)	310	DEG (Ave.)
TEST PAD	=	195			
MANUFACTURER'S CODE.....	=	SPL			
TEST ITEM MODEL NUMBER	=	1			
TEST ITEM SERIAL NUMBER	=	1			
TEST ITEM RECEIVAL DATE	=	800810			
TEST ITEM APERTURE.....	=	4.31	SQ M		
TEST CODE	=	1			
ELECTRICAL EFFICIENCY	=	6.9	%		
FILL FACTOR	=	.69			

NO THERMOCOUPLE DATA

Test No. 25

Normalized peak power = 300.3W @ 1000 W/m^2

Figure 4-17

Table 4-2

SUMMARY OF OUTDOOR TESTS

Test #	Voltage Mode	Insolation W/m^2	Ambient Temp, ^oC	Wind m/sec	Power Watts	Test Date	Notes
13	6	736	25	1.6	218	5/29/80	Dirty Mirrors
14	36	730	25	1.6	225	5/28/80	" "
15	36	902	26	1.6	280	6/13/80	Clean
16	18	931	23	1.6	273	6/13/80	Clean
17	12	929	23	2.1	253	6/13/80	Clean - Off Track
18	6	904	25	1.6	259	6/13/80	Clean - Off Track
20	6	750	29.3	2.1	204.1	6/19/80	Very Dirty
22	6	981	4.1	.4	280.2	1/15/81	Clean
23	12	982	3.8	2.2	289.6	1/15/81	Clean
24	18	988	4.3	2.9	295.4	1/15/81	Clean
25	24	981	4.4	1.1	294.6	1/15/81	Clean

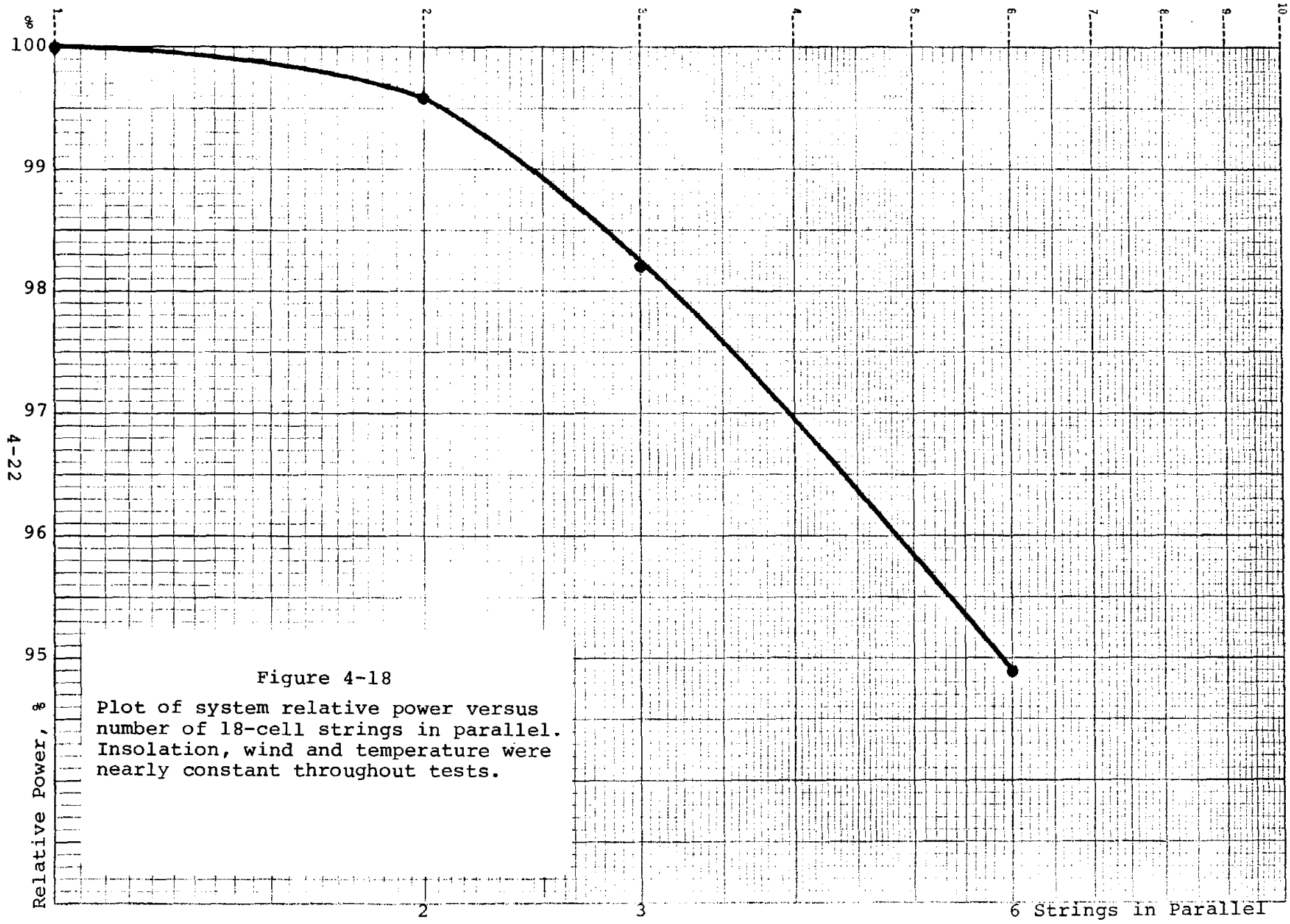

Figure 4-18

Plot of system relative power versus number of 18-cell strings in parallel. Insolation, wind and temperature were nearly constant throughout tests.

4.3.2 Tracker/Optical Performance

To observe the effects of tracking steps on power, the load resistance was set to near the peak power point and variations in current as a function of time were observed. This was done in each of the four voltage modes. Figure 4-19 shows the results of one of these tests. Three of the four tests showed a ΔI_{mp} of 4.4%. One test, for the 12V mode, showed only 1.7% variation, which is much more like what was expected. It is believed that optical problems, such as primary mirror deficiencies and possible polar axis misalignment, are the main causes of the variations in output. This statement is based on visual observations of the line focus not lining up precisely parallel to the cell strings. Some light was spilled during testing. These tests took place on June 13, 1980, with the sun very high in the sky, magnifying any optical/alignment problems.

Figure 4-20 shows the effects of tracking over a longer time period, for 11.6 minutes.

4.3.3 Thermal Effects of Different Absorber Finishes

As mentioned earlier, each of the three absorber/heat sink assemblies has different cooling enhancement techniques. These are:

1. Thin, light-colored anodized finish, with saw cuts (#003, East absorber)
2. Thick, dark-colored anodized finish with saw cuts (#002, West Absorber)
3. Thick, dark-colored anodized finish without saw cuts (#001, not used)

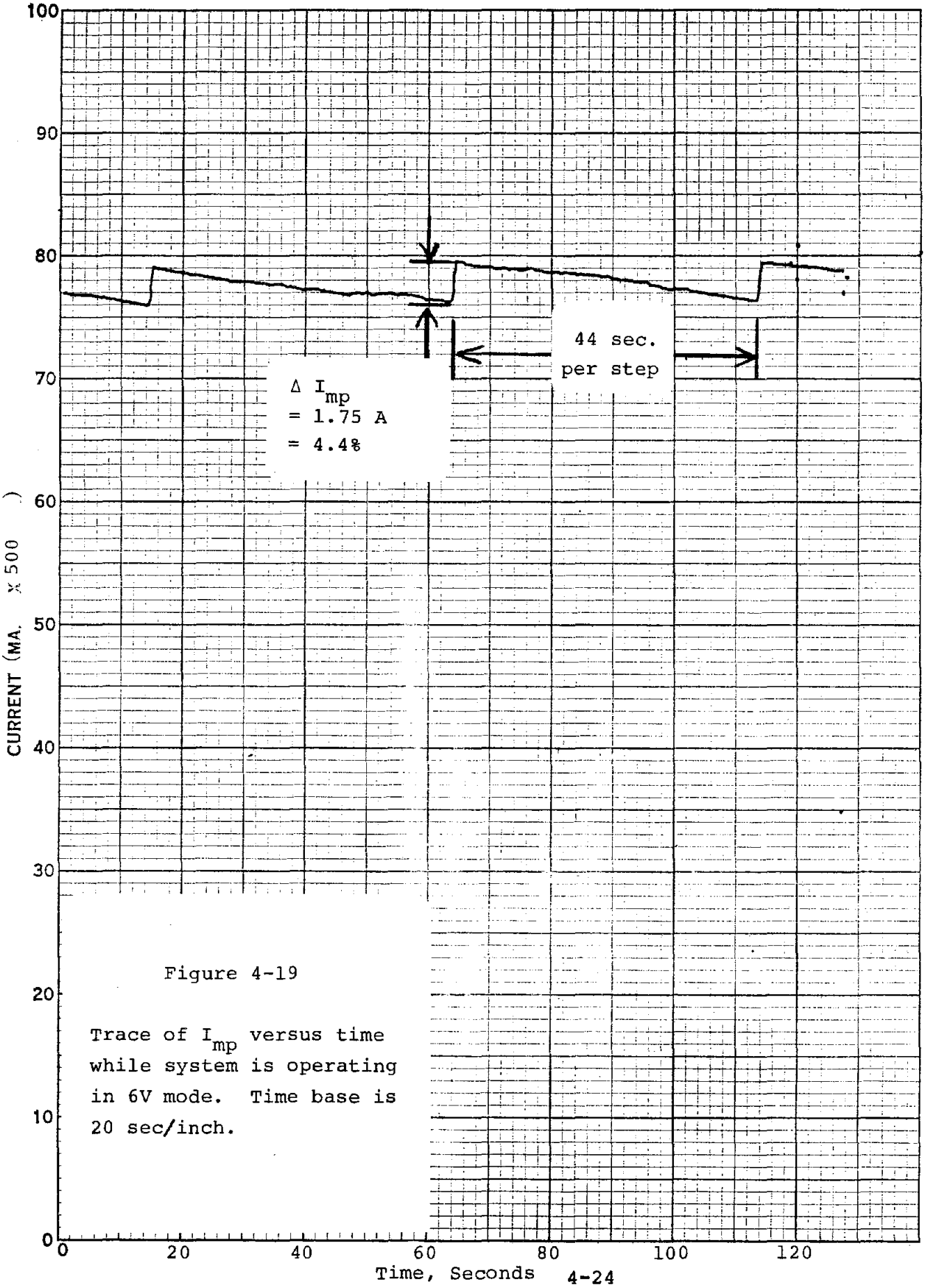

Figure 4-19

Trace of I_{mp} versus time while system is operating in 6V mode. Time base is 20 sec/inch.

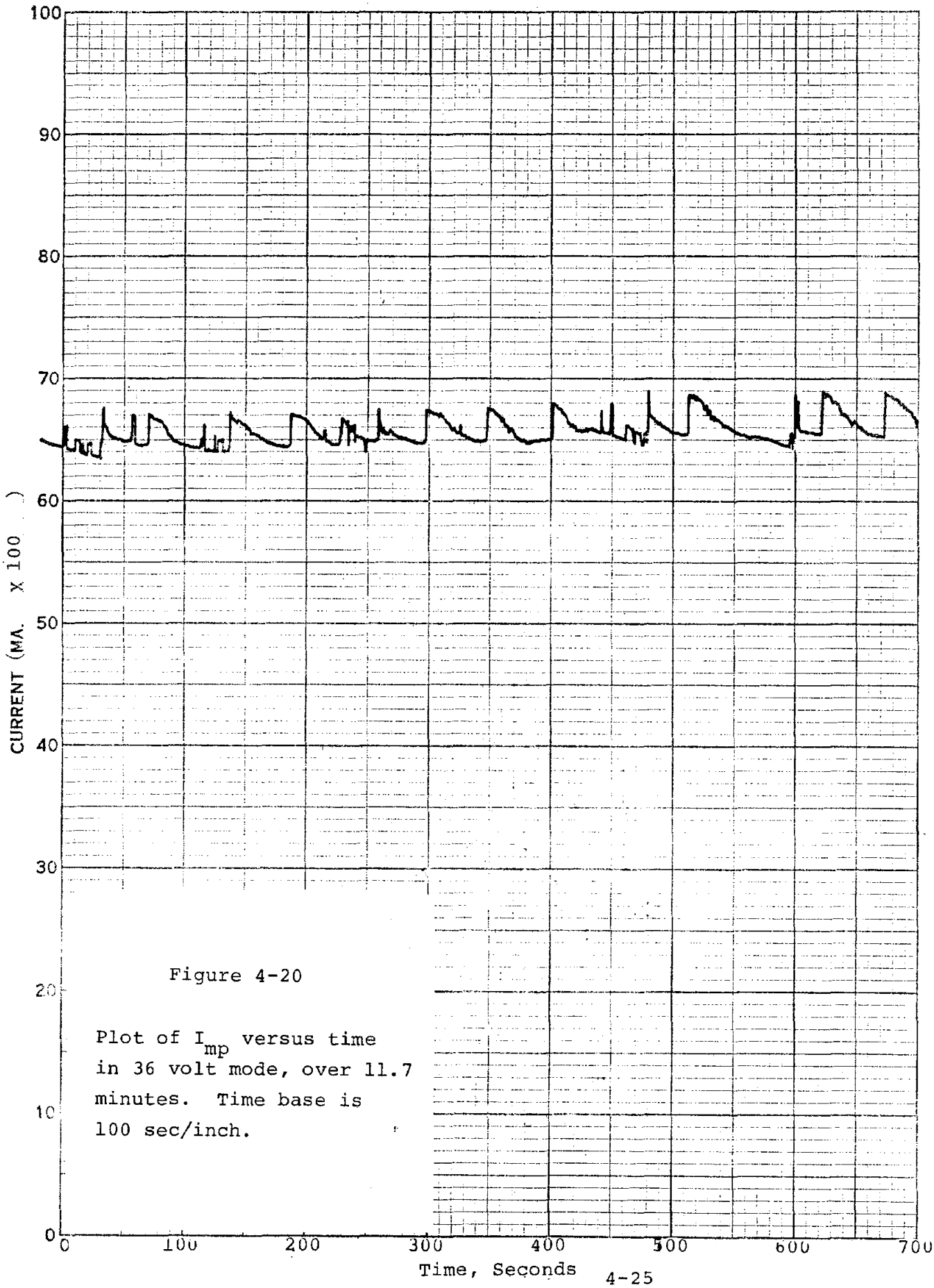

Figure 4-20

Plot of I_{mp} versus time in 36 volt mode, over 11.7 minutes. Time base is 100 sec/inch.

Absorbers #003 and #002 were used during all tests, to determine the effects of the two different types of anodizing. Specifically, the open circuit voltage was observed and monitored to see if one absorber was running hotter than the other.

Table 4-3 summarizes the results of several indoor and outdoor tests, at intensity levels from 1 to 20 suns. The final analysis is that the light colored absorber with the thin anodized coating seems to run cooler outdoors, by $2^{o}C$ at most, as determined by both direct and indirect measurement techniques.

This is most likely caused by the lower absorptivity of the light colored coating, rather than anything else. The $2^{o}C$ ΔT correlates well with calculations of the additional thermal load caused by the dark colored anodizing.

Thus, since the light anodizing is also cheaper, it seems to be better all around.

Table 4-3

OPEN CIRCUIT VOLTAGE TESTS

Test #	Test Conditions	Absorber #003 (Lite w/cuts) V_{oc}	Absorber #002 (Dark w/cuts) V_{oc}	ΔV_{oc}	Apparent Temperature Difference
5 & 9	Indoors, Pulse, AM1, 28°C	30.30	30.10	.20V	0 (measured)
6, 7, 8, 10, 11, 12	Indoors, Pulse, 20 suns, 24°C	34.76	34.76	0	0 (measured)
26	Outdoors, 12.2 suns @ cells	28.28	28.05	.23V	.5°C
22, 25	Outdoors, 15.9 suns @ cells	29.76	29.24	.52V	2.0°C

5.0 CONCLUSIONS

In general, the overall simplicity of the structure and drive of this system is a very large plus factor. Unfortunately, the polar axis configuration tends to be excessively sensitive to alignment errors, which necessitates extreme care during installation. Also, the longer optical path from mirrors to cell strings near the solstices magnify any optical deficiencies and alignment errors. Thus, the original requirements for primary mirror specularity are increased by about 50%, which are now beyond the limits of plastic film reflective surfaces. The cosine attenuation factor at non-equinox times is also a significant problem, with losses most significant at times of both maximum and minimum daily insolation.

Open circuit voltage tests show the less expensive, light-colored anodized heat sink finish to work better than the dark, expensive finish.

Comparisons of system peak power when in the various voltage configurations shows significantly higher power in the high voltage mode. As more cell strings are connected in parallel, power decreases.

Thermal control is still a problem in a passively cooled concentrator system, with the cell-to-substrate interface being extremely critical.

With further development and experimentation, commercially viable photovoltaic concentrator systems can become a reality. Continuing efforts to minimize system deficiencies as they are recognized is the only way to assure success.

6.0 PRODUCTION COST ESTIMATE

6.1 INTRODUCTION

Spectrolab, under contract to Sandia Laboratories, has developed designed and manufactured a 500 watt Photovoltaic Concentrator Solar Power System for commercial applications. Part of the construction contract for this 500 W system calls for an assessment of systems cost based on a 10 MW annual production rate, equivalent to an annual production of 20,000 systems.

In the following, the production cost estimates based on the above assumptions are presented. The costs for the major systems components, these being the tracking structure including electronics, the mirror assembly, and the secondary module assembly, have been determined. In addition, shipping and installation costs were estimated and are presented. All costs are in 1980 dollars using prices as quoted by suppliers and estimating labor requirements based on the experience gained during this production effort and projected improvement in manufacturing techniques wherever possible.

6.2 SYSTEMS COST SUMMARY

The costs as determined for the individual systems components are presented in Table 6-1.

The total installed system cost of $17.77 per peak watt seems rather high as compared to the cost numbers presented today for flat plate installations. However, most flat plate costs are for prices FOB production facility and these do not include the shipping or installation cost, nor do they include the cost of the required array structure hardware. It has further been

Table 6-1

COST SUMMARY FOR PRODUCTION
OF A 500 WATT COMMERCIAL CONCENTRATOR SYSTEM

Component	Cost	
	$ Per Peak Watt	$ Per 500W System
Absorber, 87 Cells 112" Long, 2 Each	7.71	3,855
Mirrors, 168" Long, 10 kW Mirror Quote of 1980, Adjusted to 168" Length, 2 Each	4.74	2,370
Material Tracking Structure, Electronics & Torque Tube	2.00	999
Assembly of Tracking Structure, Electronics & Torque Tube	.72	360
Foundation and Civil Works	1.34	670
Installation and Checkout	1.26	630
TOTAL	17.77	8,884

determined that the actual energy collection potential for one axis polar mount tracking installations is 2,902 kWh/year per m^2 as compared to 2,518 kWh/year per m^2 for flat plate systems installed at the local latitude, based on Albuquerque 1962 weather data[1]. This would then represent a 15.25% increase in energy production based on an equal peak power capacity for a concentrator system. For a given load, a 13.23% reduction will result when comparing cost per peak watt of a concentrator system utilizing one axis tracking versus a flat plate system installed at the local latitude.

6.3 DETAILED COST BREAKDOWN FOR EACH SYSTEM COMPONENT

6.3.1 Secondary Absorber Module

A detailed cost analysis was required to assess the production cost for the secondary absorber, assuming a 10 MW annual production rate. All cost numbers determined up to this time were established for rather limited production quantities. This resulted in a production approach utilizing highly labor intensive processes, limiting the cost reduction potential when going to higher production volumes.

Assuming a 10 MW annual production capacity corresponding to a 40,000 unit per year output rate, a substantial investment for obtaining a highly mechanized process line can be justified. For the purpose of this costing task, a process line was conceptually designed utilizing automated process and material handling

---

(1) Terrestrial Photovoltaic Power Systems with Sunlight Concentration progress report January 1975 to June 1975, Section 3.1.1, Table 3.1.

equipment wherever possible. The production facility configured for this commercialization system was assumed to be equivalent to the one designed for the 10 kW system. It was assumed that minor modifications would be sufficient to accommodate the slightly different absorber size. This annual production capability can be achieved in a manufacturing facility having 18 process stations, all located in one manufacturing plant. A block schematic of this manufacturing facility is depicted in Figure 6-1.

The production costs of $7.71 per peak watt for secondary absorbers manufactured in this facility were determined utilizing JPL's SAMIS computer code. Standard SAMIS default values were entered for the various cost escalation rates, the capital cost relations, taxing structure and the internal company financial parameters. A 10 year life expectancy was assumed for all the major process capital equipment and a zero end of life salvage value was utilized with few exceptions. The equipment costs were based on actual vendor quotes wherever possible, permitting a realistic assessment of the expected capital expenditures. Total required capital expenditures for a plant necessary for start-up to obtain an annual production rate of 40,000 absorber modules was calculated to be in excess of $12,000,000 in 1975 dollars. The various capital expenditures required are presented in Table 6-2.

Incidentally, the major cost contributing item for this secondary absorber is still represented by the solar cells. The cost for the assembled cell string represents 68% of the cost for the secondary absorber. However, a substantial investment as well as a determined development effort would be required to reduce the cost for the cells by having them produced in cell process lines currently under investigation at Spectrolab. This line is being

Figure 6-1

MANUFACTURING AND PROCESS SEQUENCE, SECONDARY ABSORBER

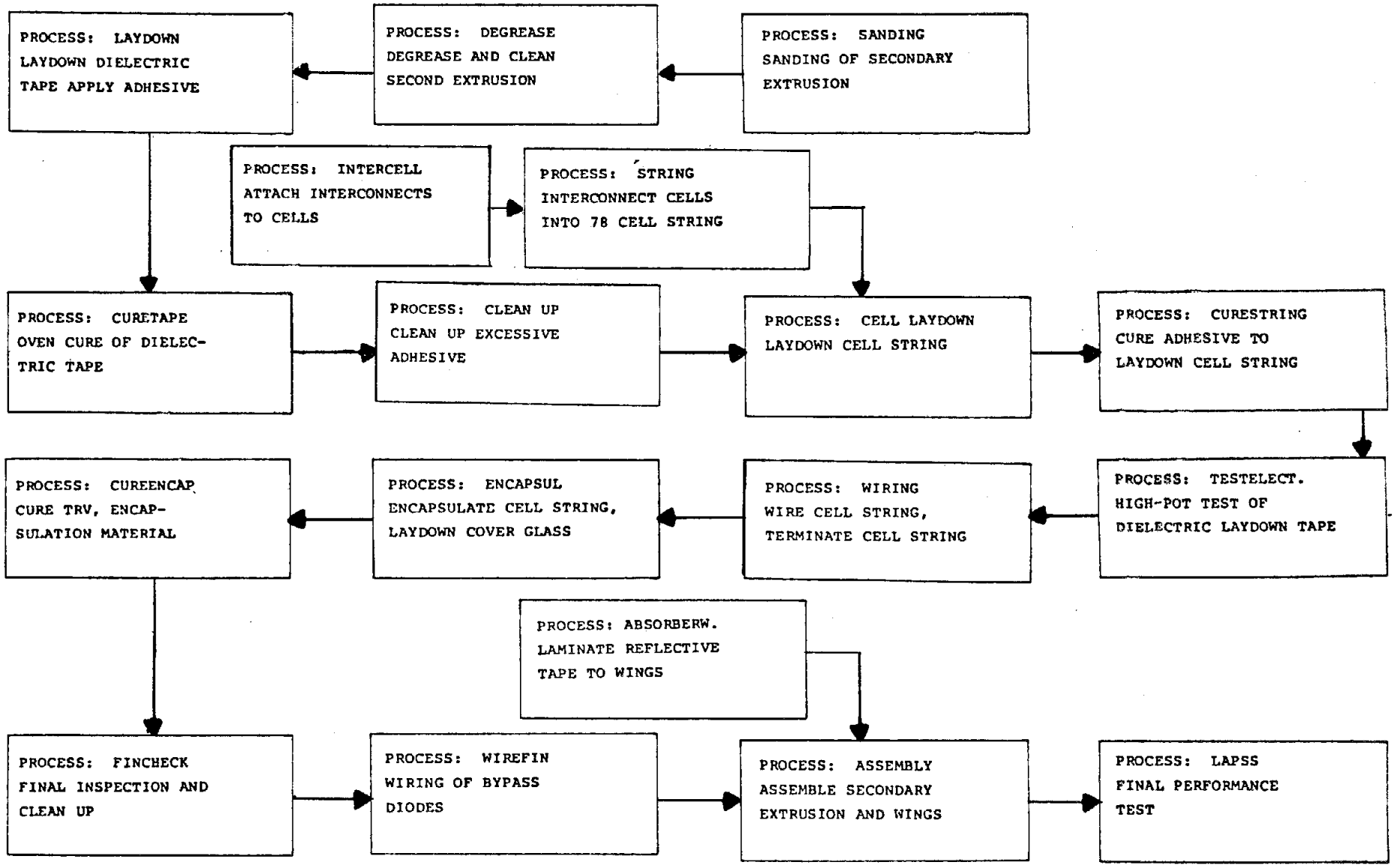

Table 6-2

CAPITAL REQUIRED TO START UP PRODUCTION OF 40,000 ABSORBER MODULES PER YEAR IN AN AUTOMATED PRODUCTION FACILITY

Expenditures	Cost (In 1975 Dollars)
Facilities	$ 1,701,643
Equipment	2,240,741
Working Capital	8,420,295
Land	25,531
Total	$12,388,207

NOTE: These values are best estimates.

investigated for development to produce standard aerospace type cells having evaporated contacts. In addition, studies are under way for cell process lines to be utilized for producing commercial type cells to be utilized in standard modules for terrestrial applications.

6.3.2 Primary Mirror Assembly

The primary mirror module for the Spectrolab 10 kW concentrator system uses a Hexcel honeycomb assembly. The cost inputs for this system component were obtained from Hexcel in a quote dated March 24, 1980. This cost was modified to reflect the larger mirrors required for the one axis solar tracking configuration.

The quoted price of $4.74 per peak watt reflects the current production cost for these assemblies utilizing Hexcel's present technology. However, it was indicated earlier that these concentrator modules could be built at a price of 85.9¢ per peak watt if a commitment for a highly mechanized production line was made[(2)]. A careful re-evaluation of the present design configuration could bring about some reductions in cost by changing parts and in some cases materials and/or assembly operations, even if no major investments toward a mechanized manufacturing plant were to be made.

6.3.3 Tracking Structure, Electronics and System Installation

The concentrator tracking structure consists of four major system components. These are an open truss support structure, a torque tube assembly linking the drive gear box to the mirror and absorber units, an electrical drive unit, and an electronic tracking control

---

(2) Cost Estimate at $3.00/lb in system quantities of 1000 per year from Hexcel-George Branch.

system. The structure rests on a concrete foundation. A summary of all costs for this 500 watt system, including labor costs for assembly and installation and checkout, were given in Table 6-1. The costs shown in Table 6-1 are based on a detailed cost breakdown for all components. This detailed cost breakdown for the 500 watt concentrator system, assuming a 10 MW per year production rate, is presented in Table 6-3. Cost of all the hardware is presented and labor for assembly is given where necessary. The hardware costs are based on prices given by Sandia for the structural materials during the PRDA 35 proposal efforts[3]. The cost for the drive unit and the tracking electronics are best engineering estimates by Spectrolab.

Installation and checkout costs are presented. For the purpose of this costing effort, it was assumed that all major structural components would be preassembled in the manufacturing facility. This permits reduced utilization of very expensive field labor at the expense of somewhat higher transportation costs. However, structure assembly on a manufacturing line is more efficient and should offset the somewhat higher shipping cost due to a lower specific volume. Based on this assumption, shipping and installation of preassembled structures seem appropriate.

---

(3) Material cost summary amendment to PRDA 35 proposals

Table 6-3

DETAILED PRODUCTION COST ESTIMATE
500 WATT CONCENTRATOR

SOLAR TRACKING STRUCTURE			
Structural Steel Trusses	550 lbs.	$.38/lb.	$ 209
Gear Box and Motor			550
Bearings	1 ea.		20
Shaft Coupling	1 ea.		20
Misc. Hardware	10 lbs.	$.50/lb.	5
Cable & Wiring	20' #6 AWG	$.50/ft.	10
Tracker Electronics			80
Structural Aluminum	100 lbs.	$1.05 ea.	105
Total Structural Material			$ 999
ASSEMBLY COST ESTIMATE			
Structure			
6 Manhours, $30 per			$ 180
Torque Tube and Mirrors			
6 manhours, $30 per			180
Total Cost			$ 360
COST FOR FOUNDATION AND INSTALLATION			
Foundation, Civil Works			
10 Manhours per system @ $30/Manhour Leveling, preparing cast, pouring of concrete			$ 300
4 cu yrd of ready mix concrete		@ $90 each	360
Attachment hardware			10
Total Foundation Cost			$ 670

Table 6-3 (Cont'd)

INSTALLATION AND CHECKOUT	
Erection of preassembled structure 4 manhours @ $30 per	$ 120
Installation of mirror assembly 3 manhours @ $30 per	90
Installation of gear motor tracking electronics 3 manhours @ $30 per	90
Wiring and set-up of sensor 2 manhours @ $30 per	60
Checkout and testing 4 manhours @ $30 per	120
Equipment Rental (Cherry Picker)	150
Total Cost	$ 630

DISTRIBUTION LIST:

Acurex Corporation (3)
Attn: George Sutton
Bob Spencer
John Kull
485 Clyde Avenue
Mountain View, CA 94042

Aerospace Corporation
Attn: Ed Simburger
2350 El Segundo Blvd.
El Segundo, CA 90266

Alliance Tool Corp.
Fresnel Optics Division
Attn: Helmut Walter
1300 Mt. Read Blvd.
Rochester, NY 14606

Applied Solar Energy Corp. (3)
Attn: Steve Olah
Frank Ho
Ken Ling
15251 E. Don Julian Road
City of Industry, CA 91746

ARCO Power Systems
Attn: Floyd Blake
Suite 307
7061 S. University Blvd.
Littleton, CO 80122

Arizona State University (2)
Attn: Charles Backus
Robert Sanderson
College of Engineering
Tempe, AZ 85281

Ray Bahm & Associates
Attn: Ray Bahm
2513 Kimberly Court NW
Albuquerque, NM 87130

Battelle
Attn: Don Carmichael
505 King Avenue
Columbus, OH 43201

The BDM Corporation (3)
Attn: Tim Lambarski
Wayne Kauffman
Bill Schwinkendorf
1801 Randolph Road SE
Albuquerque, NM 87111

Boeing Engineering & Const. Co.
Attn: Roger Gillette
P. O. Box 3707
Seattle, WA 98124

Burns & Roe, Inc. (2)
Attn: G. A. Fontana
800 Kinderkamack Road
Oradell, NJ 07649

Chevron Research (2)
Attn: John Cape
R. Creek
576 Standard Avenue
Richmond, CA 94802

Cyro Industries
697 Route 46
Clifton, NJ 07015

U. S. Dept. of Energy (2)
ALO
Attn: James Morley
Ethan Walker
P. O. Box 5400
Albuquerque, NM 87115

U. S. Dept. of Energy (8)
Div. of PV Energy Technologies
Attn: R. Annan
M. B. Prince
L. Herwig (5)
A. Scolaro
1000 Independence Ave. SW
Washington, DC 20585

E-Systems (2)
Attn: Mark O'Neill
A. J. McDanal
P. O. Box 226118
Dallas, TX 75266

General Electric Co.
Attn: Ron Hodge
P. O. Box 527
King of Prussia, PA 19406

International Rectifier
Attn: Harold Weinstein
235 Kansas Street
El Segundo, CA 91214

Intersol Power Corporation
Attn: John Sanders
7400 W. Radcliff Avenue
Littleton, CO 80123

Jet Propulsion Lab (3)
Attn: K. Shimada
R. Ferber
Solar Data Center
4800 Oak Grove Drive
Pasadena, CA 91109

Martin Marietta (4)
Attn: S. Broadbent
R. Hein
D. Hughes
J. Baumann
P. O. Box 179
Denver, CO 80201

Microwave Associates
Attn: Jonathon Chapple-Sokol
South Avenue MS-116
Burlington, MA 01803

McGraw Hill
607 Boylston St.
Boston, MA 02116

Wally Meinel
265 South Park
Tucson, AZ 85719

3M
Attn: Sanford Cobb
Industrial Optics
235 2D15
3M Center
St. Paul, MN 55144

Motorola
Attn: Keith Kingston
GED
8201 E. McDowell
Scottsdale, AZ 85252

NASA, HQ
Attn: John Loria
Code RET-1
Washington, DC 20546

New Shelter Home Magazine
9317 Shoshone
Albuquerque, NM 87111

Oak Ridge National Lab
Attn: Steve Kaplan
P. O. Box X
Oak Ridge, TN 37830

Oklahoma University
571 South University Blvd.
Norman, OK

Photowatt (2)
Attn: William Taylor
Mike Keeling
2414 W. 14th Street
Tempe, AZ 85281

Power Hybrids
Attn: Jeff Meyer
1742 Crenshaw Blvd.
Torrance, CA 90501

PRC
Attn: E. Stirewalt
5201 Leesburg Pike
Suite 400
Falls Church, VA 22070

Purdue University (2)
Attn: Richard Schwartz
Mark Lundstrom
Electrical Engineering Dept.
West Lafayette, IN 47907

Quantum Specialties
Attn: James E. Molle
163 Verde Circle
Rohnert Park, CA 94928

Research Triangle Institute
Attn: Mayrant Simons
Box 12194
Research Triangle Park, NC 27709

SERI (3)
Attn: Gene Blakeslee
Lee Cole
John Benner
1617 Cole Blvd.
Golden, CO 80401

SERI, Library (2)
1536 Cole Blvd., Bldg. #4
Golden, CO 80401

Southern Cal Edison
Attn: Spencer Carlisle
2244 Walnut Grove Ave.
Rosemead, CA 91770

Spectrolab (4)
Attn: Kenneth Ronney
12500 Gladstone Avenue
Sylmar, CA 91342

Spire (3)
Attn: S. Tobin
M. Nowlan
R. Little
Patriots Park
Bedford, MA 01730

Star Light Energy
Attn: J. Furber
1717 18th Street NW
Washington, DC 20009

Strategies Unlimited
201 San Antonio Circle
Suite 205
Mountain View, CA 94040

Solar Works
Attn: Paul Wilkins
Route 2, Box 274
Santa Fe, NM 87501

Thermo Electron
Attn: Ron Scharlack
45 First Avenue
Waltham, MA 02154

UNM/NMERI
Attn: G. Leigh
Campus Box 25
Albuquerque, NM 87131

Varian & Associates (2)
Attn: Peter Borden
N. Kaminar
611 Hansen Way K-219
Palo Alto, CA 94303

University of Wisconsin
Attn: Prof. J. D. Wiley
Dept. of Electrical Engineering
Madison, WI 53706

Wright Patterson AFB
Attn: Jack Geis
AFWAL/POOC
Wright Patterson AFB, OH

Wyle Labs (2)
Attn: Dave Christenson
George Meares
7800 Governors Drive West
Huntsville, AL 35807

1133 R. Chaffin
1133 J. Wiczer
1811 R. Assink
1822 J. Sweet
Attn: M. Moss
R. Pettit
1823 M. Chamberlain
1845 R. Eagan
2142 B. Rose
2146 M. Garner
2146 B. Hanson
2146 B. Nasby
2146 J. Rodriguez
2146 H. Weaver
9700 E. Beckner
9720 D. Schueler
9721 J. Banas
9721 H. Gerwin
9723 E. Burgess
9724 E. Boes
9724 D. Arvizu
9724 L. Beavis
9724 C. Chiang
9724 M. Edenburn
9724 D. King
9724 A. Maish
9724 M. Rios
9724 C. Stillwell
3141 L. J. Erickson (5)
3151 W. L. Garner (3)
3154-3 C. H. Dalin (25)
For DOE/TIC (Unlimited Release)
8214 M. A. Pound