# CONTRACTOR REPORT

SAND82—7147
Unlimited Release
UC—63a

# Design of a Photovoltaic Central Power Station Flat-Plate Array

Martin Marietta Corporation
Denver Aerospace
Solar Energy Systems
P.O. Box 179
Denver, CO 80201

Prepared by Sandia National Laboratories Albuquerque, New Mexico 87185 and Livermore, California 94550 for the United States Department of Energy under Contract DE-AC04-76DP00789

Printed February 1984

***When printing a copy of any digitized SAND Report, you are required to update the markings to current standards.***

Issued by Sandia National Laboratories, operated for the United States Department of Energy by Sandia Corporation.

**NOTICE:** This report was prepared as an account of work sponsored by an agency of the United States Government. Neither the United States Government nor any agency thereof, nor any of their employees, nor any of their contractors, subcontractors, or their employees, makes any warranty, express or implied, or assumes any legal liability or responsibility for the accuracy, completeness, or usefulness of any information, apparatus, product, or process disclosed, or represents that its use would not infringe privately owned rights. Reference herein to any specific commercial product, process, or service by trade name, trademark, manufacturer, or otherwise, does not necessarily constitute or imply its endorsement, recommendation, or favoring by the United States Government, any agency thereof or any of their contractors or subcontractors. The views and opinions expressed herein do not necessarily state or reflect those of the United States Government, any agency thereof or any of their contractors or subcontractors.

Printed in the United States of America
Available from
National Technical Information Service
U.S. Department of Commerce
5285 Port Royal Road
Springfield, VA 22161

NTIS price codes
Printed copy: A11
Microfiche copy: A01

SAND82–7147
Unlimited Release
Printed February 1984

Distribution
Category UC–63a

# Design of a Photovoltaic Central Power Station

# Flat-Plate Array

Martin Marietta Corporation
Denver Aerospace
Solar Energy Stystems
P.O. Box 179
Denver, CO 80201

Sandia Contract No. 62–9142

## Abstract

A design for a photovoltaic central power station using fixed flat-panel arrays has been developed. The 100 MW plant is assumed to be located adjacent to the Saguaro Power Station of Arizona Public Service. The design assumes high-efficiency photovoltaic modules using dendritic web cells. The modules are arranged in 5 MW subfields, each with its own power conditioning unit. The photovoltaic output is connected to the existing 115 kV utility switchyard. The site specific design allows detailed cost estimates for engineering, site preparation, and installation. Collector and power conditioning costs have been treated parametrically.

## FOREWORD

This report presents the design and projected cost of a flat plate Photovoltaic Central Power Station (CPS). The study was undertaken by Martin Marietta Denver Aerospace, Solar Energy Systems Product Area. Arizona Public Service and Stearns-Roger Services, Ltd. served as subcontractors.

ACKNOWLEDGMENTS

The project personnel who participated and contributed in the study were:

Sandia Laboratories

Dr. Gary Jones, Technical Monitor

Martin Marietta Solar Energy Systems

Matt S. Imamura, PV Array and System Engineering
Dave Hughes, PV Array and System Engineering
Lee Marshall, PV Array and Systems Engineering
Armando Solorzano, Instrumentation, Control and Display
Dr. Patrick C. Hardee, Instrumentation, Control and Display
Jerry Stephenson, Power Conditioning
Khaled Sharmit, Array Electrical Design
Bruce Heller, Financial and Cost Analysis

Arizona Public Service
Eric R. Weber, Program Manager
Thomas C. Lepley, Project Manager

Stearns-Roger Engineering Corporation
William B. Lang, Program Manager
L. J. Dubberly, Project Engineer
Don Parker, Civil and Mechanical Engineering
Jim Walton, Electrical Engineering
Jerry Harris, Electrical Engineering
Jack Brock, Cost Analysis

In addition, thanks are extended to Chip Rose of the Westinghouse Advanced Energy Systems Division for flat plate module information; Howard Branz of MIT/LL for an array sizing methodology; John Oster of Burt, Hill, Kosar, Rittlemann Associates for array installation scenarios; H. Andy Franklin of the Bechtel Group, Inc. for array mounting structure designs; and Joe King of UTC, Power Systems Division for advanced inverter capabilities.

Design of a Photovoltaic
Central Power Station

Table of Contents | Page


I. Introduction . . . . . 1
  A. Scope and Objectives . . . . . 1
  B. Design Guidelines/Ground Rules . . . . . 1
  C. Design Summary . . . . . 3
  D. Report Format and Acronyms . . . . . 5

II. Plant Features and Design Overview . . . . . 7
  A. Photovoltaic Power System (PVPS) . . . . . 9
    1. Photovoltaic Array . . . . . 13
    2. Mounting Structure . . . . . 19
    3. Power and Signal Distribution . . . . . 22
    4. Power Conditioning Unit (PCU) . . . . . 24
    5. Transformers/Switchgear . . . . . 27
    6. PVPS Grounding/Lightning Protection . . . . . 27
  B. ac Electrical System (acES) . . . . . 30
    1. System Configuration . . . . . 30
    2. Cabling . . . . . 33
    3. Switchgear . . . . . 34
    4. Equipment Installation . . . . . 34
  C. Instrumentation, Control and Display System (ICADS) . . . . . 34
    1. Equipment Based on RS-232C Interface . . . . . 38
    2. PCU Control Interface . . . . . 38
    3. acES Control and Instrumentation Interface . . . . . 39
    4. Weather Instrumentation . . . . . 40
    5. Central Computer Equipment . . . . . 41
    6. Software . . . . . 41
  D. Plant Facilities and Services (PFAS) . . . . . 43
    1. Services and Utilities . . . . . 43
    2. Security and Access . . . . . 49
    3. Structures and Enclosures . . . . . 50

III. Design Studies and Trade-off Analyses . . . . . 52
  A. Site Selection . . . . . 52
  B. Photovoltaic Array . . . . . 54
  C. Automated Array Installation . . . . . 64
  D. Power Conditioning Unit Design . . . . . 65
  E. Field Cabling/Energy Losses . . . . . 65
  F. Intermediate High Voltage Bus . . . . . 66

Table of Contents (cont) Page

Appendixes

A. Plant Construction Cost Estimate . . . . . A-1
B. System Specification . . . . . B-1
C. Subsystem and Component Specifications . . . . . C-1
D. PV CPS Drawings . . . . . D-1
E. Master PV CPS Equipment List . . . . . E-1
F. Subfield Performance Simulations . . . . . F-1

## List of Figures


| | | Page |
|---|---|---|
| IC-1 | System Block Diagram | 4 |
| II-A | System Block Diagram - PVPS | 9 |
| IIA-1 | PCU Output Characteristics | 17 |
| IIA-2 | Subfield Power Flow Diagram | 18 |
| IIA-3 | Source Circuit Schematic | 19 |
| IIA-4 | Flat Plate Subfield Layout | 21 |
| IIA-5 | Flat Plate Panel Installation | 23 |
| IIA-6 | Inverter Efficiency Profile | 26 |
| IIA-7 | System Block Diagram - acES | 29 |
| IID-1 | System Block Diagram - PFAS | 43 |
| IIIB-1 | Cross Sectional View of Flat Plate Module | 57 |


## List of Tables


| | | Page |
|---|---|---|
| IIA-1 | Photovoltaic Module Characteristics | 13 |
| IIA-2 | 5 MWe Subfield Characteristics | 18 |
| IIA-3 | dc Cable Losses at Nominal Conditions | 24 |
| IIB-1 | ac Collection System Power Loss | 33 |
| IIC-1 | List of Measured and Calculated Data | 36 |
| IID-1 | Typical Well Analysis | 47 |
| IID-2 | Array Washing Concept Assumptions | 48 |
| IIIB-1 | Intermodule Cable Tradeoff | 57 |
| IIIE-1 | ac Collection System Power Loss | 66 |
| IIIF-1 | IHV Level Trade Study Results | 67 |

# I. INTRODUCTION

## A. Scope and Objectives

This document discusses the detailed design of a 100 MWe photovoltaic central power station (PV CPS) which uses flat panel PV arrays. This reference design formed the basis for a detailed plant construction cost estimate. The reference design and cost estimate were conducted at a specific utility power plant site, the Saguaro Power Plant owned and operated by Arizona Public Service (APS) Company. In a parallel effort, a similar PVCPS was designed using concentrating collectors. A plant capacity of 100 MWe was recommended by APS. This size was recommended for the following reasons:

1) A CPS rated at 100 MWe ac output would represent approximately 2.2% of APS's peak generating capacity in 1986 and 2% in 1990.

2) APS feels that 2% or more of the APS total output power capacity represents a significant amount of power which can be "felt" on the utilities high voltage transmission network.

The objectives of this study were to develop central station reference design data that will enable future designers to evaluate potential system, subsystem, component and interface design options. The extent of this effort was sufficient to allow detailing of all contributions to the plant cost estimate (See Appendix A); specifications of power producing, distributing and conditioning equipment (See Appendices B and C); structural designs, electrical schematics and field layouts (See Appendix D); a complete breakdown of plant equipment (See Appendis E); and computer simulation of annual plant performance (See Appendis F). Attention was given to design of utility interface hardware and integration to ensure utility acceptance. Wherever possible, existing utility power plant design and engineering practices were used.

## B. Design Guidelines/Ground Rules

The following set of design ground rules was established with the technical monitor at Sandia Laboratories:

- Make maximum practical use of the results from Bechtel's subsystem tradeoff studies.[1] Therefore after a careful review of Bechtel's work and numberous technical interchanges with APS and others in the photovoltaic systems area, the following criteria were established as a baseline from which to work:

  5MW array/inverter module subfield
  ± 1,000 V dc array bus voltage
  Flat plate array spacing of 2.5 times panel slant height
  34.5 kV intermediate high voltage (IHV) ac bus

1 Stolte, W., Bechtel Group, Inc., "Subsystem Design Optimization and Trade Off Study", March 1982.

- Use existing utility (i.e., APS) power plant engineering standards and practices, particularly for ac electrical system design.

- Use photovoltaic devices, power conditioning equipment and instrumentation and control equipment and strategies foreseen to be commercially available by 1985-1986.

Plant performance simulations and array/inverter sizing calculations assumed an insolation and meteorological data base provided by the SOLMET-TMY record for Phoenix, Arizona. This data base correlates with data (direct normal and global horizontal insolation) recorded by APS at the Saguaro site since 1979.

For the flat plate array, sizing was accomplished by utilizing the array/inverter design presented in the Bechtel report. Their results of modeled array performance at a Phoenix site (SOLMET-TMY data) indicated that the ratio of inverter power rating to array power output at nominal operating conditions (NOC: 800W/m2, AM 1.5, NOCT) would be unity to allow 100% of the available collected array energy was delivered to the utility grid. This ratio formed the basis for the array sizing.

The cost estimating ground rules are based upon the program objective of providing the most realistic costs possible, given the level of detail of the central power station design. These ground rules identify the types of costs which are addressed, the level of reporting detail, and the extent of coverage the cost estimates embrace. The ground rules are listed as follows:

- The cost estimate includes all costs from initial development, through plant commissioning.
- No financing or operating and maintenance cost are considered.
- Costs are to be reported in constant 1982 dollars, with final cost summaries to be in both 1982 dollars and 1980 dollars.
- The Cost Breakdown Structure is based upon the cost breakdown structure developed by Theodore Barry and Associates.
- Costs are to be developed based upon using the design generated as the baseline of this CPS study. (i.e., no further development costs or BOS components will be priced)
- Estimates accurately reflect the costs that would be seen at the Saguaro plant site and other defined office and manufacturing/engineering sites.
- Costs for each line item are broken down into:

    - Labor
    - Materials
    - Equipment/subcontract/other

along with

    - Units (hours, pounds, cubic yards, etc.)
    - Rate ($/hr, $/lb, etc.)
    - Burden, overhead, and fee

- Current technology is considered, except for photovoltaic array costs and inverter costs. These were costed parametrically, assuming CPS construction in the mid-1980's time frame.

Several areas of design uncertainty exist pertaining to specific plant hardware. In particular, power conditioning equipment capabilities may be quite different from those assumed in this study with regards to power quality, overload, overload capability, operating input voltage range, etc. Where these caveats influence the plant design every attempt has been made to point them out and to estimate the impact of future development.

Design Summary

This design effort has yielded a flat plate PV central power station with a 100 MWe peak capacity (1,000 $W/m^2$, AM 1.5 and 28° average array cell temperature). The PV CPS is divided into four integral systems (Figure IC-1): PVPS - the photovoltaic power system, acES - the ac electrical system, and ICADS Instrumentation Control and Display System, PFAS - plant facilities and services. The array field consists of 810,000 flat plate, dendritic web, silicon cell module (1.32 m x 1.32 m) arranged into 11.9 long by 2.6 m wide panels containing 18 modules forming a point-of-origin shipping unit. Modules are mounted on a cross frame/torque tube structure set onto concrete end pedestals. One hundred modules in series form a source circuit with 13.47 kW dc output at $\pm$ 980.6 Vdc (bipolar bus)[2]. Four hundred and five (405) source circuits form a subfield which has a dedicated self-commutated power conditioning unit (PCU) containing a 5 MVA inverter. The 34.5 KV intermediate high voltage IHV ac is transmitted via buried cable to the utility grid interfaces switchyard for step-up to the 115 kV, APS transmission grid.

The ac electrical system (acES) utilizes a bus-connected grounding transformer to provide a single point system ground. The main 34.5/115kV step-up transformer is a three phase unit rated at 125 MVA (FOA) coupled with a low-side circuit breaker and a high-side circuit switcher. Relaying is included throughout acES for PCU, main transformer and utility grid protection. The instrumentation, control and display system (ICADS) permits full plant operation with a single operator. ICADS functions are implemented through a 16-bit main frame central computer with real-time processing capability. In-field monitoring and control is implemented through equipment located at each power conditioning unit.

2 At 800 $W/M^2$, AM 1.5, NOCT = 44°C

The utilities, services and security systems provided through Plant Facilities and Services ensure ease of plant operation and maintenance. Major PFAS features include a maintenance/warehouse building, array wash water supply system, field drainage diversion ditches, a field control building and a visitors center.

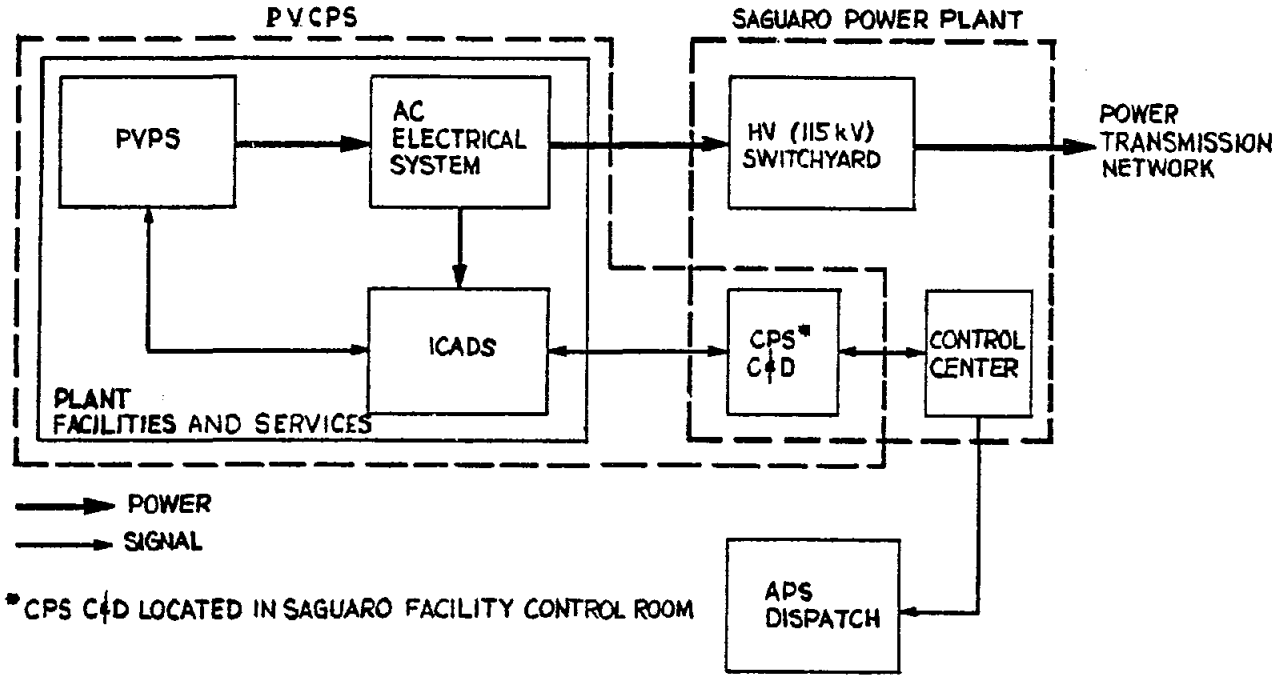


Figure IC - System Block Diagram

## D. Report Format and Acronyms

The report is organized into two discussion areas: 1 - Plant Features/ Design Overview, 2 - Design Studies and Trade-off Analysis. In Section II of this report, the details of the PV CPS design are delineated for each major plant system (i.e., PVPS, acES, ICADS, PFAS). The design studies and trade-off analyses performed are presented in Section III. The engineering rational behind specific design decisions is presented in each section with supporting details placed in the appendices.

The plant construction cost estimates methodology and summaries are discussed in Appendix A. The system specification for the flat plate array, PV CPS, is presented in Appendix B, and includes system-level requirements for design, performance, function and construction. The ICADS and power conditioning (PCU) specifications are presented in Appendix C as well as the specifications for other major plant equipment.

The plant drawing package is presented in Appendix D with a separate table of contents for user reference. A listing of all plant equipment is shown in Appendix E. The array subfield performance data and the performance model are presented in Appendix F.

This report attempts to follow the conventional photovoltaic system terminology used in previous design reports. In particular, the photovoltaic device, array and field electrical nomenclature used in the Bechtel Subsystem Study[3] and the performance/function/test nomenclature used in the JPL/Block V Specification.[4]

Unless specific rating conditions are stated it is to be assumed that all cell/module/panel/array power and voltage values are reported at peak conditions 1000 W/m2, AM 1.5, and 28°C average call temperature. When a nominal rating is stated the reporting conditions are 800 W/m2, AM 1.5 and NOCT.

---

3 IBID, Stolte

4 Block V Solar Cell Module Design & Test Specification for Intermediate Load Applications - 1981-JPL/15101-161.

A complete listing of acronyms used in this report follows.

| | | |
|---|---|---|
| ac | - | Alternating current |
| acES | - | ac electrical system |
| APS | - | Arizona Public Service |
| BOS | - | Balance of System |
| bps | - | Bits per second |
| CC | - | Central Computer |
| CCE | - | Central Computer Equipment |
| CPS | - | Central Power Station |
| CSTF | - | Central Station Test Facility |
| dc | - | Direct current |
| DOE | - | Department of Energy |
| DWG | - | Drawing No. |
| FOA | - | Forced Oil and Air Cooling (Transformers) |
| HV | - | High Voltage |
| Hz | - | Hertz |
| kW | - | Kilowatt |
| Imp | - | Maximum power current |
| Isc | - | Short-circuit current |
| ICADS | - | Instrumentation, Control and Display System |
| IHV | - | Intermediate High Voltage (This study: 34.5 kV) |
| NEC | - | National Electric Code (Nat. Fire Protection Assoc.) |
| NOC | - | Nominal Operating Conditions (800 W/m2, AM 1.5, NOCT) |
| NOCT | - | Nominal Operating Cell Temperature |
| NOV | - | Nominal Operating Voltage |
| MMDA | - | Martin Marietta Denver Aerospace |
| MWe | - | Megawatts Electrical |
| MWh | - | MegaWatt Hour |
| MVA | - | Mega Volt-Amps |
| MVAR | - | Mega Volt-Amps Reactive |
| OA | - | Oil and Air Cooling |
| O&M | - | Operation and Maintenance |
| PCU | - | Power Conditioning Unit |
| PFAS | - | Plant Facilities and Services |
| Ph | - | Phase |
| PV | - | Photovoltaic |
| PWR | - | Power |
| ref | - | reference |
| SERI | - | Solar Energy Research Institute |
| SR | - | Stearns-Roger Engineering Corporation |
| THD | - | Total Harmonic Distortion |
| UGIF | - | Utility Grid Interface |
| Vmp | - | Maximum Power Voltage |
| Voc | - | Open-Circuit Voltage |

## II. PLANT FEATURES AND DESIGN OVERVIEW

The photovoltaic central power station (PV CPS) has been designed to provide the utility with a safe, reliable simple and cost-effective method of electric power generation. The plant configuration meets the function requirements established by Arizona Public Service and listed as follows:

1) Provide for a plant rated capacity of 100 MWe under standard reporting conditions at the PV CPS/high voltage switchyard interface. The standard reporting conditions (SRC) include the PV array electric output under the following conditions.

   a) A total normal or direct solar insolation value of 1000 $W/m^2$ based on intensity measurements using standard solar cell or a solar cell calibrated to terrestrial air mass (AM) 1.5 spectrum.

   b) An average cell temperature of 28°C

   c) A newly installed array with no dust accumulation.

2) Be able to connect to the 115 kVac transmission network. This interface is at a point on the perimeter of the utility high voltage (HV) switchyard.

3) Allow maximum amount of available photovoltaic power to be transmitted to the HV network at the switchyard whenever solar energy is available.

4) Design the power conditioning, control, and distribution equipment to permit intermittent operation of power during daylight due to clouds, dust storms, etc, as well as varying power from the PV CPS to the switchyard.

5) Harmonic voltages introduced by the CPS into the utility grid shall not exceed a total harmonic distortion of 5% RMS of the fundamental voltage on the HV grid.

6) Produce a plant based on modular building block approach to the maximum extent possible.

7) Have the capability to bring modular elements of CPS on-line in stages as they are completed.

8) Have the capability of automatic operation during normal plant operation as well as plant shutdown in the event of any pre-defined emergency shut-down condition.

9) Use utility grid power for essential and non-essential power required by the PV CPS.

10) Provide emergency back-up power source for critical plant equipment such as computer and control and display equipment.

11) Provide sufficient means of testing modular elements for installation checkout and maintenance purposes.

The PV CPS design also considers the following economic and institutional guidelines:

1) Make maximum use of standard utility and power industry practices and equipment, performance standards and existing local standards and codes.

2) Minimize cost of shipping, installation and maintenance.

3) Use hardware commercially available by 1985 to 1986.

4) Consider growth requirements of the utility and capability to expand plant capacity via addition of CPS modules.

Site Layout and Preparation

The 100 MW Photovoltaic (PV) Station consists of a group of 20-5 MW subfields and a plant facilities area. Two sites were considered at the existing Saguaro facility for the 100 MW PV Central Power Plant. Both sites are on land presently owned by the state of Arizona.

The first site was selected as the most desirable location for the PV field on the basis of more favorable access, better drainage, and less proximity to the Marana park. It is located north of the existing plant and the APS 500 kV Cholla transmission line. An in-depth discussion of design issues central to selection of this site appears in Section III-A.

The site terrain slopes upward to the east at a rate of one percent and accesses offsite drainage from a tributary area extending for 10 miles to the Own Head Buttes. This drainage will, however, be intercepted by the proposed CAP Tucson Aqueduct. The aqueduct as presently planned will be constructed with a continuous dike along the uphill side which will intercept the drainage from the east and channel the runoff across the aqueduct in a controlled manner through an overchute structure. This is shown on drawings 849PCPS1126 and 849PCPS4041 in Section D.

The PV site has been designed such that flow through the chute is directed north of the field by means of an earthen channel and dike. See plan on DWG 849PCPS1226 and details of the diversion ditch shown in Sections H and F on 849PCPS4041. The cross sections are designed to balance the earthwork quantities, i.e., the material excavated in the forming of the 0.8 m by 24.4 m wide channel will be sufficient to construct the 1.5 m high and 0.3 m high dikes. The 1.1 m deep resulting channel is designed to accommodate a 100-year storm. In the event of a worse case flood, the field is still protected by an additional 1.2 m dike.

In addition to the main diversion dike described above, channels and dikes are designed to intercept all offsite runoff entering the site. Runoff from the area located between the aqueduct and site perimeter are intercepted by the channel dike shown in Section D and carried past the field in the channel shown in Section E (DWG 849PCPS4026).

Site Preparation for the field itself involves clearing and grubbing to remove the existing vegetation. Subsequent earthwork throughout the field should be minimal and will consist of scraping to fill existing local gullies and smoothing by dragging the area. This will allow runoff from rain water falling on the field itself to flow across the site.

The second site considered was located Southwest and across Interstate 10 from the existing plant. This site was rejected from study due to its inaccessability from the Saguaro power plant and the logistics which would be needed to support such a plant across the Interstate.

A. Photovoltaic Power System (PVPS)

The PVPS (shown in the shaded area of the block diagram below) consist of the flat plate modules, mounting structure, in-field dc cabling, the power instrumentation/control transducers and cabling.

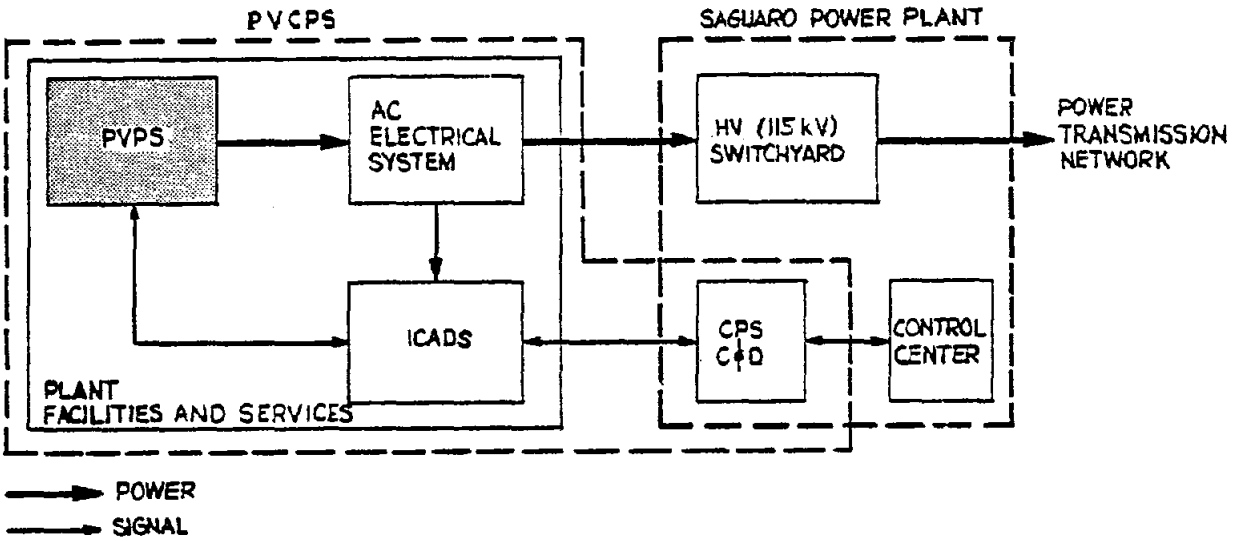


Figure IIA - System Block Diagram

The photovoltaic array consists of solar cell modules, module mounting structures, foundations, electrical wiring including interconnection of modules within array assemblies panels. Junction boxes that are integrated mechanically on the array assembly or panel are part of the array subsystem.

The power conditioning subsystem is comprised of inverters, step-up transformers, and switching devices. The power and signal distribution subsystem consists of the following components:

1) dc power collection components and wiring in the array field and inside the building, such as:
   a) Cabling and connectors;
   b) Junction boxes;
   c) Source circuit interconnection wiring and blocking diodes;
   d) Protective and isolation switching devices.

2) Signal network components and devices, including junction boxes, cabling, and connectors.

3) Lightning protection devices and conductors.

4) Facility ac power network and devices in the array field and in the building, including junction boxes, cabling and connectors.

The PVPS converts solar power to dc electrical power whenever sufficient solar insolation is available and then converts the dc to ac power using an inverter whose output is delivered to the ac electrical system. The specific functional criteria for each component is as follows:

PV Array

1) Arrays are designed and installed in a manner which allows array assembly of a full panel, source circuit, and then subfield to be functionally verified in modular segments and permits subfield start-up in stages.
2) The electrical output of the array subsystem at nominal 2000 Vdc at the NOCT reporting conditions (see Table IIA-2) is as follows:

| | |
|---|---|
| Array Field: | 108.5 MW |
| Array Subfield: | 5.427 MW |
| Array Source Circuits | 13.4 kW |
| Array Assembly or Panel: | 33 W |

3) Provide bypass diodes and circuit redundancy in the module and source circuits to minimize the effects of partial or full shading of the active cell area.
4) Minimize electrical mismatch losses when solar cells in the modules, array assemblies, and panels are electrically connected in series. As a minimum, mismatch losses at the source circuit level is minimized.
5) The insulation resistance between the cell terminals and the module metal chassis are sufficient to withstand a voltage of twice the expected open circuit voltage plus 1000 Vdc without dielectric voltage breakdown.
6) The solar array is constructed in modules for ease of installation, test, shipping, and handling.
7) Source circuits have fusing and manual switching provisions for installation, test, and maintenance purposes.
8) Module mounting structure and array foundations are of low cost design and standardized for ease of installation and maintenance. Structure and foundation designs meet or exceed applicable building codes ACI 301 and 318, ASTM, and NFPA standard.

9) When repair work is performed on an array assembly, all dc and ac power and signals are isolated to prevent damage to the array or personnel.
10) Maintenance of the array assembly presents no inherent personnel hazards.

Power Conditioning Unit

1) The power rating of the inverter is a nominal 5 MW at unity power factor. The inverter is capable of operating at 5.6 MW continuously.
2) The inverter output is connected to a 34.5 kV nominal, three phase, 60 Hz transmission network.
3) The output phase-to-phase voltage unbalance is no greater than 0.1%.
4) Power Factor Correction is supplied for control of the power factor to unity.
5) At full load, the inverter efficiency is 95% or higher and at 25% load the efficiency is 90% or higher.
6) Harmonic voltages introduced into the ac electrical system do not exceed a total harmonic distortion (THD) of 5% RMS of the fundamental voltage on the HV grid. Filters, if needed, are provided and identified for this purpose.
7) The input dc voltage is 2000 Vdc (bipolar) nominal. The input voltage range is between ± 850 Vdc and ± 1150 Vdc.
8) The inverter does not cause electromagnetic interference or misoperation of local consumer communication equipment.
9) The design has a cooling provision to achieve desirable performance. Thermal dissipation goes to the ambient air.
10) The inverter is designed to detect and correct automatically for internal or external malfunctions.
    a) Power SCR's are protected against failure due to faults or overload conditions. Fuses are coordinated so as not to clear during ac system abnormal conditions including lighting strikes. These fuses are easily accessible for inspection, maintenance, and replacement.
    b) The inverter is protected against short circuits and faults on its output side. The circuit breaker is designed so that it is capable of interrupting the fault current.
11) The inverter is designed to operate at the maximum power point of the array subfield I-V curve, or other specified point. The inverter is capable of synchronizing its output with the utility grid voltage.
12) The inverter neutral is high resistance grounded at a single point using a grounding transformer.
13) The inverter provides key performance data to the central control room. These data are displayed on the inverter console panel.

Power and Signal Distribution

1) The wiring and layout of the PV arrays are designed to minimize the power losses due to field wire resistance. Losses are limited to not more than 1.0% of the rated array output.
2) Array field wiring and signal wiring conforms to the applicable sections of the National Electric Code (NEC).

Array Control and Data Acquisition

1) Provides control and accepts status for the array assemblies.
2) Multiplexes and samples analog instrumentation signals, and stores instrumentation signals in memory. The analog to digital converter has the following characteristics:
   a) Minimum dc conversion speed of 100 measurements per second;
   b) 8-bit conversion accuracy;
   c) Normal mode rejection for 50 Hz of 50 db;
   d) Common mode rejection (with up to 1,000 ohms unbalance) of 140db; and
3) Preprocesses and converts the instrumentation data into engineering units.
4) Condenses the array status information into a tabular form.
5) Accepts control signals from ICADs and transmits status and instrumentation data to ICADS.
6) Provides a manual control and display panel.

1. Photovoltaic Array

a. Module Selection - A 1.32 m x 1.32 m, 178.8We peak glass-covered aluminum framed module containing dendritic web cells has been selected for population of the flat plate array. It was assumed that a 1.32 m square module represents the largest size that can be handled effectively by one person in either installation or maintenance activities. Other considerations in selection of the module are the determination of an optimum module size for large array fields that would take into account in-field handling. It is desirable to minimize the use of module framing materials in relation to cell area, wind loading, and module voltage/current output requirements to assist field installation. Use of a different module size would have a direct effect on the design of the mounting structure/foundation, field layout and dc cabling.

The photovoltaic module utilizes ribbon cells with an assumed power conversion efficiency of 0.142. Current dendritic web silicon sheet technology has produced laboratory cells with near 0.17 efficiency; discussion with Westinghouse Advanced Energy Systems Division personnel have indicated that the 0.142 efficiency would be realistic for 1986 production cells. Table IIA-1 outlines the basic module performance assumptions made for this study.

Table IIA-1 Photovoltaic Module Characteristics

Size: 1.32m x 1.32m
Construction: Extruded Al Frame, EVA Pottant, 0.32cm fully-tempered glass, 0.13mm craneglas, mylar backing
Cells: Dendritic web, silicon
NOCT: 44°C
Bypass diode: 1 per module
Aperture: 1.486 m2

PERFORMANCE

| | Peak Conditions 1000w/m2, AM 1.5, 28°C Cell | Nominal Conditions 800 w/m2 AM 1.5, NOCT |
|---|---|---|
| Cell Efficiency | 0.142 | 0.133 |
| Module Efficiency | 0.122 | 0.133 |
| Voc | 24.5 Vdc | 24.4 Vdc |
| Isc | 9.52 A | 7.61 A |
| Vmp | 19.91 Vdc | 19.81 Vdc |
| Imp | 8.98 A | 6.80 A |
| Pmp | 178.8 We | 137.7 We |

Design and performance requirements for the above module should meet or exceed those of Section II, Block V Specification5 with exception taken to the maximum module dimensions and the minimum electrical voltage isolation. The minimum electrical voltage isolation requirement for this module should be 4200 Vdc. This requirement is based upon a maximum 1600 Vdc to ground bus with two times bus voltage plus 1000 Vdc safety margin. Further discussion of module voltage isolation appears in Section III B-2.

The additional requirements necessary for this PV CPS design are addressed in detail in Appendix B, CPS Flat Plate Array Specification, and in Appendix C, specification for Flat Plate Module/Field Installable Unit. Performance degradation at the module level is to be less than 15% over the 30-year plant design life.

Module performance is verified by the use of the standard resulting from ASTM Draft Document E161RO "The Electrical Performance of Non-Concentrator Terrestrial Photovoltaic Modules and Arrays Using Reference Cells". The module manufacturer provides ten (10) calibrated secondary standard cells of the same manufacturing lot as those of the supplied modules and satisfying the ASTM standard resulting from ASTM Draft Document 130R7, "Standard Methods for the Calibration and Characterization of Non-Concentrator Terrestrial Photovoltaic Reference Cells".

b. Panel - The next modular array building block is the panel. Eighteen modules make up a panel which is the smallest field installable unit (see DWG. 849 PCPS 1230). The panel measures 2.64m x 11.9m with two rows of nine modules factory assembled and pre-wired in series. The panel size provides for easy shipping via standard 40 foot tractor-trailer and/or via rail. The panel steel frame forms a part of the end-pedestal/torque tube mounting structure conceived by Bechtel National Inc. and described in detail in Section II A-2. The eighteen serially-wired modules comprise a panel with nominal output of 2.42 KWe at 356 Vdc at 800 w/m2, NOCT. Module pigtails are crimp connected via #10 AWG, 2kV, single conductor cable. The choice of #10 AWG cable resulted from a trade study described in Section III B-3. Crimp connection was chosen over the quick-connect type for cost reasons. If quick-connect devices are used initial cost would be higher with some increase in circuit maintainability. Grounding of the panel frame is accomplished via a strap-type conductor connected to exposed underground copper rods. A detailed discussion of PVPS grounding appears in Section II A-5.

5 "Block V Solar Cell Module Design and Test Specification for Intermediate Load Applications," 1981, JPL/1510-161.

c. Array - The photovoltaic array consists of 810,000 modules or 45,000 panels organized into 20 subfields each with an individual PCU. The PV array field layout depicting the arrangement of subfields and other plant facilities appears in DWG 849 PCPS 1226. The total land requirement for the PVCPS site (including access) is 404.4 ha (1.56 $mi^2$). The array field area consists of 350.2 ha (1.35 mi2). Detailed description of the PV CPS site plan, including drainage, access, security, facilities, and utilities appears in Section II-D.

The choice of a 5 MWe subfield modular size was based upon the results of Bechtel's Subsystem Tradeoff/Optimization Study1. The subfield layout is depicted in DWG. 849 PCPS 1227. The 5 MWe subfield contains 40,500 flat plate modules arranged into east-west rows of 50 panels each with north-south access road dividing the row in half. The east-west array rows number 45 with 23 rows north of the main east-west subfield access road and 22 rows south of this road. The PCU is located just east of the exact center of the subfield. Panel rows are separated in the north-south direction by 5.4 m, or approximately 2.5 times the panel slant height.

Rating of the PV CPS installed capacity utilizes accepted utility practice in stating capacity at "generator" ac output. This is equivalent to the peak ac power on the IHV (34.5 kV) bus (i.e., 100 MWe). However the peak array dc output, using 1000 $W/m^2$, 20°C conditions is somewhat arbitrary for PV arrays since the Phoenix TMY record lists conditions in which subfield output exceeds 6.45 MW.

The array field was sized using a methodology developed at MIT/Lincoln Labs and the Jet Propulsion Laboratory (JPL). The methodology evaluates flat plate array performance at various sites with insolation/meteorological characteristics described by SOLMET-TMY data. Array dc input to an inverter was calculated hourly over the year to discern the relative magnitude and distribution of array power input in comparison to a particular inverter rating. Utilization of an inverter which would clamp either voltage or current when the array power exceeds the rating of the PCU (see Figure IIA-1), the ratio of PCU power rating (Plim) to array power calculated at nominal conditions (Pnom) was found to be site dependent and varied with the amount of annual energy lost due to the clamping characteristics. Utilizing Phoenix as the nearest SOLMET site to Saguaro, the ratio was found to be

$$\frac{Plim}{Pnom} = 1.00$$

for utilization of 100% of the available array energy. Using Plim = 5.21 MWe (i.e., 5MWe ac/0.96 efficiency) and writing

$$Pnom = Nsys\ Nmod\ Pmod\ (@800\ W/m^2,\ NOCT)$$

where,

Nsys = dc system power collection efficiency
Nmod = number of modules
PMod = module output at nominal conditions

Then the resulting Nmod was,

Nmod = 40,500.

The dc system power efficiency as utilized above was

Nsys = Nd Nwdc = 0.955

Where,

Nd = blocking diode efficiency (0.995)
Nwdc = dc wiring efficiency (0.99)
Nbmm = branch circuit mismatch efficiency (0.97)

These estimates were used for sizing analysis resulting in a dc system power collection efficiency of 0.955. A power flow diagram, depicted in Figure IIA-2, shows the physical relationship of these factors in relation to the rest of the PVCPS. As will be discussed later, actual design analysis resulted in a power efficiency of 0.98, greater than the 0.955 estimate used in sizing. This resulted in an approximate 0.8% loss in plant annual energy output due to sizing capacity assumptions used for the inverter.

A dc bus voltage of 2000V was utilized in this study as a result of the Bechtel trade studies7. A bipolar (i.e., ± 1000 Vdc) bus was chosen to allow the use of modules requiring a lower voltage isolation thereby reducing module costs associated with extra dielectric materials between the dc bus and the module frame or mounting structure.

7 Op. Cit., Stolte,

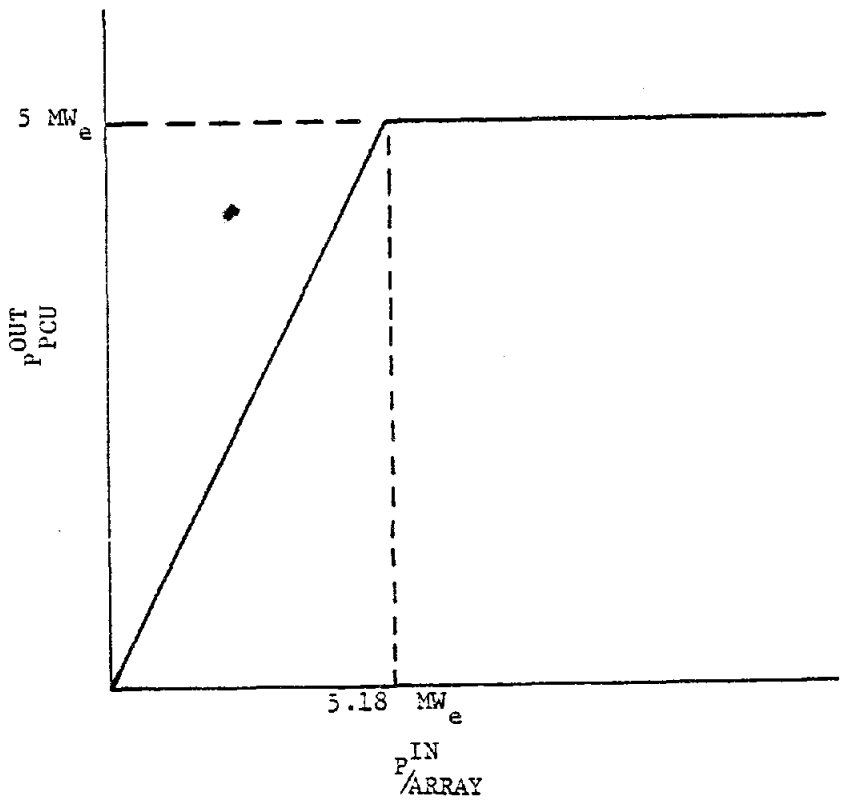


Figure II A-1 PCU Output Characteristics

The actual dc bus voltage resulting from 100 flat plate modules connected in series was nominally ± 980.6 Vdc at NOC. Therefore, the subfield consists of 405 source circuits each with a nominal 13.4 kW rating (800 w/m2, NOCT). Table IIA-2 summarizes design data for the 5MWe subfield.

A source circuit wiring diagram is shown in Figure IIA-3. Source circuit cables (#8AWG) are direct buried between the array and dc distribution boxes. Underground entry is provided by weather head conduit eliminating the use of more expensive dc source circuit junction boxes. The center-tap ground was physically located at the steel mounting structure which was connected to earth ground (see DWG No. 849 PCPS 1230) via a buried #2 AWG bare conductor. Further discussions of array grounding system design appears in IIA-5.

At the dc distribution box (see 849 PCPS 1228, Detail 6) 18 source circuits are collected in a NEMA-4 enclosure. Two copper bus strips provided termination for the +/- branch bus cables. The source cables are terminated onto blocking diode assemblies (one per +/- bus) which fit into screw terminals on the copper bus. Silicon-type lightning arresters connect each power bus to the ground bus.

Table IIA-2 5 MWe Subfield Characteristics

| | |
|---|---|
| Land (total) | 20.2 ha |
| Land (array) | 17.5 ha |
| No. 1.32 m x 1.32 m modules | 40,500 |
| No. 2.64 m x 11.9 m panels | 2,250 |
| No. of source circuits | 405 |
| Source circuit ratings | 13.4 kW nominal |
| Nominal dc bus voltage | ±980.6 (to ground) volts |
| dc power collection efficiency | 0.9806 |
| Estimated annual energy production* | 247 GWh |

*Based on Phoenix, AZ. SOLMET-TMY data (Appendix F)

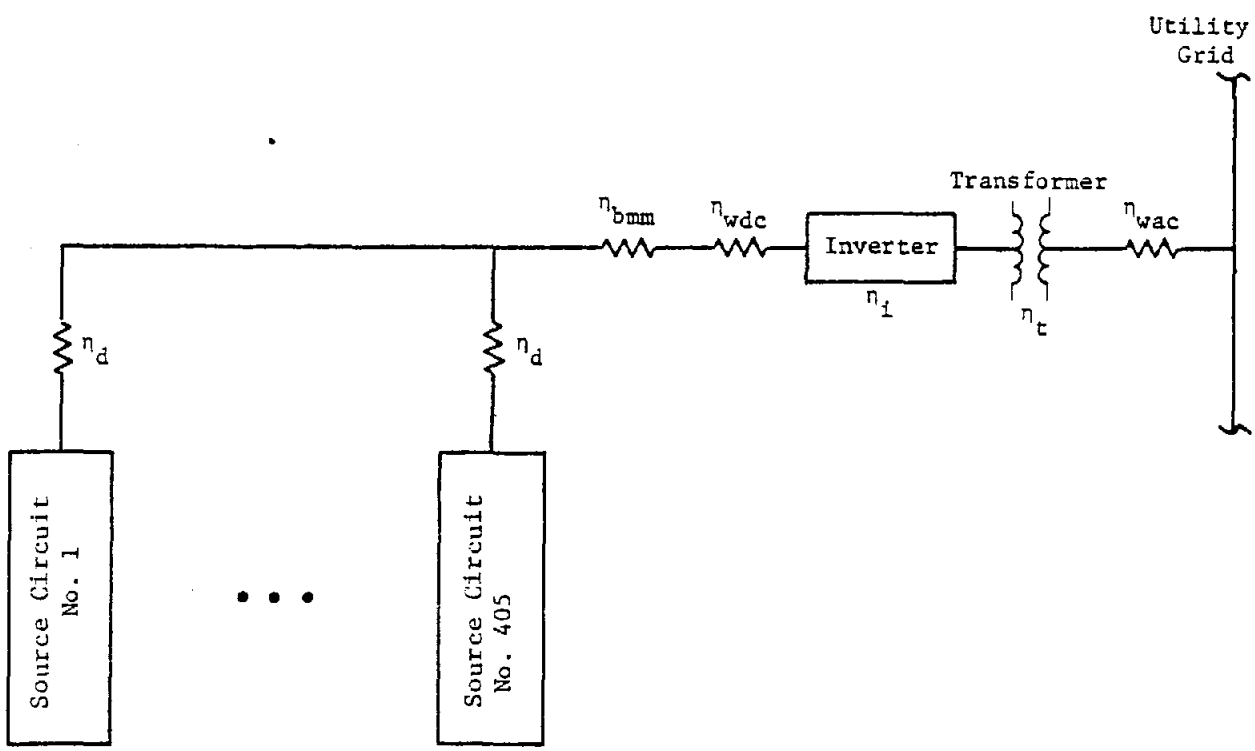


Figure IIA-2 - Power Flow Diagram

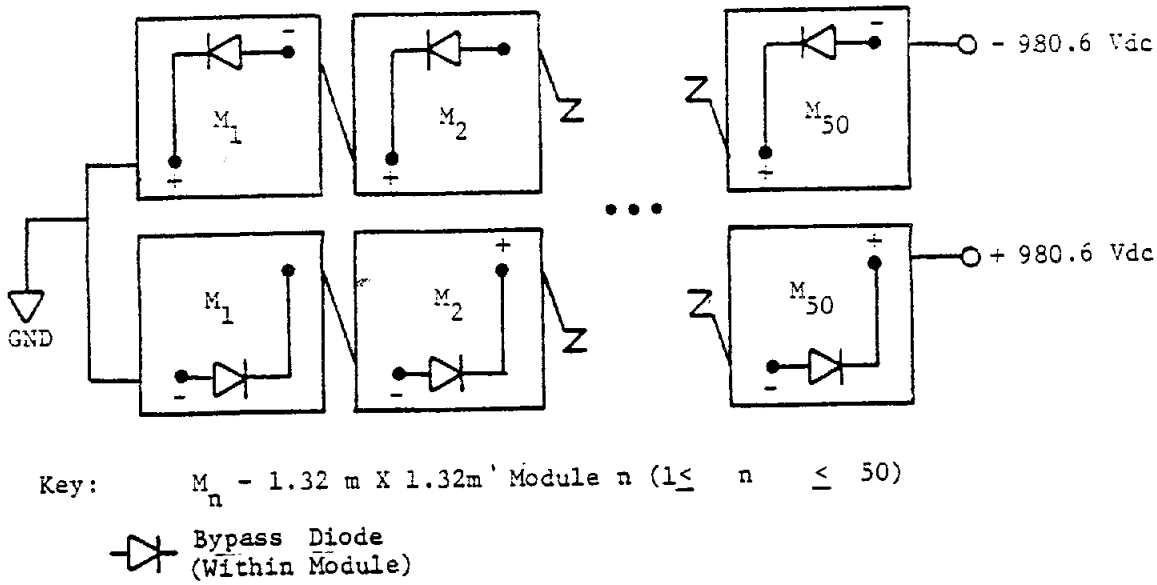


Figure II A-3 Source Circuit Schematic

2. Mounting Structures

a. Description

Several possible candidates for structural systems were considered for the flat plate photovoltaic field. Typically, each system displayed a number of pros and cons, thereby making it necessary to perform tradeoff studies.

The first option was a modified version of the Bechtel8 design consisting of a steel frame-work mounted on concrete piers. Structural analysis showed this to be the most cost- effective system (see DWG 849 PCPS 1230). The structure was designed to meet the loading requirements of ANSI A58.1-1972.

Positive aspects associated with this design include:

- o Minimal site preparation required.
- o Can be fabricated from standard components.
- o Soil erosion has a minimal effect on the structure.

A total of 46,800 concrete piers are required for the 100 MW photovoltaic field. The pier diameter is 18 inches; the above grade height measures 2.5 feet with below grade depths ranging from 8.5 to 12.5 feet, depending on field location (see mounting structure spec., Appendix C). Structural reinforcement is provided within the foundation by five vertical reinforcing steel bars and circular ties set at 18 inch spacings.

Secondly the Battelle-Columbus Laboratories design using steel hat-section foundation stakes and nominal 4 x 4 wooden transfer beams was studied. Although cost effective, this design was deemed unsatisfactory due to the possibility of soil washout around foundation stakes (3'-8" soil penetration depth) during a design 100 year storm. In addition, the wooden transfer beams create the need to develop a more complex electrical grounding scheme than is necessary for a structure built entirely of steel.

A third structural system utilizes 12" diameter timber poles to support 8' x 20' panels. The poles are driven into the ground to depths of 10 to 12 feet, thereby reducing the effect of soil erosion. Initial cost for this type of system are low, providing there is sufficient timber availability near the photovoltaic field site. Due to the large number of timber poles required for the 100 MW field (46,800), this approach is not practical at the Saguaro site.

After looking at all three design configurations, it was decided to utilize the modified Betchel version.

b. Array Installation

The array installation procedure includes the installment of concrete foundations, support structures and photovoltaic panels following site preparation and field wiring layout. A fence is placed around the field perimeter to provide security during the array installation phase (as well as after facility completion).

Access to the construction site is provided by Interstate 10 as well as the main line of the Southern Pacific Railroad, with two spurs currently being used to deliver heavy equipment to the Saguaro site. A staging area would be set up at a location near the railroad spur (see DWG 849 PCPS 01126-2).

The overall field is divided into two 50 MWe modular units for construction purposes. Each modular unit is further broken down into ten 5MW subfields. A detailed discussion of bus wire installation for a 5 MW subfield may be found in a report published by Burt Hill Rittelmann Associates.9

8 Op. Cit., Stolte

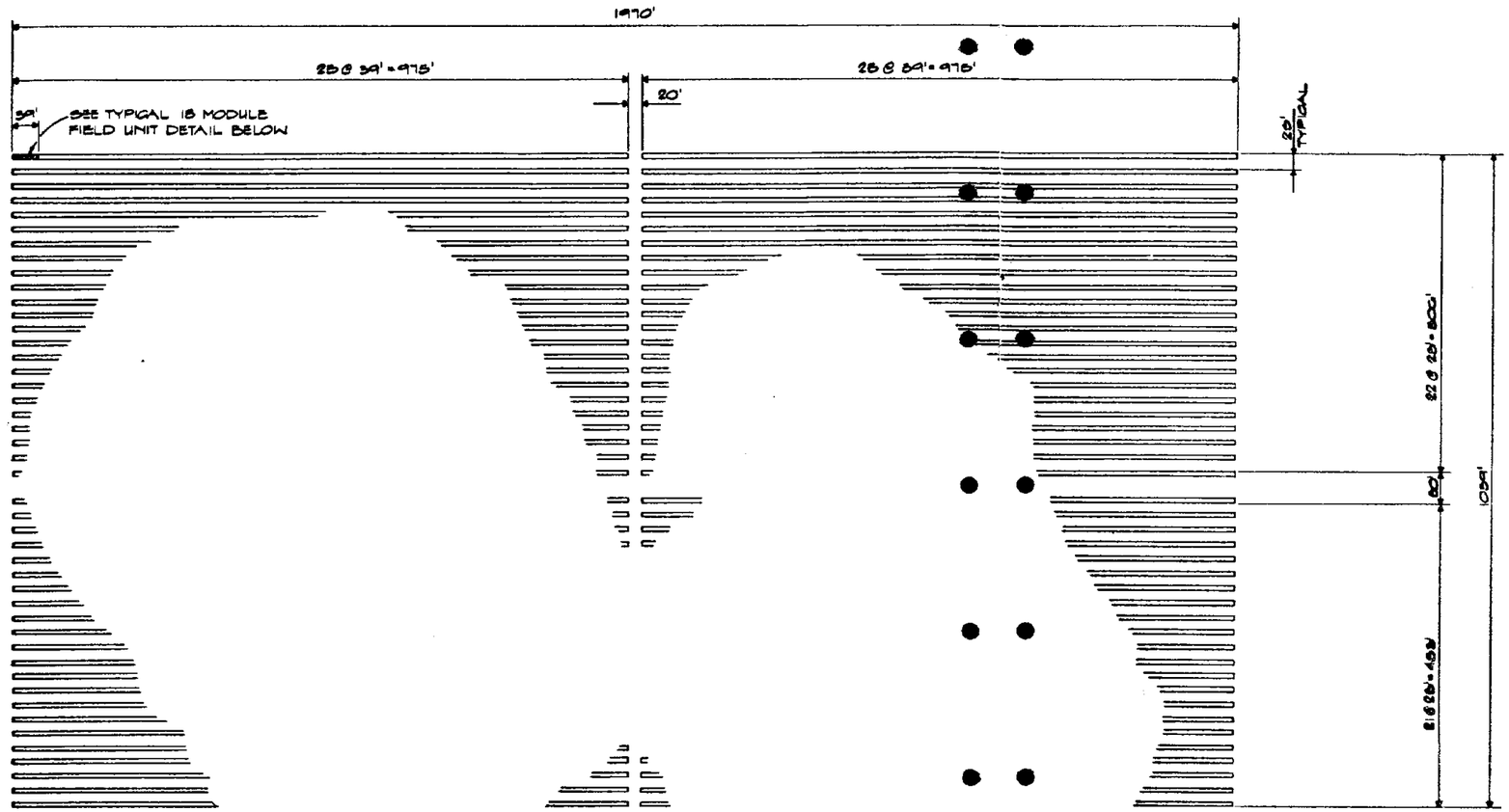


TYPICAL 5MW SUBFIELD
SCALE: 1"=100' (20 THUS)

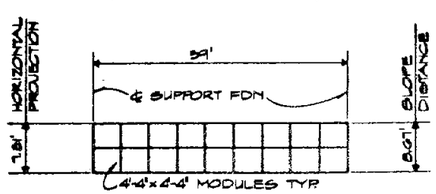


TYPICAL 18 MODULE FIELD UNIT
(2250 UNITS PER SUBFIELD)

Figure IIA-4 Subfield Layout



849PCPS1227

| NO. | REVISIONS | DATE | BY | CHK'D | APP'D | NO. | REFERENCE DRAWINGS |
|---|---|---|---|---|---|---|---|

PRINT RECORD: DATE / FOR / REVISED / CUSTOMER / FIELD / INTRA CO

SIGN. RECORD: DRAWN CL 1/8/80 / CHECKED / MECH. OK / STRUCT. OK / ELECT. OK / PIPING OK / INST'R. OK / CIVIL OK

DRAWING STATUS: ISSUED / DATE — PRELIMINARY; FOR COMMENTS AND/OR APPROVAL; APPROVED FOR CONSTRUCTION; REVISED & APPROVED FOR CONSTRUCTION (REV.)

NOT APPROVED FOR CONSTRUCTION UNLESS SIGNED & DATED. REVISED ALL PRINTS BEARING EARLIER DATE SHALL BE REVISED.

5MW SUBFIELD LAYOUT
FLAT PLATE P.V.

100MW PHOTOVOLTAIC CENTRAL POWER STATION
SAGUARO POWER PLANT — RED ROCK, ARIZONA

SCALE 1"=200' — Stearns-Roger ENGINEERING CORPORATION — ORDER NO C-25393

DWG. NO 2K01-23 — SHEET NO. — REV.

The foundation installation begins by locating and aligning an adjustable plane transmitting laser to establishing the necessary reference points in the subfield. A portable drilling rig is centered over the reference points and an 18" diameter hole is augered. The depth of the hole ranges from 8.5 to 12.5 feet at the Saguaro site depending upon field location (as shown on DWG 849 PCPS 1230). The process is repeated for the remaining foundation locations in the subfield.

A sonotube and prefabricated reinforcing bar assembly is lowered into each hole prior to filling the holes with 3000 psi concrete. Two threaded 5/8 inch anchor bolts are installed on the exposed end of the poured concrete. The concrete piers should be allowed to cure per normal construction practices prior to panel installation.

After the concrete has cured, the structural steel supports are secured to the foundation by screwing nuts on the threaded anchor bolts. The 8 foot by 20 foot photovoltaic panels are installed with the aid of a forklift as shown in Figure IIA-5.

In order to minimize the amount of infield labor, the use of a specially designed interface member is recommended to facilitate the securing of the flat plate panels to the support structure.

The panel electrical connections (crimp-type) are made immediately after securing the panels to the support framing. The panels are to be tied to the panel frame work, shorted to ground, prior to connecting the live wires. The wiring for one row of panels is connected to the bus wiring at the point where the conduit extends from the bus wiring trench.

This panel attachment scheme is repeated for the remaining subfields in the 100 MWe field. Several of the installation steps may be performed simultaneously to expedite the completion of the array field (see construction schedules in Appendix A).

3. Power and Signal Distribution

a. dc Power Cabling and Installation - The dc cabling utilized in the design of the 100 MWe PVCPS is used for the distribution and collection of the flat plate array output. Initial design criteria specified that the energy losses between collection and input to the inverter be less than one percent. (See Table IIA-3).

9 "Automated Installation Methods for Photovoltaic Arrays"., Burt Hill Kosar Rittlemann Associates, 1981, SAND 81-7192, p. 4-20

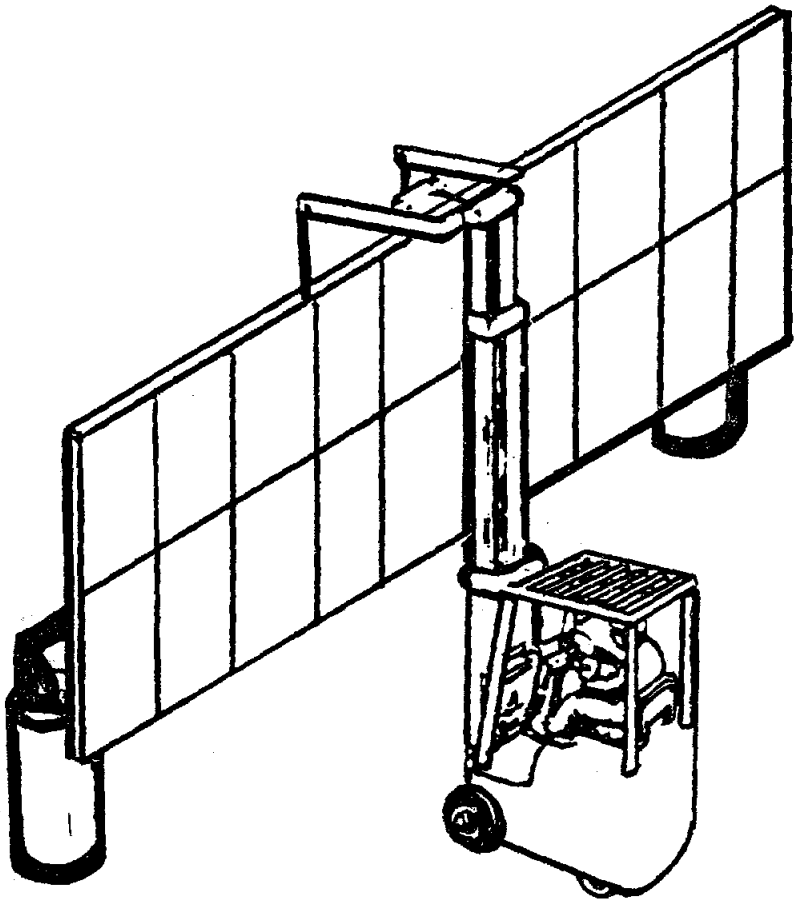

Figure II A-5 Flat Plate Panel Installation

The size of the dc cabling was determined primarily by its current carrying capability after considering derating criteria for direct buried cables. Once the derating was considered the KW losses were checked and found to be less than one percent. The 2 conductor No. 8 AWG cables used for individual branch circuits and 3/c No. 4/0 AWG cables for PCU feeder circuits are the smallest 2000 volt rated cables that wiring manufacturers currently produce. The reason for this is due to insulation breakdown caused by corona discharge across the diameter of the conductor. Somewhat smaller cables (i.e., #10 AWG) would be considered more cost-effective if they could be purchased.

The 405 source circuits are paralleled into 22 PCU feeder circuits at each dc distribution box.

DC cabling is installed in 30 inch deep trenches located between the rows of photovoltaic arrays. The direct-buried option was taken because of the cost of materials/installation of a concrete duct bank system and the inherent array shading resulting from an overhead cabling scheme. Specification of these dc power cables appears in Appendix C under "dc Cabling (Power)".

Table IIA-3
dc Cable Losses at Nominal Conditions

| | Average Losses (WATTS) | Average Losses (%0) |
|---|---|---|
| Branch Circuit (2/c No. 8) | 59.24 | 0.435 |
| Feeder Circuit (3/c No. 4/10) | 815.91 | 0.333 |

b. Signal Cabling - All control signals used in plant control are digital and are serially transmitted at data rates below 1200 baud. Signals of this type can be transmitted using relatively low grade signal lines over distances twice those required for the PV CPS. Low cost implementation is therefore possible using twisted shielded pair #18 wire with rodent protection. This wire can be placed in the same trenches as other field wiring but should be separated as far as possible from both ac and dc power lines to minimize electrical interference.

4. Power Conditioning Unit (PCU)

a. Inverter - The PCU consists of a skid mounted inverter, transformers and switch gear. The inverter capabilities have been assumed without benefit of knowledge of impending design evolution in large, PV inverters.

The dc power from the photovoltaic bus is converted to ac power with a solid state, static inverter. The inverter is rated at 5.0 megawatts continuous and supplies three phase power into a standard 60 Hz IHV power grid. The inverter is sized to supply a 10% overload capability for 60 seconds. For details of physical, functional and construction specifications refer to Appendix C, PCU specifications.

A self-commutated inverter was selected over the line-commutated type. Line-commutated inverters require larger rectifier transformers; their output filters are larger and much more expensive. The line commutated inverters also require more power factor correction hardware.

The voltage window (the ratio of the maximum dc input voltage divided by the minimum) should be 1.5:1 at power level of 5 megawatts. This yields a 1600-2400 Vdc operating range. Outside of this range the inverter must exit the array peak power tracking mode and clamp input current.

The efficiency of the inverter should be 96.5% at full rated input and a minimum of 84% at one-quarter load. These numbers are sensitive to the dc input voltage range. Figure IIA-6 depicts the inverter efficiency profile assumed for design purposes.

The inverter senses the phase and frequency of the utility power grid and automatically synchronizes itself to the utility grid (intermediate high voltage transformer). Upon synchronizing the PCU connects itself automatically to the IHV bus.

The inverter supplies only real power to the grid unless an APS command for VAR flow is made through ICADS.

The following three operational modes exist for the inverter.

a. Peak Power Tracking - This is the normal operating mode. When supplying power to the grid the inverter monitors the output power and adjusts the dc input voltage operating point to the voltage that represents the array maximum power output point.

b. Current Clamp - In this mode, the inverter senses input dc voltage out of the 1600-2400 V range and clamps the input current, disabling the peak power tracker. Inverter operation continues, with reduced overall efficiency until an in-range voltage condition reappears, whereby the inverter shifts back to peak power tracking mode.

c. I-V Trace - This is a test maintenance mode in which the inverter acts as a variable current load to the photovoltaic bus. During this test the inverter loads the bus from approximately 3600 amps dc to open circuit. During this operation the inverter monitors the input current and voltage as the load is changed for the purpose of generating an I-V plot of the photovoltaic bus.

The inverter will contain the capability of monitoring the following functions and transmitting their values to the central computer via the serial data bus:

a. dc bus voltage and currents
b. Power output
c. Inverter operating status

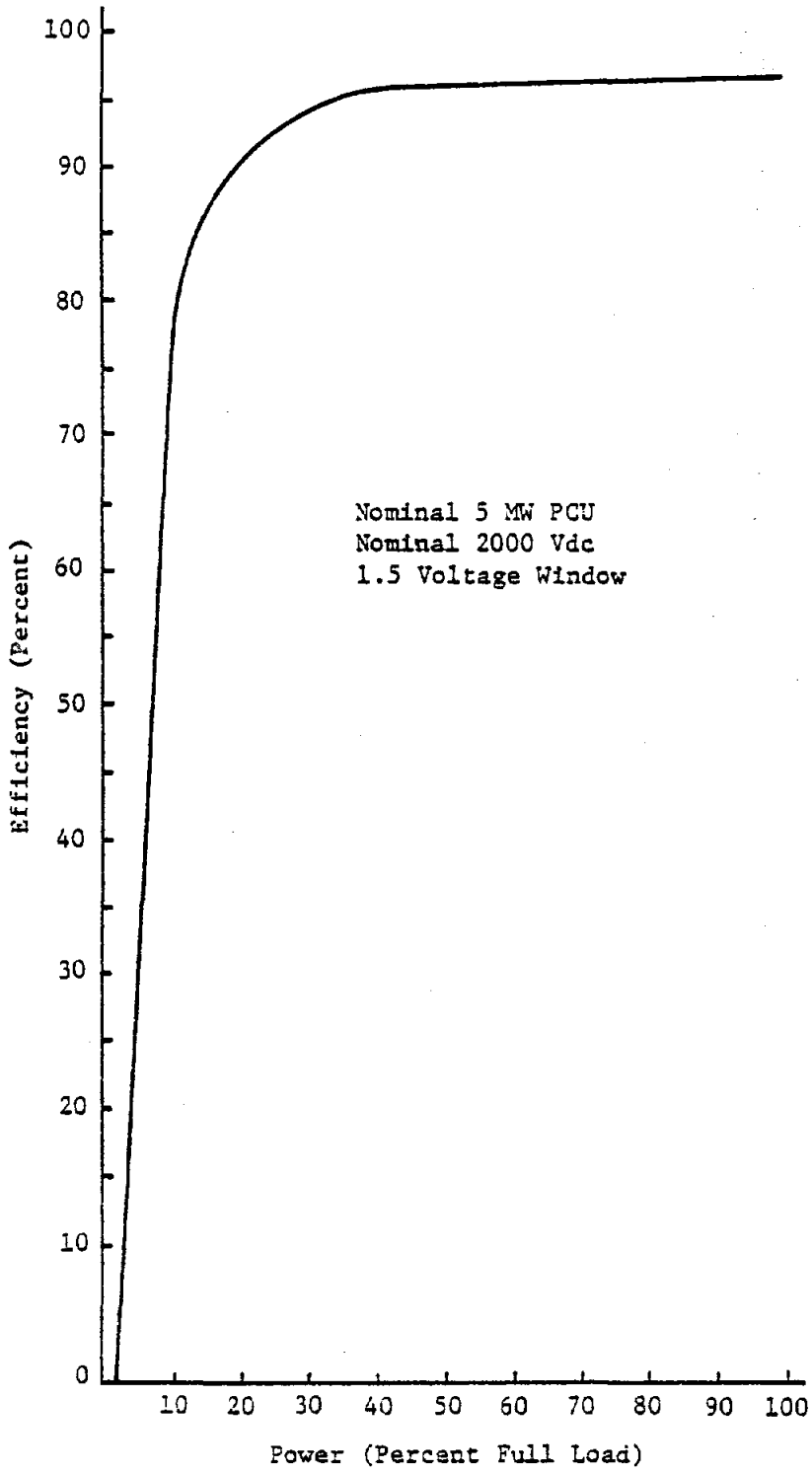


Figure II A-6 Inverter Efficiency Profile

All hazardous voltages shall be enclosed or otherwise protected to eliminate the risk of electrical shock to operating personnel. All equipment will be grounded locally to earth ground.

The inverter will feature the appropriate over-temperature, smoke alarm, etc., devices that will initiate shutdown in the event of an abnormal condition.

Physical Characteristics

The inverter is packaged into modular racks whose size and weights are compatible with U.S. commercial rail and freight carriers. The inverter enclosures are weather-tight and capable of operating unprotected out-of-doors. The inverter is skid mounted on a 3.7 m x 5.s m concrete foundation.

5. Transformers/Switchgear - The ac output voltage of the PCU is rated 5 MVA nominal at 34.5 KV. The inverter output of 2000 Vac is connected to the 2000V-34.5 KV step-up transformer through a 2000 amp power circuit breaker which is used for load switching and fault clearing. The physical location of this breaker is within the inverter module. Any relaying required as shown on DWG 849 PCPS 2001-1 is to be located in a weather protected enclosure, within the PCU manufacturers inverter module. A discussion of relaying follows in IIB.1.a.

   Auxiliary power requirements for the PCU are taken off the load side of the 2000 amp breaker. A delta-delta transformer is provided for auxiliary PCU power requirements and synchronization. The delta-delta winding insures no phase shift to provide sync to the utility grid. The estimated loads are as follows:

   1. AC modulation control (2 kW nominal)
   2. Cooling auxiliaries (2 kW nominal)
   3. Auxiliary power loads (i.e., relaying, etc.) (2.1 kW nominal)

6. PVPS Grounding/Lightning Protection

   The lack of a widely-accepted standard for array grounding/lightning protection presents a special problem in system design. The best approach for the PV CPS was to utilize documentation of satisfactory long-term performance of particular protection schemes as a baseline. The major requirement was to provide a permanent and continuous electrical path to earth ground for all array structures (see SY.5. 2, 3 in SERI Interim Performance Criteria Document11).

11 "Interim Performance Cirteria For PV Energy Systems," SERI/TR-742-654, December, 1980.

Array grounding is accomplished using two ground rods (DWG 849 PCPS 1242) in each subfield row placed below grade. The ground rod sizing analysis utilized the requirements of NEC Article 250-81, -83, -86. Installation of the lightning protection devices follows Code 175 of the Lightning Protection Institute. The ground resistivity value at Saguaro of 55 ohm-m allows the use of driven grounding rods. This is a more favorable arrangement than an extensive and expensive counterpoise system. The array structural ground is completely separate from the dc bus return ground conductor.

PCU grounding was accomplished by following the established IEEE-80 standard. The PCU grounding system is a counterpoise system with driven ground rods and a bare buried copper conductor. (See DWG 849 PCPS 1228). All individual components are connected to the ground mat. Grounding inside equipment is connected to a common ground bus sized per the PCU manufacturers standard practice.

The maximum array source circuit contribution to ground fault current that can be realized at the source circuit level was calculated from the array performance model (see Appendix F). This current was calculated at 1200 $w/m^2$ global normal insolation, 50°C ambient and short-circuit conditions. Its value of 11.92A, however, is far less, by several orders of magnitude, than current surges due to lightning.

The frequency of occurrence of direct lightning strikes at the Saguaro site can be estimated from the work of C. B. Rogers[12] and knowledge of the field size and isokeraunic level. The number of yearly direct strikes in the array field ($A_f$=1.56 $mi^2$) near Tucson (isokeraunic level, I = 30 thunderstorm-days per year) is:

$$N = 0.0052\ A_f \quad 1 + \frac{(\text{Latitude } 2)}{30} \quad I^{1.7}$$

$$= 0.0052\ (1.56) \quad 1 + \frac{32.5\ \ 2}{30} \quad (30)^{1.7}$$

$$= \text{approximately 6 strikes/year}$$

This number represents a rather important hazard to the array field. Therefore the analysis used in sizing the grounding rods was necessarily conservative.

Protection of the dc bus from lightning induced current surges was accomplished by using surge arrestors to shunt excessive current to ground at each dc distribution box. The arrestors utilized were GE Tranquell devices with a 2.7KV rating.

No attempt has been made to make use of lightning masts on either array pedestals or field structures. The use of lightning masts which would have to be as tall as their lateral protection is not cost effective. Also, no attempt was made to evaluate the optically induced array currents from a lightning flash.

---

12 Rogers, C.B. Proceedings of the 14th IEEE PV Specialists Conference, P. 131, January 1980.

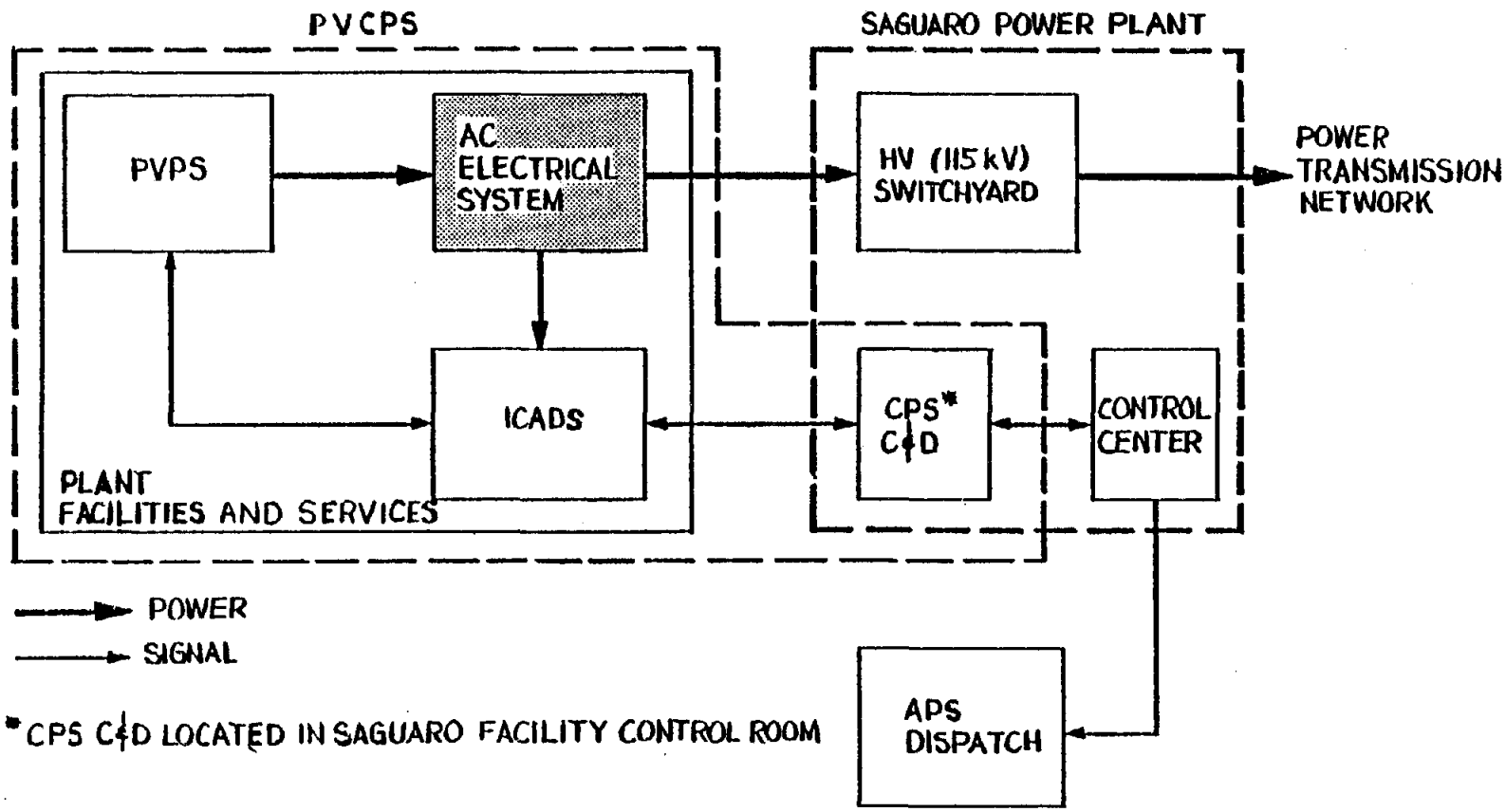


Figure II A-7 System Block Diagram - acES

## B. ac Electrical System (acES)

The acES (as shown in the shaded area of the block diagram on the previous page) provides the interfaces between the PVPS and the utility grid. This system includes transformers, a switchgear, and manual and automatic control of the relaying and switching.

Transformers are used to 1) step-up the ac voltage input from the PVPS to the level used for grid transmission; 2) provide the power quality requirements of the switchyard transmission network; and 3) step down the ac voltage input from the switchyard which supplies the facility power to the CPS.

The switchgear performs the repetative switching cycles expected during the operation of the CPS. It is designed to 1) provide ac power switching between the CPS and the switchyard, 2) provide relaying and protection of the acES and the PVPS, 3) minimize the power loses due to field wire resistance in the main ac power line, and 4) provide switch position status signals to the ICADS.

### 1. System Configuration

a. One Line Diagram - A system-level understanding of the PV CPS can be gained from a description of the plant one line diagram (i.e., DWG 849 PCPS 2001-1 in Appendix D); ac power is received from the inverter and connects to the ac system through a 2000 A circuit breaker which is to be used for load switching (synchronizing) and fault clearing. The relaying shown on DWG 849 PCPS 2001-1 is intended to cover the contingencies which will be discussed later.

Auxiliary power for the PCU is obtained from a delta/delta transformer so that modulation control is in phase with the APS system line voltage to which the system is synchronized.

Based on an evaluation of equipment cost and operating losses (see Section IIID), 34.5 kV has been selected as the collection voltage. Each 5 MVA unit connects to the 34.5 bus through three phase switch fuses having a fault rating of 1000 MVA. These particular fuses can be used and fuse coordination obtained due to the generation having a fault contribution of only 1.15 times the full-load corrent. The fuses operate only for current flow away from the 34.5 kV bus and into the PCU units.

The collected power at 34.5 kV ties to the utility 115 kV system through a single, three phase transformer rated 75 MVA OA at 55°C rise with an impedance of 8.5%. The transformer is supplied with FOA cooling capability. This permits operation up to 125 MVA for the same temperature rise and operation up to 137.5 MVA with a 65°C temperature rise. The transformer has a 115 kV circuit switcher and a 34.5 kV main low-side circuit breaker.

The 34.5 kV system is grounded at a single point in order to eliminate any path for circulating triple "n" harmonics. The use of a bus connected grounding transformer has two advantages. First, ground current is limited to a relatively low value and secondly, the IHV bus and majority of the ac system retains its grounding following opening of the main transformer low-side breaker. This grounding approach is desirable to control transient overvoltages. The acES surge arrestors will be rated for line to line voltage even though they are connected line to ground in order to withstand ground fault system conditions. Similarly, all wye connected voltage transformers will withstand 1.73 times rated voltage for one minute. The grounding transformer is connected to the bus through a 150 A switch fuse. Fuse coordination is achieved during system ground faults since the faulted circuit will see 3 times Io whereas the fuses associated with the grounding transformers will each see Io. Io is defined as the zero sequence event.

In the event of a ground fault in a 34.5 kV cable to a 5 MVA field, one of the fuses will clear the fault as fed from the 34.5 bus. This would leave acES with a highly probable ferroresonance condition where the capacitance of the IHV cable tunes with the inductance of the 5 MVA transformer resulting in high transient voltages on the faulted circuit. It is for this reason that a three phase switch has to be incorporated with the 34.5 kV fuses.

Protective Relaying

Protective relaying is necessary to perform the monitoring function that will allow opening of circuit breakers in the event improper conditions exist within the acES. These sensors, which close/open relay circuits provide for checks on overcurrent, single phasing, over voltage, under voltage, and synchronization. Standard utility power engineering conventions have developed numbers for the various types of protection circuits. Specific circuit numbers and a brief description of the protecton these relay circuits provide to the CPS are shown below:

50 - Instantaneous overcurrent relaying - Three phase relaying is used to protect for 5 MVA transformer faults and 2 kV system faults. The relay would be set above the available fault power from the inverter and is therefore inherently directional since it will operate only when high current flow is detected flowing towards the inverter.

It should be noted that this relaying does not detect ground faults on the 2 kV inverter system. This protection is incorporated into the inverter design (see Appendix C, PCU Specificaiton).

46 - Negative Sequence Protection - This relay is intended to detect single phasing due to loss of a single 34.5 kV fuse. The relay would trip the PCU 2000 A, 2 kV breaker to remove PV generation from acES. This permits the voltage sensing single phase detector at the 34.5 kV switch fuse to operate to open the three phase switch.

59 - Zero Sequence Overvoltage Relay

This relay provides 34.5 kV ground fault protection. It is time coordinated with the fuses and trips the 2000 A main breaker.

27 - Three, Single Phase Undervoltage Relays

Since the PV field cannot provide high fault current, undervoltage detection is used to protect against three phase and phase-to-phase faults.

25 - Synchronization Check Relay

This relay prevents out of phase switching or closing with unmatched voltages which may be caused by loss of an auxiliary transformer primary fuse.

MAIN TRANSFORMER PROTECTION

Transformers are protected with conventional differential relaying and sudden pressure relaying.

The 34.5 kV inverse time overcurrent relay (#51) is set to coordinate with the fuses and would provide bus protection. These relays are inherently directional due to the relative fault levels.

The 50/51N ground relay is also inherently directional due to the ground source being on the bus. Hence this relaying can be high speed since it will only see residual current for faults in the 75 MVA transformer 34.5 kV winding and connections to the low side breaker.

UTILITY SYSTEM PROTECTION

The PV contribution to a 115 kV system fault may be considerably less than rated output, particularly during low insolation conditions. The primary relaying for 115 kV protection is located at the APS switchyard which sees the 115 kV system fault contribution.

The proposed simple overcurrent relaying at the APS switchyard is again inherently directional due to the relative fault levels and grounding arrangements. Instantaneous tripping occurs for 115 kV faults and back-up is given to the 51 relays on the main 34.5 kV breaker.

Use of pilot wire differential has been mentioned. However, better sensitivity is achieved using a voltage restrained overcurrent relay. Additionally, 115 kV zero sequence ground relaying is included as a back-up for the transfer trip.

b. Operations Strategy -

Concerning dc operation, a point of warning is necessary. There is no way to de-energize the photovoltaic arrays during daylight hours. There will always be a dc potential somewhere on the system. Extreme caution must be exercised by all in-field personnel.

c. Facility AC Power - Facility ac power is derived from the load side of two PCU inputs to the 34.5 kV bus. (See DWG. 849-PCPS 20001-1). The system consists of the following components:

1. Auxiliary Transformer No. 1 480V-34.5 kVac
2. Auxiliary Transformer No. 2 480V-34.5 kVac
3. Load Center/Motor Control Center A

All loads in the PVCPS 34.5 kV switchyard and operations area (Field Control Building and Warehouse) are fed from this equipment.

2. CABLING

The ac cabling configuration utilized in the design of the PVCPS was specified in the initial design to have kilowatt losses less than one percent. As shown in Table IIB-1 several cable sizes were investigated for the two proposed intermediate bus voltages. At 34.5 KV the smallest cable available that meets the loss requirements is three conductor No. 1/0. If a No. 2 AWG cable could be manufactured at 34.5 KV this would be the most acceptable. An acceptable kilowatt loss at 13.8 KV (15 KV cable insulation class) would require a minimum of No. 2/0 cable.

TABLE IIB-1 ac Collection System Power Loss

General Information

5 MVA Subfield, Total of 20 Subfields

Average Circuit Length, 1361 meters

| Conductor 3-Conductor | 15 KV Loss in KW | 15 KV % Loss | 34.5 KV Loss in KW | 35 KV % Loss |
|---|---|---|---|---|
| #2 | 94.770 | 1.895 | ---- | ---- |
| #1 | 75.465 | 1.509 | ---- | ---- |
| #1/0 | 60.261 | 1.205 | 9.966 | 0.1992 |
| #2/0 | 48.384 | 0.968 | 7.761 | 0.155 |
| #3/0 | 38.673 | 0.774 | 6.201 | 0.124 |
| #4/0 | 30.957 | 0.619 | 4.965 | 0.099 |
| 250 MCM | 26.463 | 0.529 | 4.245 | 0.085 |
| 350 MCM | 19.267 | 0.3853 | 3.09 | 0.062 |

A direct-buried cable installation was chosen instead of overhead pole mount because of array shading considerations. When an individual PCU-to-switchyard feeder configuration was considered, the subfields close to the switchyard would be surrounded by a minimum of four 30-foot tall power poles each with a 4-6 cables per pole spaced at a minimum of 12 feet on an outrigger structure. These figures are based on standard utility practise in design of transmission and distribution lines. It was very apparent that such an overhead scheme would shade parts of the array severely. This resulted in the selection of the direct-buried installation.

To completely justify the choice of direct-buried acES power cable installation, the use of individual cable runs from PCU to switch yard was evaluated versus paralleling of PCU's by teeing together one or several ac feeders. If feeders could be paralleled the number of cables and overhead poles (which results in array shading) could be reduced. The selection of the individual feeder approach was based upon the following points:

- Several 5 MWe subfields would be lost on a cable fault in the parallel case, destroying some of the modularity of PV generaton;
- An increased cable size (and thus cable cost) would result from the parallel approach,
- The size of 34.5 kV three phase fuse would approximately double in size in the parallel case compared to the individual feeder case.
- The grounding transformer would double in size with the parallel approach.

3. Switchgear

The 34.5 kV switchgear consists of a lineup of three phase switch fuses which are used for PCU isolation and fault clearing. The connection of all these switchgear components together constitutes the 34.5 kV intermediate high voltage bus. These three phase fuse switches are equipped with electric operators so that each 5 MWe subfield can be tripped off the 34.5 kV bus electrically or manually.

The 480 volt switchgear consists of a combination of 480 volt circuit breakers and ac magnetic starters. This lineup is fed as a double-ended load center from two 34.5 kV/480 volt auxiliary transformers. The control of this equipment is by manual operation only.

4. Equipment Installation

Electrical equipment installation for the acES system would be accomplished per applicable industry standards (ANSI, ICEA, NEC, etc.) as required.

C. INSTRUMENTATION, CONTROL AND DISPLAY SYSTEM

The ICADS (the area shaded in the block diagram below) consists of the instrumentation, control and display equipment which supply acquisition, recording, storage, and display of key system and subsystem operational data. This equipment also supplies automatic and manual control of the plant parameters required to transmit the solar generated electricity to the APS grid. The ICADS consists of the following elements:

1) Circuit networks capable of conditioning sensor outputs for use by display, control and data recording elements;

2) Interface for the control system to parameters which are used in control algorithms;

3) Data recording system which includes a storage component adequate to record necessary system parameters;

4) Software to program the operation of ICADS;

5) Master control & data computer which controls and monitors CPS operation for interactive operation with minimal supervision;

6) System instrumentation and control panels. These include such items as the display of net megawatts, net MVAR, output voltage, output current, alarm lights for major failures.

The major components included in the ICADS are the master control and display computer, instrumentation to collect I-V data from the source circuits, a central and data computer and data storage. The functional requirements for each component are given below:

Master Control and Display

1) The Master Control and Display computer is located in the CPS central control building. The computer room shall be air conditioned to 20°C and be powered by an uninterruptable power supply with a 5-hour capacity.

2) The control console has the capability to remcve subfields from power conditioning subsystems and disconnect CPS subfields from the switchyard.

3) The display console has the capability to monitor the state of the system and detect abnormal system conditions. Detailed system information shall be obtained by the operator upon request. In addition, all system on-line schematics and power flow diagrams are stored on disk and easily obtained upon request by the operator.

4) The parameters listed in Table IIC-1 are available for display on the C&D panel. The table lists both directly measured and calculated parameters.

5) The utility has the ability to automatically dispatch the PV CPS output. The plant is capable of interfacing with any existing energy management system.

6) Supervisory control of the line section from the plant into the utility grid switchyard is included. The central dispatch center at Saguaro requires an indication readout on the status of the high voltage ac breaker, and alarms on HV substaton equipment.

Table IIC-1. List of Measured and Calculated Data

| | |
|---|---|
| Insolation (W/m2) | Total Daily Insolation Energy (kWh) |
| Windspeed (m/s) | Average Daily Insolation (W/m2) |
| Ambient Air Temperature (°C) | CPS Module Efficiency |
| Source Short Circuit Current (amp) | Total CPS Efficiency |
| Source Open Circuit Voltage (volt) | CPS Daily Energy Output (MWh) |
| CPS Module dc Voltage (volt) | CPS Subfield Daily Energy Output (MWh) |
| CPS Module Current (amp) | |
| CPS Module dc Power (MW) | |
| CPS Subfield dc Energy Supplies (MWh) | |
| CPS Subfield ac Energy Supplied (MWh) | |
| CPS Subfield ac Voltage (volt RMS) | |
| CPS Subfield ac Current (amp RMS) | |
| CPS Subfield ac Real Power (MW) | |
| CPSA Subfield ac Frequency (Hz) | |
| CPS Subfield ac Reactive Power (MVAR) | |
| Total ac Energy Consumed (kWh) | |
| Total ac Real Power Produced (MWh) | |
| Total ac Reactive Power Produced (MWh) | |
| ac Voltage (volt RMS) | |
| ac Current (amp RMS) | |
| ac Frequency (Hz) | |
| Total Array Field Power Available (MW) | |
| Total Array Power Output (MW) | |
| Total CPS Power Output | |

## Instrumentation

Performance of the PV arrays, source circuits, and subfields are measured by taking I-V curves of the unit under test from open circuit to short circuit conditions. When these tests are run, the following data is recorded for each I-V curve.

1) Source circuit
2) Subfield number, date, time of day
3) Insolation (W/m2)
4) Average cell temperature
5) Wind speed (m/s) at mid point of array height
6) Ambient air temperature (°C) near the array
7) I-V plot
8) P-V plot
9) Normalized I-V curve
10) Maximum power, short circuit, and open circuit voltage

Each current voltage curve is normalized to standard reporting conditions of 1000 W/m2 and 28°C average cell temperature.

## Control and Data Computer (CDC)

1) The central control consists of two central processing units (CPU) where one CPU serves as a backup to the other. In the event of a control computer failure, the back up CPU detects a failure of the control computer, issues an audible and visual alarm to the operator and immediately takes over control of the field.

2) The central control and instrumentation computer data processing performs the following:

   a) converts data into engineering units;
   b) monitors event change information;
   c) determines power and energy values;
   d) records commands and status information from the control computer;
   e) monitors switch status information from C&D panel; and
   f) displays selected data on CRT.

3) The CDC has the capability of presenting on the CRT graphs and other messages. Selection is initiated from the CDC computer keyboard by an operator. The CDC has the capability of transmitting any CRT graphics to a printer-plotter.

4) The CDC provides for observing the power flow through the system by displaying upon command the power readings from all power meters in each system and subsystem.

5) Key CPS operating parameters are shown on command along with insolation, average array temperature, ambient temperature, and windspeed.

6) The CDC has the capability to calculate and present inverter, transformer, and CPS efficiencies.

7) Graphical displays provide for easy to read I-V and P-V performance measurements.

8) A graph showing key system voltages on a block diagram of the system is available on demand. Other graphs are provided to show currents, power, energy for the day, and efficiencies.

9) One-line schematic of any CPS module is available to the operator upon command.

Data Storage

Sufficient disk storage capability is provided.

Data Interfaces

The following sections identify the major interfaces between the ICADS and the CPS equipment. Operational data is exchanged between the ICADS and the field components to control the plant. Standardization becomes a key element when building a plant of this size.

1. RS-232C Standard

The RS-232C is a standard published by the Electronic Industries Association (EIA) and titled "Interface Between Data Terminal Equipment and Data Communication Equipment Employing Serial Binary Data Exchange." This standard is widely used in the electronic industry and allows full-duplex communication to a maximum data signalling rate of 20K bps and a nominal maximum distance of 50 feet. This interface applies to all the components specified in the CPS ICADS design standard. One advantage in using the RS-232C standard in the CPS design is that succeeding standards such as RS-449, which has been developed of higher performance and greater flexibility in data transmission, will apply to the current design without modification.

The following sections identify the major interfaces between the ICADS and the equipment which operational data is exchanged to control the plant.

2. PCU Control Interface

The inverter is the basic element of the Power Conditioning Unit (PCU). A serial RS-232C interface at the inverter will be able to transmit and receive formatted serial data to and from the central computer (SEE DWG's 849PCPS3002 and 849PCPS3026). The data provided by the inverter is made up of control, instrumentation and status information (Appendix C, ICADS Spec, paragraphs 3.2.2.4.5 and 3.2.2.5). The inverter can be operated manually or automatically. Manual control is accomplished by an operator at the inverter location. In automatic control, the inverter operates by itself and accepts remote commands from the (ICADS) central computer. Unless otherwise indicated, the term PCU means the inverter plus all external ac instrumentation and control equipment. (DWG 849PCPS2001, sheet 1.)

a. Modem Communication - A modem converts the binary data from the sender into corresponding analog audio signals and transmits it over standard telephone cables (modulation). The receiving modem decodes and converts the incoming analog signals into the original binary data (demodulation).

b. Lightning Protection - A 15 joule device with a 5 ns response time is recommended at the output of each modem (see DWG 849PCPS3002). The lightning protector specified clamps any expected transients at 16 volts (RMS).

c. EMI Protection - Electro-magnetic Interference (EMI) will be minimized by locating all the sensitive field equipment (AFC's and Modems), away from the inverter and switchgear. The recommended location is the middle of the south side of the inverter enclosure (see DWG 849PCPS1128). This location is far enough from the dc and ac runs passing by the PCU. Additional EMI protection will also be provided by the enclosure (see paragraph 3b).

3. acES Control and Instrumentation Interface

This interface is implemented by means of Data Acquisition Unit (DAU) and related circuit cards. The DAU is automatically programmed by the central computer through an IEEE-488 bus. In the proposed configuration the DAU is serving only as a data acquisition system. In the event that control functions are required in the future, there is ample space for control cards for any ac Electrical System (acES) application (Appendix C, ICADS Spec, Figure 3.0). All of the acES instrumentation signals are categorized as either Analog, discrete or pulse counter (Appendix C, ICADS Spec, Table 4.0). The three types of instrumentation signals are taken care of by specific cards listed as option numbers (Appendix C, ICADS Spec, Exhibit A).

a. Analog signals - All of the acES analog signals provide a 0-5 or 0-20 mA dc current representation. Most of these signals emerge from power meters (DWG 8949PCPS2001-1). The current (mA) analog signals are fed into shunt resistors for voltage readings by the DAU.

a) Maximum Input Voltage: less than 170 V peak between any two input terminals.

b) Maximum current: 50 mA per channel non-inductive.

c) Maximum Power: 1 VA per channel.

The multiplexing switches (relays) have the following ratings;

a) Type: low thermal offset dry-reed relays, 3 per channel.

b) Life: $10^7$ operations.

c) Contact Resistance: less than 1 ohm.

b. Discrete Signals - All the discrete signals represent an open or closed switch or a true or false condition (Appendix C, ICADS Spec, Tables 4.0 and 7.0). The DAU monitors all discrete conditions through Isolated digital Input/Interrupt Assemblies, (Appendix C, ICADS Spec, Exhibit A). A few characteristics of the interrupt assembly are the following:

a) Signal levels: 5 Vdc; 12V and 24V jumper selectable.

b) Interrupts: Programmable enabling or disabling of each interrupt line. Multiple interrupts are latched and are dealt with at a computer dependent rate. Response time for an interrupt condition is less than 1 ms.

c. Pulsed Signals - In order to satisfy the needs of the remote Energy Control Center (ECC) in Phoenix, a remote terminal unit (RTU) must be supplied by the utility company (Appendix C, ICADS Spec, Figure 3.0). The remote terminal unit interfaces with ICADS by providing pulsed signals to the data acquisition unit. (Appendix C, ICADS Spec, Exhibit A.) The RTU provides a non-repeatable pulse to represent a one MW increment or decrement. There is either phone or radio communication between ECC and Saguaro. Two reciprocal counter cards are provided to process the RTU output. The RTU output is sent by means of two separate (positive logic) channels. The reciprocal counter cards interfacing with those channels are capable of the following:

a) Maximum Input Frequency: 100 KHz

b) Minimum On Time: 5 s

c) Minimum Off Time: 5 s

d) Programmable Edge Triggering: to values shown above

e) True Logic: Negative as standard or jumper selectable positive.

f) Input Level Range: 5V standard, 12/24 V jumper selectable.

4. Weather Instrumentation

A weather tower located at the roof of the Field Instrumentation Building contains the minimum weather instrumentation required for the 100 MW PV CPS (DWG 849PCPS3026). The majority of the signal outputs from the weather instrumentation are of the analog type. The only discrete signal is the "rain indication" (Appendix C, Table 4.0).

5. ICADS Computer Equipment

The Instrumentation Control and Display System (ICADS) should be built around a computer system that gathers, manipulates, calculates and controls data to and from the CPS system. Some of the primary requirements to be met by the computer equipment are (Appendix C, ICADS Specs, paragraph 3.2.1 and 3.2.2):

a) Memory Word Size: 16 bits (recommended)

b) Memory Size: 512 KB minimum

c) Lines of Communication: 64 minimum

d) Storage: 21 MB as a minimum of disk storage and accomodations for magnetic tape drives.

6. Software

The software requirement for the ICADS will be met by subroutines which must be developed during actual design of the CPS (Appendix C, ICADS Spec, paragraphs 3.4-3.4.8). Two of the basic provisions foreseen by the software on ICADS equipment are real-time and multiple-function interaction. These will allow system operation as events occur, without diverting the total computer attention to a single task. The configured system is as general and, at the same time, as complete as possible. Software houses were approached and as a result all the software foundation was configured to allow future merging with general power and process plant programs.

a. Computer Compiler and Graphics 1000-II - Due to the number of calculations and amount of data management required, FORTRAN programming is recommended. Consequently, there must be a translator program that controls and allows the high-level-language to binary code transformation. This translator is the compiler. The software compiler is of the Fortran 77 type. Some of its outstanding features are:

a) Implementation of the latest American National Standards Institute (ANSI) 77 for FORTRAN programming.

b) Full ANSI 66 compatibility

c) Supports variables and arrays using up to 128 MB of virtual storage.

d) System programming extensions.

e) Transparent access to remote files in a distributed system network.

f) Compatibility with other software subsystems such as Graphics/1000-II, DS/1000-IV, Image/1000 and DATACAP/1000.

b. Graphic Terminals Software - The graphic needs of ICADS were to supply a modern and flexible control and display system. Additionally, all graphic, terminals have the power to handle complex applications; communicate easily with the CC and send information to other intelligent peripherals such as a printer plotter or a storage system. The three 8-color terminals (Appendix C, ICADS Spec,) specified on ICADS possess all that is required.

D. PLANT FACILITIES AND SERVICES (PFAS)

The facilities and services( shaded in the block diagram) required to support operation of the PV CPS are discussed below. The PFAS includes fire protection, service water supply and sewage water treatment, facility ac power, intra-plant communications, array washing, plant security, access, and the necessary structures and enclosures to house the PV CPS. General specifications for the major enclosures, plant security and utility subsystems appear in Appendix C.

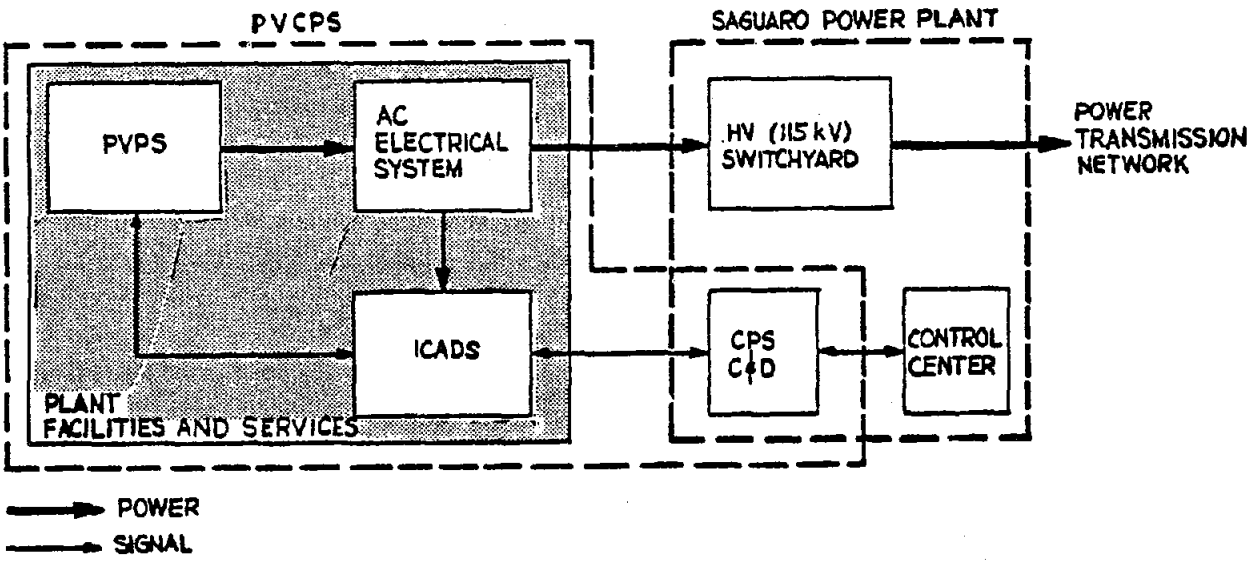


Figure IID-1 System Block Diagram

1. Services and Utilities

a. Fire Protection

i. Background - The fire protection analysis is based on the philosophy of providing the best protection to all areas at the least cost. All recommended fire protection for this installation complies with the latest applicable National Fire Protection Association (NFPA) Standards.

ii. General - As the nearest water main is about one and one-half (1 1/2) miles from the Saguaro plant for this reference design, fire protection was evaluated based on a protection system which utilized water available from wells located on site. Even though there are electrical components involved, water can be extremely effective in providing the majority of the fire protection at a CPS installation.

For situations such as weed fires, warehouse fires, or fires in HVAC rooms, a storage tank under some minimal pressure would provide sufficient pressure and water to operate a fire hose. Fires outside the utility building could be handled by a small self-contained water tank and pump which was skid mounted for deployment using a pickup or other mobile device.

iii. Photovoltaic Field - As there is little in the way of combustibles in the field area, the only requirement for fire protection is that operating personnel have a 10 pound portable $CO_2$ fire extinguisher available on their vehicle. This permits manual extinguishment in the event of fire occurring during routine maintenance checks or as a result of maintenance work being performed.

Each inverter area should be supplied with a 15 pound portable $CO_2$ fire extinguisher mounted in a conspicuous and accessible location. Synthetic insulating fluid (silicone) is used in the transformers to minimize the fire potential.

As direct-buried armored cable is used throughout the field area, cable fire hazard problems are not anticipated. However, where the cable enters the control building, those floor and foundation penetrations are sealed with RTV silicone foam or another suitable method to provide a firestop at these penetrations.

iv. Operations Area

Field Control Building - Since the control room is essential to plant operation, an automatic Total Flooding Halon 1301 system should be provided. Activation of the Halon system is both by cross-zone ionization/photoelectric (smoke) detectors and a manual pull station. All alarms are both local (throughout the building) and also located at the main Saguaro Control Room.

A small multi-zone control panel is located in this room and arranged to receive all fire and system trouble signals on a per-zone basis for all detection systems at other locations.

Additionally, 9 pound Halon 1211 portable fire extinguishers would be located strategically throughout the building.

The battery room, while not requiring fire protection, should be equipped with an emergency eyewash/shower for use in the event of acid burn injuries. Additionally, this room contains hydrogen gas detectors arranged to alarm personnel and to shut down battery charging. The electrical cable throughout this building is of IEEE 383 design. This type of cable is the most fire resistant type on the market. While the voltages associated with this building's cable are low, minimization of combustible fire loading is recommended.

Warehouse - Because of the lack of nearby water supply and to reduce the cost for fire protection, APS should establish operating procedures which would have all combustible packing removed prior to storage in the building. This eliminates the need for sprinklers. Small quantities of combustible-type cartons could be stored in the building. For this reason, as a minimum, a smoke detection system is installed. Local alarm is provided with a remote signal going to the Field Control Building.

Twenty pound multi-purpose dry chemical extinguishers are provided throughout the building. One is located at each doorway as well as two additional ones located along aisleways inside the building.

Switchgear - The outdoor switchgear and 115 Vac transformer do not require any special fixed type system fire protection. If mineral oil is used, a 50 pound, wheeled, dry chemical fire extinguisher should be provided. Otherwise, a 20 pound $CO_2$ extinguisher is needed.

Visitor's Center - The Uniform Building Code's occupancy classification for this building is Group A, Division 3. No sprinkler protection is required. However, 10 pound multi-purpose dry chemical fire extinguishers are recommended. Photoelectric smoke detectors arranged for "alarm only" are provided. Annunciation of this system is local and remote.

b. Sewage Treatment - The operation of a septic tank system is best described in this excerpt from the U.S. Public Health Service "Manual of Septic Tank Practice":

"Untreated liquid wastes (sewage) will quickly clog all but the most porous gravel formations. The tank conditions sewage so that it may be more readily percolated into the subsoil of the ground. Thus, the most important function of a septic tank is to provide protection for the absorption ability of the subsoil. Three functions take place within the tank to provide this protection.

1) Removal of Solids - Clogging of soil with tank effluent varies directly with the amount of suspended solids in the liquid. As sewage from a building sewer enters a septic tank, its rate of flow is reduced so that larger solids sink to the bottom or rise to the surface. These solids are retained in the tank, and the clarified effluent is discharged.

2) Biological Treatment - Solids and liquid in the tank are subjected to decomposition by bacterial and natural processes. Bacteria present are of a variety called anaerobic which thrive in the absence of free oxygen. This decomposition or treatment of sewage under anaerobic conditions is termed "septic," hence the name of the tank. Sewage which as been subjected to such treatment causes less clogging than untreated sewage containing the same amount of suspended solids.

3) Sludge and Scum Storage - Sludge is an accumulation of solids at the bottom of the tank, while scum is a partially submerged mat of floating solids that may form at the surface of the fluid in the tank. Sludge, and scum to a lesser degree, will be digested and compacted into a smaller volume. However, no matter how efficient the process is a residual of inert solid material will remain. Space must be provided in the tank to store this residue during the interval between cleanings; otherwise, sludge and scum will eventually be scoured from the tank and may clog the disposal field.

If adequately design, constructed, maintained and operated, septic tanks are effective in accomplishing their purpose."

Design sheets detailing assumption and equipment employed appear in Appendix C, "Septic Tank and Seepage Field Design Data."

c. Water Treatment - All water for plant usage would originate from three deep-wells. Pumping depths from the No. 1, No. 2 and No. 3 wells are 180 m, 180 m and 189 m, respectively.

The combined output for the three wells for 1981 was 600,708,000 gallons. The primary usage is for makeup to the circulating water system, which in conjunction with two cooling towers provides cooling for the steam condensers, and boiler water makeup provided by a double chain demineralizer.

Table IID-1 Typical Well Analyses

| | No. 1 | No. 2 | No. 3 |
|---|---|---|---|
| Alkalinity as $CaCO_3$ | 126 mg/L | 128 mg/L | 120 mg/L |
| Aluminum | nil | nil | nil |
| Arsenic | nil | nil | nil |
| Bicarbonate | 154 | 156 | 146 |
| Boron | nil | nil | nil |
| Cadmium | nil | nil | nil |
| Calcium | 33 | 27 | 28 |
| Carbonate | 0 | 0 | 0 |
| Chloride | 14 | 14 | 14 |
| Chromium VI | nil | nil | nil |
| C.O.D. | nil | nil | nil |
| Copper | nil | nil | nil |
| Cyanide | nil | nil | nil |
| Fluoride | 0.5 | 0.4 | 0.4 |
| Iron, Total | 0.06 | nil | nil |
| Lead | nil | nil | nil |
| Magnesium | 3.5 | 3.2 | 3.5 |
| Manganese | nil | nil | nil |
| Mercury | nil | nil | nil |
| Nickel | nil | nil | nil |
| Nitrate, as N. | 0.9 | 1.1 | 1.3 |
| Phenols | nil | nil | nil |
| Potassium | 2.3 mg/L | 2.3 mg/L | 2.1 mg/L |
| Selenium | nil | nil | nil |
| Silver | nil | nil | nil |
| Sodium | 38 | 41 | 41 |
| Sulfate | 30 | 34 | 38 |
| T.D.S. @ 180oC 190 | 220 | 220 | |
| Total Hardness | 97 | 81 | 84 |
| Zinc | nil | nil | nil |
| pH | 7.8 | 7.7 | 8.1 |

Based on the foregoing well water analysis, it was determined that no water treatment is required. The existing water chemistry is judged to be satisfactory, as is, for the PV wash water. Through the water is somewhat hard, it was determined that it should not cause scaling to any significant degree.

In the event that wash water quality requirements should change, sufficient space will be allowed in the warehouse for possible future water treating and space for a demineralized water tank beside that building.

The water will be delivered to a new raw water storage tank beside the warehouse through a 0.1 m pipe line from the existing elevated raw water storage tank.

A tank allowing two and one half days storage is anticipated. The tank is 6.4 m in diameter and 4.9 m high and rests on a concrete ringwall foundation. The tank will be field erected and constructed of ASTM A283 Grade B or C carbon steel.

Design sheets detailing the wash water supply system configuration appear in Appendix C. "Array Wash Water Supply System".

d. Array Aperture Washing Concept - The array washing concept was developed in response to the decision requirements for periodic restoration of clean aperture array power output. Several models of power output degradation due to soiling have been developed for both heliostats and PV arrays. However, recent experience with actual installations has revealed that soiling is not nearly as severe a problem as has been assumed. For example, the heliostats at the CRTF in Albuquerque have been washed only a few times in the four year existence of CRTF. For the design of the wash concept for the PV CPS we have, nonetheless, assumed rather worse-case soiling scenarios so as not to underestimate the extent of soiling effects upon plant power output. The array parameters and washing assumptions used in the analysis are shown in Table IID-2.

Table IID-2. Array Washing Concept Assumptions

| | |
|---|---|
| Array aperture | 794,000m2 |
| Power degradation requiring wash | 0.10 from "clean" nominal |
| Daily Power Degradation | -0.002 (% of rated capacity/day |
| Wash water purity | 220 ppm TDS |
| Wash water consumption | 450 m2 aperture/m3 wash water |
| Wash rate (including set-up) | 18 m2 aperture/min. |

The very conservative array washing plan is described below. Natural cleaning effects are neglected. A scheduled washing system is assumed; however, further analysis may show that a responsive system is preferred (i.e., one that responds to natural cleaning events).

The arrays should be washed with untreated well water which is not collected for reuse. Arrays should be washed by a hot pressurized spray on board a diesel-powered, 5-ton, flatbed truck (three required). Spray nozzle will be located on the end of a hydraulic boom. Truck tank size will be 1.5 m in diameter and 2.64 m long constructed of either stainless steel or fiberglass with a gel-coat finish on the interior. A 0.5hp centrifugal pump will be required for spray activation.

Information from Martin Marietta's Saudi Arabian 350 kW photovoltaic installation (SOLERAS) indicates that 450 $m^2$ of array aperture can be washed per cubic meter of wash water. If each square meter of aperture is washed every 50 days which corresponds to washing when nominal power output degrades 10%, and 18 square meters of aperture can be washed per minute, then a total array wash by three trucks refilling four times a day requires 30 days using a 7-hour effective work days.

Adequate wash water storage was calculated for the 35,000 gpd water usage rate during the washing period. It was assumed that existing well capacity was available for this concept.

2. Security and Access

An 2.4 m (10 feet) high chain link fence is provided around the perimeter of the site. The fence provides plant security and prevents intrusion of large wildlife, tumbleweeds, etc. A lockable sliding gate at the main entrance permits controlled vehicular access to the site. Both the fence and gate are of standard construction.

Within the PV site, fencing also encloses the switchyard area to prevent entry of unauthorized personnel into that restricted area.

A 7.3 m wide paved entrance road provides access to the PV field from the frontage road and/or from the existing Saguaro Plant. The layout shown on the plot plan DWG 849PCPS0126-1 allows construction traffic to enter the field directly without interfering with the existing Saguaro Power Plant. This arrangement is desirable from a labor relations standpoint. The entrance road also provides public access to the visitors center located a short distance from the public frontage road.

The roads within the PV site provide for nominal operating, maintenance and security vehicular traffic and are also capable of supporting heavy construction traffic. They are unpaved, but are constructed of one inch aggregate base coarse material placed on compacted in-place subgrade. A typical road cross section is depicted in Section A, DWG849PCPS4041. Road widths vary throughout the site as shown on the Field Layout Plan DWG849PCPS1226. The perimeter roads are shown to be 16.5 meters wide measured from the fence line to the array structure or clearance line. As shown in Section A, DWG849PCPS4041, this includes a 2.3 m road with 4.6 m shoulders on each side. The total 16.5 m width is designed to accommodate the turning radius requirements of the trucks delivering PV field components. The 11.9 m center north-south road width is also based on truck turning requirements. Within the PV field, roadways separating the 5 MW subfields are 7.3 m wide; being made up of 3.6 m roads and 2.3 m shoulders a shown in Section B, DWG849PCPS4041. The roadways providing access to the inverters located near the center of each 5 MW subfield are approximately 10.7 m wide. This precludes shading of the arrays north of the road and provides for a 3.9 m passage past the 6.7 m transformer collection basin.

Access ways within the subfields are provided between the arrays to preclude shading and permit vehicular access. These do not require aggregate surfacing but only receive the general field leveling and smoothing with perhaps some in-place compaction accomplished by several passes of a vibratory roller. The expense of furnishing imported surfacing for these aisleways is not warranted due to the low traffic frequency.

4. Structures and Enclosures

a. Visitors Center - A Visitors Center area consisting of a visitors building and parking area is located along the plant entrance road near the frontage road.

The building as shown in DWG849PCPS4034 is provided to house display and audio visual presentations and allow public viewing of the PV field from a roof walkway.

The building is constructed using concrete block. The floor is a concrete slab on grade and the building is supported on reinforced concrete spread footings. A 156 square meter display area, 96 square meter office area, public restrooms, and an HVAC room are provided. The building incorporates passive solar design by orienting glazing to the south and earth berms along the other extension walls. A roof overhand reduces solar gain in the summer months.

The Visitors Center area is landscaped and provides paved parking for 20-30 vehicles.

b. O&M Warehouse - A building is provided for housing of operation and maintenance equipment and for warehousing of spare parts. It is a prefabricated rigid frame (clear span) building having overall dimensions of 27.4 m x 44.7 m with a 4.9 m eave height. The prefabricated metal framed construction is the most economical for this site building. The floor is a concrete slab on grade and the building is supported on reinforced concrete spread footings.

The majority of the building is open as shown in DWG849PCPS4032 but a 3 meter square office and a restroom are located in the northeast corner of the building. In addition, a 3.6 m x 6.1 m area is reserved for water treating equipment if demineralized water is found to be required for array washing.

A 3.6 m x 4.3 m rollup door and a 2'6" x 6'8" man door are provided in each endwall of the building. Although an internal bridge crane or monorail system is not provided, the building specifications require that the building roof members be capable of accommodating a light duty, portable, chain-hoist assembly.

The building, which is furnished with insulated metal roofing and siding, is to be ventilated. The office area is air conditioned.

c. PV Field Control Building - A central building is furnished at the south entrance of the PV field to house the central display, control and data acquisition equipment related to the CPS and its control interfaces with the existing facility.

The building is shown on DWG849PCPS4031 and is concrete block construction with overall plan dimensions of 9.6 m x 16.1 m. Concrete block is commonly used in the area and has been shown to be economical for this size and type of building.

The control room is located in the northeast corner of the building to provide visibility to the field. The computer room is located adjacent to the control room to the south. Both rooms are environmentally controlled and have a computer floor to allow cable entry into the CCE from below.

In addition to the above rooms, the building contains a battery room, electronics shop, office, lunchroom, toilet, janitors closet, and an HVAC room.

d. Main Station Control Room Addition - An addition to the existing Saguaro Main Station Control Room is provided to have PV control and data acquisition equipment related to the control interfaces within the existing utility.

DWG849PCPS4031 shows this addition in relation to the existing control room. APS has advised that the central receiver repowering project will also require a control room addition. If the repowering project were to materialize prior to PV construction, the "new addition" for the PV would merely move to the east and would still interface with an "existing" building which would then be the repowering control room. In either event, layout and construction costs for the PV addition itself would be similar. If the building is relocated further to the east than shown due to the repowering addition then some additional costs would be incurred in that an existing road, a power line and some buried utilities would require relocation.

The control room addition measures 4.9 m x 12.4 m and matches existing construction (i.e., steel frame and concrete block). The addition provides three levels; ground floor, cable room, and control room as shown in the south elevation. The existing building HVAC is supplemented as required.

## III. DESIGN STUDIES AND TRADE-OFF ANALYSES

This section addresses the major plant design issues and presents analyses, comparisons and trade studies performed to resolve those issues. The purpose of the trade studies was to maximize plant performance, reliability and maintainability, constrained by achieving minimum plant life-cycle cost. In most design cases, this objective can be obtained by evaluating first costs and the value of associated energy losses a methodology similar to the one employed by Bechtel11. This technique involves calculating the value of energy losses, V, from $V = (100/n - 1)\ Co$ where, n = annual energy efficiency (%), Co = assumed area-related costs ($/Wp). The amount, V, can be compared to additional first costs incurred to increase n. The optimum configuration results in a minimum of first costs plus V. This methodology was employed in several trade studies described below. When it resulted in marginal comparisons, the utility-accepted present worth of required revenue (PWRR) methodology was employed.

### A. SITE SELECTION

Two areas were available for selection as the site for the array field. Each is described and compared below (refer to drawing No. 849PCPS0126-1).

Site I. The first layout is North of the existing plant occupying most of Section 2 and 3 and portions of Sections 1, 4, 10 and 11, all presently State of Arizona land. The proposed Central Arizona Project (CAP) Tucson aqueduct would border the plant on the East and North.

Site II. The second location is Southwest and across the interstate highway from the existing plant. It would occupy portions of Sections 20, 22, 23, 26, 27, 28, 35, and 36, all presently State of Arizona land. Interstate 10 would border the plant on the East and the existing Marana Air Park would be to the South of the field.

<u>The following considerations clearly indicate a preference for Site I by characteristic comparison to Site II.</u>

<u>Access:</u>

Operations: Site I. Readily accessible from existing plant, would only require a 610 m road from existing north fence.

Site II. Unless a bridge across Interstate-10 is constructed, a 5 mile drive would be required to get to the site from the existing plant. It is estimated that a bridge would cost approximately $5,000,000.00 to install.

Construction: Sites I and II are both easily accessible from existing frontage roads.

Rail: Site I. Accessible from existing siding.

Site II. Interstate-10 separates the railroad from the proposed PV Plant Site.

Transmission Line to 115 kV Switchyard:

Site I. Requires routing transmission line around existing plant (approximately 1524 m length of line).

Site II. Requires routing transmission line across Interstate-10, frontage road and railroad (approximately 1219 m length of line).

Utilities (Water):

Domestic: Site I. Pipe from existing well supplied system.

Site II. Piping from existing well supplied system would require crossing under railroad and interstate highway

Array Washing:

Site I. Demineralized water is available at existing plant.

Site II. Would require further travel distance to existing plant demineralized water supply unless a bridge were to be built over Interstate-10.

Site Preparation:

Site I. The area slopes upward to the East at the rate of ±1%. The area generally contains 1.5 high brush at approximately 15 m centers, some small trees, a few Saguaro cacti, and natural washes. The proposed CAP Tucson Aqueduct, as presently planned, will intercept the drainage from the East with a dike and will channel the runoff across the aqueduct in an overchute structure. Stearns-Rogers proposes that this flow be directed around the field along the north side by means of a 4,877 m long earthen channel and dike. The site will require clearing and grubbing to remove the vegetation and some grading to fill existing washes and cattle watering ponds. In general, the field will not require leveling or compaction.

Site II. The area slopes upward to the East at a rate of ±1/2%. It appears that the area has slightly less vegetation than Site I. Offsite drainage from the east approaches the site through 7 culverts under Interstate-10 spaced at about 1/2 mile intervals. This runoff should be diverted around the field to the North and West by means of a channel/dike which would need to be approximately 6,096 m in length. The

flatter grades in this area will make this system more difficult to design and require much wider channels since the water will have a tendency to stand in the channel rather than flow because of the small existing elevation differences. The clearing and grading effort at the location would be somewhat less than for Site I. As in Site I, grading within the field will be minimal. It is estimated that the extra 1,219 meters of canal required for Site II would cost approximately $200,000.00.

Land Procurement:

As previously mentioned, both areas are shown to be State Surface Trust Lands. Portions of each are presently used for grazing. It was assumed that each site was equally available.

Aircraft Interference:

Site I. The field would be located 3 miles north of Marana Air Park and does not appear to be directly in line with any of the existing runways.

Site II. The field would be located within a mile of the existing Marana Air Park and would be closer to the runway. There is a possibility of FAA regulation complications.

Miscellaneous Considerations:

For the purpose of this evaluation, several items normally considered in plant siting are assumed to be similar for both proposed sites. For example: soil type, insolation, temperature, wind, rain, snow, labor, etc.

B. PHOTOVOLTAIC ARRAY

Several trade-offs were required during the course of the design of the Photovoltaic Power System (PVPS). The ones specific to the PV array are as follows:

1) Sizing of the array output to match the PCU capabilities.

2) Determination of the optimum array field layout.

3) Evaluation of the optimum module to module cable size.

4) Determination of feasible array grounding/lightning protection.

1. Array Sizing

Once the 5 MWe modular subfield size was chosen the task of sizing the photovoltaic array became one of computing the number of array assemblies which would supply a maximum dc power of 5 MWe accounting for the total dc system and inverter full-load power losses under a particular set of insolation and meteorological conditions which characterize the Saguaro site. Developing this performance "match"

between array and PCU, array performance was calculated utilizing the SOLMET-TMY data base of Phoenix and arriving at an array size which limited PCU input to 5.18 MW. This technique was described in Section IIA-1c. Trade-off analysis during the sizing exercise focused upon the magnitude of the allowable annual energy losses due to array power exceeding the PCU power handling capabilities (i.e., rating).

It was determined that a utility-owned PV CPS should be designed to transmit 100% of the available array power (minus system losses) during operation. This reflects the desire to maximize the power output from the plant at minimum cost. Since PCU costs, as a fraction of total plant cost, are much smaller than the array cost, slightly oversizing the PCU power-handling capability compared to array output is most cost-effective.

The sizing exercise utilized dc power collection efficiency and PCU efficiency estimates that were somewhat lower than those realized in final design analyses. This resulted in a slightly (1.4%) oversized array field. It appears that future array sizing analysis could take advantage of more accurate initial dc system loss estimates and therefore require less photovoltaic panels than has been utilized for this design.

2. Array Field Layout

The importance of minimizing dc, ac and signal cabling costs strongly influences the development of a nominal array field layout. The purpose of the following trade study was to determine a cost-effective row-to-row spacing (see DWG 849PCPS1127).

The trade-off between array energy loss due to shading and field cable cost (i.e., pedestal spacing) was an implied problem that was not traceable within the scope of this contract. This was due to the complexity of the array electrical model needed to determine annual array energy loss as a function of array row spacing. This model must account for the temporary shading pattern on the panels, the effect of shading on module performance and the electrical configuration of the array assembly (i.e., location of bypass diodes, module series/parallel wiring, etc.).

The shading problem was approached in this study by establishing the following criteria:

a) Shading was not allowed on any part of an array assembly one and one-half hours after sunrise and before sunset;

b) Conditions around the winter solstice determined worst-case shading;

c) The minimum spacing consistent with a) above ascertains the nominal row spacing.

The justification of these criteria has been based on Martin Marietta's experience with the design, construction and operation of the 350 kW SOLERAS PVPS in Saudi Arabia. Criteria (a) was shown to reflect consideration of the minimum array power required to turn-on the PCU (i.e., 5% of rated power) which occurs approximately one hour after sunrise and before sunset. Some energy loss will occur due to shading under these conditions but its affect was estimated to be much less than 1% of annual plant output.

The array shading subroutine "SHADE" within SIM (Solar Irradiance Model) was utilized to develop solar attitude (azimuth and elevation) and array assembly shading curves. The interpretation of these curves on the winter solstice indicated that a nominal 20 feet row-to-row spacing does satisfy the criteria outlined above. This data also confirms the rule-of-thumb equation that is commonly used which states that row spacing should at least equal to 2.5 times the slope height.

3. Module Construction

This section presents the design studies which evaluate concentrator module construction requirements.

Module construction must provide sufficient reliability and durability characteristics to ensure proper performance over the 30 year design lifetime. Critical issues to be addressed include module dielectric strength and environmental endurance.

In order to assure a capability of working at the $\pm$ 1000 volt system voltage, modules should be designed and hy-pot tested. Module components should be specified so as to withstand an applied voltage of 4200 V (2 times maximum expected system voltage of 1600 V + 1000 V). There is a problem of predicting module dielectric strength analytically, since contamination and random material defects play a major role in determining the actual voltage at which breakdown occurs. Good module design should account for defects by minimizing their occurrence or by using multiple layers of electrical insulation to reduce voltage stress. Module construction should provide adequate protection of the solar cells in an exposed environment (hail, rain, sand and dust, UV radiation) while maintaining structural integrity, when subjected to wind loading.

4. Intermodule Cabling

A cost trade-off was performed on the intermodule cabling configuration. The choice of #10 AWG, single conductor, 2 kV cable resulted from consideration of first costs and the value of associated energy losses for a source circuit at nominal (i.e., 800 W/m$^2$, 71$^o$ cell temperature) conditions. Area related costs were assumed to be \$1/Wp, \$2/Wp and \$3.5/Wp. Wire resistivities were temperature corrected to 60$^o$C and a total wire length of 219 m per source circuit was assumed (i.e., 5 arrays x 41 m between modules plus 14 m to the

junction box). Richardson Catalog cost data were used for cable costs. The results of the trade-off analysis are shown in Table IIIB-1. This table gives the power losses resulting from the use of each particular cable size plus the resulting total $/Wp cost for various area-related cost assumptions.

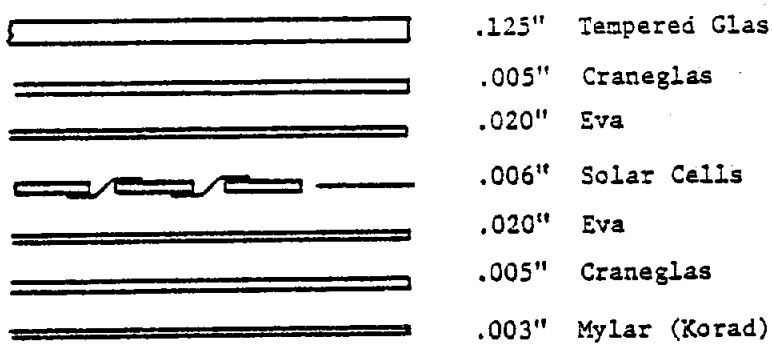


*Figure III B-1 Cross Sectional View of Flat Plate Module*

Table IIIB-1. Intermodule Cable Trade-Off

Power Losses @ Nominal Conditions:

| | |
|---|---|
| #8 | 0.21% |
| #10 | 0.33% |
| #12 | 0.52% |

Total $/Wp Costs

| Cable Size AWG | Ca ($/Wp) 1 | 2 | 3.5 |
|---|---|---|---|
| 8 | 0.0181 | 0.0202 | 0.0234 |
| 10 | 0.0143 | 0.0176 | 0.0226 |
| 12 | 0.0144 | 0.0197 | 0.0274 |

Since it was envisioned that area-related costs are certainly closer to $2-3.5/Wp for near-term PV arrays (i.e., 1986 technology), the obvious choice for intermodule cable, from Table IIIB-1, is the #10 AWG cable.

3. Photovoltaic Structure

A module wind loading analysis was necessary to verify the structural strength of key components such as the glass superstrate and panel side supports. The analysis assumes that 4' x 4' flat plate modules are mounted on the Bechtel-design support structure. Design loads corresponding to a wind speed of 90 mph were used in the analysis.

These analyses indicate that:

- A net moment due to wind of nearly 4800 in-lbs. (542 Nm) exists about the torque tube longitudinal axis,
- Panel side supports bear a 13000 psi (90 mph) wind only bending stress with 26000 psi allowable,
- The torque tube bears a 26000 psi (90 mph) wind only bending stress with 30000 psi allowable,
- The module glazing should utilize fully-tempered glass (0.125") to insure a safety factor of 3.8 on allowable bending stress.

BECHTEL'S STATIC FLAT PLATE PHOTOVOLTAIC STRUCTURE, WIND LOADS

REFERENCE: Wind Forces on Structures
Transactions of the American Society of Civil Engineers
Volume 126, Part 2, Paper Number 3269, 1961
Pages 1139, 1142, 1144

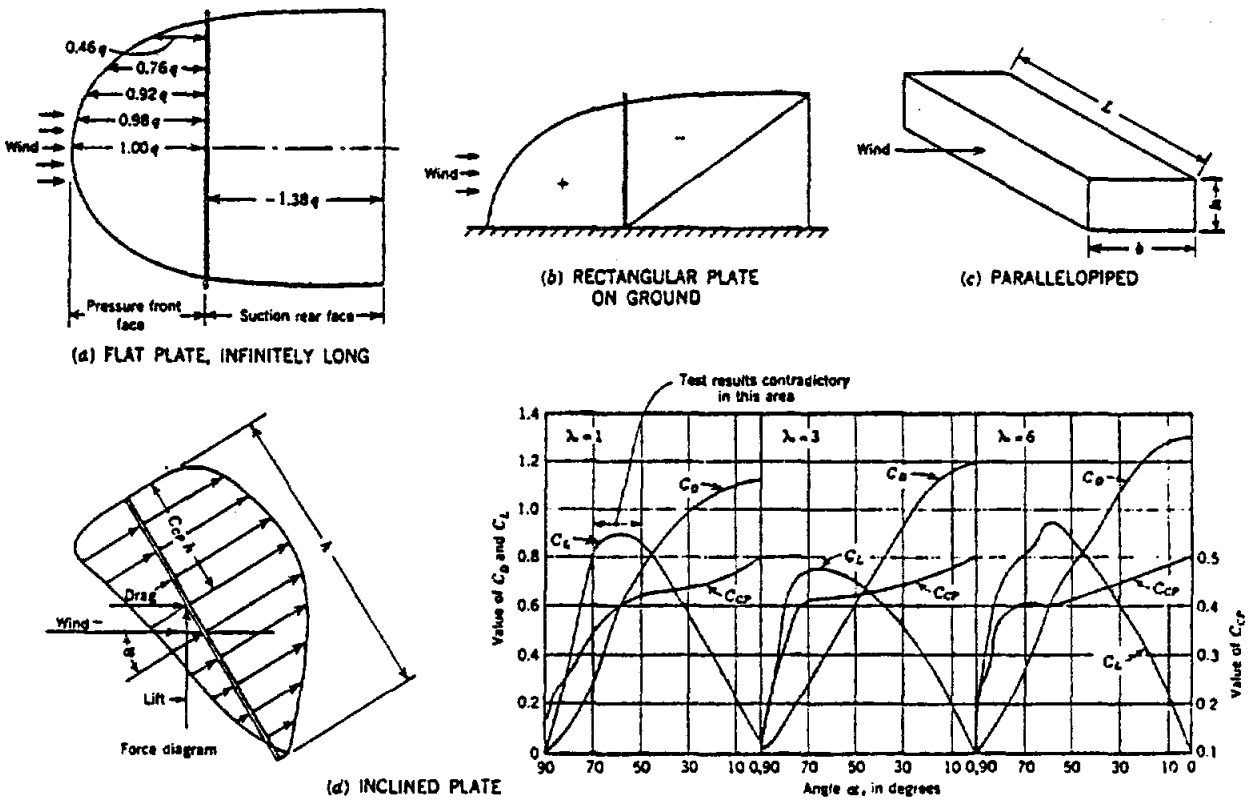


FIG. 5.—WIND PRESSURES ON ELEMENTARY BODIES

$C_{CP}$ = Coefficient of Center of Pressure

$C_L$ = Coefficient of Lift

$C_D$ = Coefficient of Drag

$C_N$ = Coefficient Normal to Surface = $C_L \sin \alpha + C_D \cos \alpha$

q = Dynamic Pressure = 20.73 PSF @ 90 mph

α = Angle of Attack

$P_y$ = Velocity at Height Factor = $\left[\left[\frac{H}{360 \text{ in}}\right] 0.15\right]^2$

λ = Aspect Ratio = L/h

$P_N$ = Total Pressure = q A $C_N$

## BECHTEL'S STATIC FLAT PLATE PHOTOVOLTAIC STRUCTURE, WIND LOADS

Approximated Force Diagram

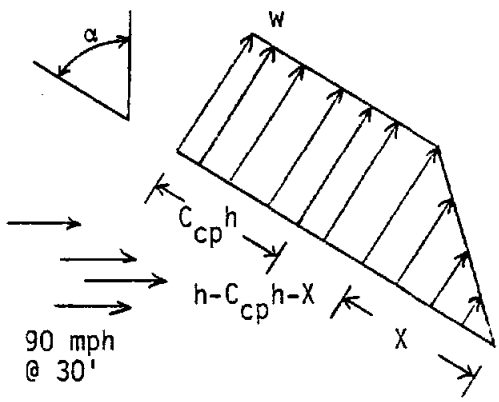


### Method of Evaluating Pressure Distribution

1) Determine angle of attack, $\alpha$

   aspect ratio, $\lambda = L/h$

   Center of Pressure, $C_{cp}$

   Lift, $C_L$

   Drag, $C_D$

   Normal, $C_N = C_L \text{ Sin} + C_D \text{ Cos } \alpha$

   Total Pressure, $P_N = q\ A\ C_N$

2) Use summation of moments about $C_{cp}h$ equal to zero to determine X and w

$$X = \tfrac{1}{2} \quad 3h(1-C_{cp}) - \sqrt{(3h(1-C_{cp}))^2-(1-2C_{cp})}$$

$$w = \frac{P_N}{1-X/2}$$

3) Distribute w at convenient intervals and multiply by the velocity at height factor to determine the final distribution.

$$wi = w\ P_{\upsilon}$$

## BECHTEL'S STATIC FLAT PLATE PHOTOVOLTAIC STRUCTURE, WIND LOADS

90 mph wind @ 30 ft., 4 foot module width, $\alpha = 57.5^{o}$; $\lambda \approx 6.0$

$C_{cp} = 0.40$, $C_L = 0.94$, $C_D = 0.64$, $C_N = 1.14$, $P_N = 756.516$

$X = 42.41$ in., $W = 10.11$ lb/in

Height at one foot intervals determined by geometry

Example: at upper end

$$P_v W = \left[\frac{74.8''}{360''}\right]^{0.30} X 10.11 \text{ lb/in} = 6.31 \text{ lb/in}$$

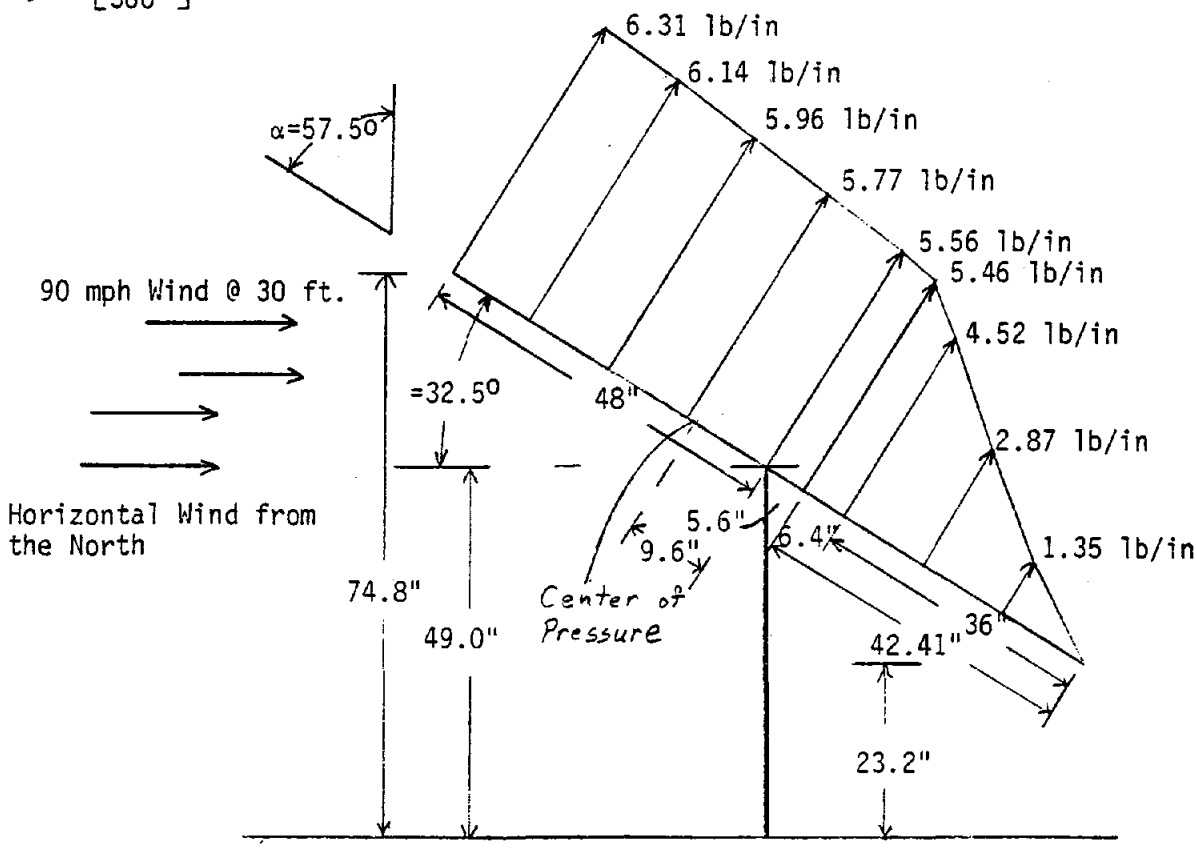


Final Pressure Distribution at One Foot Intervals

| | | | | |
|---|---|---|---|---|
| Totals: | Pressure on Upper Module | (4' x 4') | = | 285.8 lb |
| | Pressure on Lower Module | (4' x 4') | = | 140.6 lb |
| | TOTAL PRESSURE | (4' x 8') | = | 426.4 lb |

Center Moments

| | | | | |
|---|---|---|---|---|
| | Moment from Upper Module | (4' x 4') | = | 7003 in.lb |
| | Moment from Lower Module | (4' x 4') | = | 2210 in.lb |
| | NET MOMENT | (4' x 8') | = | 4793 in.lb |

BECHTEL'S STATIC FLAT PLATE PHOTOVOLTAIC STRUCTURE, WIND LOADS

FLAT PLATE STRESSES: Edges simply supported

$q_1$ = 0.015 psi, Total Pressure = 285.8 lb.

$q_2$ = 0.117 psi, use t = 0.125 in.

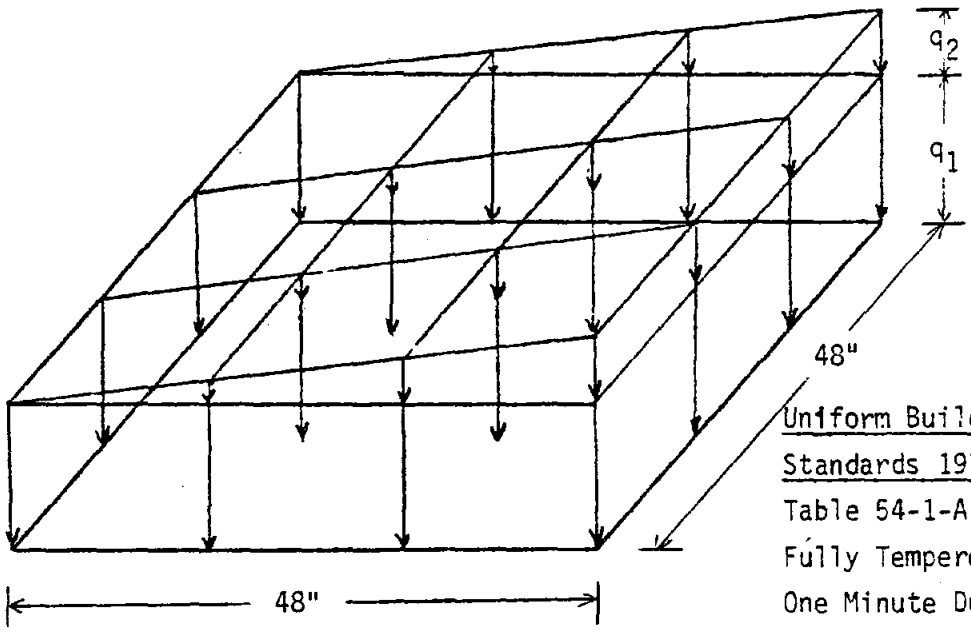


Uniform Building Code Standards 1976

Table 54-1-A

Fully Tempered Plate Glass

One Minute Duration Wind Load

Ultimate Tensile Stress = 20000 psi

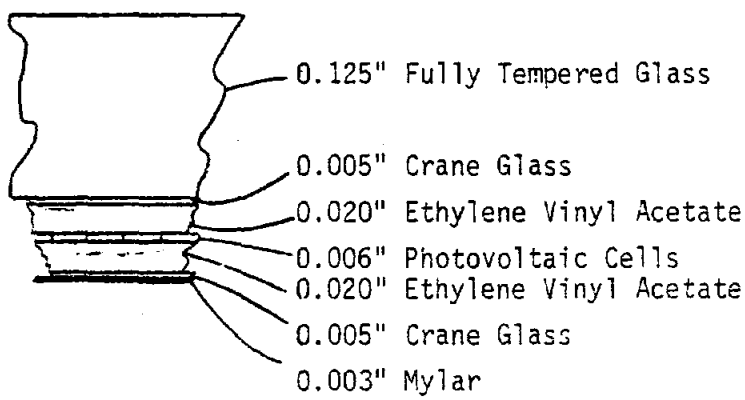


Formulas for Stress and Strain, R.J. Roark & W.C. Young, 5th Edition

Table 26, #1a & #1d

Maximum Bending Stress = 5300 psi, 0.125" glass only marginally effective, requires use of fully-tempered glass which yields a safety factor of 3.8.

BECHTEL'S STATIC FLAT PLATE PHOTOVOLTAIC STRUCTURE, WIND LOADS

PANEL SIDE SUPPORTS: Supports a 4 foot width
MT 4 X 3.25, Material: A 36 ($F_y$ = 36000 psi)
AISC Allowable Bending Stress = 0.60 $F_y$ = 21600 psi
Actual, Wind Only, Bending Stress = 13000 psi

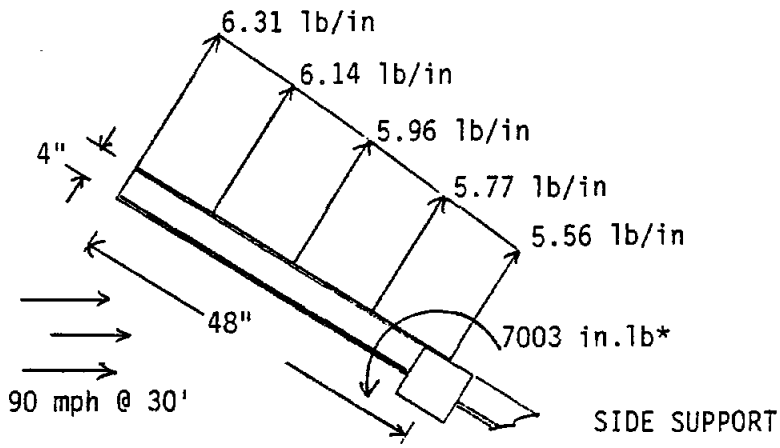


TORQUE TUBE: Supports 10 - 4 ft. x 8 ft. Panels
6" x 6" x 1/4" Square Beam
Material: A 500 Grade C ($F_y$ = 50000 psi)
W = 426.8 lb/48 in.
= 8.883 lb/in.*

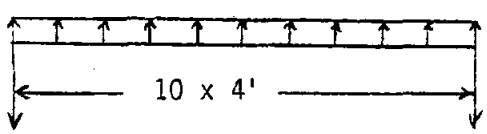


AISC Allowable Bending Stress = 0.60 $F_y$ = 30000 psi
Actual, Wind Only, Bending Stress = 26000 psi

*NOTE: Wind load only, dead load is in the opposite direction.

4. Lightning Protection

Lightning strikes present two problems for the PV CPS.

a) How to protect the PV array?

b) How to protect the PCU?

To protect the photovoltaic array a lightning mast could be provided by connecting into a ground at each array or group of arrays. The problem is the undesirable shadowing and potential safety hazard to personnel. To minimize shadowing the mast should be small in diameter. However, a small diameter mast would sway in windy conditions and offer only marginal protection. It has been decided that a mast or lightning rod would not be desirable or cost effective.

Lightning protection therefore becomes a difficult problem. One idea is to provide limited protection at the dc collection/termination points at the inverter. At collection junction boxes surge suppressors would be added into the positive and negative dc buses. The arrestors need to be rated for 2.7 KV. This should provide some protection for the dc side of the system from indirect strikes.

PCU protection is accomplished by the ground grid mat around each PCU and arrestors on the step up transformers of the PCU (see DWG 849PCPS2001-4).

C. AUTOMATED INSTALLATION

A conceptual trade-study was considered to evaluate the construction cost benefits that may accrue from the use of automated array installation techniques. Automated installation methods seek to replace labor-intensive functions with non labor-intensive devices and to utilize labor move productively in surveillance roles. At the present time, a dearth of knowledge exists on the actual cost benefits associated with mechanical installation.

One scenario has been identified for automating the installation of a flat plate photovoltaic field using wooden pole structural supports. The major systems included in the automated installation scenario are: 1) support structure/array installation vehicle and 2) field position indication and control. The development of a vehicle to automatically install a concentrator array (complete with drive mechanism) would require significantly more effort than that associated with the installation of flat plate photovoltaic panels on a support structure. Estimated costs for the development of automated systems have been published[13].

13 Op. Cit., Burt Hill Kosar Rittlemann Associates.

Shipping procedures could also be modified by incorporating three sets of re-usable metal containers for three specific functions: 1) loading arrays at the manufacturing site, 2) shipping arrays to the construction site, and 3) unloading arrays at the construction site. This method would reduce the overall container cost, but precise loading/shipping/unloading scheduling is required before an actual cost benefit can be realized.

Due to the uncertainty of development costs and the excellent data available on conventional installation, automated procedures were not considered in this study. Future PV CPS designers can consider the existing data on automated installation in comparison to the data developed under this contract for conventional installation.

## D. PCU CONTROL INTERFACE

A number of alternatives for signal transfer from ICADS to the PCU's were considered. Fiber optics have the advantage of not being susceptible to lightning strikes and they are relatively insensitive to interference from power lines. The major disadvantage is cost. Distributed computer systems have the advantages of greater capability in terms of flexibility of data roles and decision making capabilities. Such systems are susceptible to interference and consequently can operate over only short lengths of signal wire. Coverage of the fields requires that subcomputer stages be placed in the field at strategic locations. This places a requirement for additional environmental enclosures since these units cannot tolerate the temperature extremes anticipated in the field.

The advantages and disadvantages of the above approaches resulted in a marginal performance when compared with a system employing modem pairs and standard telephone type signal lines. Modem pairs, while not capable of the performance possible with a distributed computer system, can operate over distances much greater than those required for this project. Having individual pairs for each unit increases field reliability since failure of one link affects a much smaller portion of the field. Finally, environmental requirements can be eased since they can operate over the full range of ambient conditions anticipated with this project.

## E. FIELD CABLING/ENERGY LOSSES

The ac cabling configuration utilized in the design of the PV CPS was specified in the initial design (kilowatt losses less than one percent). As shown in Table IIIE-1 several cable sizes were investigated for the two proposed intermediate bus voltages 13.8 kV and 34.5 kV. As shown in the table, the smallest available cable easily meets the loss requirements is three conductor No. 1/0. An acceptable kilowatt loss at 13.8 kV (15 kV cable insulation class) would require a minimum of No. 2/0 cable.

The dc cable losses were again determined primarily by the smallest cable size that can be manufactured at 2000 volts. As shown in Table IIA-3, the losses are well below the required one percent.

Table IIIE-1. ac Collection System Power Loss

| General Information<br>5 MVA Subfield, Total of 20 Subfields<br>Average Circuit Length, 4465 ft | | | | |
|---|---|---|---|---|
| Conductor 3-Conductor | 15 kV Loss in kW | 15 kV % Loss | 34.5 kV Loss in kW | 35 kV % Loss |
| #2 | 94.770 | 1.895 | ---- | ---- |
| #1 | 75.465 | 1.509 | ---- | ---- |
| #1/0 | 60.261 | 1.205 | 9.966 | 0.1992 |
| #2/0 | 48.384 | 0.968 | 7.761 | 0.155 |
| #3/0 | 38.673 | 0.774 | 6.201 | 0.124 |
| #4/0 | 30.957 | 0.619 | 4.965 | 0.099 |
| 250 MCM | 26.463 | 0.529 | 4.245 | 0.085 |
| 350 MCM | 19.267 | 0.3853 | 3.09 | 0.062 |

## F. INTERMEDIATE HIGH VOLTAGE BUS

Collection of the PCU outputs in the most economical manner while reducing power loss are critical in acES design. A study has been made to determine which intermediate bus voltage, (13.8 kV or 34.5 kV) is best suited for use in the photovoltaic design.

At 13.8 kV, equipment (rated 15 kV) is of a standard design readily available from numerous companies in the United States. When 34.5 kV is considered, one must realize that for switchgear, in particular, most suppliers are European. S&C, a U.S. company, does have this equipment but each order is a custom design, which necessarily increases cost.

This method used for evaluation is the Present Worth of Required Revenue (PWRR), a system widely accepted and used in the utility industry. As shown in Table IIIF-1 the capital investment for the 34.5 kV system is higher than for 13.8 kV. When a rate-of-return (ROR) is calculated the 44.5% ROR for the 34.5 kV system offsets the higher capital investment.

The lowest PWRR for the intermediate voltages are using No. 1/0 cable at 34.5 kV and 350 MCM cable at 13.8 kV. As shown in Table IIIF-1 a significant advantage will be realized over a thirty year period using the 34.5 kV system.

Table IIIF-1 IHV Level Trade Study Results

| Cable Size 3-Conductor Armored | 1 Cable Cost $/ft. | 2 Cable Inst. MH/ft. | 3 Inst. Cost Cable $/ft. | 4 Pres. Worth 1st Cost (Cable) $M | 5 Pres. Worth 1st Cost (Equip) $M | 6 $I^2R$ Loss kW | 7 PW $I^2R$ Loss $M | 8 PWRR 1-1-82 $M | 9 Diff. PW $M | 10 Cap. Inv. 1-1-82 $M |
|---|---|---|---|---|---|---|---|---|---|---|
| **15 kVac IHV Level** | | | | | | | | | | |
| #2 | 6.90 | 0.30 | 8.10 | 1.957 | 1.941 | 1895.4 | 6.572 | 10.471 | 3.741 | 2.688 |
| #1 | 7.16 | 0.40 | 10.80 | 2.344 | 1.941 | 1509.3 | 5.234 | 9.518 | 2.788 | 2.955 |
| #1/0 | 7.81 | 0.42 | 11.34 | 2.499 | 1.941 | 1205.2 | 4.179 | 8.618 | 1.889 | 3.062 |
| #2/0 | 8.20 | 0.44 | 11.88 | 2.620 | 1.941 | 967.7 | 3.356 | 7.917 | 1.187 | 3.145 |
| #3/0 | 8.90 | 0.46 | 12.42 | 2.782 | 1.941 | 773.5 | 2.682 | 7.405 | 0.675 | 3.257 |
| #4/0 | 8.95 | 0.48 | 12.96 | 2.859 | 1.941 | 619.1 | 2.147 | 6.947 | 0.217 | 3.310 |
| 250 MCM | 10.36 | 0.50 | 13.50 | 3.114 | 1.941 | 529.3 | 1.835 | 6.900 | 0.160 | 3.486 |
| 350 MCM | 12.15 | 0.53 | 14.31 | 3.453 | 1.941 | 385.3 | 1.336 | 6.730 | 0 | 3.720 |
| **35 kVac IHV Level** | | | | | | | | | | |
| #1/0 | 8.80 | 0.57 | 15.31 | 3.146 | 2.433 | 199.3 | .691 | 6.270 | 0 | 3.848 |
| #2/0 | 9.60 | 0.59 | 16.04 | 3.346 | 2.433 | 155.2 | .538 | 6.317 | 0.047 | 3.985 |
| #3/0 | 11.00 | 0.62 | 16.77 | 3.624 | 2.433 | 124.0 | .430 | 6.487 | 0.217 | 4.177 |
| #4/0 | 12.00 | 0.65 | 17.50 | 3.850 | 2.433 | 99.3 | .344 | 6.627 | 0.357 | 4.333 |
| 250 MCM | 15.15 | 0.68 | 18.23 | 4.356 | 2.433 | 84.9 | .294 | 7.083 | 0.813 | 4.682 |
| 350 MCM | 18.50 | 0.72 | 19.32 | 4.936 | 2.433 | 61.8 | .214 | 7.583 | 1.312 | 5.082 |

Notes:

Col. 2 = Col No. 2 x 1.35
Col. 3 = Manhours (MH) x $20,000 x 1.35 (Terminations)
Col. 4 = (Cost/Ft. + Col. 3) x 90,000 x 1.45 (FCR x P/A)
Col. 5 = $1,677,880 x 1.45
Col. 6 = Electrical $I^2R$ Losses
Col. 7 = (1800 + 3100 x 0.03 x 17.93149) x kW loss
Col. 8 = Col. 4 + Col. 5 + Col. 7
Col. 9 = Differential Present Worth
Col.10 = (Col. 1 + Col. 3) x 90,000 + 1,677,880

(b) MAR = 12%; N = 30 Yrs, Cable FCR = 18% (P/A 12,30) = 8.05518, Energy ESC = 8%/Yr (PWSF 8, 12, 30) = 17.93149, CF = 0.35 (3100 Hrs/Yr)
(c) Labor Rate = $20.00/Hr
(d) P.W. Electric Demand = $1800/kW
Electirc Energy Only (1/1/82) = 0.3¢/kWH

APPENDIX A - COST ESTIMATE

## I. INTRODUCTION

The construction cost estimate presented herein is based on the 100 MW Photovoltaic Central Power Station design described in this report. This PV power plant is designed for a specific site near Red Rocks, Arizona, and is located adjacent to the Arizona Public Service Company owned Saguaro Power Plant. Costs are developed for all phases of project construction from project development through project commissioning. Operating and maintenance expenses, as well as financing charges, allowance for funds used during construction (AFUDC), operating revenue, and other ownership and disposal costs are not considered in this analysis.

Every effort has been made to include the majority of construction cost items. This has been accomplished by using the Hardware Breakdown Structure (HBS) developed for the plant (see Appendix E), along with a condensed version of the Cost Breakdown Structure (CBS) developed by Theodore Barry and Associates under contract to Sandia Laboratories. The CBS includes not only hardware and material accounts, but service, engineering and management accounts as well.

Parametric costs for the PV arrays and costs for the inverters are included.

## II. METHODOLOGY

The methodology used to determine the final plant costs consists of the following general steps:

1. Define ground rules
2. Define project organizational structure
3. Define cost breakdown structure
4. Assign costing responsibility to CPS team members
5. Define parametric values for;
   - arrays
   - inverters
6. Assembly costs

### A. GROUND RULES

The ground rules are based upon the program objective of providing the most realistic costs possible, given the level of detail of the central power station design. The ground rules identify the types of costs to be addressed, the level of reporting detail, and the extent of coverage the estimates are to embrace. Table A-1 lists the ground rules under which the cost estimate was developed.

### B. PROJECT ORGANIZATION

In order to cost the plant realistically it was necessary to define a project organizational structure. This project structure corresponds to one of the "typical" project organizational sructures seen in the utility industry. Other forms are possible, and in fact the owner (assumed to be APS) might very well choose to do more of the engineering and/or construction activities than are assumed below. However, the structure shown has been determined to be generally the most appropriate for this study.

Table A-1. Cost Estimating Ground Rules

- The cost estimate will include all costs from initial development, through plant commissioning.
- No financing or operating and maintenance cost are to be considered.
- Costs are to be reported in constant 1982 dollars, with final cost summaries to be in both 1982 dollars and 1980 dollars.
- The Cost Breakdown Structure will be based on the CBS developed by Theodore Barry and Associates.
- Costs are to be developed based upon using the results of this CPS study as a "starting point." (i.e., no further development costs considered)

- Estimates are to accurately reflect the costs that would be seen at the Saguaro plant site and other defined office and manufacturing/engineering sites.

- Costs for each line item are to be broken down into:

  o Labor

  o Materials

  o Equipment/subcontract/other

along with

  o Units (hours, pounds, cubic yards, etc.)

  o Rate ($/hr, $/lb, etc.)

  o Burden, overhead, and fee

- Current technology is to be considered, except for photovoltaic array costs and inverter costs. These will be costed using parametric cost data, assuming plant construction in the mid-1980's time frame.

The project organizational structure consists of an owner/project manager (APS), with separate A&E and general contractor subcontracting directly to the owner (see Figure A-1).

The PV manufacturer would be viewed as primarily a vendor, with some engineering backup and field liaison responsibilities. He would be subcontracted directly to the owner, along with the other major component manufacturers/suppliers, and would work directly with the A&E during the design phases, and with the general contractor on a support basis during construction.

It was assumed that the PV manufacturer would also be responsible for the engineering and installation of the Instrumentation, Control and Display System (ICADS), though this could also be handled by the A&E, or a specialized systems control company.

## C. COST BREAKDOWN STRUCTURE

The Cost Breakdown Structure used in this study to accumulate and report costs is based upon the Cost Breakdown Structure developed by Theodore Barry and Associates, TB&A, under contract to Sandia, entitled "Cost Accounting and Reporting System Manual for Photovoltaic Project Management", Sandia report Number SAND 81-7046.

Figure A-1. Project Organization Structure

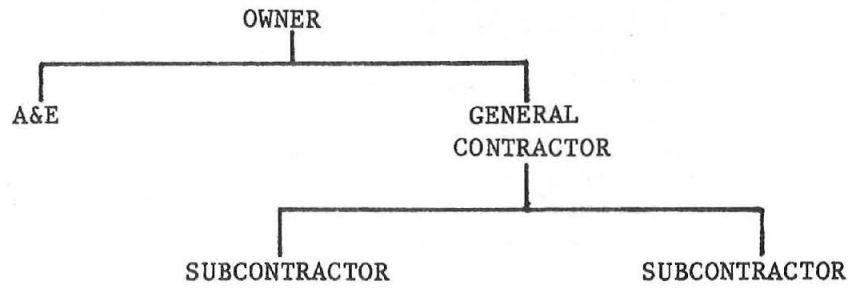


Owner/Project Manager

- o Overall Project Responsibility
- o Project Coordination/General Management
- o Budget & Schedule Control
- o Team Selection (A&E, G.C., PV Supplier)
- o General Adminstrative Services
- o Testing Programs (Site Conditions)
- o Applications & Approvals
- o Construction Management (Oversee G.C.)
- o Personnel & Public Relations
- o Site Security
- o Major Components Procurement

A&E

- o Preliminary Design Services (Design Criteria)
- o Detailed Design Services (Engineering)
- o A&E Design Services
- o Systems Integration
- o Construction Liaison

General Contractor

- o Project Construction
- o Construction Subcontract Management
- o Construction Supervision
- o Minor Component/Materials Procurement

This Cost Breakdown Structure (CBS) is oriented slightly more towards the actual cost control and management of a PV project. It was not specificaly designed as a pre-program cost estimating tool. In fact, the depth of detail, and extent of coverage included in the TB&A accounts provided an excellent mechanism for checking the overall coverage of the present cost estimate.

In order to use the TB&A cost breakdown structure, we first reviewd it for accounts that were clearly not needed. An example of these were the acounts that referred to electrical storage. Since this 100 MW plant had not provision for electrical storage, these accounts were removed from the CBS.

After the derivation of the CBS, the costing responsibility for each account was assigned to one of the three CPS team members. This assignment was based on the relative ability of the team member to develop realistic costs for the account item.

Martin Marietta Denver Aerospace retained overall costing responsibility, but was specifically responsible for the ICADS cost estimate. Arizona Public Service was responsible for the program management and "owner" related costs, while Stearns Roger was responsible for the plant engineering and construction costs.

The resulting CBS major accounts are shown below.

Cost Breakdown Structure - Major Accounts

| | | |
|---|---|---|
| 1000 | | Project Development |
| | 1100 | Managment Services |
| | 1200 | Engineering Services |
| | 1300 | A&E Services |
| | 1400 | Testing Programs |
| | 1500 | Applications & Approvals |
| | 1600 | Construction Management |
| 2000 | | Project Construction |
| | 2100 | Land & Taxes |
| | 2200 | Site Preparation & Improvements |
| | 2300 | Non-Building Foundations |
| | 2400 | PV System |
| | 2500 | Building & Enclosures |
| | 2700 | Operation and Maintenance Equipment |
| | 2900 | Adjustments & Contingencies |

A detailed CBS account listing is included in Section IV of this Appendix.

## D. PARAMETRIC VALUES

The 100 MW PV plant is presumed to be constructed in the mid-1980's. Quite a bit of development is expected to take place during the interim on PV array and inverter technology and cost reduction. Due to the inherent uncertainty in predicting array and inverter costs, range of parametric cost values was used.

The range of values reflects what should be attainable in the mid-80's time frame, to what is somewhat optimistic but still conceivable in the long term (late 80's to early 90's).

These parametric values are:

| | $/Wp (1982 dollars) |
|---|---|
| Flat Plate (including) | 3.50, 2.00, 1.00 |

- Drive
- Support tube
- Module mounts
- Modules & dc wiring
- Controller & cables

| | |
|---|---|
| Inverter (featuring) | 0.50, 0.20, 0.50 |

- dc to ac conversion
- Harmonic suppression
- EMI suppression
- Power Factor Correction
- Electrical Protection

These values will be used in the cost analysis assuming a 100 MW nominal plant rating.

## III. COST ESTIMATE

### A. COST SOURCES

The hardware breakdown structure (HBS), the system, subsystem, and component specifications, the plant drawings and the construction schedule, along with the previously discussed costing methodlogy, were used to define the CPS. Costs for the CPS were developed using the following sources.

Material costs were obtained from such sources as written and oral vendor quotes, catalog prices, recent historical purchase prices for identical items, and from such cost estimating publications as "Mechanical and Electrical Cost Data, 1982", Robert Snow Means Company, Inc.

Labor hours were developed from accepted A&E labor output rates, (including adjustment for congested area), cost estimating publications, and estimated labor loading based on historical data and detailed analyses of task requirements. Equipment requirements were developed similarly, as were subcontractor requirements and costs.

Construction labor rates are representative of the trade scales for the Phoenix, Arizona area with a later adjustment for remote location. They include the base rate plus fringe benefits. The construction burden rates are shown in Table A-2, and are developed from the "Means" cost data book. Therefore, construction labor costs include the base rate, fringe benefits, burden, and a 10% fee.

Material, equipment, and other/subcontractor costs are typically loaded with only the 10% fee. In fact all costs include the 10% fee except owner management costs, taxes, land, and other items described later. Owner labor costs are based on average base labo rates plus PCU allowable labor loading and payroll loading factors.

Table A-2. Construction Labor Burden Rates (% of Direct Labor)

| Burden Cost Category \ Labor Category | Concrete Labor | Earth Work Labor | Road Work Labor | Building Labor | General Construction Labor | Electrical Labor |
|---|---|---|---|---|---|---|
| Miscellaneous | 1 | - | - | - | - | - |
| Supervision | 6 | 6 | 6 | 6 | 6 | 5 |
| Tools & Equipment | - | 2 | 2 | 1 | 2 | 3 |
| Temporary Facilities | 4 | 3 | 3 | 2 | 3 | 3 |
| Main Office | 9 | 5 | 5 | 5 | 5 | 9 |
| Payroll Tax & Insurance | 20 | 20 | 20 | 20 | 20 | 20 |
| Sub Total: | 40 | 36 | 36 | 34 | 36 | 40 |
| Major Equip & Rentals | 12 | 20 | 40 | 20 | - | - |
| TOTAL | 52 | 56 | 76 | 44 | 36 | 40 |

On top of the construction costs are added a 15% overall contingency, a 15% labor adjustment for remote location, and a 5% equipment adjustment for remote location.

A&E engineering charges are based on a gross 10%-plant cost, not including the cost of the arrays and inverters, but including all items identified in the CBS, through start-up charges.

ICADS costs are representative of average engineering labor rates, manufacturing labor rates and facilities burden rates, plus a 10% fee. ICADS installation labor costs include a 30% remote location factor also.

Taxes and other similar site specification costs are based on actual Arizona tax rates and estimates of costs as they apply specifically to the Saguaro site such as Environmental Impact Statement preparation. These costs do not include a 10% fee.

Spares costs have been included in the construction material costs, and are assumed to be captured in the parametric values for arrays and inverters.

## B. RESULTS

The results of the cost estimate are shown in Table A-3. The scenarios are based on:

| SCENARIO | | ARRAY $/W 3.50 | 2.00 | 1.00 |
|---|---|---|---|---|
| INVERTER $/W | .50 | A | B | C |
| | .20 | D | E | F |
| | .05 | G | H | I |

(1982$)

In addition, a cost estimate is given for zero costs for the arrays and inverters. This is the basic balance-of-system cost including installation and checkout (but not material cost) of the inverters and arrays.

Figure A-2 shows the cost estimate in graphic form, while Table A-4 shows the major account cost totals.

Table A-3. Total 100 MW Concentrator PV Plant Cost Estimates

| Scenario | Total Plant Cost* ($x10$^6$) 1982 $ | 1980 $ |
|---|---|---|
| A (4.00)** | 505.0 | 427.0 |
| B (2.50) | 350.5 | 296.4 |
| C (1.50) | 247.5 | 209.3 |
| D (3.70) | 474.1 | 400.9 |
| E (2.20) | 319.6 | 270.2 |
| F (1.20) | 216.6 | 183.1 |
| G (3.55) | 458.7 | 387.9 |
| H (2.05) | 304.2 | 257.2 |
| I (1.05) | 201.2 | 170.1 |
| - (0) | 93.0 | 78.6 |

* - Rounded to nearest $100,000
** - Total ($/Wp) = inverter + array

Figure A-2 Graphic Representation of Plant Costs

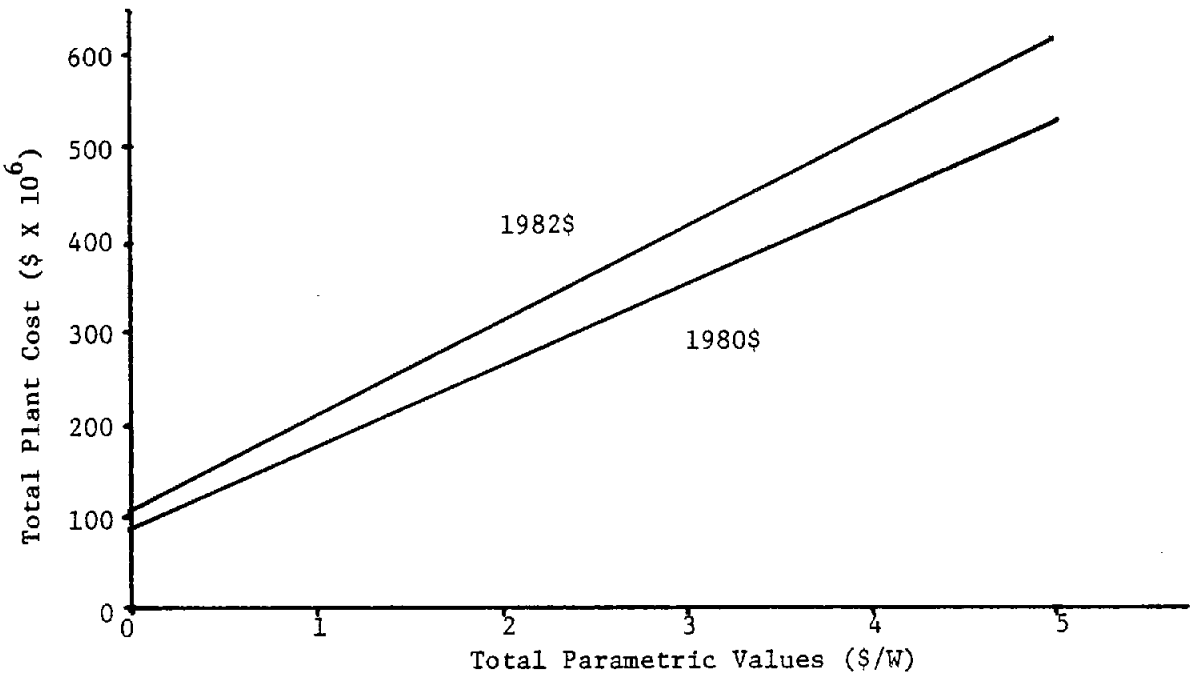


Table A-4. Major Account Cost Totals (Less Parametric Values)

| Account Number | Account Description | Account Total ($) 1982 $ | 1980 $ |
|---|---|---|---|
| 1000 | Project Development | | |
| 1100 | Management Services | 284,100* | 240,200* |
| 1200 | Engineering Services | 6,683,500 | 5,651,300 |
| 1300 | A&E Services | | |
| 1400 | Testing Programs | 32,500 | 27,500 |
| 1500 | Applications & Approvals | 709,700 | 600,100 |
| 1600 | Construction Management | 608,500 | 514,500 |
| 2000 | Project Construction | | |
| 2100 | Land & Taxes | 1,876,300* | 1,586,500* |
| 2200 | Site Prep. & Improvements | 7,658,400 | 6,475,700 |
| 2300 | Non-Building Foundation | 7,571,900 | 6,402,500 |
| 2400 | PV System | 48,212,700* | 40,766,900* |
| 2500 | Buildings & Enclosures | 668,900 | 565,600 |
| 2700 | Operation & Maint. Equip | 831,800 | 703,300 |
| 2900 | Adjustments & Contingencies | 15,202,600 | 12,854,800 |
| | TOTAL | 90,304,900* | 76,388,900* |

* These accounts are less values which are functions of the parametric costs of arrays and inverters.

## C. DISCUSSION

These cost estimates include no financing charges, effects due to the investment and energy tax credits, or escalation effects over the period of construction. These will all play a significant role in the economic justification of a plant such as this. In addition, energy and capacity values must be assessed in real operating system terms to determine long term economic viability.

The cost of the arrays and inverters obviously play a major role in the total plant cost, and are subject to the most cost uncertainty and potential technological development. It must be understood that the parametric values expressed for the arrays are based upon changes in the production cost of the array, holding efficiency constant for the cost estimates. If the efficiency were to change, the field design would change, altering the whole cost structure. In reality this is exactly what is expected to happen - both cost reduction and efficiency improvement leading to lower cost-per-watt PV equipment and lower field costs.

## IV. COST BACKUP DATA

Pages A-13 through A-15: Cost Breakdown Structure Detailed Account Listing

Pages A-19 through A-42: Detailed Cost Sheets

## Cost Breakdown Structure - Deatiled Account Listing

| Account Number | Account Description |
|---|---|
| 1000 | PROJECT DEVELOPMENT |
| 1100 | Management Services<br>- Program Definition<br>- Team Selection & Coordination<br>- contract Negotiations<br>- Budget & Schedule Control, Report Preparation, Reviews & Approvals<br>- General Administrative Service |
| 1200 | Engineering Services |
| 1211 | Preliminary Engineering |
| 1212 | General & Detailed Engineering |
| 1300 | A&E Design Services<br>- Buildings & Enclosures<br>- Site Development<br>- General A&E Activities |
| 1400 | Testing Program/Site Conditions<br>- Soil Testing<br>- Percolation Testing<br>- Climatic Criteria Surveys |
| 1500 | Applications and Approvals<br>- Archeological<br>- Environmental Impact Statement |
| 1600 | Construction Management<br>- Bidding and Procurement<br>- Site Construction Administration<br>- Expediting Activities<br>- Equipment Manual and Spare Parts Inventory Catalog Assembly |
| 2000 | PROJECT CONSTRUCTION |
| 2100 | Land Acquisition |
| 2111 | Land Cost<br>- PV Area<br>- Balance of Plant |
| 2112 | Taxes<br>- Property Taxes<br>- Contractors Tax<br>- Sales Tax |

| | | |
|---|---|---|
| 2000 | | PROJECT CONSTRUCTION (CONTINUED) |
| | 2200 | Site Preparation & Improvement |
| | 2214 | Clear & Grub |
| | 2215 | Grading & Stabilization |
| | 2216 | Trenching & Backfill |
| | 2217 | Utilities |
| | 2218 | Paving and Roads |
| | 2219 | Plantings |
| | 2220 | Fencing & Gates |
| | 2300 | Non-Building Foundations<br>- Array<br>- Field Distribution<br>- Water Tank<br>- Subfield Electric Equipment<br>- Switchgear Electric Equipment |
| | 2400 | PV System |
| | 2401 | Array<br>- Installation<br>- Array |
| | 2403 | Power Conditioning |
| | 2404 | Electrical Systems<br>- Field Wiring & Equipment<br>- Switchyard<br>- 115kV Bay Addition |
| | 2407 | ICADS |
| | 2408 | Safety & Security |
| | 2500 | Buildings & Enclosures |
| | 2501 | Furniture Allowance |
| | 2503 | Addition to Existing Control Building |
| | 2504 | Field Control Building |
| | 2508 | Visitor Center |
| | 2509 | Warehouse/Maintenance Building |

| | |
|---|---|
| 2000 | PROJECT CONSTRUCTION (CONTINUED) |
| 2700 | Maintenance Equipment |
| 2711 | Maintenance Vehicles/Material Handling |
| 2712 | Maintenance Tools & Equipment |
| 2900 | Contingencies & Adjustments |
| 2911 | Labor Adjustments |
| 2912 | Equipment Adjustment |
| 2920 | Contingencies |

NOTE: PAGES A-16 thru A-18 INTENTIONALLY LEFT BLANK

| ACCOUNT | TYPE EST. | BY | DATE | PAGE |
|---|---|---|---|---|
| 1000 PROJECT DEVELOPMENT | | PWH | 5/82 | 1 |

| JOB NO. | CLIENT | PROJECT | LOCATION |
|---|---|---|---|
| | APS | 100 MW FLATPLATE PV PLANT | RED ROCK, AZ |

| ACCT. NO. | ACCOUNT DESCRIPTION | U/M | QUAN. | LABOR UNIT | LABOR MH | LABOR $/MH | LABOR AMOUNT | MATERIAL UNIT | MATERIAL AMOUNT | OTHER UNIT | OTHER AMOUNT | TOTAL |
|---|---|---|---|---|---|---|---|---|---|---|---|---|
| 1100 | MANAGEMENT SERVICES | | | | | | | | | | | |
| | PROGRAM DEFINITION | | | | | | 31,842 | | | | | 31,842 |
| | TEAM SELECTION & COORDINATION | | | | | | 31,842 | | | | | 31,842 |
| | CONTRACT NEGOTIATIONS | | | | | | 42,456 | | | | | 42,456 |
| | BUDGET & SCHEDULE CONTROL, | | | | | | | | | | | |
| | & REPORT PREPARATION, | | | | | | | | | | | |
| | & REVIEWS & APPROVALS | | | | | | 186,858 | | | | | 186,858 |
| | GENERAL ADMINISTRATIVE | | | | | | | | | | | |
| | SERVICES - 1% OF PLANT COST | | | | | | (*) | | | | | (*) |
| | TOTAL | | | | | | | | | | | (*) 292,998 |
| | (*) DEPENDS ON PARAMETRIC VALUES | | | | | | | | | | | |

| ACCOUNT | TYPE EST. | BY | DATE | PAGE |
|---|---|---|---|---|
| 1000 PROJECT DEVELOPMENT | REV. A | RWH | 5/82 | 2 |

| JOB NO. | CLIENT | PROJECT | LOCATION |
|---|---|---|---|
| | APS | 100 MW FLAT PLATE PV PLANT | RED ROCK, AZ |

| ACCT. NO. | ACCOUNT DESCRIPTION | E/M | QUAN. | LABOR UNIT | LABOR MH | LABOR $/MH | LABOR AMOUNT | MATERIAL UNIT | MATERIAL AMOUNT | OTHER UNIT | OTHER AMOUNT | TOTAL |
|---|---|---|---|---|---|---|---|---|---|---|---|---|
| 1211 | PRELIMINARY ENGINEERING | | | | | | | | | | | |
| | TO ESTABLISH DESIGN CRITERIA | | | | | | | | | | | |
| 1212 | GENERAL ENGINEERING ACTIVITES & | | | | | | | | | | | |
| | DETAILED ENGINEERING | | | | | | | | | | | |
| 1300 | A&E DESIGN SERVICES – | | | | | | | | | | | |
| | BUILDINGS & ENCLOSURES, | | | | | | | | | | | |
| | SITE DEVELOPMENT, | | | | | | | | | | | |
| | GENERAL A&E ACTIVITES | | | | | | | | | | | |
| | TOTAL | | | | | | | | | | | 5,019,184 |

| ACCOUNT | TYPE EST. | BY | DATE | PAGE |
|---|---|---|---|---|
| 1000 PROJECT DEVELOPMENT | | E.W.H | 7/82 | 3 |

| JOB NO. | CLIENT | PROJECT | LOCATION |
|---|---|---|---|
| | APS | 100 MW FLATPLATE PV PLANT | Red Rock AZ |

| ACCT. NO. | ACCOUNT DESCRIPTION | U/M | QUAN. | LABOR UNIT | LABOR MH | LABOR $/MH | LABOR AMOUNT | MATERIAL UNIT | MATERIAL AMOUNT | OTHER UNIT | OTHER AMOUNT | TOTAL |
|---|---|---|---|---|---|---|---|---|---|---|---|---|
| 1400 | TESTING PROGRAMS-SITE CONDITIONS | | | | | | | | | | | |
| | SOIL TESTING | | | | | | | | | | 20,000 | 20,000 |
| | PERCOLATION TESTING | | | | | | | | | | 10,000 | 10,000 |
| | CLIMATIC CRITERIA SURVEYS | | | | | | | | | | 2,500 | 2,500 |
| | TOTAL | | | | | | | | | | | 32,500 |
| 1500 | APPLICATIONS & APPROVALS | | | | | | | | | | | |
| | ARCHAEOLOGICAL | | | | | | | | | | 31,700 | 31,700 |
| | EIS | | | | | | | | | | 724,610 | 724,610 |
| | TOTAL | | | | | | | | | | | 756,310 |
| 1600 | CONSTRUCTION MANAGEMENT | | | | | | | | | | | |
| | BIDDING & PROCUREMENT | | | | | | 42,456 | | | | | 42,456 |
| | SITE CONSTRUCTION ADMIN. | | | | | | 495,320 | | | | | 495,320 |
| | EXPEDITING ACTIVITIES | | | | | | 74,298 | | | | | 74,298 |
| | EQUIPMENT MANUAL AND | | | | | | | | | | | |
| | SPARE PARTS INVENTORY | | | | | | | | | | | |
| | CATALOG ASSEMBLY | | | | | | 37,149 | | | | | 37,149 |
| | TOTAL | | | | | | | | | | | 649,223 |

| ACCOUNT | TYPE EST. | BY | DATE | PAGE |
|---|---|---|---|---|
| 2000 PROJECT CONSTRUCTION | REV. A | [illegible] | 5/82 | 4 |

| JOB NO. | CLIENT | PROJECT | LOCATION |
|---|---|---|---|
| | APS | 100 MW FLATPLATE PV PLANT | RED ROCK, AZ |

| ACCT. NO. | ACCOUNT DESCRIPTION | U/M | QUAN. | LABOR UNIT | LABOR MH | LABOR $/MH | LABOR AMOUNT | MATERIAL UNIT | MATERIAL AMOUNT | OTHER UNIT | OTHER AMOUNT | TOTAL |
|---|---|---|---|---|---|---|---|---|---|---|---|---|
| 2111 | LAND | | | | | | | | | | | |
| | PV AREA | AC | 1000 | | | | | | | | 500,000 | 500,000 |
| | BALANCE OF PLANT | AC | 1115 | | | | | | | | 557,500 | 557,500 |
| | TOTAL | | | | | | | | | | | 1,057,500 |
| 2112 | TAXES | | | | | | | | | | | |
| | PROPERTY TAXES DURING | | | | | | | | | | (*) | (*) |
| | CONSTRUCTION - 2% OF PLANT | | | | | | | | | | | |
| | CONTRACTORS TAX - | | | | | | | | | | 707,692 | 707,692 |
| | (4% OF 65% OF CONT. LBR) | | | | | | | | | | | |
| | SALES TAX (SOLAR EXEMPT) | | | | | | | | | | Ø | Ø |
| | TOTAL | | | | | | | | | | | (*) 707,692 |
| | (*) DEPENDS ON PARAMETRIC VALUES | | | | | | | | | | | |

| ACCOUNT | TYPE EST. | BY | DATE | PAGE |
|---|---|---|---|---|
| 2000 PROJECT CONSTRUCTION | | BLW | 5/82 | 5 |

| JOB NO. | CLIENT | PROJECT | LOCATION |
|---|---|---|---|
| | APS | 100 MW FLAT PLATE PV PLANT | RED ROCK, AZ |

| ACCT. NO. | ACCOUNT DESCRIPTION | U/M | QUAN. | LABOR UNIT | LABOR MH | LABOR $/MH | LABOR AMOUNT | MATERIAL UNIT | MATERIAL AMOUNT | OTHER UNIT | OTHER AMOUNT | TOTAL |
|---|---|---|---|---|---|---|---|---|---|---|---|---|
| 2214 | CLEAR & GRUB | AC | 1134 | | | | | | | 1420 | 1,610,280 | 1,610,280 |
| 2215 | GRADING & STABILIZATION | | | | | | | | | | | |
| | CUT & FILL | CY | 252,358 | | | | | | | 3.08 | 777,263 | 777,263 |
| | FINE GRADING | CY | 201,875 | | | | | | | 1.77 | 357,319 | 357,319 |
| | HEADWALL | | | | | | | | | | | |
| | CONCRETE | | | | 690 | | 19,682 | | 8425 | | | 28,107 |
| | EARTHWORK | | | | 45 | | 1,114 | | | | | 1,114 |
| | CULVERT | | | | | | | | | | | |
| | PIPE | | | | 748 | | 28,065 | | 40,841 | | | 68,906 |
| | EARTHWORK | | | | 1122 | | 27,783 | | | | | 27,783 |
| | CONCRETE LINING | | | | 1053 | | 30,037 | | 25869 | | | 55,906 |
| | TOTAL | | | | | | | | | | | 1,316,398 |
| 2216 | TRENCHING & BACKFILL | | | | | | | | | | | |
| | MAIN TRENCHES | LF | 37,920 | | | | | | | | 52,788 | |
| | CENTRAL TRENCH | LF | 1016 | | | | | | | | 1675 | |
| | BRANCH TRENCH | LF | 4554 | | | | | | | | 4,099 | |
| | TOTAL PER SUBFIELD | | | | | | | | | | 58,562 | |
| | X 20 SUBFIELDS | | | | | | | | | | | 1,171,240 |
| | TRENCH FROM INVERTERS | | | | | | | | | | | |
| | TO SWITCH YARD | LF | 34,742 | | | | | | | | 93,075 | 93,075 |
| | TOTAL | | | | | | | | | | | 1,264,315 |

| ACCOUNT | TYPE EST. | BY | DATE | PAGE |
|---|---|---|---|---|
| 2000 PROJECT CONSTRUCTION | | RWH | 5/82 | 6 |

| JOB NO. | CLIENT | PROJECT | LOCATION |
|---|---|---|---|
| | APS | 100 MW FLATPLATE PV PLANT | RED ROCK, AZ |

| ACCT. NO. | ACCOUNT DESCRIPTION | U/M | QUAN. | LABOR UNIT | LABOR MH | LABOR $/MH | LABOR AMOUNT | MATERIAL UNIT | MATERIAL AMOUNT | OTHER UNIT | OTHER AMOUNT | TOTAL |
|---|---|---|---|---|---|---|---|---|---|---|---|---|
| 2217 | UTILITIES – | | | | | | | | | | | |
| | CONTROL BLDG SEPTIC | | | | | | | | | | | |
| | TANK | | | | 34 | | 750 | | 750 | | | 1500 |
| | WATER LINE TO VISITORS | | | | | | | | | | | |
| | CENTER | LF | 250 | | 158 | | 3,528 | | 1,050 | | | 4,578 |
| | TOTAL | | | | | | | | | | | 6,078 |

| ACCOUNT | TYPE EST. | BY | DATE | PAGE |
|---|---|---|---|---|
| 2000 PROJECT CONSTRUCTION | | FINH. | 5/82 | 7 |

| JOB NO. | CLIENT | PROJECT | LOCATION |
|---|---|---|---|
| | APS | 100 MW FLATPLATE PV PLANT | PEDICK, AZ |

| ACCT. NO. | ACCOUNT DESCRIPTION | U/M | QUAN. | LABOR UNIT | LABOR MH | LABOR $/MH | LABOR AMOUNT | MATERIAL UNIT | MATERIAL AMOUNT | OTHER UNIT | OTHER AMOUNT | TOTAL |
|---|---|---|---|---|---|---|---|---|---|---|---|---|
| 2218 | PAVING & ROADS | | | | | | | | | | | |
| | MAIN ROAD & BRANCH | | | | | | | | | | | |
| | CUT & FILL | CY | 17,460 | | | | | | | | 53,777 | 53,777 |
| | BASE COURSE | CY | 13,095 | | 1218 | | 34,027 | | 100,975 | | | 135,002 |
| | PAVING SURFACE | CY | 25,867 | | | | | | | | 93,219 | 93,219 |
| | VISITOR CENTER | | | | | | | | | | | |
| | SIDEWALK | SF | 4500 | | 270 | | 7549 | | 4405 | | | 11,954 |
| | ASPHALT ROADS | SY | 2290 | | | | | | | | 41,220 | 41,220 |
| | ROADS WITHIN PERIM. FENCE | | | | | | | | | | | |
| | 24' - COMPACTION | SF | 776,400 | | 1223 | | 34,166 | | | | | 34,166 |
| | - BASE | CY | 23,900 | | 2223 | | 62,103 | | 184,293 | | | 246,396 |
| | 12' - COMPACTION | | 1,001,700 | | 1577 | | 44,056 | | | | | 44,056 |
| | - BASE | | 30,800 | | 2864 | | 80,010 | | 237,499 | | | 317,509 |
| | TOTAL | | | | | | | | | | | 977,299 |

| ACCOUNT | TYPE EST. | BY | DATE | PAGE |
|---|---|---|---|---|
| 2000 PROJECT CONSTRUCTION | | BUSH | 5/82 | 8 |

| JOB NO. | CLIENT | PROJECT | LOCATION |
|---|---|---|---|
| | APS | 100 MW FLAT PLATE PV PLANT | RED ROCK, AZ |

| ACCT. NO. | ACCOUNT DESCRIPTION | U/M | QUAN. | LABOR UNIT | LABOR MH | LABOR $/MH | LABOR AMOUNT | MATERIAL UNIT | MATERIAL AMOUNT | OTHER UNIT | OTHER AMOUNT | TOTAL |
|---|---|---|---|---|---|---|---|---|---|---|---|---|
| 2219 | PLANTINGS | | | | | | | | | | | |
| | VISITOR CENTER LANDSCAPE | | | | | | | | | | | |
| | ALLOWANCE | | | | | | | | | | 25,000 | 25,000 |
| 2220 | FENCING & GATES | | | | | | | | | | | |
| | 6'-0" CHAIN LINK W/3 | LF | 27278 | | | | | | | 11.00 | 300,058 | 300,058 |
| | STRAND BARBED WIRE | | | | | | | | | | | |

| ACCOUNT | TYPE EST. | BY | DATE | PAGE |
|---|---|---|---|---|
| 2000 PROJECT CONSTRUCTION | | TWH | 5/82 | 9 |

| JOB NO. | CLIENT | PROJECT | LOCATION |
|---|---|---|---|
| | APS | 100 MW FLAT PLATE PV PLANT | RED ROCK AZ |

| ACCT. NO. | ACCOUNT DESCRIPTION | U/M | QUAN. | LABOR UNIT | LABOR MH | LABOR $/MH | LABOR AMOUNT | MATERIAL UNIT | MATERIAL AMOUNT | OTHER UNIT | OTHER AMOUNT | TOTAL |
|---|---|---|---|---|---|---|---|---|---|---|---|---|
| 2300 | NON-BUILDING FOUNDATIONS – | | | | | | | | | | | |
| | ARRAY FOUNDATIONS | | | | | | | | | | | |
| | DRILLED PIERS | | | | | | | | | | | |
| | TYPE "A" 12'-0" | Ea | 80 | | 299 | | 8,529 | | 6050 | | 3,230 | |
| | TYPE "B" 15'-0" | Ea | 80 | | 420 | | 11,980 | | 8,144 | | 3,836 | |
| | TYPE "C" & "D" 14'-3" | Ea | 1920 | | 9562 | | 272,750 | | 185,687 | | 86,320 | |
| | TYPE "E" 11'-0" | Ea | 1720 | | 6622 | | 188,888 | | 128,410 | | 57,787 | |
| | TYPE "F" 12'-10" | Ea | 1720 | | 7723 | | 220,293 | | 149,771 | | 61,559 | |
| | TYPE "G" & "H" 11'-6" | Ea | 41,280 | | 165,946 | | 4,733,497 | | 3,221,698 | | 1,334,626 | |
| | | | | | | | | | | | | 10,657,250 |
| | EARTH DISPOSAL | CY | 35,700 | | 3,152 | | 73,041 | | – | | 41,233 | 114,274 |
| | DIST. TERMINAL BOX FOUND. | | | | | | | | | | | |
| | EARTHWORK | | | | | | | | | | | |
| | EXCAVATION | CY | 100 | | 187 | | 4,630 | | – | | | 4,630 |
| | BACKFILL | CY | 405 | | 69 | | 1,709 | | – | | | 1,709 |
| | CONCRETE | CY | 560 | | 1,400 | | 39,934 | | 43,120 | | | 83,054 |
| | WATER TANK FOUNDATION (28') | | | | | | | | | | | |
| | EXCAVATION | CY | 45 | | 8 | | 197 | | – | | | 197 |
| | BACKFILL | CY | 35 | | 8 | | 197 | | – | | | 197 |
| | SAND FILL | CY | 15 | | 3 | | 74 | | 66 | | | 140 |
| | CONCRETE | CY | 13 | | 117 | | 3,337 | | 1931 | | | 5,268 |
| | (CONTINUED) | | | | | | | | | | | |

| ACCOUNT | TYPE EST. | BY | DATE | PAGE |
|---|---|---|---|---|
| 2000 PROJECT CONSTRUCTION | | BWH | 5/82 | 10 |

| JOB NO. | CLIENT | PROJECT | LOCATION |
|---|---|---|---|
| | APS | 100 MW FLATPLATE PV PLANT | REDROCK, AZ. |

| ACCT. NO. | ACCOUNT DESCRIPTION | U/M | QUAN. | LABOR UNIT | LABOR MH | LABOR $/MH | LABOR AMOUNT | MATERIAL UNIT | MATERIAL AMOUNT | OTHER UNIT | OTHER AMOUNT | TOTAL |
|---|---|---|---|---|---|---|---|---|---|---|---|---|
| 2300 | NON-BUILDING FOUNDATIONS – | | | | | | | | | | | |
| | SUBFIELD ELEC. EQUIP FOUND. | | | | | | | | | | | |
| | EARTHWORK: | | | | | | | | | | | |
| | EXCAVATION | | | | | | | | | | | |
| | TRANSFORMERS | CY | 1040 | | 177 | | 4383 | | | | | 4383 |
| | INVERTER SKIDS | CY | 420 | | 71 | | 1757 | | | | | 1,757 |
| | FOOTINGS | | | | | | | | | | | |
| | 3'x3' (2/SUBFIELD) | CY | 57 | | 10 | | 247 | | | | | 247 |
| | 4'x4' (1/SUBFIELD) | CY | 55 | | 9 | | 223 | | | | | 223 |
| | BACKFILL | | | | | | | | | | | |
| | TRANSFORMERS | CY | 308 | | 68 | | 1,683 | | | | | 1,683 |
| | STONE FILL | CY | 165 | | 33 | | 817 | | 1,271 | | | 2,088 |
| | FOOTINGS | | | | | | | | | | | |
| | 3'x3' (2/SF) | CY | 37 | | 8 | | 198 | | | | | 198 |
| | 4'x4' (1/SF) | CY | 20 | | 4 | | 100 | | | | | 100 |
| | CONCRETE: | | | | | | | | | | | |
| | TRANSFORMERS | | | | | | | | | | | |
| | SLAB ON GRADE | CY | 182 | | 455 | | 12,978 | | 14,014 | | | 26,992 |
| | PERIMETER WALLS | CY | 70 | | 420 | | 11,980 | | 7,700 | | | 19,680 |
| | PAD | CY | 90 | | 270 | | 7,701 | | 10,989 | | | 18,690 |
| | INVERTER-SLAB ON GRADE | CY | 380 | | 950 | | 27,098 | | 29,260 | | | 56,358 |
| | FOOTINGS - 3'x3' & 4'x4' | CY | 44 | | 221 | | 6,315 | | 4,286 | | | 10,822 |
| | GUARD POSTS | Ea | 40 | | 40 | | 1,140 | | 772 | | | 1,912 |
| | (CONTINUED) | | | | | | | | | | | |

| ACCOUNT | TYPE EST. | BY | DATE | PAGE |
|---|---|---|---|---|
| 2000 PROJECT CONSTRUCTION | | TWH | 5/82 | 11 |

| JOB NO. | CLIENT | PROJECT | LOCATION |
|---|---|---|---|
| | APS | 100 MW FLATPLATE PV PLANT | RED ROCK, AZ |

| ACCT. NO. | ACCOUNT DESCRIPTION | U/M | QUAN. | LABOR UNIT | LABOR MH | LABOR $/MH | LABOR AMOUNT | MATERIAL UNIT | MATERIAL AMOUNT | OTHER UNIT | OTHER AMOUNT | TOTAL |
|---|---|---|---|---|---|---|---|---|---|---|---|---|
| 2300 | NON-BUILDING FOUNDATIONS- | | | | | | | | | | | |
| | SWITCHYARD ELEC. EQUIPT. FOUND. | | | | | | | | | | | |
| | EARTHWORK: | | | | | | | | | | | |
| | EXCAVATION | | | | | | | | | | | |
| | TRANSFORMER | CY | 100 | | 17 | | 420 | | | | | 420 |
| | SWITCHGEAR | CY | 71 | | 12 | | 297 | | | | | 297 |
| | FOOTINGS | CY | 5 | | 1 | | 24 | | | | | 24 |
| | PAD | CY | 5 | | 1 | | 24 | | | | | 24 |
| | FOOTINGS & PIERS | CY | 12 | | 2 | | 48 | | | | | 48 |
| | PADS (2) | CY | 85 | | 14 | | 347 | | | | | 347 |
| | BACKFILL | | | | | | | | | | | |
| | TRANSFORMER | CY | 15 | | 3 | | 74 | | | | | 74 |
| | SWITCH GEAR | CY | 20 | | 4 | | 100 | | | | | 100 |
| | FOOTINGS | CY | 2 | | 1 | | 24 | | | | | 24 |
| | PAD | CY | 2 | | 1 | | 24 | | | | | 24 |
| | FOOTINGS & PIERS | CY | 5 | | 1 | | 24 | | | | | 24 |
| | PADS (2) | CY | 15 | | 3 | | 74 | | | | | 74 |
| | STONE FILL | | | | | | | | | | | |
| | TRANSFORMER | CY | 59 | | 12 | | 297 | | 454 | | | 751 |
| | PADS (2) | CY | 38 | | 8 | | 197 | | 293 | | | 490 |
| | (CONTINUED) | | | | | | | | | | | |

| ACCOUNT | TYPE EST. | BY | DATE | PAGE |
|---|---|---|---|---|
| 2000 PROJECT CONSTRUCTION | | BWH | 5/82 | 12 |

| JOB NO. | CLIENT | PROJECT | LOCATION |
|---|---|---|---|
| | APS | 100 MW FLATPLATE PV PLANT | RED ROCK, AZ. |

| ACCT. NO. | ACCOUNT DESCRIPTION | U/M | QUAN. | LABOR UNIT | LABOR MH | LABOR $/MH | LABOR AMOUNT | MATERIAL UNIT | MATERIAL AMOUNT | OTHER UNIT | OTHER AMOUNT | TOTAL |
|---|---|---|---|---|---|---|---|---|---|---|---|---|
| 2300 | NON-BUILDING FOUNDATIONS - | | | | | | | | | | | |
| | SWITCHYARD ELEC. EQUPT. FOUND. | | | | | | | | | | | |
| | CONCRETE: | | | | | | | | | | | |
| | SWITCHGEAR PAD | CY | 65 | | 195 | | 5,562 | | 7937 | | | 13,499 |
| | FOOTINGS | CY | 4 | | 20 | | 570 | | 387 | | | 957 |
| | PAD | CY | 3 | | 9 | | 257 | | 366 | | | 623 |
| | TRANSFORMER | | | | | | | | | | | |
| | SLAB ON GRADE | CY | 21 | | 53 | | 1,512 | | 1,617 | | | 3,129 |
| | WALLS | CY | 8 | | 48 | | 1,369 | | 880 | | | 2,249 |
| | PAD | CY | 25 | | 75 | | 2,139 | | 3,053 | | | 5,192 |
| | FOOTINGS & PIERS | CY | 8 | | 40 | | 1,141 | | 774 | | | 1,915 |
| | OTHER PADS | | | | | | | | | | | |
| | SLAB ON GRADE | CY | 12 | | 30 | | 856 | | 924 | | | 1,780 |
| | WALLS | CY | 9 | | 54 | | 1,540 | | 990 | | | 2,530 |
| | PAD | CY | 15 | | 45 | | 1,284 | | 1,832 | | | 3,116 |
| | TOTAL | | | | | | | | | | | 11,049,563 |

| ACCOUNT | TYPE EST. | BY | DATE | PAGE |
|---|---|---|---|---|
| 2000 PROJECT CONSTRUCTION | | R.WH | 5/82 | 13 |

| JOB NO. | CLIENT | PROJECT | LOCATION |
|---|---|---|---|
| | APS | 100 MW FLATPLATE PV PLANT | RED ROCK, AZ. |

| ACCT. NO. | ACCOUNT DESCRIPTION | U/M | QUAN. | LABOR UNIT | LABOR MH | LABOR $/MH | LABOR AMOUNT | MATERIAL UNIT | MATERIAL AMOUNT | OTHER UNIT | OTHER AMOUNT | TOTAL |
|---|---|---|---|---|---|---|---|---|---|---|---|---|
| 2401 | ARRAY INSTALLATION | | | | | | | | | | | |
| | | | | | | | | | | | | |
| | ERECT & SECURE | ea | 45,000 | | | | 2,737,339 | | | | 1,412,730 | 4,150,069 |
| | | | | | | | | | | | | |
| | PV FLATPLATE ARRAY | ea | 810,000 | | | | | | (*) | | | (*) |
| | | | | | | | | | | | | |
| | TOTAL | | | | | | | | | | | (*) 4,150,069 |

(*) DEPENDS ON PARAMETRIC VALUES

| ACCOUNT | TYPE EST. | BY | DATE | PAGE |
|---|---|---|---|---|
| 7000 PROJECT CONSTRUCTION | | DWH | 5/92 | 14 |

| JOB NO. | CLIENT | PROJECT | LOCATION |
|---|---|---|---|
| | APS | 100 MW FLATPLATE PV PLANT | RIO-ROK, AZ |

| ACCT. NO. | ACCOUNT DESCRIPTION | U/M | QUAN. | LABOR UNIT | LABOR MH | LABOR $/MH | LABOR AMOUNT | MATERIAL UNIT | MATERIAL AMOUNT | OTHER UNIT | OTHER AMOUNT | TOTAL |
|---|---|---|---|---|---|---|---|---|---|---|---|---|
| 2403 | POWER CONDITIONING | | | | | | | | | | | |
| | INVERTER, 5MW | Ea | 20 | | | | | | (*) | | | (*) |
| | 2/34.5 KV STEPUP X-FORMER (INCLUDING CURRENT X-FORMER) | Ea | 20 | | | | | | 612,865 | | | 612,865 |
| | POTENTIAL TRANSFORMERS | Ea | 60 | | | | | | 289,872 | | | 289,872 |
| | INSTALLATION & CHECK OUT | | | | 3200 | | 162,550 | | | | | 162,550 |
| | TOTAL | | | | | | | | | | | (*) 1,065,287 |
| | (*) DEPENDS ON PARAMETRIC VALUES | | | | | | | | | | | |

| ACCOUNT | TYPE EST. | BY | DATE | PAGE |
|---|---|---|---|---|
| 2010 PROJECT CONSTRUCTION | REV. A | [illegible] | 5/92 | 15 |

| JOB NO. | CLIENT | PROJECT | LOCATION |
|---|---|---|---|
| | APS | 100 MW FLATPLATE PV PLANT | PEDIOK, AZ |

| ACCT. NO. | ACCOUNT DESCRIPTION | U/M | QUAN. | LABOR UNIT | LABOR MH | LABOR $/MH | LABOR AMOUNT | MATERIAL UNIT | MATERIAL AMOUNT | OTHER UNIT | OTHER AMOUNT | TOTAL |
|---|---|---|---|---|---|---|---|---|---|---|---|---|
| 2404 | ELECTRICAL SYSTEMS | | | | | | | | | | | |
| | DC DISTRIBUTION TERM. BOX | Ea | 440 | | 53,842 | | 1,929,437 | | 851,845 | | 79,584 | 2,860,866 |
| | WEATHER HEAD - 2" | Ea | 8,100 | | 20,260 | | 724,207 | | 65,331 | | – | 789,538 |
| | 2" RGS, 10'-0" LONG | LF | 81,000 | | 22,360 | | 799,412 | | 205,691 | | 2042 | 1,007,145 |
| | 2" RGS ELBOW, 30° SWEEP | Ea | 8,100 | | 10,540 | | 376,664 | | 468,292 | | 10,208 | 855,164 |
| | ARMOR BOX ADAPTER | Ea | 9,000 | | 13,500 | | 482,591 | | 36,482 | | 9,601 | 528,674 |
| | GROUND ROD | Ea | 200 | | 240 | | 8,641 | | 249 | | 19 | 8,909 |
| | WIRE & CABLE | | | | | | | | | | | |
| | DC POWER CABLING W/GND | | | | | | | | | | | |
| | #8 AWG, 2/C, 2KV | LF | 3,800,000 | | 60,800 | | 2,713,373 | | 5236,704 | | 17,354 | 7,967,431 |
| | #4/0 AWG, 3/C, 2KV | LF | 130,000 | | 11,180 | | 399,642 | | 1,011,868. | | 6,380 | 1,417,890 |
| | AC POWER CABLING | | | | | | | | | | | |
| | 34.5 POWER, 3/C, #1/0 | LF | 100,000 | | 4,000 | | 142,985 | | 1,122,880 | | 4560 | 1,270,425 |
| | 115 KV TRANSMISSION LN. | LF | 10,560 | | 1,253 | | 44,790 | | 142,912 | | | 187,702 |
| | INSTRUMENTATION/FIELD CABLE | | | | | | | | | | | |
| | 1-TSP #16 AWG, ARMORED | LF | 2000 | | 18 | | 640 | | 1,353 | | – | 1,993 |
| | 3/C #12 AWG, SHIELDED, ARMORED | LF | 3,000 | | 42 | | 1,504 | | 2,794 | | 38 | 4,336 |
| | 4/C #10 AWG, " " | LF | 2,000 | | 40 | | 1,432 | | 3,292 | | 128 | 4,852 |
| | 2/C #12 AWG, " " | LF | 5,000 | | 55 | | 1,968 | | 4,083 | | 64 | 6,115 |
| | 2/C #10 AWG, " " | LF | 2,000 | | 36 | | 1,288 | | 2,756 | | 51 | 4,095 |
| | 3/C #12 AWG, SHIELDED | LF | 1,000 | | 14 | | 496 | | 931 | | 13 | 1,440 |
| | 4/C #10 AWG, " | LF | 1,000 | | 20 | | 712 | | 1,696 | | 64 | 2,422 |
| | 2/C #12 AWG, " | LF | 2,000 | | 22 | | 784 | | 1,633 | | 26 | 2,443 |
| | 2/C #10 AWG, " | LF | 1,000 | | 18 | | 640 | | 1,365 | | 26 | 2,031 |
| | 1-TPS #16 AWG, ARMORED | LF | 122,000 | | 1098 | | 14,522 | | 292,193 | | – | 306,715 |
| | (CONTINUED) | | | | | | | | | | | |

| ACCOUNT | TYPE EST. | BY | DATE | PAGE |
|---|---|---|---|---|
| 2000 PROJECT CONSTRUCTION | REV A. | [illegible] | 5/82 | 16 |

| JOB NO. | CLIENT | PROJECT | LOCATION |
|---|---|---|---|
| | APS | 100 MW FLATPLATE PV PLANT | RED ROCK, AZ. |

| ACCT. NO. | ACCOUNT DESCRIPTION | U/M | QUAN. | LABOR UNIT | LABOR MH | LABOR $/MH | LABOR AMOUNT | MATERIAL UNIT | MATERIAL AMOUNT | OTHER UNIT | OTHER AMOUNT | TOTAL |
|---|---|---|---|---|---|---|---|---|---|---|---|---|
| 2404 | (CONTINUED) | | | | | | | | | | | |
| | 35 KV CABLE SPLICE | ea | 60 | | 390 | | 13,945 | | 14,929 | | 447 | 29,321 |
| | CABLE/WIRE TERMINATIONS | ea | 90,305 | | 18,061 | | 645,610 | | 23,963 | | 12,888 | 681,466 |
| | CHECK OUT & TEST | | | | 7,615 | | 272,210 | | 21,692 | | 10,846 | 304,748 |
| | TRENCH PLANKING | LF | 3,405,760 | | 34,058 | | 1,217,447 | | 2,607,449 | | 29,029 | 3,853,925 |
| | LIGHTING | | | | 100 | | 3,576 | | 10,017 | | 140 | 13,733 |
| | GROUNDING | | | | 136 | | 4,864 | | 1,659 | | 191 | 6,714 |
| | 34.5/115 KV SWITCH YARD | | | | | | | | | | | |
| | 34.5 KV SWITCH GEAR | ea | 1 | | 1,342 | | 48,003 | | 727,320 | | — | 775,323 |
| | 34.5 KV VERTICAL BREAK AIR SW | ea | 1 | | 78 | | 2,800 | | 8,932 | | — | 11,732 |
| | 34.5 KV POWER CIRCUIT BREAKER | ea | 1 | | 280 | | 10,001 | | 31,900 | | - | 41,901 |
| | 115 KV CIRCUIT SWITCHER | ea | 1 | | 269 | | 9,601 | | 30,624 | | - | 40,225 |
| | LOAD CONTROL/MOTOR CONTROL CTR | ea | 1 | | 376 | | 13,473 | | 204,160 | | - | 217,633 |
| | 115/34.5 KV MAIN TRANSFORMER | ea | 1 | | 1,107 | | 39,579 | | 599,720 | | - | 639,299 |
| | 34.5/4.16 KV GROUNDING X-FORMER | ea | 1 | | 120 | | 4,288 | | 77,236 | | 172 | 81,696 |
| | 115 KV VOLTAGE TRANSFORMER | ea | 3 | | 252 | | 9,001 | | 28,710 | | - | 37,711 |
| | STEEL STRUCTURES | ea | 1 | | 392 | | 14,001 | | 20,735 | | - | 34,736 |
| | CHECK OUT & TEST | | | | 120 | | 4,286 | | 345 | | 6,042 | 10,673 |
| | MISC. ELEC. EQUIPMENT | | | | 109 | | 3,888 | | 1,965 | | 6 | 5,859 |
| | 115 KV BAY ADDITION | | | | | | | | | | | |
| | 115 KV STEEL STRUCTURE | | | | | | | | | | | 27,000 |
| | 115 KV BUS WORK | | | | | | | | | | | 12,000 |
| | SUSPENSION INSULATOR DE ASSY | | | | | | | | | | | 5,400 |
| | 115 KV AIR SWITCHES | | | | | | | | | | | 17,000 |
| | 115 KV AIR SW W/GND BLADES | | | | | | | | | | | 12,000 |
| | (CONTINUED) | | | | | | | | | | | |

| ACCOUNT | TYPE EST. | BY | DATE | PAGE |
|---|---|---|---|---|
| 2000 PROJECT CONSTRUCTION | REV. A | RWH | 5/82 | 17 |

| JOB NO. | CLIENT | PROJECT | LOCATION |
|---|---|---|---|
| | APS | 100 MW FLATPLATE PV PLANT | RED ROCK, AZ. |

| ACCT. NO. | ACCOUNT DESCRIPTION | U/M | QUAN. | LABOR UNIT | LABOR MH | LABOR $/MH | LABOR AMOUNT | MATERIAL UNIT | MATERIAL AMOUNT | OTHER UNIT | OTHER AMOUNT | TOTAL |
|---|---|---|---|---|---|---|---|---|---|---|---|---|
| 2404 | (CONTINUED) | | | | | | | | | | | |
| | 115 KV PWR. CKT. BREAKER | | | | | | | | | | | 52,000 |
| | BARE ALUM. CONDUCTOR | | | | | | | | | | | 1,000 |
| | SHIELDED CONTROL CABLE | | | | | | | | | | | 5,000 |
| | POWER CABLE | | | | | | | | | | | 1,000 |
| | CONDUIT | | | | | | | | | | | 1,000 |
| | FOUNDATIONS | | | | | | | | | | | 37,000 |
| | EARTH WORK | | | | | | | | | | | 2,000 |
| | GROUNDING | | | | | | | | | | | 1,500 |
| | CONTROL, METERING, RELAYING | | | | | | | | | | | 22,600 |
| | MAC SIGNS | | | | | | | | | | | 500 |
| | PAY ADDITION - TOTAL | | | | 2005 | | 44,800 | | 179,200 | | | |
| | O/H & FEE | | | | | | 26,985 | | 49,459 | | | 76,344 |
| | | | | | | | | | | | | 24,517,225 |

| ACCOUNT | TYPE EST. | BY | DATE | PAGE |
|---|---|---|---|---|
| 2000 PROJECT CONSTRUCTION | | RWH | 5/92 | 18 |

| JOB NO. | CLIENT | PROJECT | LOCATION |
|---|---|---|---|
| | APS | 100 MW FLATPLATE PV PLANT | RED ROCK, AZ |

| ACCT. NO. | ACCOUNT DESCRIPTION | U/M | QUAN. | LABOR UNIT | LABOR MH | LABOR $/MH | LABOR AMOUNT | MATERIAL UNIT | MATERIAL AMOUNT | OTHER UNIT | OTHER AMOUNT | TOTAL |
|---|---|---|---|---|---|---|---|---|---|---|---|---|
| 2407 | INSTRUMENTATION, CONTROL, | | | | | | | | | | | |
| | AND DISPLAY (ICADS) | | | | | | | | | | | |
| | GRAPHIC DISPLAY CRT'S | ea | 3 | | | | | | 28,991 | | | 28,991 |
| | CENTRAL COMPUTER | | | | | | | | | | | |
| | GRAPHICS TERMINAL | ea | 1 | | | | | | 3,258 | | | 3,258 |
| | LINE PRINTER | ea | 1 | | | | | | 8,723 | | | 8,723 |
| | MODEMS (ICADS/FIELD) | ea | 42 | | | | | | 24,948 | | | 24,948 |
| | RACKS (MODEMS & DAU) | ea | 1 | | | | | | 6,033 | | | 6,033 |
| | MODEMS CABLES | ea | 21 | | | | | | 1,042 | | | 1,042 |
| | SOFTWARE | | | | | | | | | | | |
| | FORTRAN 77 | ea | 1 | | | | | | 2,835 | | | 2,835 |
| | GRAPHICS | ea | 1 | | | | | | 1,386 | | | 1,386 |
| | I/O EXPANDER | ea | 1 | | | | | | 4,202 | | | 4,202 |
| | HOST COMPUTER (HP1000/65) | ea | 1 | | | | | | 21,024 | | | 21,024 |
| | SYSTEM CONSOLE | ea | 1 | | | | | | 6,354 | | | 6,354 |
| | MEMORY | ea | 1 | | | | | | 4,599 | | | 4,599 |
| | SERIAL MULTIPLEXERS | ea | 3 | | | | | | 5,160 | | | 5,160 |
| | JAGUARO DISPATCH INTERFACE | ea | 1 | | | | | | 44,000 | | | 44,000 |
| | DATA ACQUISITION UNIT | ea | 1 | | | | | | 7,455 | | | 7,455 |
| | DATA STORAGE | ea | 1 | | | | | | 9,950 | | | 9,950 |
| | (CONTINUED) | | | | | | | | | | | |

| ACCOUNT | TYPE EST. | BY | DATE | PAGE |
|---|---|---|---|---|
| 2000 PROJECT CONSTRUCTION | | PINK | 5/92 | 19 |

| JOB NO. | CLIENT | PROJECT | LOCATION |
|---|---|---|---|
| | APS | 100 MW FLATPLATE PV PLANT | KOMATKE AZ |

| ACCT. NO. | ACCOUNT DESCRIPTION | U/M | QUAN. | LABOR UNIT | LABOR MH | LABOR $/MH | LABOR AMOUNT | MATERIAL UNIT | MATERIAL AMOUNT | OTHER UNIT | OTHER AMOUNT | TOTAL |
|---|---|---|---|---|---|---|---|---|---|---|---|---|
| 2407 | ICADS (CONTINUED) | | | | | | | | | | | |
| | WIND SPEED INDICATOR | Ea | 20 | | | | | | 18,000 | | | 18,000 |
| | ICADS SOFTWARE AND HARDWARE DESIGN | | | | 13,280 | | 462,141 | | | | | 462,141 |
| | WEATHER STATION | | | | | | | | 13,128 | | | 13,128 |
| | UPS | | | | | | | | | | 40,150 | 40,150 |
| | INSTALL & CHECK OUT | | | | 4,150 | | 210,820 | | | | | 210,820 |
| | TOTAL | | | | | | | | | | | 924,199 |

| ACCOUNT | TYPE EST. | BY | DATE | PAGE |
|---|---|---|---|---|
| 2000 PROJECT CONSTRUCTION | | BWH | 5/82 | 20 |

| JOB NO. | CLIENT | PROJECT | LOCATION |
|---|---|---|---|
| | APS | 100 MW FLATPLATE PV PLANT | RED ROCK AZ. |

| ACCT. NO. | ACCOUNT DESCRIPTION | U/M | QUAN. | LABOR UNIT | LABOR MH | LABOR $/MH | LABOR AMOUNT | MATERIAL UNIT | MATERIAL AMOUNT | OTHER UNIT | OTHER AMOUNT | TOTAL |
|---|---|---|---|---|---|---|---|---|---|---|---|---|
| 2408 | SAFTY/SECURITY | | | | | | | | | | | |
| | FIRE PROTECTION | | | | | | | | | | | |
| | HALON 1301 SYSTEM | ea | 1 | | | | | | | | 10,000 | 10,000 |
| | FIRE DETECTORS | | | | | | | | | | | |
| | WAREHOUSE | ea | 15 | | | | | | | | 3,500 | 3,500 |
| | VISITOR CENTER | ea | 2 | | | | | | | | 500 | 500 |
| | MULTIZONE FIRE PROTECT. | ea | 1 | | | | | | | | 1,500 | 1,500 |
| | PORTABLE FIRE EXTINGUISHER | | | | | | | | | | | |
| | PCU | ea | 40 | | | | | | | | 4,000 | 4,000 |
| | 34.5/115 KV SWITCH YARD | ea | 1 | | | | | | | | 600 | 600 |
| | CONTROL BUILDING | ea | 3 | | | | | | | | 240 | 240 |
| | WAREHOUSE | ea | 4 | | | | | | | | 600 | 600 |
| | VISITOR CENTER | | | | | | | | | | | |
| | HVAC ROOM | ea | 1 | | | | | | | | 150 | 150 |
| | OTHER AREAS | ea | 2 | | | | | | | | 250 | 250 |
| | SAFTY | | | | | | | | | | | |
| | FIRST AID KIT | ea | 23 | | | | | | 1,200 | | | 1,200 |
| | EYE WASH | ea | 3 | | | | | | | | 750 | 750 |
| | EMERGENCY SHOWER | ea | 3 | | | | | | | | 825 | 825 |
| | GUARD SERVICE | | | | | | 50,960 | | | | | 50,960 |
| | TOTAL | | | | | | | | | | | 75,075 |

| ACCOUNT | TYPE EST. | BY | DATE | PAGE |
|---|---|---|---|---|
| 2000 PROJECT CONSTRUCTION | | BWH | 5/82 | 21 |

| JOB NO. | CLIENT | PROJECT | LOCATION |
|---|---|---|---|
| | APS | 100 MW FLAT PLATE PV PLANT | FEDBOK AZ |

| ACCT. NO. | ACCOUNT DESCRIPTION | U/M | QUAN. | LABOR UNIT | LABOR MH | LABOR $/MH | LABOR AMOUNT | MATERIAL UNIT | MATERIAL AMOUNT | OTHER UNIT | OTHER AMOUNT | TOTAL |
|---|---|---|---|---|---|---|---|---|---|---|---|---|
| 2501 | FURNITURE ALLOWANCE | | | | | | | | | | 21,000 | 21,000 |
| 2503 | ADDITION TO EXISTING CONTROL BUILDING, INCLUDING DEMOLITION | SF | 1,300 | | 1,453 | | 41,025 | | 42,790 | | — | 83,815 |
| 2504 | FIELD CONTROL BUILDING | SF | 1,644 | | 1,612 | | 45,540 | | 45,100 | | — | 90,640 |
| 2508 | VISITOR CENTER | SF | 2,715 | | 3,600 | | 96,126 | | 87,822 | | 63,428 | 247,376 |
| 2509 | WAREHOUSE/MAINTAINANCE BLDG. | SF | 13,200 | | 1,427 | | 38,707 | | 32,667 | | 154,731 | 226,105 |

| ACCOUNT | TYPE EST. | BY | DATE | PAGE |
|---|---|---|---|---|
| 2000 PROJECT CONSTRUCTION | | BWH | 5/82 | 22 |

| JOB NO. | CLIENT | PROJECT | LOCATION |
|---|---|---|---|
| | APS | 100 MW FLATPLATE PV PLANT | RED ROCK, AZ. |

| ACCT. NO. | ACCOUNT DESCRIPTION | U/M | QUAN. | LABOR UNIT | LABOR MH | LABOR $/MH | LABOR AMOUNT | MATERIAL UNIT | MATERIAL AMOUNT | OTHER UNIT | OTHER AMOUNT | TOTAL |
|---|---|---|---|---|---|---|---|---|---|---|---|---|
| 2711 | MAINTAINANCE VEHICLES/MATERIAL HANDLING EQUIPMENT – | | | | | | | | | | | |
| | 5-TON STAKE BED TRUCK | ea | 7 | | | | | | | 16,500 | 115,500 | 115,500 |
| | 3/4 TON VAN | ea | 1 | | | | | | | 11,000 | 11,000 | 11,000 |
| | TOTAL | | | | | | | | | | | 126,500 |
| 2712 | MAINTAINANCE TOOLS & EQUIPMENT | | | | | | | | | | | |
| | WASHWATER SYSTEM | | | | | | | | | | | |
| | 75,000 GAL. TANK | | | | | | | | | | 85,800 | 85,800 |
| | PIPING (4") | LF | 8500 | | 8925 | | 334,863 | | 136,510 | | | 471,373 |
| | EXCAVATION | CY | 2,805 | | 701 | | 17,364 | | | | | 17,364 |
| | BACK FILL | CY | 2,475 | | 817 | | 20,223 | | | | | 20,223 |
| | ARRAY WASHING SYSTEM | | | | | | | | | | | |
| | TANK, 300 GAL. | ea | 7 | | | | | | 2,380 | | | 2,380 |
| | HOTSY WASHING UNIT | ea | 7 | | 56 | | 2,189 | | 61,404 | | | 63,593 |
| | TEST EQUIPMENT | | | | | | | | | | | |
| | SCOPE - HP1741A | ea | 2 | | | | | | 11,220 | | | 11,220 |
| | DVM - HP 3435 A | ea | 10 | | | | | | 5,775 | | | 5,775 |
| | I-V TESTER W/HP & HP85 | ea | 1 | | | | | | 15,620 | | | 15,620 |
| | (CONTINUED) | | | | | | | | | | | |

| ACCOUNT | TYPE EST. | BY | DATE | PAGE |
|---|---|---|---|---|
| 2000 PROJECT CONSTRUCTION | | FWH | 5/82 | 23 |

| JOB NO. | CLIENT | PROJECT | LOCATION |
|---|---|---|---|
| | APS | 100 MW FLATPLATE PV PLANT | RED ROCK, AZ |

| ACCT. NO. | ACCOUNT DESCRIPTION | U/M | QUAN. | LABOR UNIT | LABOR MH | LABOR $/MH | LABOR AMOUNT | MATERIAL UNIT | MATERIAL AMOUNT | OTHER UNIT | OTHER AMOUNT | TOTAL |
|---|---|---|---|---|---|---|---|---|---|---|---|---|
| 2712 | (CONTINUED) | | | | | | | | | | | |
| | TOOL KITS | | | | | | | | | | | |
| | ELECTRICAL | ea | 5 | | | | | | 22,000 | | | 22,000 |
| | MECHANICAL | ea | 5 | | | | | | 14,850 | | | 14,850 |
| | MAINTAINANCE EQUIPMENT | | | | | | | | | | | |
| | WELDER | ea | 1 | | | | | | 3,000 | | | 3,000 |
| | AIR TOOLS | ea | 1 | | | | | | 5,000 | | | 5,000 |
| | FORK LIFT | ea | 1 | | | | | | 35,000 | | | 35,000 |
| | COMPRESSOR | ea | 1 | | | | | | 10,000 | | | 10,000 |
| | DRILL PRESS | ea | 1 | | | | | | 2,000 | | | 2,000 |
| | MISC. (ALLOWANCE) | ea | 1 | | | | | | 10,000 | | | 10,000 |
| | TOTAL | | | | | | | | | | | 795,198 |

| ACCOUNT | TYPE EST. | BY | DATE | PAGE |
|---|---|---|---|---|
| 2000 PROJECT CONSTRUCTION | REV. A | BWH | 5/82 | 24 |

| JOB NO. | CLIENT | PROJECT | LOCATION |
|---|---|---|---|
| | APS | 100 MW FLATPLATE PV PLANT | RED BUTTE AZ |

| ACCT. NO. | ACCOUNT DESCRIPTION | U/M | QUAN. | LABOR UNIT | LABOR MH | LABOR $/MH | LABOR AMOUNT | MATERIAL UNIT | MATERIAL AMOUNT | OTHER UNIT | OTHER AMOUNT | TOTAL |
|---|---|---|---|---|---|---|---|---|---|---|---|---|
| 2911 | LABOR ADJUSTMENT FOR REMOTE AREA | | | | | | 2,338,112 | | | | | 2,338,112 |
| 2912 | EQUIPMENT ADJUSTMENT FOR REMOTE AREA | | | | | | | | | | 357,848 | 357,848 |
| 2920 | CONTINGENCY | | | | | | | | | | | 8,876,273 |

## APPENDIX B - SYSTEM SPECIFICATION

The characteristics of the concentrator array PV CPS are delineated in this Appendix. The intent of this system specification is to translate generic design requirements into specific and meaningful design criteria. These criteria could be utilized to obtain detailed construction specifications upon which equipment procurement, construction subcontracts and overall plant construction management could be based. Subsystem (i.e., PCU and ICADS) and major component specifications appear in the following Appendix.

## 1.0 SCOPE

### 1.1 PURPOSE

This document defines the system requirements for a photovoltaic central power station (CPS) utilizing flat plate photovoltaic collectors.

### 1.2 GENERAL

This document defines the requirements for the design of the CPS featuring concentrating photovoltaic collectors, the interconnecting field wiring, the control system and the power conditioning equipment.

## 2.0 APPLICABLE DOCUMENTS

### 2.1 GENERAL

The following documents of the exact issue shown shall form a part of this specification to the extent specified herein. When an exact issue is not specified, the applicable issue shall be the issue in effect on 6 January 1983. In case of conflict between the requirements of this specification and any reference document, the requirements of this specification shall govern.

#### 2.1.1 U. S. Specifications

OSHA Act of 1970, Occupational Safety and Health Standards

#### 2.1.2 Industry Specifications

| | |
|---|---|
| A58.1-1972 | ANSI Design Loads |
| UBC | Uniform Building Code, 1979 (ICBO) |
| NBC | National Fire Code, 1980 (NFPA) |
| NEC | National Electrical Code, 1981 |
| AISC | Manual of Steel Construction (AISC) |

Standards of ASTM (American Society of Testing Materials) Interim Standard for Safety: Flat Plate Photovoltaic Modules and Panels (Vols. 1 and 2 Flat Plate Solar Array Project/JPL). Interim Performance Criteria for Photovoltaic Energy Systems (SERI/TR-742-654) 12/80.

Block V Solar Cell Module Specification, Applicable Sections, JPL/5101-161, 1981.

## 3.0 REQUIREMENTS

The photovoltaic central power station shall meet the following requirements.

### 3.1 SYSTEM

#### 3.1.1 Definition

The photovoltaic central power station (CPS) shall supply power to the APS power grid in cogeneration with the existing power generating facility. Power shall be supplied, as available, by the photovoltaic and associated power conditioning equipment.

#### 3.1.2 Site Location

The system will be located directly north of the Saguaro Power Plant in southern Arizona. Site latitude is 32.5°N and longitude, 111°, 18 min, West.

3.1.2.1 Environment - Table 3.1 lists the typical environmental characteristics for the site.

3.1.2.2 Access - Access to the site will be via road and rail. This access will be provided by Arizona Public Service.

#### 3.1.3 Electrical Output

The CPS shall be sized to deliver 100 MW ac power to the power grid under the following conditions.

a. Newly installed system with clean optical services on modules;
b. 1000 $W/m^2$ direct normal insolation at air mass of 1.5 spectrum;
c. 20°C ambient air temperature;
d. 3 m/s or greater wind speed.

#### 3.1.4 Energy Output

As a design goal, the CPS shall deliver a minimum of 275,000 megawatt hours of energy to the power grid per year. This goal is based upon the hourly solar resource defined by SOLMET-TMY data for Phoenix, Arizona.

#### 3.1.5 System Availability

The CPS shall delivery power to the grid with an availability of .95 based upon direct normal insolation of 300 $W/m^2$ or greater.

#### 3.1.6 Configuration

The CPS shall consist of all subsystems required to generate, power condition, control, and instrument the CPS. These subsystems are:

a. PVPS (Photovoltaic Power System)

   1. the solar array field

   2. power conditioning equipment including static inverters and high voltage transformers

b. acES (ac Electrical System)

c. ICADS (Instrumentation, Control and Display System)

d. PFAS (Plant facilities and services)

In addition, the array field and the power conditioning equipment shall be divided into twenty (20) independent subfields. Each subfield shall be optimized to deliver 5.0 megawatts of ac power to the grid under the conditions defined in paragraph 3.1.3.

Table 3.1 Site Characteristics - Saguaro Power Plant

| | |
|---|---|
| Annual Average Insolation (Mean Daily, Total) | 7.5 kWhr/$m^2$ |
| Annual Average Insolation (Mean Daily, Direct Normal | 7.2 kWhr/$m^2$ |
| Elevation | 589 m above sea level |
| Latitude/Longitude | 32°, 33' N/111° 17' W |
| Average Precipitation | 282 mm |
| Average Snowfall | Trace |
| Wet Season | Months 7-9/12/4 |
| Dry Season | Months 10-11/4-6 |
| Average of Maximum Temperature | 27.5°C |
| Highest ever Temperature | 44.4°C |
| Average of Minimum Temperature | 12.3°C |
| Lowest Ever Temperature | -14.4°C |
| Temperature Range (Summer) | 23.3 - 36.7°C |
| Temperature Range (Winter) | 3.3 - 17.8°C |
| Relative Humidity (Summer) | 33% (11:00 a.m.) |
| Relative Humidity (Winter) | 40% (11:00 a.m.) |
| Frost Depth | Negligible |
| Soil Classification | Clayey sand, sandy & silty clays |
| Vegetation | Creosote bus, palo verde, cacti & various grasses & brushes |
| Wind (Maximum Speed) | 31.7 m/s |
| Soil Resistivity | 55.5 Ohm-meter at 0.46 m depth |
| Isokeraunic Level | Approx. 30 Thunderstorm-days/Year |
| N-S Slope, % | 0% |
| E-W Slope, % | 1% |
| Max. Safe Soil Bearing Pressure | 192 kPa |

## 3.2 DESIGN REQUIREMENTS

### 3.2.1 General

The system design shall emphasize simplicity for easy of maintainability. The system design shall address not only those issues pertinent to the photovoltaic power system but issues involved in a conventional power generation system such as system reliability, lifetime, safety, lightning protection, thermal effects, and weathering effects.

### 3.2.2 Equipment and Circuit Identification

Equipment, connectors, and wiring shall be uniquely identified according to a numbering and labeling scheme. The identification shall be concise and readily correlated with function and corresponding documentation. It shall also lend itself to computer processing and support. Equipment units shall clearly be identified on the front surface, and the interior surface of the service door and opening shall contain a logo with a schematic or physical representation of the unit to facilitate servicing. Labels shall be affixed to both ends of power, signal and data cables. Power cables shall be readily distinguished from signal and data cables. A color-coding system shall be used on all power cables.

### 3.2.3 Enclosures

Equipment units shall be enclosed in metal cabinets to provide protection and safety. Switches and controls shall be positioned and/or enclosed so as to minimize the risk of inadvertent or unauthorized operation.

### 3.2.4 Dust Considerations

There shall be provisions and procedures for periodic dust removal from junction boxes and filters inside equipment.

### 3.2.5 Temperature Limits

All elements of the PVPS shall be designed to operate within the expected temperature range. For array field elements, the expected ambient temperature range shall be the maximum and minimum temperature limits (highest ever and lowest ever) with additional margins of 5°C (see Table 3.1). For elements housed within buildings or enclosures, the worst-case ambient temperature limits shall be determined as part of the thermal analyses required for each major element or cabinet. All electronics and other elements of the PVPS within the building or enclosures shall be capable of normal operation at temperatures 7°C above and 10°C below the expected range of ambient temperatures as determined by thermal analyses. In addition, all elements shall be capable of proper operation immediately after turn-on and before thermal equilibrium is reached.

3.2.6 Work Life Goal

The system shall be designed and fabricated to have a useful life of 30 years and, with maintenance, be available for at least 95% of the time during that period.

3.2.7 Materials

All material and devices incorporated into the PVPS power system shall be top of the line industrial quality and shall meet or exceed applicable Occupational Safety and Health Administration (OSHA) standards. Maximum use shall be made of electrical equipment having Underwriters Laboratory or Factory Mutual approval. To the extent applicable, electrical equipment shall meet National Electrical Manufacturers Association specifications.

3.2.8 Characteristics

The design shall emphasize ease of operation and maintenance by on-site personnel with system comprehension limited to that provided by the manuals supplied. Desirable characteristics should include but are not limited to the following:

a. visual comprehension
b. simple troubleshooting
c. plug-in replacement modules
d. minimum operator attendance
e. audible or visual fault indicators
f. self-test features
g. easy cleaning from dust

3.2.9 Overvoltage Protection

Electronic devices or subsystems which use DC power shall incorporate elements to provide overvoltage protection on each dc power supply line. The protection devices shall protect the electronic circuits by limiting overvoltage excursions and shall cause the appropriate breaker or remote control switch to open in the event of an overvoltage condition.

3.2.10 System Grounding

All subsystems shall be connected to earth ground at a single point through a non-current carrying conductor.

3.2.11 Workmanship

All areas of work covered by this specification shall meet those standards specified herein which are generally accepted within the applicable U.S. industry in terms of workmanship and quality of product.

3.2.12 Emergency Shutdown

Emergency shutdown of each CPS subfield shall be provided by a single switch which shall cause the disconnection of the array field and main inverter from the dc bus and disable further automatic control of the system until appropriate manual reset procedures have been accomplished. In addition to the overall subfield shutdown, there shall also be individual emergency shutdown switches for the array field, and the inverter. All emergency shutdown switches shall be operable whether or not automatic control is enabled. The switches shall be positioned to minimize changes for inadvertent operation. For emergency shutdowns, there shall be an audible alarm and latched visual indication identifying the source of the shutdown. The system shall remain latched in the shutdown mode until appropriate manual resets have been performed. Specific criteria for emergency shutdown shall include but not be limited to:

a. system voltage/current
b. automatic control failure
c. loss of control response in selected critical components
d. operation of fire detectors

3.3 SUBSYSTEM FUNCTIONAL REQUIREMENTS

The CPS system, which is shown in block form in Figure 3.3, consists of the subsystems detailed in paragraph 3.1.6. Each subsystem shall conform to the following requirements.

3.3.1 Solar Array Field

The 100 megawatt CPS system shall be divided into twenty (20) independent subfields. The photovoltaics for each subfield shall be capable of delivering to the photovoltaic dc bus a minimum peak power of 5.18 megawatt dc under the ambient conditions defined in paragraph 3.1.3.

3.3.1.1 Source Circuits - The individual arrays shall be electrically connected in series to make up a nominal bus voltage of 1955 Vdc at the maximum power point (at nominal conditions: 1000 $W/m^2$ direct normal, 71°C cell temperature). The interconnecting scheme shall be such that the midpoint of this bus is center tapped and connected to earth ground. This center tapped conductor is a non-current carrying conductor. This configuration will define the $\pm$ 980.6 Vdc bus that supplies photovoltaic power to the inverter.

3.3.1.1.1 Isolation Diodes - Each source circuit shall electrically isolated (positive and negative line) from the dc bus by a series diode. The purpose of this isolation is to protect the dc bus in the event of a fault in any of the source circuits. These diodes shall be rated at a minimum of 125% of the maximum bus voltage and current.

3.3.1.1.2 Mismatch - The mismatch resulting from operating combinations of series solar cell sources in parallel with other sources shall be limited to a maximum of 3%.

3.3.1.2 Modules - The flat plate array shall consist of 1.32 x 1.32 meter modules using photovoltaic silicon cells. Passive cooling of the solar cells shall be used. The module will be the smallest replaceable field assembly. An 18 module assembly will be the smallest field-installable unit during plant construction. The array will contain the appropriate number of modules to generate the required array output power. The modules shall be designed to allow for simple, efficient and reliable intramodule connections and mounting of the module to the array structure.

3.3.1.2.1 Bypass Diodes - The array (or module) shall feature bypass diodes to enable array operation in the event that one or more cells are shaded or fail. A sufficient number of bypass diodes shall be used so that the shading (or failure) of one cell per array will not result in more than a 3% decrease in power per array. The bypass diode shall be rated at 125% of the maximum operating current and 200% of the maximum bypassed voltage.

3.3.1.2.2 Field Installable Array Unit - A preassembled panel consisting of 18 modules (2 feet wide by 9 feet long) mounted to an steel frame mounting structure and series interconnected with crimp-connectors (at FOB point) shall form the field installable array unit. The field installable unit shall be packed to conform to standard 40-foot trailer shipping specifications. The unit shall be installed facing true South with fixed, lattitude tilt (32.5°N) orientation. The panel frame will be single point grounded by a driven ground rod, one per pedestal.

3.3.1.2.3 Interface - The communication link between the array field and the ICADS central processor (computer) shall be via a serial interface per EIA STD RS-232C.

3.3.1.2.4 Environmental - The modules (array) shall operate over the temperature limits defined in Table 3.1 and in wind conditions of 46 meters/second.

All components shall be adequately sealed (protected) to withstand sand storms and inclement weather.

3.3.2 Power Conditioning

3.3.2.1 Inverter - There shall be a static inverter for each of the 5 megawatt subfields. Each inverter shall be of the self-commutating type, capable of cogenerating with other inverters and the power grid.

3.3.2.1.1 Power Output - Each inverter shall be capable of supplying 5.0 megawatts at 2000 Vac continuous into the HV transformer with a dc input of 2000 $\pm$ 400 Vdc. This is a balanced input centertapped to ground.

3.3.2.1.2 Voltage Input - The voltage input to the inverter with an output load of up to 4.0 megawatt will be within the range of 1600 to 2400 Vdc.

3.3.2.1.3 Power Factor - The inverter will only supply real power to the grid.

3.3.2.1.4 Overload Capacity - The inverter shall be capable of supplying 5.5 megawatts with an input voltage of 2000 $\pm$ 300 Vdc for a period of 60 seconds.

3.3.2.1.5 Output Voltage - The inverter shall be capable of supplying 2000 $\pm$ 10% VRMS, three phase power while cogenerating with the grid. THe grid is standard 60 Hz.

3.3.2.1.6 Efficiency - The efficiency of the inverter shall be 96% or greater at an output load of 1.25 megawatt.

3.3.2.1.7 Peak Power Tracking - The inverter shall have the capability to automatically operate at the dc line voltage which represents the maximum power point of the photovoltaic dc bus.

3.3.2.1.8 I-V Testing - The inverter shall have the capability to automatically operate at the dc line voltage which represents the maximum power point of the photovoltaic dc bus.

3.3.2.1.9 External Power - The external power consumption shall not exceed 5 kW.

3.3.2.1.10 Configuration - The output shall be three phase delta. The input shall be two wire balanced about grounded center tap. Control and instrumentation shall be via a two wire serial interface.

3.3.2.1.11 Physical - The inverter will be installed without any environmental protection and must operate under the environmental conditions defined in Table 3.1.

3.3.2.1.12 Internal Protection - The inverter shall feature input and output current and voltage protection devices that will disable the inverter in the event of failure.

3.3.2.2 Intermediate High Voltage Transformer - The intermediate high voltage transformer may be incorporated into the inverter or may a separate subsystem. There shall be an intermediate high voltage transformer for each of the 20 subfields.

3.3.2.2.1 Power Requirements - The intermediate high voltage transformer shall be rated at a minimum of 5.0 MVA continuous at a unity power factor.

3.3.2.2.2 Configuration - The input shall be 2000 VRMS, three phase delta and the output shall be 34.5 kVRMS, four wire wye.

3.3.2.2.3 Physical - This transformer will be installed without any additional environmental protection and must operate under the conditions defined in Table 3.1.

3.3.2.3 High Voltage Transmission Transformer - There shall be a 34.5/115 kV high voltage transmission transformer to interface PV CPS power with the APS transmission grid.

3.3.2.3.1 Power Requirements - The high voltage transmission transformer shall be rated at a minimum of 75 MVA (OA) continuous at a unity power factor. 125 MVA rating shall exist at 55°C rise with FOA cooling.

3.3.2.3.2 Configuration - The input to the transformers will 34.5 kV RMS, four wire wye and the output shall be 115 kV RMS, three wire delta.

3.3.2.3.3 Physical - The transformers will be installed without any additional environmental protection and must operate under the conditions defined in Table 3.1.

3.3.2.4 Uninterruptable Power System (UPS) - All critical CPS control and monitoring equipment shall operate from a UPS power source. This source shall supply a redundant source of power to the critical equipment.

3.3.2.4.1 Configuration - The UPS shall consist of battery supplied static inverter as the primary source and standard facility power as the back-up source. The design shall feature failure detection circuits and shall automatically switch to the back-up source in the event of a failure. Solid state switching devices must be used in order to keep the switching time to a minimum.

3.3.2.4.2 Input - Power shall be supplied by both standard facilities power and battery power for back-up. The battery shall be sized to supply power to the UPS system for a minimum of eight hours.

3.3.2.4.3 Output Power - The UPS shall be sized to deliver 150% of the power required of the critical control and monitoring circuits.

3.3.3 Instrumentation Control and Display System (ICADS) - The ICADS shall provide the capability of autonomous operation of the CPS. It shall operate unattended provided no failures in the system have been detected. It shall provide PVPS startup and shutdown, array field control, management of the inverters, power and load management, system and subsystem status and generation of the response to system and subsystem alarms.

3.3.3.1 Alarms - Alarms shall be provided to give an indication to the operating personnel that a subsystem or function's operation is abnormal. An alarm can require immediate action to prevent equipment damage or can mean that a maintenance active must be scheduled.

3.3.3.2 Control and Display - There shall be a control and display subsystem to provide to the operation personnel the status of critical system and subsystem functions. It shall also provide a graphical layout of the CPS and depict power and energy generation throughout the system.

3.3.3.3 Power Control - The power distribution circuits shall include the fuses, breakers, remote control switches, manual safety switches and metal switchgear enclosures to implement the control and distribution of ac and dc power.

3.3.3.4 Configuration - The control subsystem shall include as a minimum the following equipment:

a. signal conditioning equipment
b. data acquisition and processing
c. software and implement control
d. operator interactive equipment

In addition, the control subsystem must be functionally integrated with the instrumentation and data recording subsystem.

3.3.4 Instrumentation - The instrumentation data recording shall provide data acquisition, processing and recording of data from the CPS. Automatic data collection shall be provided by an automated data acquisition unit. Signal conditioning devices shall be located throughout the CPS to implement the acquisition of data.

3.3.5 Wiring

The wiring subsystems will provide all interconnections for the CPS equipment both in the array field and within the CPS subsystems, including lightning protection for the system. This shall include the following elements:

a. system lightning protection

b. field wiring junction boxes (dc power, ac power, and signal)

c. array to source interconnections

d. subfield to inverter wiring

e. ac power distribution from the inverters to the distribution transformers

f. interconnect wiring for voice communication

3.3.5.1 Design Requirements - The power losses shall be kept to a maximum of 1% by proper sizing of the power cables and by providing the shortest interconnecting cable runs between the power subsystems.

3.3.5.2 Signal Conductors - Signal conductors shall be shielded to minimize interference. The installation shall provide for the separation or signal, control and data cables from power cables. No cable ties shall enclose both power and other cables in the same bundle.

3.3.5.3 Lightning Protection - The array field and other CPS equipment shall have lightning protection. This lightning protection shall feature the following functional characteristics:

a. provide an equi-potential ground plane through the use of either a counterpoise or suitable driven grounds rods

b. avoid a circuit return path during normal operation

3.3.6 Plant Facilities and Services (PFAS)

The facilities and services system will provide the physical protection and security required by the other subsystems.

3.3.6.1 Site - The site shall consist of a fenced-in area to contain a single-story operations, maintenance and warehouse building and the solar field and separate fenced-in areas to contain the switch gear and transformers. A visitors center building shall also be included.

3.3.6.2 Building - All buildings shall be of masonry and concrete construction. Wiring and construction shall conform to the requirements of the following U.S. codes as applicable:

a. National Electrical Code
b. ANSI Design Loads
c. National Fire Code
d. Uniform Building code
e. Manual of Steel Construction

3.3.6.3 Fence - The array field, buildings of high switch gear and transformers shall be enclosed by a security fence.

3.3.6.4 Road and Parking Area - The CPS will include all-weather roads and walkways within the complex. The roadways and parking area shall consist of a compacted base with chips to minimize dust. The access road from the highway to the sites shall be provided by APS.

3.3.7 Maintenance

Maintenance shall be minimized through the selection of durable materials and finishes (e.g., galvanized or anodized finishes), particularly on exterior items. Special attention shall be paid to protection of all equipment from dust. The use of weather-proofed enclosures for all array field subsystem and other outdoor items is required.

The CPS shall be designed to be compatible with conventional power plant maintenance philosophies. All equipment that typically require high maintenance activity should be easy to service or replace. All like equipment shall be interchangeable.

3.3.7.1 Equipment - The CPS design should minimize the requirement for specialized maintenance equipment. However, the following equipment must be included:

3.3.7.1.1 I-V Trace Equipment - The capability to perform current-voltage load tests on each of the sources must be provided. This capability is required in addition to the I-V capability required in paragraph 3.2.1.8.

The I-V trace equipment must have the capability of taking the I-V data and then generating an I-V characteristic curve normalized to the following ambient conditions:

a. insolation, direct normal - 1000 $W/m^2$
b. ambient temperature - 20°C
c. wind speed - 3 meters/second

3.3.7.1.2 Lens Cleaning Equipment - Equipment to clean the lens must be included. This equipment must be sized so that each array can be cleaned periodically. Water shall be used as the primary cleaning agent. The following equipment must be included:

a. water purifying equipment (if required). The water used for lens cleaning must contain no more than 220 PPM total dissolved solids.

b. storage tank

c. cleaning equipment - This equipment will be mounted on an appropriately sized truck. Its design should minimize the number of personnel required for its operation.

## 3.4 SAFETY

Safety features shall provide for operation in the absence of any attending personnel. Protection shall be included to prevent dangerous or damaging operation resulting from malfunctions. Appropriate caution and warning signs shall be provided.

### 3.4.1 Hazardous Voltage Protection

All hazardous voltages shall be enclosed or otherwise protected in accordance with NEC practices to eliminate hazards to personnel and to minimize the likelihood of equipment damage from inadvertent contact or connection during service. All equipment enclosures and supports shall be securely grounded. Safety devices shall be located to minimize the likelihood of inadvertent activation during maintenance. Low voltage logic and equipment shall be separated from high voltage equipment which shall be identified with readily discernable warning plaques.

### 3.4.2 Facility

The PVPS area shall have signs placed around the perimeter with high voltage warnings.

### 3.4.3 Electrical System/Subsystem Requirements

The CPS shall be designed to meet the following requirements:

a. Electrical/electronic equipment shall have a grounding terminal for connection to a facility ground network.

b. Control shafts, knobs, handles, or levers shall be grounded, insulated or made of non-conductive material to preclude personnel shock or burn.

c. Racks, chassis, or compartments which contain exposed terminals and similar components shall be clearly marked or placarded to indicate the highest operating voltage potential present.

d. Contacts, terminals, and similar devices having voltages above 50 volts (ac and dc) with respect to ground shall be provided with barriers or guards to prevent personnel from accidental contact with such voltages.

e. A means shall be provided to isolate all power from a specific equipment to facilitate maintenance or removal and to ensure personnel safety and to ascertain that the removal of power does not adversely affect the remaining system components; array maintenance shall utilize special procedures and shorting devices to reduce the voltages to safe levels.

f. Circuit breakers shall be located in an accessible area and shall be provided with visual means to indicate their condition (open or closed).

g. Junction boxes shall have locks.

h. UPS power and any emergency power bus shall be in identified conduits separated from all other power, control, or signal wiring and junction boxes.

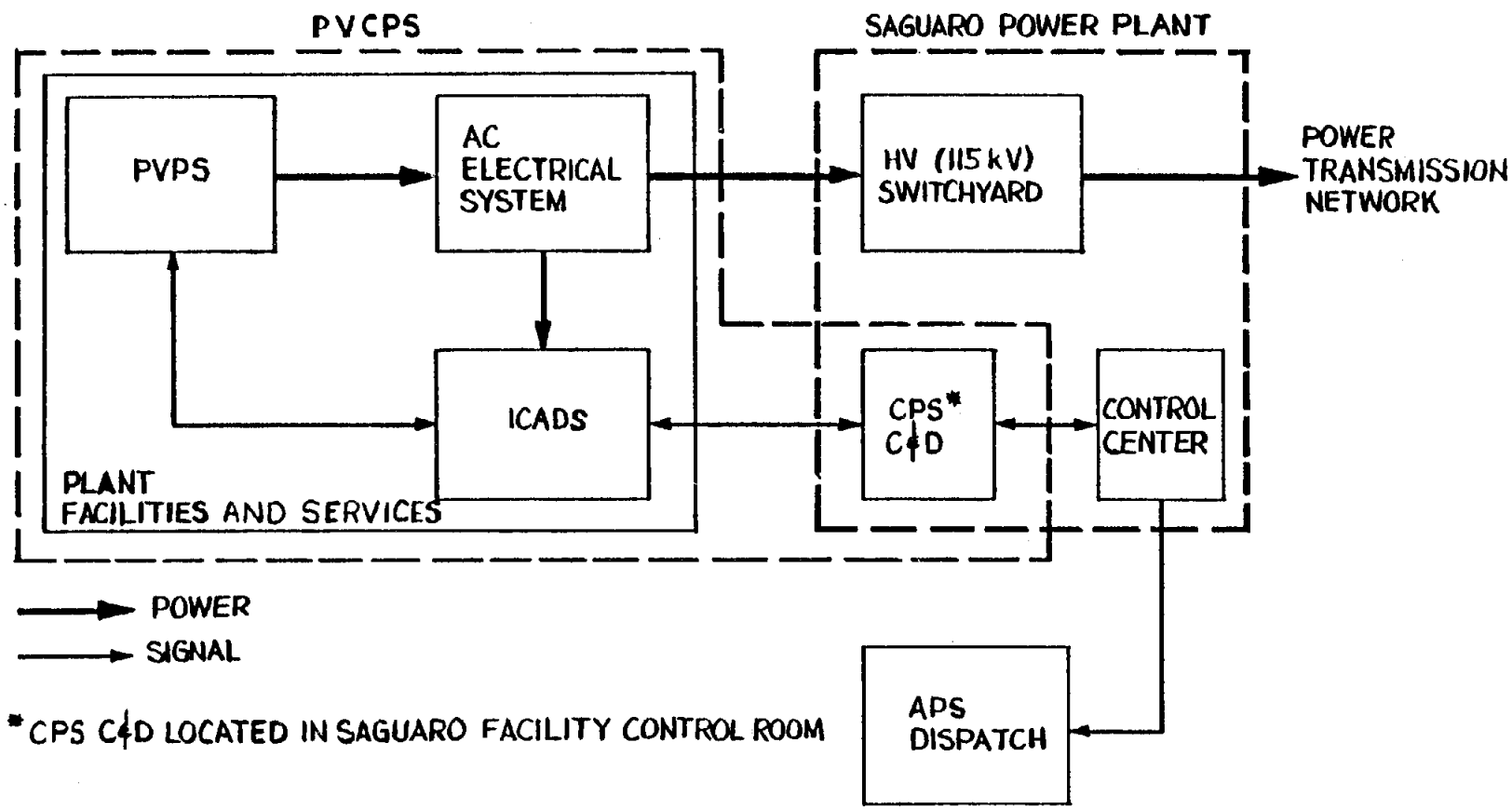


Figure 3.3 System Block Diagram

## APPENDIX C - SYSTEM AND COMPONENT SPECIFICATIONS

In this Appendix the PCU and ICADS specification appear in detail. They are intended to be stand-alone specifications. Also presented are the specifications for major plant components with referenced drawing number for help in correlating configuration, function, construction, and performance.

## 1.0 SCOPE

### 1.1 PURPOSE

This specification establishes the design, performance, and acceptance requirements for a 5.0 MVA static inverter, 2/34.5 kV step-up transformer and controls/switchgear, all of which constitute the power conditioning unit (PCU).

## 2.0 APPLICABLE DOCUMENTS

### 2.1 GENERAL

The following documents of applicable portions thereof shall form part of specification. In the case of conflict between the requirements of this specification and any reference document, this specification shall govern.

#### 2.1.1 Manufacturer

The published engineering specifications describe performance, design, construction features and mechanical characteristics.

#### 2.1.2 Industry

| | |
|---|---|
| NEC | National Electrical Code, 1981 |
| NEMA | National Electrical Manufacturers Association Specification |
| EIA | Standard RS-232 C |

#### 2.1.3 Military

| | |
|---|---|
| MIL-STD-12C | Abbreviations for use on drawings, specifications, standards and technical documents. |
| MIL-STD-451A&B | Standard for electromagnetic interference (EMI) |

## 3.0 INVERTER SPECIFICATIONS

### 3.1 UNIT DEFINITION

The unit is a three phase dc to ac inverter rated at 5.0 MW, ac output continuous. It shall be used in a photovoltaic power system to convert the photovoltaic dc bus to 34.5 KVac, at 60 Hz power line frequency.

### 3.2 PERFORMANCE

#### 3.2.1 General

The inverter shall meet the following requirements:

3.2.1.1 Power Rating - The inverter shall be rated to deliver 5.0 MW ac continuous with an input voltage of 2000 ± 300 Vdc. It shall be capable of producing a reduced power output when supplied with a dc input voltage of 1600-2400 Vdc. See Figure 3.1.

3.2.1.2 Over Load Rating - The inverter shall be capable of supplying 5.5 MW of power for a period of 60 seconds when supplied with an input voltage of 2000 ± 260 Vdc.

3.2.1.3 Output Voltage - The inverter shall be capable of supplying rated power to a three phase, four wire line whose voltage is 34.5 ± 10% KVac. Output phase-to-phase voltage unbalance shall be no greater than 5%.

3.2.1.4 Output Frequency - The inverter shall be capable of supplying rated power to the output bus whose frequency is 60 ± .01 Hz.

3.2.1.5 Power Factor - The inverter is required to supply power to the grid with a power factor between 0.95 leading and 0.96 lagging.

3.2.1.6 Harmonic Distortion - The total harmonic distortion shall not exceed 5% of the fundamental full rated current on any phase.

3.2.1.7 Input Ripple Current Injection - The inverter shall not inject more than 5% ripple current into the photovoltaic dc bus.

3.2.1.8 Efficiency - The efficiency of the inverter shall not be less than 96% at full rated output decreasing linearly to not less than 94% at 1/4 rated load. Efficiency is defined as the ratio of the delivered output power divided by the photovoltaic input power. The efficiency calculation excludes the power consumed by the 480 Vac facility bus and the UPS bus. (Reference paragraphs 3.2.2.4.2 and 3.2.2.4.4.)

3.2.1.9 Synchronization - When issued a start command the inverter shall automatically sequence through its start-up routine and synchronize itself to the output bus (grid). The inverter shall automatically close upon synchronization.

3.2.1.10 Immediate Operation - After being issued a start command the inverter shall be capable of operating of full rated output within 30 seconds.

3.2.2 Configuration

The inverter shall be of the self-commutating type and be capable of cogenerating with the external power grid. It shall feature input and output current protection devices capable of securing the inverter in the event an out-of-limit condition.

3.2.2.1 Start Up and Shut Down - The inverter will automatically start up and shut down when issued start and stop commands. When shut-down (off) the inverter must disconnect both the input and output power lines.

3.2.2.2 Automatic Shut Down - An automatic shut down will occur when the following conditions exist:

a. Input voltage or current exceeds limit,
b. Output voltage or current exceeds limit,
c. Internal components exceed temperature limits,
d. Reverse power is absorbed from the grid,
e. Emergency shut down is initiated from external source.

3.2.2.3 Operating Modes -

3.2.2.3.1 Peak Power Tracking - When issued the peak power tracking command, the inverter will operate at the dc line voltage $\pm$ 2% that represents the maximum power point of the photovoltaic dc bus. If this point exceeds 5.0 MW then the inverter shall limit its output to 5.0 MW.

3.2.2.3.2 Input Current Clamp - In the case that the dc input voltage from the PV array exceeds the nominal 1600-2400 Vdc and available array power is greater than 5% full load, the inverter shall disable the peak power tracking mode and enable the input current clamp mode, operating at reduced efficiency and within 1600-2400 Vdc input range.

3.2.2.3.3 IV Testing - The inverter shall feature a mode that will be used to perform current-voltage loading of the subfield dc bus. When in this mode peak power tracking will be disabled and the inverter will present a variable load to the dc bus. The inverter will load the dc bus from 3600 Adc to open circuit. (The bus voltage will vary from 1400 Vdc to 2900 Vdc at open circuit with the maximum power point load on the dc of 5.8 MW or less.) This test sequence will be controlled by the appropriate electronics within the inverter which will cause the inverter to load the bus starting from 3600 Adc and decreasing to open circuit within 15 seconds. During this time the inverter will measure and store no less than 100 equally spaced I-V data points. This data will then be transmitted via a serial interface to an external data reduction system.

3.2.2.4 Interface Description -

3.2.2.4.1 Input Power - The input to the inverter shall be a positive and negative two line input balanced about ground. The grounding conductor will be a non current carrying conductor. The method of connecting the positive and negative lines will be via compression - type connectors. Provisions must be made to connect 22 individual positive and negative feed lines. The wire size of each feed line will not be less #4/0 AWG copper wire. The inverter shall disconnect from the array bus in case of a dc system ground fault condition.

3.2.2.4.2 ac Output Power - The ac output power shall be four wire wye 34.5 KVac. Each high voltage connection shall accommodate a #1/0 AWG copper cable. A 2000 A power circuit breaker shall be included at the inverter output for load switching and synchronization.

3.2.2.4.3 Facility Power - The facility input shall be three phase wire delta power. Each connection will be via a compression connector capable of accommodating a #12 AWG copper wire.

3.2.2.4.4 Control and Status - There shall be a serial interface for the purpose of providing control and status (data) to and from the system control processor (CPU). This interface shall conform to EIA RS-232C standard and shall be transmitted over a modem capable of operation up to 10,000 feet.

3.2.2.5 Instrumentation and Status - The inverter shall provide the capability of monitoring certain functions and status and transmitting this information by the control and status interface to the Instrumentation Control and Display System (ICADS) central computer.

3.2.2.5.1 dc Bus Voltage - The inverter shall be capable of measuring the dc bus voltage within an accuracy of ± 1% reading and transmitting this information to the ICADS central computer.

3.2.2.5.2 dc Bus Current - The inverter shall be capable of measuring the dc bus current within an accuracy of ± 1% of reading and transmitting this information to the ICADS central computer.

3.2.2.5.3 dc Bus Feeder Currents - The inverter shall provide the means of measuring the 22 individual dc bus feeder currents within an accuracy of ± 5%d or reading and displaying these readings locally at the inverter, and be capable of transmitting these readings over the serial interface.

3.2.2.5.4 Power Output - The inverter shall be capable of measuring the ac power going to the intermediate high voltage transformer within an accuracy of ± 2% and transmitting this information to the ICADS central computer.

3.2.2.6 Reliability - The inverter shall operate as specified herein and shall have a MTBF of no less than 5,000 hours as a design goal.

3.2.2.7 Workmanship - Workmanship for the unit shall be top quality with particular attention given to the following:

a. Freedom from blemishes, burrs, and sharp edges;

b. Required tolerances on dimensions;

c. Compliance to designed radio or fillets;

d. Adequate and correct marking of parts and assemblies;

e. Thoroughness of cleaning, soldering, welding, brazing and finishing;

f. Alignment of parts and assemblies, in accordance with specified requirements;

g. Satisfactory tightness of assemblies, in accordance with specified requirements;

h. Interlocking of components and assemblies.

3.2.2.8 Safety - The inverter shall be so designed that when stored, transported, or operated in accordance with applicable procedures, it will not cause damage to itself or to other equipment or cause injury to personnel. Precautionary markings shall be provided as necessary to warn personnel of hazardous conditions and precautions to be observed to ensure the safety of personnel and equipment.

3.2.2.8.1 Hazardous Voltage - All hazardous voltages shall be enclosed or otherwise protected to eliminate hazards to personnel and to eliminate the possibility of equipment damage from inadvertent contact or connection during service. A hazardous voltage shall be defined as any voltage greater than 50V or a voltage less than 50V where the source exceeds 1 kVA. There shall be precautionary markings.

3.2.2.8.2 Enclosures - All equipment enclosures and support shall be capable of grounding through terminals or lugs. The enclosures shall be designed to minimize entry of fine dust particles.

3.2.2.8.3 Fire Protection - The inverter shall contain the appropriate over-temperature, smoke, etc. devices that shall cause the inverter to shut-down in the event of a fire or abnormal condition.

3.2.2.8.4 Bonding - All internal structures shall be electrically bonded to the equipment enclosures and supports.

3.2.2.9 Cooling - The inverter shall have adequate ambient air cooling to meet the operating environments specified in Table 3.1. Maximum steady state thermal dissipation shall be 200 kW.

3.2.2.10 Physical Characteristics -

3.2.2.10.1 Size and Weight - The inverter shall be packaged into modular racks. Size and weight are not critical except that all racks must be compatible with the size and weight limitations imposed by U.S. commercial carriers (truck).

3.2.2.10.2 Enclosures - The inverter must be housed in metal, weather-tight cabinets capable of operating within the environmental conditions defined in Table 3.1.

3.2.2.10.3 Interrack Connections - All interrack connections shall be supplied and defined by the vendor. These connections shall withstand the environmental conditions defined in Table 3.1.

3.2.2.10.4 Handling Provisions - Enclosure and support structure shall be such that hoisting by hooks on top of structure of lifting by forklift truck can be accomplished.

3.2.2.10.5 Control and Display Panel - These shall be controls, meters and indictors for the following functions:

a. dc bus voltage
b. dc bus current
c. Output voltage
d. Output Power
e. Run time meter
f. Alarm indicators
g. Emergency shut down switch

3.2.2.10.6 Grounding - The PCU grounding system shall be a counterpoise system with driven ground rods and a bare buried copper conductor (see DWG 849PCPS1228). All individual components shall be connected to the ground mat. Grounding inside equipment shall be connected to a common ground bus size per the PCU manufacturers standard practice.

3.2.3 Maintenance

Maintenance shall be minimized through the selection of durable materials and finishes (e.g., galvanized or anodized finished), particularly on exterior items. Special attention shall be paid to protection of all equipment from dust.

The inverter shall be designed to be compatible with conventional power plant maintenance philosophies. All equipment that typically require high maintenance activity should be easy to service or replace. All like equipments shall be interchangeable.

3.2.3.1 Manuals - The inverter manufacture shall supply operation and maintenance manuals pertaining to inverter maintenance. These will contain the following information as a minimum:

a. Specifications
b. Installation Instructions
c. Theory of Operation
d. Trouble-Shooting Information
e. Maintenance Procedure
f. Replacement Parts List
g. Schematic Diagram

3.2.3.2 Spare Parts - The inverter manufacture shall supply a recommended spare parts list.

## 4.0 PREPARATION FOR DELIVERY

### 4.1 GENERAL

Preparation for delivery shall be in accordance with the terms of the procurement agreement and the following.

### 4.2 PACKAGING AND PACKING

Packaging and packing of each item for delivery shall be in accordance with manufacturer's standard practice for domestic shipment.

#### 4.2.1 Special Instructions

If the article requires special attention during receiving, inspection, installation and operation, or if non-obvious characteristics require that special handling be used, a removable instruction tag shall be attached. Attachment, shall be to the shipping container or the the article as appropriate.

## 5.0 INSTRUMENTATION, CONTROL AND DISPLAY SPECIFICATION

### 5.1 PURPOSE

This specification establishes the design, performance, and acceptance requirements for the Instrumentation Control and Display System (ICADS), to be used in a 100 MW photovoltaic plant for a Central Power Station (CPS) design.

### 5.2 GENERAL

The ICADS involves a central computer, computer peripheral equipment, display equipment, operator and field interface and software and data storage. The ICADS will be used by the Arizona Public Service Company (APS). Under Sandia contract guidelines the Saguaro site from APS has been chosen as the model site upon which to base the present design study. Refer to Figure 5.0 for a block diagram for ICADS. For a list of the parameters handled by ICADS refer to Table 5.0.

### 5.3 INTERFACE EXTENT

The ICADS will interface with each of the 20 subfields in the following manner (Figure 5.0).

a. Two array field controllers (AFC) will respond to commands and send wind speed and array status information for a total of 1100 arrays per subfield. The transmission line and interface shall allow array control by ICADS (see Table 5.1).

b. A power conditioning unit (PCU) at each subfield shall send status information and respond to control signals from ICADS (see Table 5.2).

c. An interface between ICADS and Saguaro control room shall provide display and control information to the plant operator.

d. A Data Acquisition Unit (DAU) shall provide analog channels for AC Equipment (ACE) and weather instrumentation. Discrete digital command and pulsed counter channels shall also be available (see Table 5.3).

### 5.4 LOCATION

All of the equipment for ICADS will be located at the field control room. An exception to this rule will be any field interface equipment which will be located at a central location within the PV subfields and a remote display to be located at the Saguaro control room extension.

Table 5.0 Central Computer List of Data

| Parameter | Quantity |
|---|---|
| **Array** | |
| Subfield Power Available | 20 |
| Field Power Available | 1 * |
| Subfield Power Supplied | 20 |
| Field Power Supplied | 1 * |
| Field Daily Energy Available | 1 * |
| Field Annual Energy Available | 1 * |
| Daily Energy Supplied | 1 * |
| Annual Energy Supplied | 1 * |
| Subfield Efficiency | 20 |
| Field Efficiency | 1 * |
| Field Status | 1 * |
| **PCU** | |
| Efficiency | 20 |
| Field Output | 1 |
| **CPS PV Plant** | |
| Efficiency | 1 |
| Daily ac Energy Produced | 1 * |
| Annual ac Energy Produced | 1 * |
| Daily ac Energy Consumed | 1 * |
| Annual ac Energy Consumed | 1 * |

*These values to be calculated by the Central Computer.

Table 5.1 Central Computer/AFC List of Data

| Parameter | Quantity |
|---|---|
| Wind Speed | 20 |
| Array Status & Control | 20 |
| Emergency Stow Command | 20 |

Table 5.2 Central Computer/PCU List of Data

| Parameter | Quantity |
|---|---|
| Subfield Current | 20 |
| Subfield Voltage | 20 |
| PCU Status | 20 |
| PCU Power Out | 20 |
| PCU Status & Control | 20 |

Table 5.3 Central Computer/DAU List of Data

| Parameter | Quantity |
|---|---|
| Insolation (NIP) | 1 |
| Insolation (Standard Cell) | 1 |
| Wind Speed | 1 |
| Wind Direction | 1 |
| Ambient Temperature | 1 |
| *CPS MWatts 115/34.5 kV XFMR | 1 |
| *CPS MVars 115/34.5 kV XFMR | 1 |
| *CPS KW Hrs 115/34.5 kV XFMR | 1 |
| *CPS k Volts 115/34.5 kV XFMR | 1 |
| *CPS k Amps 115/34.5 kV XFMR | 1 |
| 115/34.5 XFMR Winding High Temperature | 1 |
| *k Watts 34.5 kV/480 AUX XFMR'S | 1 |
| *k Hrs 34.5 kV/480 AUX XFMR'S | 2 |
| *k Volts 34.5 kV Bus Voltage | 2 |

| Parameter - Discrete | Quantity |
|---|---|
| Rain Indication | 1 |
| 115-34.5 KV | |
| Low Oil Level | 1 |
| Top Oil High Temperature | 1 |
| Pressure Relief Device Trip | 1 |
| Low Oil Flow | 1 |
| Auxiliary Power Supply Auto Transfer | 1 |
| Transformer (high/low) Pressure | 1 |
| Cylinder Low Gas Pressure | 1 |
| Cooler Stage Test Mode | 1 |
| Combustible Gas Present | 1 |
| Sudden Pressure Relay Operation | 1 |
| Spare | 1 |
| *2000 A Main Breaker ON | 1 |
| *2000 A Main Breaker OFF | 1 |
| *CPS CKT Switcher ON | 1 |
| *CPS CKT Switcher OFF | 1 |
| Ground Fault Condition | 2 |

| Parameter - Pulse Counter | Quantity |
|---|---|
| RTU | |
| Power Increment | 1 |
| Power Decrement | 1 |

*These parameters are the minimum data available at the Saguaro control and display terminal.

## 6.0 ICADS REQUIREMENTS

### 6.1 SYSTEM DEFINITION

The ICADS is made up of a computer system plus all the necessary interfaces to gather, manipulate, calculate, and control data to and from the CPS photovoltaic field (Figure 6.0). The two main subdivisions of ICADS are:

a. Central Computer Equipment (CCE)
b. Computer to PV Field Interface.

### 6.2 CENTRAL COMPUTER EQUIPMENT

The CCE comprises the central computer; computer peripherals for control, storage, and display; a remote display; and a central dispatch interface.

#### 6.2.1 Central Computer

The central computer also referred to as the host computer, shall have the following general characteristics:

a. Memory: 512 kB minimum
b. Memory Word Size: 16 bits minimum
c. Memory Type: MOS, RAM
d. Internal Printing Code: ASCII Standard 96 Character set
e. Addressable Words: 64K (Direct) minimum
f. DMA Ports: 1 minimum
g. I/O Word Length: 16 bits minimum
h. Lines of Communication: 64 minimum
i. I/O Synchronous Lines: 9600 bps
j. I/O Synchronous Lines 2400 bps
k. Single Step: Yes
l. Fault Detection and Isolation: Yes
m. Control Storage: Optional
n. Processors: 1 Floating Point
o. Interface: RS-232C and IEEE-488.

p. I/O Bus - All I/O ports shall interface with the central computer via a common serial bus. The hardware and software configuration shall allow addressing of individual I/O ports or all ports at once by the computer.

q. Peripheral Interface - The central computer shall have the necessary interface to allow communication with the following peripherals as a minimum:

1. Graphic display CRT's (3), via RS-232C Interfaces

2. Disk Storage, 26 MB minimum capacity

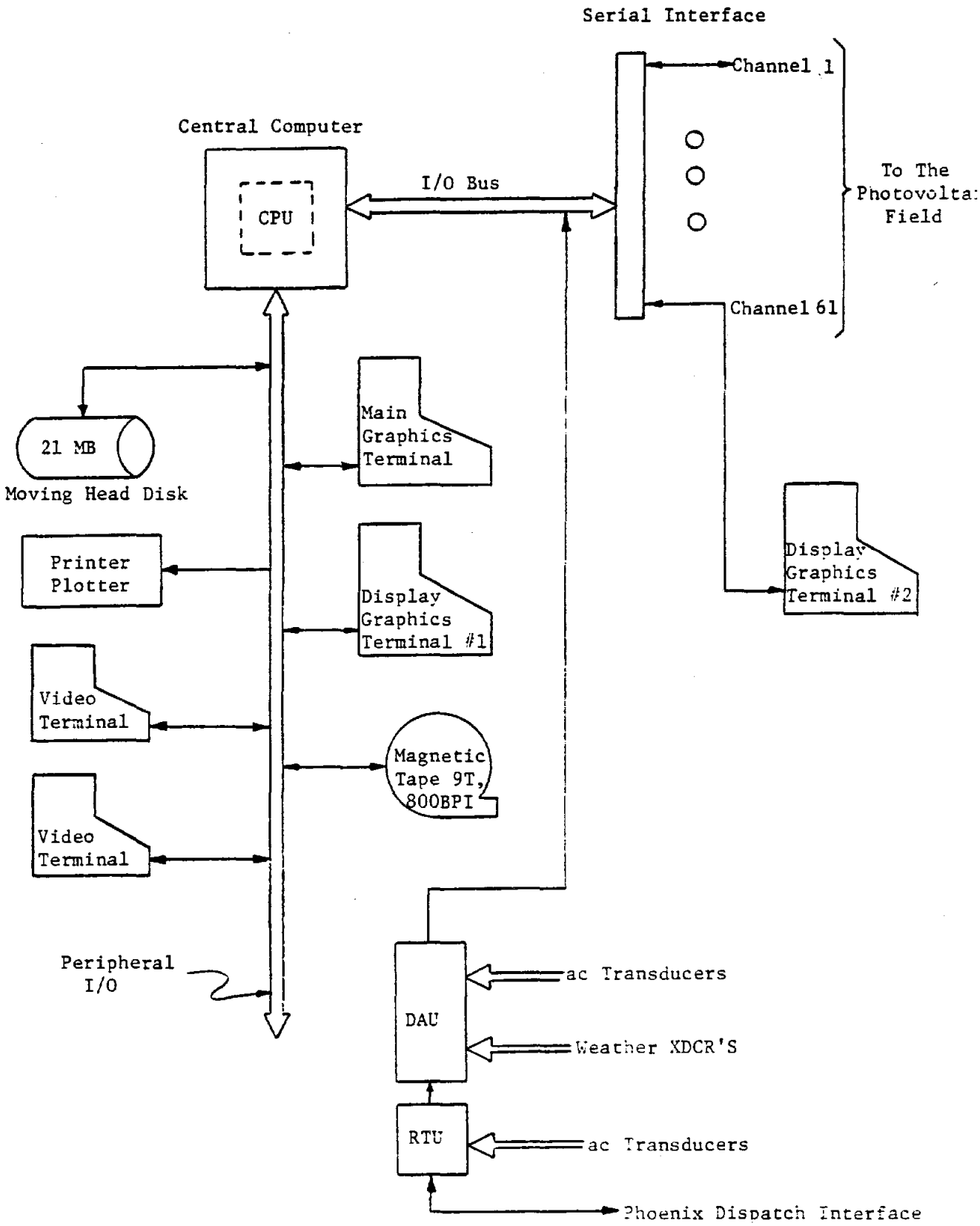


Figure 6.0 ICADS Computer Equipment For CPS

3. Printer/Plotter (1), with IEEE-488 interface or similar

4. Magnetic Tape, 800 bpi, 9-track, 45 ips minimum

5. Spare Interfaces for software development terminals, 3-Full Duplex channels with communication rates to 9600 Baud.

6. Data Acquisition Unit, via IEEE 488 Bus or RS-232C Interfaces.

r. Real-Time - The central computer shall have a 24-hour real-time clock. This clock shall be programmable to output and time on a 24-hour basis. An IEEE-488 bus or similar design shall provide the I/O interface to peripherals and computer.

6.2.2 Computer Peripherals

The peripherals interfacing with the central computer shall be the following:

a. Display and Control Terminals - The general requirements for intelligent graphic terminals are delineated below. These requirements do not apply to terminals used for software development, usually, known as system consoles.

1. Display size of 19"
2. 8 colors minimum
3. 384 x 480 minimum resolution
4. RS-232C serial interface
5. 8 K bytes of RAM refresh-memory as a minimum
6. Keyboard and optional light pen and matrix printer
7. Graphics primitives
8. Off-line storage options
9. Raster display screen
10. Audio output programmable to be used as alarm indicator

b. Printer/Plotter - For printed output of data, diagrams and charts a printer/plotter is required. The performance requirements for the printer/plotter are:

1. Columns: 132 per line
2. Character Spacing: 12.5 per inch
3. Line Spacing: 6.6 per inch
4. Character set: 64 ASCII standard
5. Font: 7 x 9 dot matrix
6. Print Speed: 300 lines per minute minimum
7. Resolution: 100 dots per inch, horizontal and vertical
8. Plot Width: 10.24 inches
9. Plotting Speed: Up to 120 scans per second

c. Moving Head Disk - For storage purposes a large capacity disk storage unit is required. The following specifications must be met:

1. Capacity of 21 MB minimum expandable to 256 MB
2. Data and Service Interrupt Routines
3. Dual Access Interface Option

6.2.3 Magnetic Tape Drive

A tape storage system will exhibit the following required features:

a. Read/Write speed of 45 ips minimum
b. Recording Density of 800 bpi minimum
c. Manual Tape Threading
d. Diagnostics
e. 9 tracks

Note: A disk system with tape back-up cold replace the magnetic tape drive.

6.2.4 Data Acquisition Unit

The central computer shall have a serial (RS-232 or an IEEE-488) Bus Interface with a data acquisition unit (DAU). The DAU shall receive analog information from ac transducers and the weather station. The DAU shall also provide a digital channel for receiving commands from the remote terminal unit (RTU) dispatch interface (Refer to Figure 3.0).

6.3 HOST COMPUTER TO PV FIELD INTERFACE

The minimum required interfaces for remote communications totals 64 (61 channels plus 3-spares). Each channel shall be able to transmit and receive serial data at 1200 baud rates. Implementation of this Interface is done by either of two methods, modems or remote computers. Exhibits A and B, respectively present complete system configurations based on both methods.

6.3.1 Modem Interface

The preferred method for communication between the Host Computer, the PCU's, the AFC's and the remote display shall be implemented through the use of modems (Modulator/Demodulator or data sets. A modem pair hardwired and dedicated shall service each serial I/O channel (Table 6.3). Refer to exhibit A for a configuration based on the modem approach.

6.3.1.1 Modems - Two modems are required per each I/O port dedicated to the central computer/field interface. The general requirements for these units are the following:

a. Data Rate: 300 bps up to 1200 bps, selectable
b. Modulation: Phase Coherent, FSK or Differentially Coherent, PSK
c. Line Conditioning: Not required

Figure 6.1 DAU Interface Block Diagram

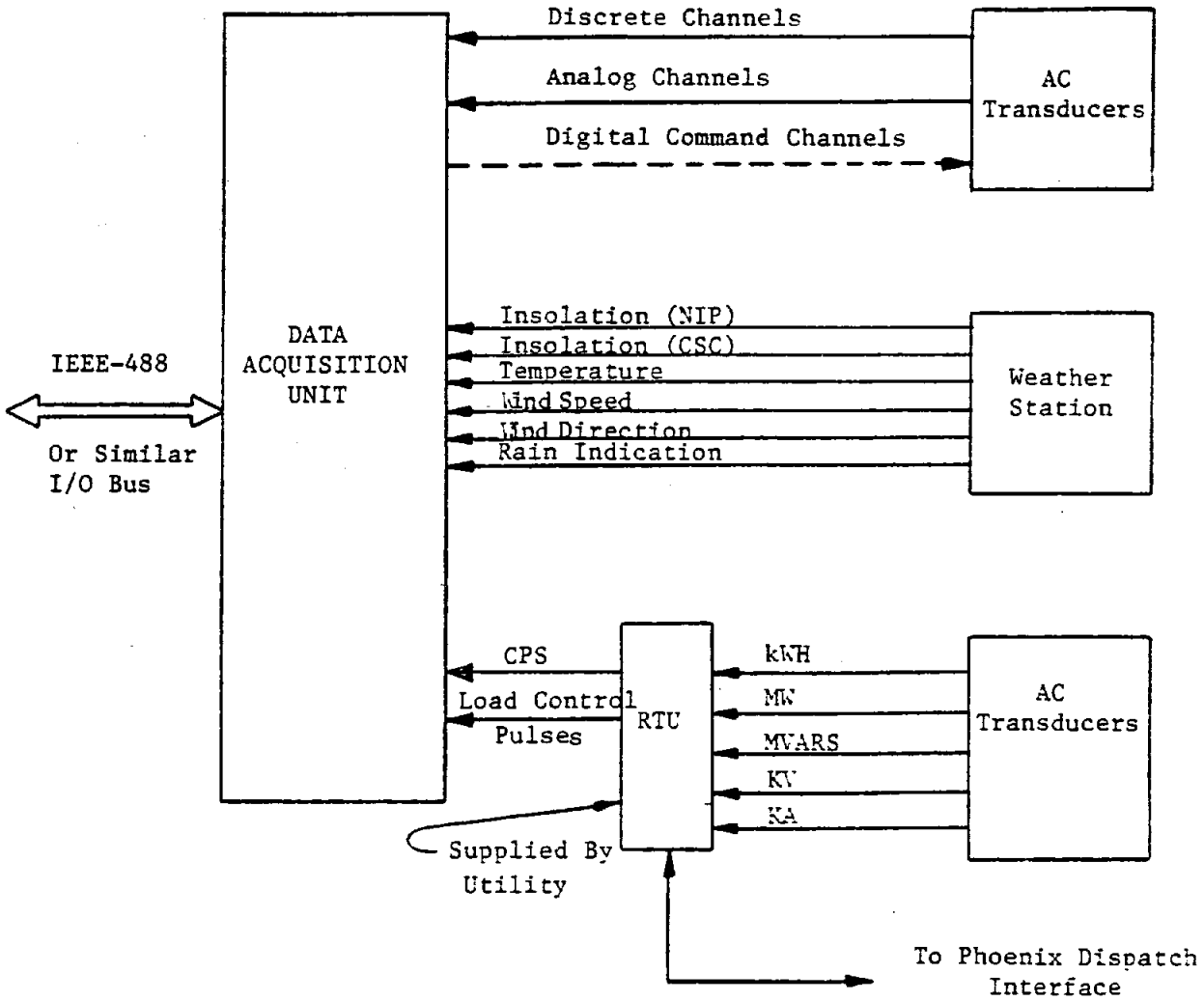

d. Synchronization: Asynchronous or Synchronuous
e. Operating Modes: Full Duplex; 1 twisted pair shielded wire
f. Digital Interface: RS-232C
g. Line Type: 3002 private line
h. Environmental: 0-50°C, 95% non-condensing relative humidity
i. Power Requirement: 115 Vac, 60 Hz
j. Package: Rackmount
k. Compatibility: Bell 103, 113 and 212 modems
l. Lightning Protection: Recommended in zones with medium to high lightning activity

6.3.1.2 Modem Racks - A rack cabinet shall be provided at the ICADS Control Room. The size of its shall be determined by the modem packaging design. Power Outlets shall provide power to 65 modems at 115 Vac, 50 Hz. Grounding points shall allow connections of lugs or cables at the enclosure. In the case of enclosures for modems at the field, similar requirements are necessary, and in addition, these enclosures shall be weather-tight providing protection against the environment.

6.3.2 Remote Computers

Al Alternative method to the modem interface approach shall be the use of remote computers; the number of which are determined by cable lengths. These field computers shall communicate with the AFC's and PCU's at each of the 20 subfields in the CPS PV plant. Location of the computers shall be as close as possible to the subfields they serve. This approach shall drastically cut the wire runs to the host computer while adding speed to the communication lines. Refer to Exhibit B for a configuration based on this method.

6.3.2.1 Characteristics - The following characteristics are required by the remote computers:

a. Interfaces: IEEE 488 and/or RS-232-C
b. I/O Channels: 15 channels minimum
c. Operation: Automatic stand-alone or remote control (Host Computer)
d. Option: Fiber Optics Interface

6.4 SOFTWARE

The software required for the ICADS shall consist of a real-time operating system supplied by the computer vendor with the capability of supporting multiple function interactions. As a minimum the software will consist of the operating system, a man-machine interface module, a communications processing module, and alarms processing module, a graphic display processing module, a data acquisition processing module, a data base initialization module and a data base management module. The software system will consist of an interaction of these modules to perform the ICADS function. The specific module requirements are defined in the subsequent paragraphs.

### 6.4.1 Operating System Module

The operating system that is supplied with the computer equipment must have the capabilities to support a real-time system with multiple inputs and outputs. As a minimum it must have the following qualities:

a. Real time, multiprogramming, memory resident with multiple batch capabilities

b. Event driven priority scheduling

c. Minimum of 250 task priority levels

d. Intertask communication

e. Support multi high level language such as FORTRAN and PASCAL

f. Shareable global memory regions

g. Line printer spooling

h. Support multi computer networks

i. DMA capability for I/O

j. DMA capability for I/O

k. The operating system must have the ability to be generated in a tailored manner to be compatible with different hardware and software configurations.

### 6.4.2 Man-Machine Interface Module

This module is the interface between the operator and the computer for command input from the terminal. The minimum requirements are as follows:

a. Accept operator commands for the control console.

b. Check all commands for valid syntax and generate appropriate error messages.

c. Generate messages responding to each command indicating successful completion of the command.

d. Decode and format data and pass to communications processor module for output.

e. Log commands on the line printer.

f. Generate operator and menus upon request; and

g. Log any status information requested by operator.

### 6.4.3 Communications Processor Module

The purpose of this module is to control the communications between the ICADS, the AFC's and PCU. This module will be structured in such a way as to divide the AFC function from the PCU functions with capabilities to implement either separately or both together. The requirements for this module are:

a. Transmit to the AFC the operational commands generated by the man-machine interface module;

b. Transmit to the PCU the operational commands generated by either the man-machine interface or external interface modules;

c. Receive status and response data from both the AFC's and PCU's;

d. Update the data base with the current information from the AFC's and PCU's

e. Set the appropriate alarm works if communication is lost to any AFC or PCU.

### 6.4.4 Alarms Processor Module

The purpose of this module is to detect error conditions and alert the operator via audible and visual means as to the nature of the error condition (see Table 6.4). The requirements for this module are:

a. Monitor all variables defined to have set limits for any conditions outside those limits and issue the appropriate audible and visual alarms;

b. Monitor specific conditions to see if they occur and issue the appropriate audible and visual alarms; and

c. Initiate any automatic required to respond to a particular alarm event and alert the operator accordingly;

d. Clear alarm words for those conditions that have returned to normal.

e. Log all alarm data on the line printer.

### 6.4.5 Graphics Processor Module

The purpose of this module is to provide the functional interface with the graphics display consoles. This module will allow the creation and real-time update of operator requested displays (Table 6.2). The minimum requirements of this module are:

a. Allow the creation and subsequent saving of operator/engineer defined displays;

b. Provide real-time updates to the currently active displays;

c. Provide the operator with an interactive capability to change displays;

d. Act as the interface between the display system and the rest of the operational system.

### 6.4.6 Data Acquisition Module

This module will provide the interface from ICADS to the Data Acquisition Unit. The minimum requirements are as follows:

a. Receive real-time updates to all data variables being monitored by the data acquisition unit;

b. Transmit control data to the data acquisition unit based on automatic calculations or operator input;

c. Update the real-time data base using the data received from the data acquisition unit.

d. Log any data that is required for hardcopy records.

### 6.4.7 Data Base Management Module

This module will handle requests for data and will also store on disk files, data that are required for historical archiving and subsequent analysis. The module will have both off-line and real-time capabilities. The minimum real-time capabilities are:

a. Retrieve data and perform calculations if necessary to satisfy status requests;

b. Archive on disk files any data designated for historical safe keeping; and

c. Archive on disk files and data designated for subsequent analysis or retrieval.

The off-line capabilities will consist of the following types of applications:

a. Any normal report generation of a periodic basis using the historical or analysis data stored on disk;

b. Any analytical program that manipulate disk stored data for analytical reports; and

c. Any other off-line program that does not require real-time data.

### 6.4.8 Data Base Initialization Module

The purpose of this module is to provide a common data area, accessible by all applications tasks, to be used for inter-task communications. The requirements for this module are:

a. Define the global-common area accessible to all application tasks;

b. Set the global-common variables to predefined values for initial conditions;

c. Build appropriate data base files for alarm messages, alarm conditions, AFC addressing, PCU addressing, etc.

d. Provide any initialization process that is required before current operations begin.

Table 6.2 Required CPS Displays

| Name | Quantity |
|---|---|
| CPS Single-Line Schematics | 1 |
| Weather Status | 1 |
| Alarm Conditions | 1 |
| Peripheral Status | 1 |
| CPS Subfield Power | 1 |
| CPS Annual Power Generation | 1 |
| Subfield Efficiency | 20 |
| CPS Daily Power Generation | 1 |
| Subfield Status AFC's and PCU's | 20 |

Table 6.3 Modem Pair Assignment

| Remote Device | Subfield Location | Modem Interface # |
|---|---|---|
| AFC 1 | 1 thru 20 | 1, 4, 7, 10, 13, 16, 19, 22, 25, 28, 31, 3, 4, 37, 49, 43, 46, 49, 52, 55 and 58. |
| AFC 2 | 1 thru 20 | 2, 5, 8, 11, 14, 17, 20, 23, 26, 29, 32, 3, 5, 38, 41, 44, 47, 50, 53, 56 and 59. |
| PCU | 1 thru 20 | 3, 6, 9, 12, 15, 18, 21, 24, 27, 30, 33, 3, 6, 39, 42, 45, 48, 51, 54, 57, and 60. |
| ISC 80011 Display | Saguaro New Control Room | 61 |

Table 6.4 Alarms List

| Function | Total Quantity |
|---|---|
| **PCU** | |
| Input Overvoltage | 20 |
| Input Overcurrent | 20 |
| Output Overvoltage | 20 |
| Output Overcurrent | 20 |
| High Temperature | 20 |
| Emergency Shutdown Command | 20 |
| I/O Not Responding | 20 |
| **AFC** | |
| Windy Condition | 20 |
| Emergency Stow Initiated | 20 |
| Source Array Not Responding | 20 |
| I/O Not Responding | 20 |
| **ICADS** | |
| Peripheral Failure | 7 |
| I/O Failure | 1 |
| **Weather Station** | |
| Low Insolation | 1 |
| High Temperature | 1 |
| I/O Not Responding | 1 |
| Rain | |
| **ac Switchyard** | |
| Over Voltage | 1 |
| Over Current | 1 |
| Under Voltage | 1 |
| Under Current | 1 |
| No Phase Synchronization | 1 |
| Reverse Power Absorbed | 1 |
| I/O Not Responding | 1 |
| **Main Transformer 115 kV/34.5 kV** | |
| Low Oil Level | 1 |
| Top Oil High Temperature | 1 |
| Winding Hottest Spot High Temperature | 1 |
| Pressure Relief Device Trip | 1 |
| Low Oil Flow | 1 |
| Auxiliary Power Supply Auto Transfer | 1 |
| Transformer (high/low) Pressure | 1 |
| Cylinder Low Gas Pressure | 1 |
| Cooler Stage Test Mode | 1 |
| Combustible Gas Present | 1 |
| Sudden Pressure Relay Operation | 1 |
| Spare | 1 |
| Ground Fault Condition | 2 |

## 6.6 GENERAL TECHNICAL AND PHYSICAL CHARACTERISTICS

### 6.6.1 Alarms

The ICADS shall be able to accept and indicate visually and audibly alarm conditions as listed on Table 6.4.

### 6.6.2 Power Requirements

The total power requirement for ICADS is 25 kVA which shall be supported by UPS. The load distribution per location is as follows (see Figure 6.0):

a. Field Control Building - 21 kVA
b. Saguaro Control Room - 2 kVA
c. Field Modems Power - 2 kVA, Exhibit A
d. Field Computer Power - 6 kVA, Exhibit B, lower (a) to 19 kVA

### 6.6.3 Environmental Requirements

ICADS environmental requirements apply to all equipment used indoors and ICADS field related equipment outdoors (modems).

a. Indoors Equipment

| | |
|---|---|
| Operating Temperature of | 28°C ± 5°C |
| Relative Humidity of | 50% ± 20% non-condensing |

b. Outdoor Equipment

| | |
|---|---|
| Operating Temperature of | 28°C ± 20°C |
| Relative Humidity of | 50% ± 40% non-condensing |

### 6.6.4 Maintenance

Maintenance shall be minimized through the selection of durable components, materials and finishes. All of the ICADS equipment shall be compatible with conventional, power plant maintenance routines. Equipment with high maintenance activity shall be easy to service or replace.

6.6.4.1 Manuals - The ICADS Manufacturers shall supply operation and maintenance manuals on individual equipment. The following minimum information shall be contained as a minimum:

a. Specifications - electrical, mechanical and environmental
b. Installation Instructions
c. Theory of Operation
d. Service Information
e. Maintenance Procedure
f. Replaceable Parts List
g. Schematic Diagrams
h. Operators Manual

## 7.0 ICADS QUALITY VERIFICATIONS REQUIREMENTS

### 7.1 GENERAL

This section describes the requirements for the Quality Assurance of ICADS.

#### 7.1.1 Quality Assurance Plan

The prime contractor shall prepare and implement a Quality Assurance Plan (QA Plan) to establish the requirements and controls to be implemented during procurement, assembly, installation, checkout, and acceptance of ICADS hardware and software.

#### 7.1.2 Verifications of Requirements

The reasoning for verification of ICADS' requirements shall be based upon Section 3.9 of this present specification. A detailed verification program shall be defined in the QA Plan.

#### 7.1.3 Test

Tests, as determined by the contractor, shall be used to verify compliance with requirements when verification by other methods is impractical. These analyses shall be those required by the contract or planned by the contractor for use in the normal design activities.

#### 7.1.4 Design Review

Where this method of verification is specified in Table 7.1, the design, as depicted by the drawings shall be reviewed to determine if the requirement has been incorporated. The system configurations presented at the Critical Design Review (CDR) as approved or as modified during the CDR, or in response thereto, establish a design baseline and shall constitute the means for verification of compliance.

#### 7.1.5 Inspection

Inspections shall be accomplished to determine that the article meets the drawing specifications to which it is was manufactured or installed. Inspections will be conducted to determine compliance to those drawing criteria determined by the contractor to be critical to the performance or function of the article. Inspection may also be satisfied by review or certification by the manufacturer that the article meets applicable drawings and/or specifications.

Table 7.1 Design and Performance Verification Matrix

Verification Method Codes:

T = Test
A = Analysis
I = Inspection
D = Design Review

| Paragraph | T | A | I | D |
|---|---|---|---|---|
| 6.2.1 | | X | X | |
| 6.2.2 | | X | X | |
| 6.2.3 | | X | X | |
| 6.2.4 | | X | X | |
| 6.3 | | X | X | |
| 6.3.1 | | X | X | |
| 6.3.1.1 | | | X | |
| 6.3.1.2 | | | X | |
| 6.3.2 | | | X | |
| 6.3.2.1 | | | X | |
| 6.4 | X | X | X | |
| 6.4.1 | X | X | | |
| 6.4.2 | X | X | | |
| 6.4.3 | X | X | | |
| 6.4.4 | X | X | | |
| 6.4.5 | X | X | | |
| 6.4.6 | X | X | | |
| 6.4.7 | X | X | | |
| 6.4.8 | X | X | | |
| 6.5 | | | X | |
| 6.6.1 | | X | X | |
| 6.6.2 | | | X | |
| 6.6.3 | | | X | |
| 6.6.4 | | | X | |
| 6.6.4.1 | | | X | |

## 8.0 PREPARATION FOR DELIVERY

### 8.1 GENERAL

Preparation for delivery shall be in accordance with the acceptance plan.

### 8.2 PACKAGING AND PACKING

Packaging and packing of each item for delivery shall be in accordance with standard practices for national commercial shipment.

#### 8.2.1 Special Instructions

If the article requires special attention during receiving, inspection, installation and operation, or if non-obvious characteristics require that special handling be used, instructions shall be stenciled to the shipping container or the article as appropriate.

## 9.0 NOTES

### 9.1 DEFINITIONS

The following definitions apply on this document

| | |
|---|---|
| ARRAY | A mechanically integrated photovoltaic unit design that produces dc electricity from the sun. |
| BAUD | The number of signal elements per second. |
| SOURCE | A group of arrays interconnected in such a manner as to produce a known voltage and current output, under specified conditions. |
| BYTE | Eight contingous bits. |
| CONTROL | A device that permits automatic or manual control of another device or system. |
| DISPATCH | The process of distributing utility loads among committed generating units. |
| INSOLATION | The incident solar energy flux in power per unit area. |
| INSTRUMENTATION | Devices that allow measurement of engineering values. |
| INVERTER | A unit that converts dc electricity to ac electricity. |
| PHOTOVOLTAIC | Related to the direct conversion of solar energy into electrical energy. |
| POWER CONDITIONING UNIT | This unit consist of an inverter plus ac power conditioning transformers and related instrumentation. |
| STOW | Array in lens down position parallel to the ground. |
| SUBFIELD | A group of branch circuits interconnected in such a manner as to produce a known power value under specified conditions. |

## 9.2 ABBREVIATIONS

| | |
|---|---|
| AFC | Array Field Controller |
| ANSI | American National Standards Institute |
| B | Byte |
| bps | bits per second |
| CPS | Central Power Station |
| CRT | Cathode Ray Tube |
| DAU | Data Acquisition Unit |
| DMA | Direct Memory Access |
| EIA | Electronic Industries Association |
| IEEE | Institute of Electrical and Electronic Engineers |
| I/O | Input/Output (Interface) |
| ips | inches per second |
| ISC | Intelligent Systems Corporation |
| KB | Kilo-Bytes (1,000) |
| lpm | line per minute |
| MB | Mega-Bytes (1,000,000) |
| Modem | Modulator Demodulator |
| PCU | Power Conditioning Unit |
| PV | Photovoltaic |
| RAM | Random-Access Memory |
| RS | Recommended Standard |
| RTU | Remote Terminal Unit |
| TS | Transector Systems |
| UDS | Universal Data System Corporation |
| UPS | Uninterruptable Power System |

NOTE: PAGES C-31 THRU C-33 INTENTIONALLY OMITTED

PHOTOVOLTAIC POWER STATION

COMPONENT SPECIFICATION

Subsystem: PVPS Drawing Number: 849PCPS1130

Component: Array Field Controller (AFC)

Component Function: The AFC's primary function will be to provide solar ephemeral data to all arrays in a subfield for synthetic coarse sun acquisition. In addition, the AFC will allow manual control of all arrays or an individual array in a given subfield. There will be two AFC's per subfield totaling 40 AFC's for the CPS 100 MWe layout.

Component Description:

The AFC is based on the I8085 microprocessor. It will contain 8K x 8 Eprom, 256 bytes of RAM, an arithmetic processing unit (APU), I/O ports and an operator interface and 80-character display. System timing is based on a 2MHz crystal giving a system clock of MHz. The real-time clock will use an interrupt count scheme as a time-base. These interrupts will be generated from a divided-down 10MHz crystal.

Miscellaneous Requirements:

Design Life: 30 years
Design Operating Temperature: -40°C to +85°C
Component Operating Voltage: 5VDC
Parts will be high industrial grade screened to Mil Spec 883 level B standards.

Interfaces:

The AFC will interface to 550 STU's connected in series to provide a regenerative data transmission scheme. This electrical interface will conform to RS-422 specifications. ICADS interface is provided by a RS-232 electrical format. On additional input is provided for a wind speed alarm set point.

PHOTOVOLTAIC POWER STATION

COMPONENT SPECIFICATION

Subsystem: PVPS Drawing Number: 849PCPS1131

Component: AFC Enclosure

Component Function: Provides environmental protection to the array field controller (AFC) and associated instrumentation.

Component Description:

Hoffman Free standing NEMA Type-4 enclosure made from 12 gauge steel. There are no holes or knockouts. A hasp and staple is provided for padlocking.

Dimensions: 1.8m x .8m x .61 m
Includes: Panels, relay rack angle, clamping nuts and floor mounts.

Miscellaneous Requirements:

The enclosure is to be mounted on the concrete support block with the floor mounts. Two fans will also be enclosed for air circulation.

Interfaces:

PCU foundation

AFC (see preceeding specification)

PHOTOVOLTAIC POWER STATION

COMPONENT SPECIFICATION

Subsystem: acES Drawing Number: 849PCPS2001

Component: Grounding Transformer

Component Function: 34.5 kV Ground Transformer

Component Description:

34.5 kV, 100 kV BIL, 2500 kVA outdoor oil filled grounding transformer 4.5 % impedance on a 2500 kVA Wye/Delta Base. An equivalent Zig Zag transformer would be acceptable. Either arrangement would be one minute rated on a 10% continuous neutral current basis. To be complete with a 600/5A, C200 Neutral current transformer and sudden pressure relay. The 34.5 kV termination shall be suitable for bottom entry 34.5 kV cable.

Miscellaneous Requirements:

Operating Environment:

Maximum Average Daily Temperature 28°C

Temperature Range - 19°C to +49°C

Relative Humidity 0-100%

Altitude 589m

PHOTOVOLTAIC POWER STATION

COMPONENT SPECIFICATION

Subsystem: acES Drawing Number:

Component: Main Transformer

Component Function: PV Generation Step-up to 115 kV

Component Description:

15 kV/34.5, 60 Hz, 30-phase, 2 Winding Outdoor, Oil Filled.
HV - Delta, 450 kV B.I.L. LV-Wye 200 kV B.I.L. Neutral - 150 kV B.I.L.

MVA 55°C Rise - 75.0A, 100 FA, 125 FA/FOA

MVA 65°C Rise - 84.0A, 112 FA, 140 FA/FOA

Impedance 8.5% on 75 MVA Base

Lightning Arrestors - 120 kV Tranquell or Equivalent

115 kV Bushings to have 2 MR 600/5, C400, RF 1.5 C.T.'s per phase.

Complete with annunciator have the following alarm points:

a. Low oil level (and high oil level where applicable)
b. Top oil high temperature
c. Winding hottest spot high temperature
d. Pressure relief device trip
e. Low oil flow (where applicable)
f. Auxiliary power supply auto transfer
g. Transformer high/low pressure (where applicable)
h. Cylinder low gas pressure (where applicable)
i. Coller stage test mode
j. Combustible gas present
k. Sudden pressure relay operation
l. Spare

Operating Environment:

Maximum Average Daily Temperature 28°C

Temperature range - 19°C to +49°C

Relative Humidity 0-100%

Altitude 589m

PHOTOVOLTAIC POWER STATION

COMPONENT SPECIFICATION

Subsystem: Drawing Number: 849PCPS1228

Component: dc Cabling (Power)

Component Function: Two thousand volt interface power wiring between field devices and the 5 MWe inverter.

Materials to be furnished:

The 2,000 volt shielded, metal-clad power cable to be furnished shall be as follows:

| Description | Quantity, Feet Concentrator | Minimum Reel Length, Feet |
|---|---|---|
| 3/C #8 | 2,342,560 | 1,500 |
| 3/C # 4/0 | 316,360 | 1,500 |

I. OPERATING CONDITIONS

A. Environmental

The materials furnished shall be suitable for installation and shall provide satisfactory operation under the following environmental conditions:

1. Elevation above mean seal level: 589m
2. Ambient temperature range: -40°C to 40°C
3. Rodent population

B. Service Conditions

1. The cable shall be cable of operating continuously without exceeding rated temperatures at rated current, and without deteriorization of insulating, protecting and jacketing materials under the conditions specified.

2. The cable will be direct buried in earth.

II. DESIGN AND CONSTRUCTION

A. General

1. The cable to be furnished hereunder shall have a design life of thirty (30) years. The cable shall consist of the manufacturer's standard design and first line quality which meets or exceeds the requirements of this Specification.

2. All cables shall be suitable for circuits operating in wet or dry locations and shall have a continuous temperature rating of 90°C. All power cables shall have an emergency overload temperature rating of 130°C for periods not to exceed 100 hours per year and a short-circuit temperature rating of 250°C.

3. Codes and Standards - All cable specified herein shall be manufactured and tested in accordance with the latest applicable requirements of the following Codes and Standards:

   a. Construction

      1) The cable conductors shall be copper, Class B concentric or compact stranded in accordance with ASTM B8. The individual strands shall be soft or annealed copper wire with tensile and electrical properties in accordance with ICEA A-68-516, Part 2.

      2) The cable shall be a three conductor shielded metal-clad cable.

   b. Conductor Shielding - The conductor shall have an extruded Permashield energy suppression material with an average thickness of .4mm and a minimum thickness of .3mm. The energy suppression layer shall be free-stripping from the conductor.

   c. Insulation - The conductors shall be insulated with a heat, moisture, and corona resisting ethylene propylene (EPR) type elastomer compound. The average wall thickness of conductor insulation shall be 9mm. The minimum thickness of insulation at any point shall be not less than 90 percent of the specified average thickness. Conductor insulation shall meet or exceed the electrical and physical requirement of Table I herein, ICEA SD-68-516 and Paragraph A.3 of AEIC No. 6-75.

   d. Insulation Shielding - The conductors shall have a shielding material over the insulation. The shielding material shall consist of an extruded Permashield energy suppression layer with an average thickness of 1.0mm and a minimum thickness of .9mm.

   e. Armor Sheath and Jacket

      1) The cable shall have an overall, close-fitting, impervious, continuous, galvanized armor, with a minimum thickness of .3mm. The individual conductors shall be cabled together with non-hygroscopic fillers and binder,tape overall. A flame-resistant PVC jacket shall be applied overall. The jacket thickness shall be 3.2mm.

      2) Cables shall be rodent resistant and shall be suitable for direct burial in accordance with NEC requirements.

f. Identification - The cable conductors shall be identified with a serial market tape. The tape shall be placed over the extruded Permashield material. As a minimum, the information on the market tape shall include repeated at one foot intervals. The cable outer jacket shall be durably marked with the manufacturer's name, generic name of insulation, size of conductor, conductor material, rated voltage, year of manufacture and sequential footage. This identification shall be repeated at regular intervals not exceeding 61 cm. Conductor phase identification shall be provided by color coding of individual conductors black, red and blue. Color coding shall be by permanently indelible colors, and shall be nonfading and color stable.

Interfaces:

Concentrator array assembly (DWG 849PCPS3000)

dc Field Junction Box'

PCU (see Appendix C, PCU Spec, Section 3.2.2.4.1)

PHOTOVOLTAIC POWER STATION

COMPONENT SPECIFICATION

Subsystem: acES Drawing Number: 849PCPS2001-1

Component: Main Transformer

Component Function: PV Generation Step-up to 115 kV

Component Description:

15 kV/34.5, 60 Hz, 30-phase, 2 Winding Outdoor, Oil Filled.
HV - Delta, 450 kV B.I.L.; LV-Wye 200 kV B.I.L.; Neutral - 150 kV B.I.L.

MVA 55°C Rise - 75.0A, 100 FA, 125 FA/FOA

MVA 65°C Rise - 84.0A, 112 FA, 140 FA/FOA

Impedance 8.5% on 75 MVA Base

Lightning Arrestors - 120 kV Tranquell or Equivalent

115 kV Bushings to have 2 MR 600/5, C400, RF 1.5 C.T.'s per phase.

Complete with annunciator having the following alarm points:

a. Low oil level (and high oil level where applicable)
b. Top oil high temperature
c. Winding hottest spot high temperature
d. Pressure relief device trip
e. Low oil flow (where applicable)
f. Auxiliary power supply auto transfer
g. Transformer high/low pressure (where applicable)
h. Cylinder low gas pressure (where applicable)
i. Coller stage test mode
j. Combustible gas present
k. Sudden pressure relay operation

Operating Environment:

Maximum Average Daily Temperature 28°C

Temperature Range - 19°C to +49°C

Relative Humidity 0-100%

Altitude 489m

PHOTOVOLTAIC POWER STATION

COMPONENT SPECIFICATION

Subsystem: acES Drawing Number: 849PCPS2001-1

Component: Grounding Transformer

Component Function: 34.5 kV System Grounding Transformer

Component Description:

34.5 kV, 200 kV BIL, 2500 kVA Outdoor oil filled Grounding Transformer 7.5% impedance on a 2500 kVA Wye/Delta Base. An equivalent Zig Zag Transformer would be acceptable. Either arrangement would be one minute rated on a 10% continuous neutral current basis. To be complete with a 600/5A, C200 Neutral current transformer and sudden pressure relay. The 34.5 kV terminations shall be suitable for bottom entry 34.5 kV cable.

Miscellaneous Requirements:

Operating Environment:

Maximum Average Daily Temperature 28°C

Temperature Range - -19°C to +49°C

Relative Humidity 0-100%

Altitude 589m

PHOTOVOLTAIC POWER STATION

COMPONENT SPECIFICATION

Subsystem: acES/ICADS Drawing Number: 849PCPS2026-1

Component: Instrumentation, and Low Voltage Power Cable

Component Function: The 600 volt instrumentation power and control cabling will be to make connections between control equipment.

I. OPERATING CONDITIONS

A. Environmental

The materials furnished shall be suitable for installation and shall provide satisfactory operation under the following environmental conditions:

1. Elevation above mean sea level: 589m
2. Ambient temperature range: -40°C to 40°C
3. Rodent population

B. Service Conditions

1. The cable shall be capable of operating continuously without exceeding rated temperatures at rated current, and without deteriorization of insulating, protecting and jacketing materials under the conditions specified.

2. The cable will be direct buried in earth, installed in PVC conduit encased in concrete, or installed in PVC conduit direct buried in earth.

II. DESIGN AND CONSTRUCTION

A. General

1. The cable to be furnished hereunder shall have a design life of thirty (30) years. The cable shall consist of the manufacturer's standard design and first line quality which meets or exceeds the requirements of this Specification.

2. All cables shall be suitable for circuits operating in wet or dry locations and shall have a continuous temperature rating of 90°C. All power cables shall have an emergency overload temperature rating of 130°C for periods not to exceed 100 hours per year and a short-circuit temperature rating of 250°C.

3. Codes and Standards - All cable specified herein shall be manufactured and tested in accordance with the latest applicable requirements of the following Codes and Standards:

a. AEIC - Association of Edison Illuminating Companies
b. ASTM - American Society for Testing and Materials
c. IEEE - Institute of Electrical and Electronic Engineers
d. ICEA - Insulated Cable Engineers Association, Inc.
e. NEC - National Electrical Code
f. NEMA - National Electrical Manufacturers Association
g. UL - Underwriters' Laboratories, Inc.

B. Construction

1. Construction of the 600-volt metal-clad cables shall be as follows:

a. Conductors - The conductors shall be stranded soft annealed copper wire. The tensile and electrical properties shall be in accordance with ASTM B33. The stranding shall be Class B in accordance with ASTM B8. The conductor resistance shall be in accordance with ICEA S-19-81, paragraph 2.6.

b. Insulation - The conductors shall be insulated with a flame, heat, moisture and corona resisting ethylene propylene (EPR) type elastomer compound. The insulation shall be free-stripping, shall conform to the applicable requirements of ICEA S-68-516 and shall have electrical and physical characteristics in accordance with Table II. The average insulation thickness shall not be less than specified in Table IV. The minimum thickness at any on point shall not be less than 90 percent of the specified average thickness.

c. Assembly

1) The cable shall be constructed from stranded copper conductors Type MC individually insulated with ethylene propylene rubber (EPR). Each conductor shall have a jacket with a thickness of 50 mils. The jacket shall be high quality, heat, flame and radiation resistant compound. The jacket shall be resistant to contaminants and solutions normally contained in duct installation. The jacket shall be either heavy duty black neoprene in accordance with Table II herein and with Paragraph 4.4.3 of ICEA S-68-515, or heavy duty chlorosulfonated polythylene (Hypalon) in accordance with Table III and with Paragraph 4.4.9 of ICEA S-68-516. The three conductor cable shall include a No. 4 AWG stranded bare tinned copper ground wire. The four conductor cable shall include a stranded bare tinned copper ground wire equal in size to the four phase conductors. The cable shall be assembled in accordance with Part 5 of ICEA S-19-81 using using non-hygroscopic, flame resistant filler and binder tapes. The cable shall have an overall, close fitting impervious, continuous, bronze tape sheath. Sheath thickness shall be 2.5 cm. A flame resistant PVC jacket shall be applied over the bronze sheath. The jacket thickness shall be 20 cm.

2) Cables shall be rodent resistant and shall be suitable for direct earth burial in accordance with NEC requirements.

d. Identification - Cable identification markings shall show manufacturer, number and size or conductors, voltage rating, temperature rating, cable insulation type and year of manufacture. Conductor phase identification shall be provided by color coding of individual conductors. Three conductor cable shall be color coded red, blue and black, white, red and blue. Color coding shall be by permanent indelible colors, and shall be nonfading and color stable.

C. The 600-volt armored instrumentation cable (90°C) to be furnished shall be as follows:

| Description | Total Quantity, Feet | Minimum Reel Length, Feet |
|---|---|---|
| 3/C No. 12 AWG, shielded | 3,000 | 500 |
| One (1) Twisted, Shielded Pair No. 16 AWG | 2,000 | 500 |
| 4/C No. 10 AWG, shielded | 2,000 | 500 |
| 2/C No. 12 AWG, shielded | 5,000 | 500 |
| 2/C No. 10 AWG, shielded | 2,000 | 500 |
| One (1) Twisted, Shielded Pair No. 20 AWG | 1,452,000 | 1000 |

D. The 600-volt instrumentation cable (90°C) to be furnished shall be as follows:

| | | |
|---|---|---|
| 3/C No. 12 AWG, shielded | 1,000 | 500 |
| 4/C No. 10 AWG, shielded | 1,000 | 500 |
| 2/C No. 12 AWG, shielded | 2,000 | 500 |
| 2/C No. 10 AWG, shielded | 1,000 | 500 |

E. Instrumentation Cable

1. 600-Volt Instrumentation Cable - The 600-volt instrumentation cable shall be stranded, tin-coated copper conductors with ethylene propylene rubber insulation, with twisted pairs or triads, and with overall shield and Hypalon jacket. Maximum capacitance between conductors of the No. 16 AWG cable shall be 100 pf.

2. 600-Volt Armored Instrumentation Cable

a. The 600-volt armored instrumentation cable shall be stranded, tin-coated copper conductor with ethylene propylene rubber insulation, with twisted pairs or triads, and with overall shield and Hypalon jacket. The cable shall have and overall, close fitting, impervious, continuous, corrugated aluminum sheath. Sheath thickness shall be a nominal .2m (minimum). A flame resistant PVC jacket shall be applied over the aluminum sheath. Maximum capacitance between conductors of the No. 16 AWG cables shall be 100 pf.

b. The cable shall be rodent resistant and shall be suitable for direct earth burial in accordance with NEC requirements.

3. Ethylene Propylene Rubber Insulated Cable - Type II

a. Material - The conductors shall be insulated with a flame, heat moisture and corona resisting ethylene propylene Type II elastomer compound. The insulation shall be free-stripping, shall conform to the applicable requirements of ICEA S-68-516.

b. Thickness - The average insulation thickness shall not be less than 25 mils. The minimum thickness at any one point shall not be less than 90 percent of the specified average thickness.

c. Conductor Jacket - (For individual conductors or multiconductor cable)

4. Conductor Identification

a. The conductors of concentric lay ups shall be identified in accordance with Method 1 of Parts 5 of ICEA S-19-81.

b. The conductors of single twisted pair cables shall have one (1) white and one (1) black conductor. The conductors of multipair twisted and multiconductor cables shall be identified in accordance with the color sequence given in Table 5-2 of ICEA S-19-81.

c. The conductors of single twisted triads shall have one (1) white, one (1) red, and one (1) black conductor.

5. Pair and Triad Assembly

a. Length of Lay - The individual conductors of each instrumentation cable pair and of each instrumentation cable triad shall be twisted together with a length of lay in accordance with Table II hereinafter.

b. Shielding - Each cable shall be overall shielded with an aluminized-mylar tape not less than 2 mils thick applied with an overlap of not less than 25 percent and a stranded tin-coated copper drain wire sized in accordance with Table II. The drain wire shall be in continuous contact with the aluminum side of the shielding tape.

1) Cable Assembly

(a) The required number of single, pairs or triads shall be assembled in accordance with ICEA S-19-81, Part 5, using nonhygroscopic, flame-resistant fillers.

(b) The overall shield shall be in accordance with Paragraph E.e. (2) above.

(c) The assembly shall then be covered with helically applied flame-retardant fillers and binder tapes. These tapes shall be located directly under the cable jacket.

2) Overall Cable Jacket

(a) Each cable assembly shall have an overall jacket. Unless otherwise specified, the overall jacket shall be black.

(b) The jacket shall be a flame-resistant Hypalon compound in accordance with Paragraph 4.13.8a of ICEA S-19-81.

(c) The average thickness of the cable jacket shall not be less than the thickness specified in Table I hereinafter.

3) Cable Identification

(a) Each cable shall be identified by a printed marking in a contrasting indelible color applied to the outer surface of the cable jacket at intervals of not less than 35.6 cm.

(b) The printed marking shall include the following information:

(1) Manufacturer
(2) Number of size and conductors
(3) Shield (if applicable)
(4) Conductor material
(5) Voltage rating
(6) Temperature rating
(7) Insulation/jacket material
(8) Year of manufacture
(9) Sequential footage

TABLE I

JACKET THICKNESS

| Conductor or Cable Diameter, * Inches | Overall Cable Jacket, Inches |
|---|---|
| 0 to 0.250 | 0.045 |
| 0.251 to 0.425 | 0.045 |
| 0.426 to 0.700 | 0.060 |
| 0.701 to 1.500 | 0.080 |
| 1.501 to 2.500 | 0.110 |
| 2.501 and larger | 0.140 |

* Including binder tapes and shield, if applicable.

TABLE II

NOMINAL LENGTH OF LAY AND DRAIN WIRE SIZES

| Length of Lay, Inches | | | | Drain Wire Sizes | |
|---|---|---|---|---|---|
| | Instrumentation | | | | |
| Conductor Size, AWG | Pairs | Triads | Thermocouple Cable Pairs | Component Shield Drain AWG | Overall Shield Drain AWG |
| 20 | 2.0 | 2.0 | 2.5 | 20 | 18 |
| 18 | 2.0 | 2.25 | 2.75 | 20 | 18 |
| 16 | 2.0 | 2.5 | 3.0 | 18 | 16 |

PHOTOVOLTAIC POWER STATION

COMPONENT SPECIFICATION

Subsystem: acES Drawing Number: 849PCPS1128

Component: ac Cabling (Power 34.5 kV)

Component Function: High voltage (34.5 kV) interface wiring between inverter 5 MVA transformer and main high voltage bus switchgear.

Materials to be furnished:

The 35,000 volt shielded, metal-clad power cable to be furnished shall be as follows:

| Description | Quantity, Feet Concentrator | Minimum Reel Length, Feet |
|---|---|---|
| 3/C No 1/0 AWG | 2,500,000 | 1,000 |

I. OPERATING CONDITIONS

A. Environmental

The materials furnished shall be suitable for installation and shall provide satisfactory operation under the following environmental conditions:

1. Elevation above mean sea level: 589 m
2. Ambient temperature range: -40°C to 40°C
3. Rodent population

B. Service Conditions

1. The cable shall be capable of operating continuously without exceeding rated temperatures at rated current, and without deterioration of insulating, protecting and jacketing materials under the conditions specified.

2. The cable will be direct buried in earth, installed in PVC conduit encased in concrete, or installed in PVC conduit direct buried in earth.

II. DESIGN AND CONSTRUCTION

A. General

1. The cable to be furnished hereunder shall have a design life of thirty (30) years. The cable shall consist of the manufacturers standard design and first line quality which meets or exceeds the requirements of this Specification.

2. All cables shall be suitable for circuits operating in wet or dry locations and shall have a continuous temperature rating of 90°C. All power cables shall have an emergency overload temperature rating of 130°C for periods not to exceed 100 hours per year and a short-circuit temperature rating of 250°C.

3. Codes and Standards - All cable specified herein shall be manufactured and tested in accordance with the latest applicable requirements of the following Codes and Standards:

   a. a. AEIC - Association of Edison Illuminating Companies
   b. ASTM - American Society for Testing and Materials
   c. IEEE - Institute of Electrical and Electronic Engineers
   d. ICEA - Insulated Cable Engineers Association, Inc.
   e. NEC - National Electrical Code
   f. NEMA - National Electrical Manufacturers Association
   g. UL - Underwriters' Laboratories, Inc.

B. Construction

1. Construction of the 35,000 volt metal-clad power cables shall be as follows:

   a. Conductors

      1) The cable conductors shall be copper, Class B concentric or compact stranded in accordance with ASTM B8. The individual strands shall be soft and annealed copper wire with tensile and electrical properties in accordance with ICEA S-68-516, Part 2.

      2) The cable shall be three conductor shielded metal-clad cable.

   b. Conductor Shielding - The conductor shall have an extruded Permashield energy suppression material with an average thickness of .38m mils and a minimum thickness of .3mm. The energy suppression layer shall be free-stripping from the conductor.

   c. Insulation - The conductors shall be insulated with a heat, moisture, and corona resisting ethylene propylene (EPR) type elastomer compound. The average wall thickness of conductor insulation shall be 9mm. The minimum thickness of insulation at any point shall not be less than 90 percent of the specified average thickness. Conductor insulation shall meet or exceed the electrical and physical requirements of Table I herein, ICEA S-68-516 and Paragraph A.3 of AEIC No. 6-75.

   d. Insulation Shielding - The conductors shall have a shielding material over the insulation. The shielding material shall consist of an extruded Permashield energy suppression layer with an average thickness of 1mm and a minimum thickness of 0.9mm.

e. Armor Sheath and Jacket

1) The cable shall have an overall, close-fitting, impervious, continuous, galvanized armor. A frame-resistant PVC jacket shall be applied over the armor. The jacket thickness shall be 2.4mm.

2) Cables shall be rodent resistant and shall be suitable for direct burial in accordance with NEC requirements.

f. Identification - The cable outer jacket shall be durably marked with the manufacturer's name, generic name and insulation, size of conductor, conductor material, rated voltage, year of manufacture and sequential footage. The identification shall be repeated at regular intervals not exceeding 6 cm.

Interfaces:

Inverter 5 MVA transformer (see DWG 849PCPS1128/2001-1)
34.5 KV Switchgear (see DWG 849PCPS2026/2001-1)

PHOTOVOLTAIC POWER STATION

COMPONENT SPECIFICATION

Subsystem: PFAS Drawing Number: 849PCPS4032

Component: Maintenance/Warehouse Building

Component Function: Provide housing for maintenance activities and O&M equipment. Also to provide for warehousing of spare parts.

Component Description:

The building is a prefabricated rigid frame (clear span) metal structure. It is 27.4m x 44.7m with a 3m x 3m office, rest room and 3.7m x 6.1m water treatment area. It will be insulated and ventilated. The office will be air conditioned. (2) 3.7m x 4.3m rollup and (2) man doors are provided.

Miscellaneous Requirements:

Frame design shall accommodate light-duty chain hoist support.

Interfaces:

Utilities - water, sewer and electricity

Water treatment system.

PHOTOVOLTAIC POWER STATION

COMPONENT SPECIFICATION

Subsystem: PFAS Drawing Number: 849PCPS1226

Component: Fencing

Component Function: Provide plant security and prevent intrusion of large wildlife, tumbleweeds, etc.

Component Description:

The 2.4m high perimeter chain link fence shall be of standard construction. A lockable sliding gate shall be provided at the main entrance

Miscellaneous Requirements:

Additional fencing shall be provided around electrical equipment as required.

Interfaces:

Access road

Site grading

PHOTOVOLTAIC POWER STATION

COMPONENT SPECIFICATION

Subsystem: PFAS Drawing Number: 849PCPS4034

Component: Visitors Center (Optional)

Component Function: Provide building to house display and audiovisual presentations and allow public viewing of the PV field.

Component Description:

Building is concrete block construction with a ground floor slab on grade and spread footings. A 156 $m^2$ $ft^2$ display area, 96m $ft^2$ office area, rest rooms and HVAC room are provided. In addition, a roof walkway allows public viewing of the PV field located north of the building.

Miscellaneous Requirements:

Landscaping and walkways

Paved parking area sufficient for 25-35 vehicles.

Interfaces:

Access road to plant

Utilities - water, sewer, electricity.

PHOTOVOLTAIC POWER STATION

COMPONENT SPECIFICATION

Subsystem: PFAS Drawing Number: 849PCPS4031

Component: PV Field Control Building

Component Function: Central control building at PV field to house central display, control, and data acquisition equipment.

Component Description:

Concrete block building with environmentally controlled rooms for control and computer equipment. Size approximately 15.8m x 9.8m.

Miscellaneous Requirements:

Building wall also contain an electronics shop, battery room, HVAC room, kitchen and rest rooms.

Interfaces:

Utilities - Water, electricity, sewer

Control equipment

PHOTOVOLTAIC POWER STATION

COMPONENT SPECIFICATION

Subsystem: PFAS Drawing Number: 849PCPS4031

Component: Main Station Control Room Addition (For Saguaro Site Only)

Component Function: House PV control and data acquisition equipment adjacent to existing Saguaro Main Station control room equipment.

Component Description:

Steel frame and concrete block addition extending east from the existing Saguaro control building.

Miscellaneous Requirements:

Supplement existing HVAC as required.

Interfaces:

Existing Structure
Control Equipment

FORM 62-114
REV. 4-75

# Stearns-Roger



JOB NO. 23393 DATE 3-17-82 BY JVG CH'K.

CUSTOMER PROJECT P.V. CENTRAL POWER STATION

SUBJECT SEPTIC TANK & SEEPAGE FIELD DESIGN DATA

BASIS 35 GAL/DAY/MAN
5 MIN PERK TEST (ASSUMED)

SEPTIC TANK A SERVES BOTH WAREHOUSE & EQPT. CONTROL BLDG

| | | | | |
|---|---|---|---|---|
| WAREHOUSE | 10 MEN/DAY | (1 SHIFT) | | |
| EQPT. CONTROL | 1 | " | " | " |
| TOTAL | 11 | " | " | " |

11 X 35 = 385 GPD USE 400 ~~FT²~~ GPD

400 ÷ 2.2 GPD/FT² *1 = 183 FT² (SEEPAGE FIELD)
USE 220 FT²

SEPTIC TANK B SERVES THE VISITOR CTR - 14 MEN/DAY (1 SHIFT)

14 X 35 = 490 GPD USE 500 GPD

500 ÷ 2.2 GPD/FT² *1 = 228 FT² USE 220 FT²

(SEPTIC TANK IS SIZED FOR 1.5 X GPD MINIMUM)

*1 BASED ON ALLOWABLE RATE OF SEWAGE APPLICATION TO A SOIL

FORM 62-114
REV. 4-75

**Stearns-Roger**

PAGE 2 OF 3

JOB NO. 25393 DATE 3-17-82 BY JVG CH'K.

CUSTOMER PROJECT P.V. CENTRAL POWER STATION

SUBJECT SEPTIC TANK & SEEPAGE FIELD SKETCHES (BOTH SYSTEMS IDENTICAL)

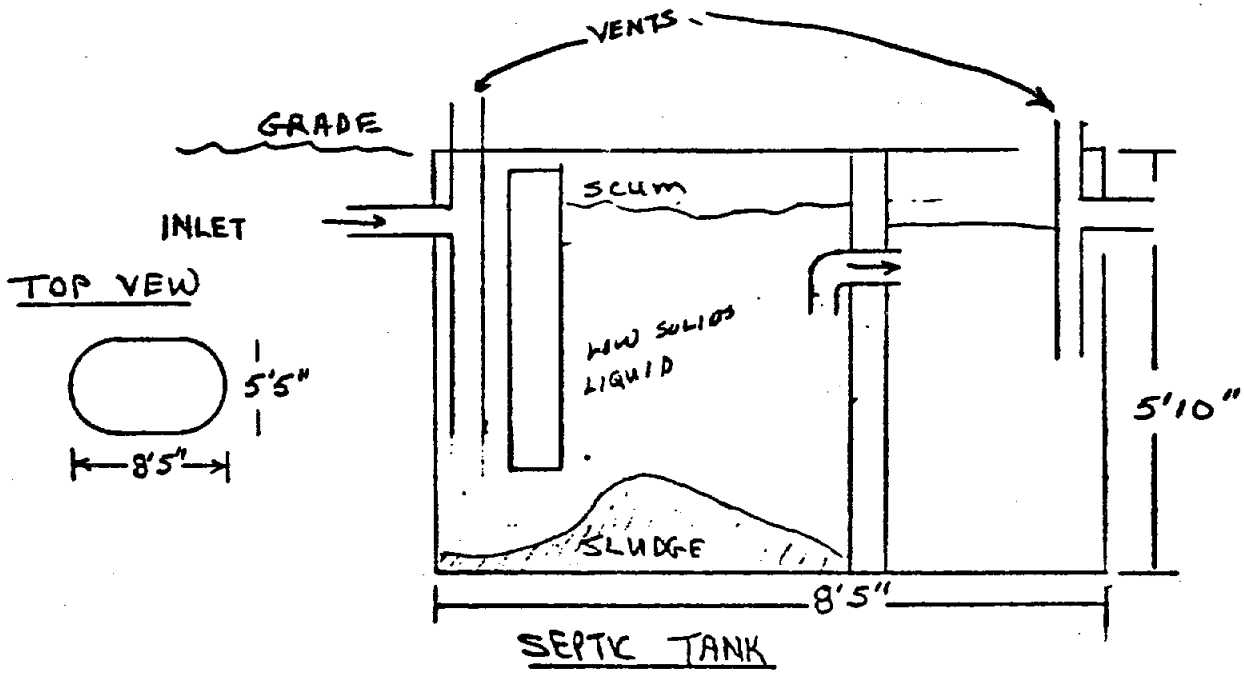


SEPTIC TANK

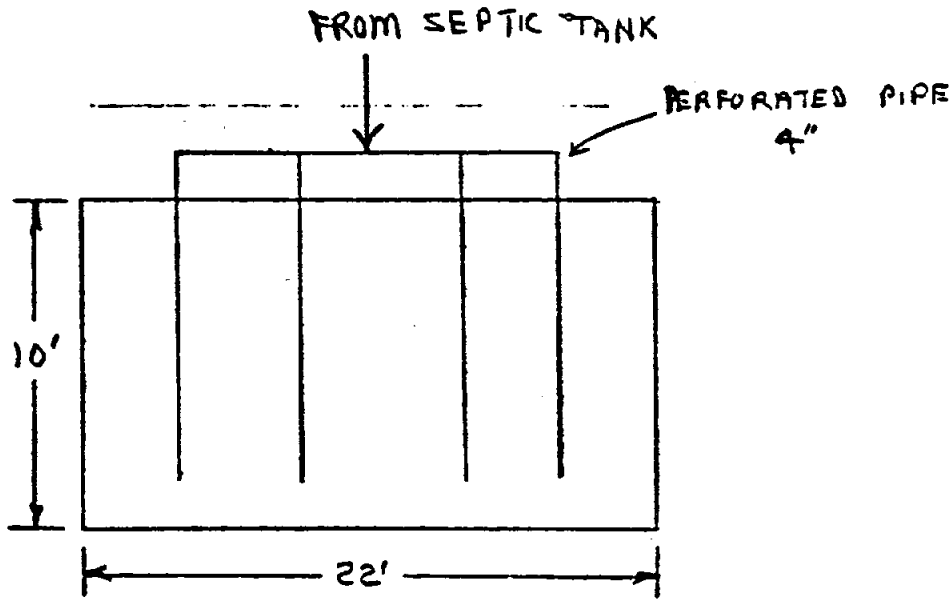


SEEPAGE FIELD

FORM 62-114
REV. 4-75

# Stearns-Roger

PAGE 3 OF 3

JOB NO. 25393 DATE 3-17-82 BY JVG CH'K.

CUSTOMER PROJECT

SUBJECT SEPTIC TANK & SEEPAGE FIELD COST ESTIMATE

SEPTIC TANK A&B SYSTEMS

SEPTIC TANK $400 PRE-FAB CONCRETE

INSTALLATION $400

SEEPAGE FIELD $3/FT² $600

PIPE & INSTALLATION $100

TOTAL $1500 (EACH SYSTEM)

FORM 52-114
REV. 4 75

# Stearns-Roger

PAGE 1 OF 5

JOB NO. C25393 DATE 3-23-82 BY AWM CH'K.

CUSTOMER MARTIN MARIETTA PROJECT 100 MWe PV CENTRAL POWER STA.

SUBJECT ARRAY WASH WATER SUPPLY SYSTEM

PURPOSE: TO SIZE WASH WATER SYSTEM FOR PROPOSED 100 MWe PHOTOVOLTAIC CENTRAL POWER STATION AT THE SAGUARO POWER PLANT, APS. TWO (2) PV SYSTEM DESIGNS ARE INCLUDED:

1. CONCENTRATOR CPS DESIGN
2. FLAT PLATE CPS DESIGN

REFERENCES:

1. MMC LETTER DTD. JAN. 20, 1982 RE: WASHING REQUIREMENTS
2. APS COMPANY CORRESPONDENCE DTD. MARCH 10, 1982 RE: PLANT WATER ANALYSES (SEE BELOW)
3. S-R DWG. 12K01-21 SITE PLAN, FLAT PLATE P.V.
4. S-R DWG. 12K01-31 SITE PLAN, CONCENTRATOR P.V.

## DEEPWELLS

All water for plant usage originates from three deepwells. Pumping depths from the No. 1, No. 2 and No. 3 wells are 590 ft., 590 ft. and 620 ft. respectively.

The combined output for the three wells for 1981 was 600,708,000 gallons. The primary usage was for makeup to the circulating water system, which in conjunction with two cooling towers provides cooling for the steam condensers, and boiler water makeup provided by a double chain demineralizer.

### Typical Well Analyses

| | No. 1 | No. 2 | No. 3 |
|---|---|---|---|
| Alkalinity as $CaCO_3$ | 126 mg/L | 128 mg/L | 120 mg/L |
| Aluminum | nil | nil | nil |
| Arsenic | nil | nil | nil |
| Bicarbonate | 154 | 156 | 146 |
| Boron | nil | nil | nil |
| Cadmium | nil | nil | nil |
| Calcium | 33 | 27 | 28 |
| Carbonate | 0 | 0 | 0 |
| Chloride | 14 | 14 | 14 |
| Chromium VI | nil | nil | nil |
| C.O.D. | nil | nil | nil |
| Copper | nil | nil | nil |
| Cyanide | nil | nil | nil |
| Fluoride | 0.5 | 0.4 | 0.4 |
| Iron, total | 0.06 | nil | nil |
| Lead | nil | nil | nil |
| Magnesium | 3.5 | 3.2 | 3.5 |
| Manganese | nil | nil | nil |
| Mercury | nil | nil | nil |
| Nickel | nil | nil | nil |
| Nitrate, as N. | 0.9 | 1.1 | 1.3 |
| Phenols | nil | nil | nil |
| Potasium | 2.3 mg/L | 2.3 mg/L | 2.1 mg/L |
| Selenium | nil | nil | nil |
| Silver | nil | nil | nil |
| Sodium | 38 | 41 | 41 |
| Sulfate | 30 | 34 | 38 |
| T.D.S. @ 180°C. | 190 | 220 | 220 |
| Total Hardness | [illegible] | [illegible] | [illegible] |

FORM 62-114
REV. 4-75

# Stearns-Roger



JOB NO. C25393 DATE 3-23-82 BY AWM CH'K.

CUSTOMER MARTIN MARIETTA PROJECT 100 MWe PV CENTRAL POWER STA.

SUBJECT ARRAY WASH WATER SUPPLY SYSTEM

SITE: SAGUARO POWER PLANT, ARIZONA PUBLIC SERVICE CO.

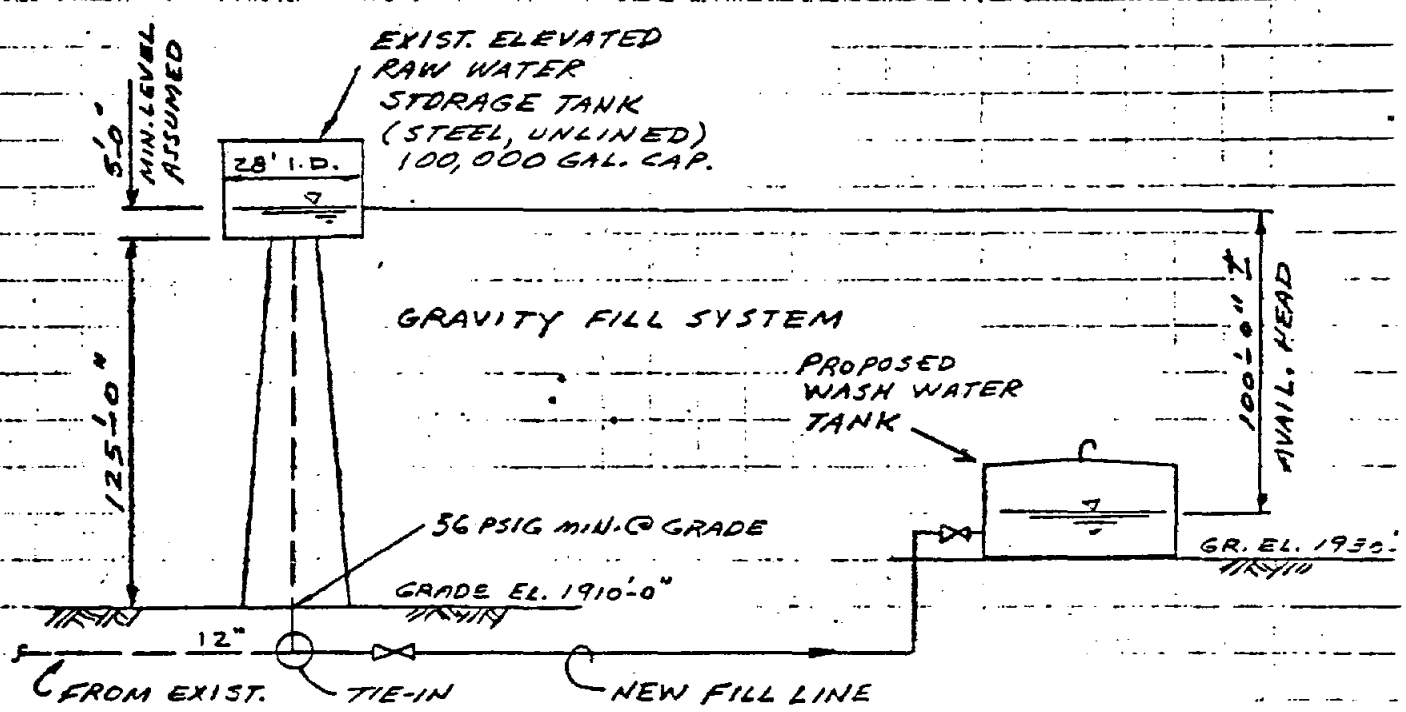


3" - 8500 L.F. (CONCENTRATOR SYSTEM)
4" - 7500 L.F. (FLAT PLATE SYSTEM)

WASH WATER REQUIREMENTS (REF: MMC LETTER JAN. 20, 1982)

CONCENTRATOR SYSTEM — 15,000 GAL/DAY (8 HRS)
(31.25 GPM AVG. USAGE)

FLAT PLATE SYSTEM — 30,000 GAL/DAY (8 HRS)
(62.5 GPM AVG. USAGE)

FILL LINE SIZING (GRAVITY FLOW)

REF: CAMERON (C=100)

$$q^{1.85} = \frac{(f)(d)^{4.8655}}{0.2083}$$

| | | CONC. SYSTEM | FLAT PLATE SYSTEM |
|---|---|---|---|
| FRICTION, 'f', ft/100 ft | | 1.17 (100'/8500') | 1.33 (100'/7500') |
| PIPE SIZE | d | q | q |
| 2" STD. WT. | (2.067" I.D.) | 17 GPM | 18 GPM |
| 2½ " | (2.469" I.D.) | 27 | 29 |
| 3 " | (3.068" I.D.) | 48 | 52 |
| 4 " | (4.026" I.D.) | 99 | 106 |
| 6 " | (6.065" I.D.) | 290 | [illegible] |

FORM 62-114
REV. 4-75

# Stearns-Roger

PAGE 3 OF 5

JOB NO. C25393 DATE 3-23-82 BY AWM CH'K.

CUSTOMER MARTIN MARIETTA PROJECT 100 MWe PV CENTRAL POWER STA.

SUBJECT ARRAY WASH WATER SUPPLY SYSTEM

## WASH WATER TANK

SIZE TANK FOR 2½ DAYS STORAGE

STANDARD: ANSI/AWWA D100-79 AWWA STANDARD FOR WELDED STEEL TANKS FOR WATER STORAGE

SEISMIC ZONE: 2 (UBC)

## CONCENTRATOR WASH WATER TANK

REQ'D CAPACITY 2.5 × 15,000 GPD = 37,500 GAL.

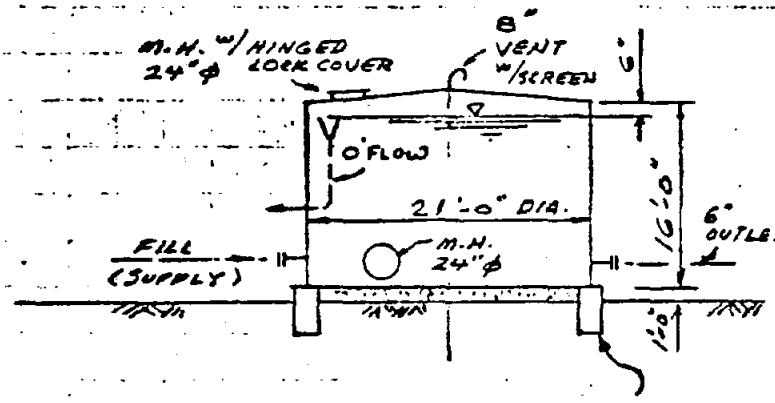


ACCESSORIES:

- 1-24" DIA. ROOF M.H.
- 1-24" DIA. SHELL M.H.
- 2-LADDER (INSIDE & OUT
- 1-LEVEL INDICATOR
- 1-VENT 8"
- 1-OVERFLOW 6"
- 1-INLET CONN. 3"
- 1-OUTLET CONN. 6"

MATERIAL — ASTM A283 GR. B OR C C.S. OR EQUIV.

| | THICKNESS | Ft² | UNIT WT. | WT., LB | LINING: N/A |
|---|---|---|---|---|---|
| SHELL | 1/4" | 1056 | 10.30 | 10,900 | |
| ROOF | 1/4" | ~367 | 10.30 | 3,800 | |
| FLOOR | 3/8" | 346 | 15.45 | 5,350 | |
| | | | | 20,050 | |
| | | | +10% | 2 000 | |
| | | | | 22,050 LB. | TANK |
| WT. OF WATER | | | | + 312,800 LB | WATER |

| | | | |
|---|---|---|---|
| FILL LINE SIZE (INLET) | 2½" | 3" | 4" |
| FILL RATE (APPROX.), GPM | 27 | 48 | 79 |
| FILL TIME (APPROX.), HR (w/o WITHDRAWAL) | 23 | 13 | 6.3 |

FORM 62 114
REV. 4-75

**Stearns-Roger**



JOB NO. C25393 DATE 3-23-82 BY AWM CH'K.

CUSTOMER MARTIN MARIETTA PROJECT 100 MWe PV CENTRAL POWER STA.

SUBJECT ARRAY WASH WATER SUPPLY SYSTEM

## FLAT PLATE WASH WATER TANK

REQ'D. CAPACITY 2.5 x 30,000 GPD = 75,000 GAL.

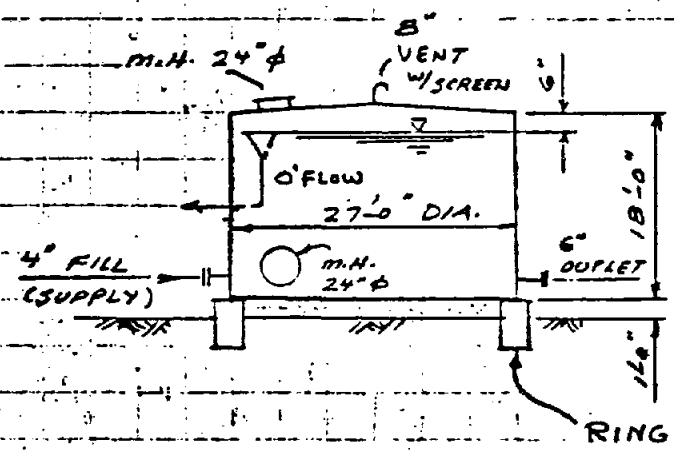


ACCESSORIES:
- 1-24" DIA. ROOF M.H.
- 1-24" DIA. SHELL M.H.
- 2-LADDER (INSIDE & OU
- 1-LEVEL INDICATOR
- 1-VENT 8"
- 1-OVERFLOW 6"
- 1-INLET CONN. 4"
- 1-OUTLET CONN. 6"

MATERIAL - ASTM A283 GR. B OR C C.S. OR EQUIV.

LINING - NONE

| PL THICKNESS | | FT² | UNIT WT. | WT., LB. |
|---|---|---|---|---|
| SHELL | 1/4" | ~~227~~ 15 | 10.30 | ~~53,800~~ 15,730 |
| ROOF | 1/4" | 610 | 10.30 | 6,300 |
| FLOOR | 3/8" | 573 | 15.45 | 8,850 |
| | | | | ~~68,950~~ 30,830 |
| | | | +10% | ~~6,900~~ 3100 |
| | | | | 34,000 ~~75,850~~ LB TANK |
| | | WT. OF WATER | | 625,700 LB WATER |

| | 3" | 4" | 6" |
|---|---|---|---|
| FILL LINE SIZE (INLET) | 3" | 4" | 6" |
| FILL RATE (APPROX.), GPM | 52 | 106 | 312 |
| FILL TIME (APPROX), HR (4% WITHDRAWAL) | 24 | 12 | 4 |

FORM 62-114
REV. 4-75

# Stearns-Roger



JOB NO. C25393 DATE 3-23-82 BY AWM CH'K.
CUSTOMER MARTIN MARIETTA PROJECT 100 MWe PV CENTRAL POWER STA.
SUBJECT ARRAY WASH WATER SUPPLY SYSTEM

## WATER TREATMENT

BASED ON THE WELL WATER ANALYSES FOR THE SAGUARO PLANT MARTIN MARIETTA HAS DETERMINED THAT NO TREATMENT IS REQUIRED. THE EXISTING WATER CHEMISTRY IS JUGDED TO BE SATISFACTORY AS IS FOR PV WASH WATER.

IN THE EVENT THAT WASH WATER QUALITY REQUIREMENTS SHOULD CHANGE, SUFFICIENT SPACE SHOULD BE ALLOWED FOR FUTURE WATER TREATING EQUIPMENT AND DEMINERALIZED WATER TANK.

FORM 62-114
REV. 4-75

# Stearns-Roger

PAGE 2 - 1WT

JOB NO. 25393 DATE 3/30/82 BY DGP CH'K.

CUSTOMER MMC PROJECT PV

SUBJECT Water tank foundations

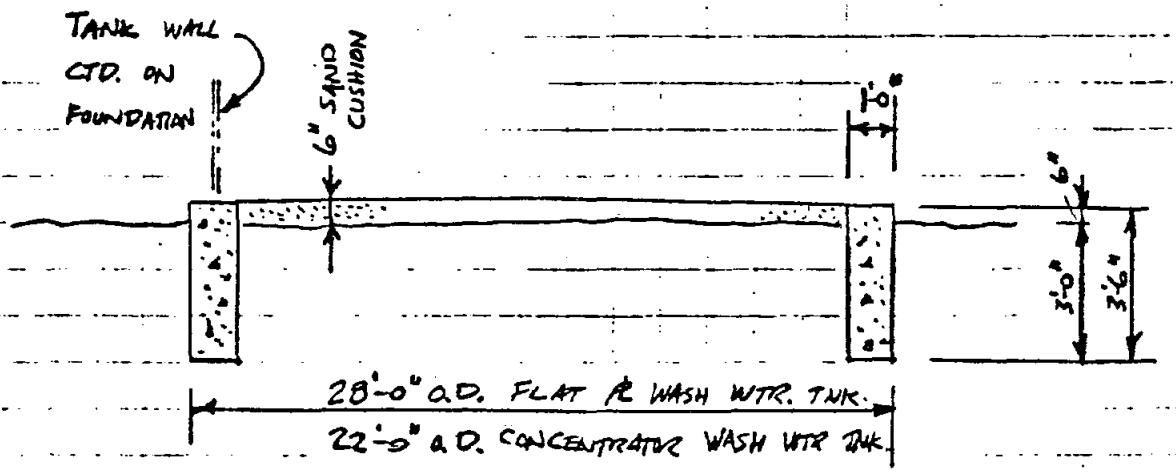


SECTION VIEW OF WASH WATER
TANK FOUNDATIONS

ONE REQD EACH FIELD

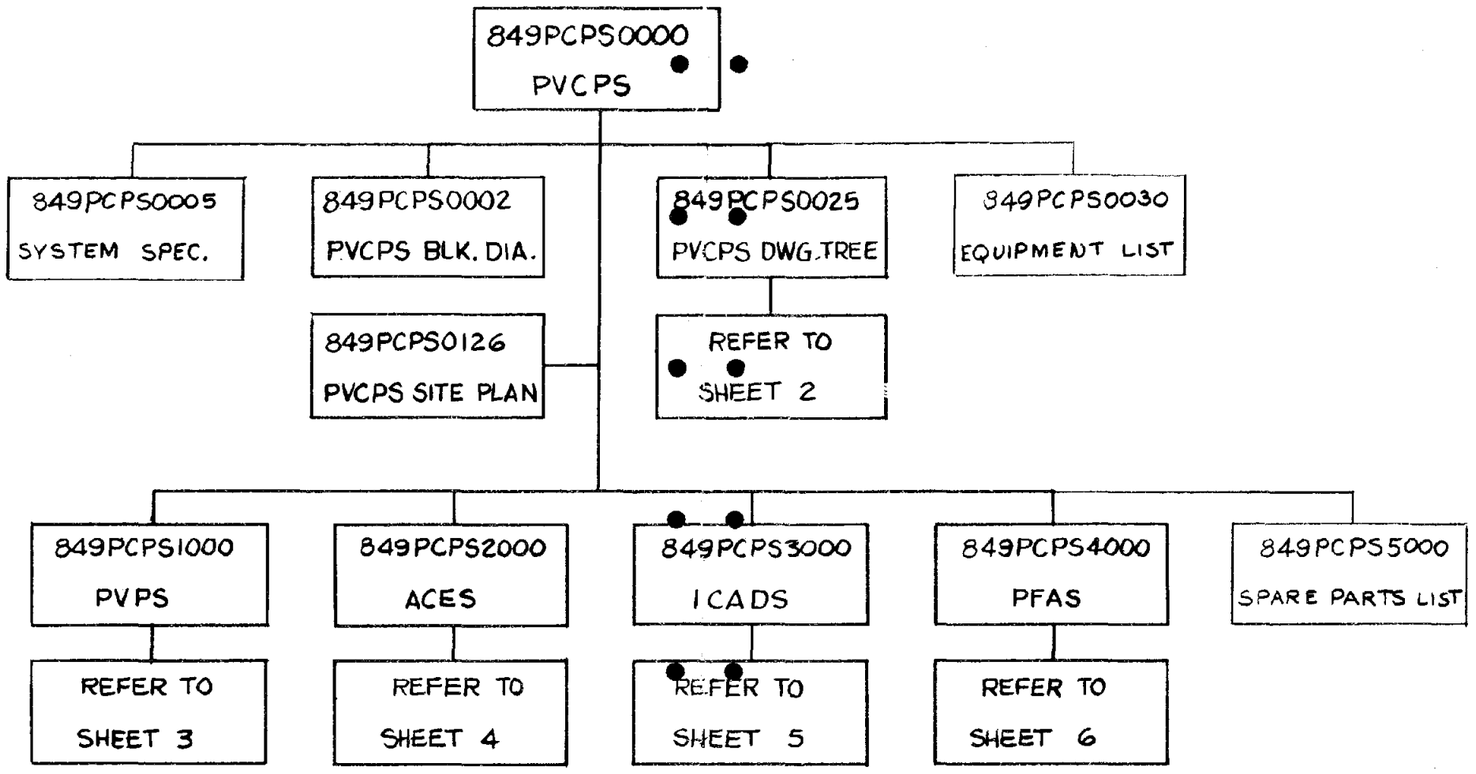


PVCPS DRAWING TREE
FLAT PLATE

| MARTIN MARIETTA CORPORATION<br>DENVER DIVISION, P.O. BOX 179<br>DENVER, COLORADO 80201 | SIZE | FSCM NO. | DWG NO. | REV |
|---|---|---|---|---|
| DRAWN BY R. CHURCH | B | 04236 | 849PCPS0025 | |
| | SCALE — | | | SHEET 1 OF 6 |

BRÜNING 44-141 38333

E-432D (6-78)

| Drawing Number | Description | Drawing Size |
|---|---|---|
| 849PCPS0002 | PVCPS Block Diagram | B |
| 849PCPS0025 | PVCPS Drawing Tree | B |
| 849PCPS0126-2 | Site Plan - Flat Plate PV | D |
| 849PCPS1000 | PVPS Drawing List | A |
| 849PCPS2000 | ACES Drawing List | A |
| 849PCPS3000 | ICADS Drawing List | A |
| 849PCPS4000 | PFAS Drawing List | A |

| Drawing Number | Description | Drawing Size |
|---|---|---|
| 849PCPS1000 | PVPS Drawing List | - |
| 849PCPS1152 | DC Distribution Box Grounding/Lightning Protection | A |
| 849PCPS1226 | Field Layout - Flat Plate PV | D |
| 849PCPS1227 | 5MW Subfield Layout - Flat Plate PV | D |
| 849PCPS1228 | Electrical Underground Power Cable - Typical Flat Plate Subfield | D |
| 849PCPS1230 | Flat Plate Array Assembly | E |
| 849PCPS1241 | Flat Plate Array Foundation | A |
| 849PCPS1242 | Grounding/Lightning Protection | A |

| Drawing Number | Description | Drawing Size |
|---|---|---|
| 849PCPS2000 | ACES Drawing List | - |
| 849PCPS2001- 1 | One-Line Diagram 34.5kV Distribution System | C |
| 849PCPS2001- 2 | One-Line Diagram Saguaro 115 kV Switchyard - Bay 26 | B |
| 849PCPS2026- 1 | PVCPS 34.5/115 kV Switchyard & Operations Area | D |
| 849PCPS2026- 2 | Saguaro 115 kV Switchyard - Bay 26 | B |

| Drawing Number | Description | Drawing Size |
|---|---|---|
| 849PCPS3000 | ICADS Drawing List | - |
| 849PCPS3002 | ICADS Block Diagram | E |
| 849PCPS3026 | ICADS Field Installation | E |

| SIZE | FSCM NO. | DWG NO. | REV |
|---|---|---|---|
| A | 04236 | 849PCPS0025 | |
| SCALE | PAGE D-5 | SHEET 5 of 6 | |

| Drawing Number | Description | Drawing Size |
|---|---|---|
| 849PCPS4000 | PFAS Drawing List | - |
| 849PCPS4031 | Control Buildings | D |
| 849PCPS4032 | Maintenance/Warehouse Building | D |
| 849PCPS4034 | Visitors Center | D |
| 849PCPS4041 | Grading Sections | D |

| SIZE | FSCM NO. | DWG NO. | REV |
|---|---|---|---|
| A | 04236 | 849PCPS0025 | |
| SCALE | PAGE D-6 | SHEET 6 of 6 | |

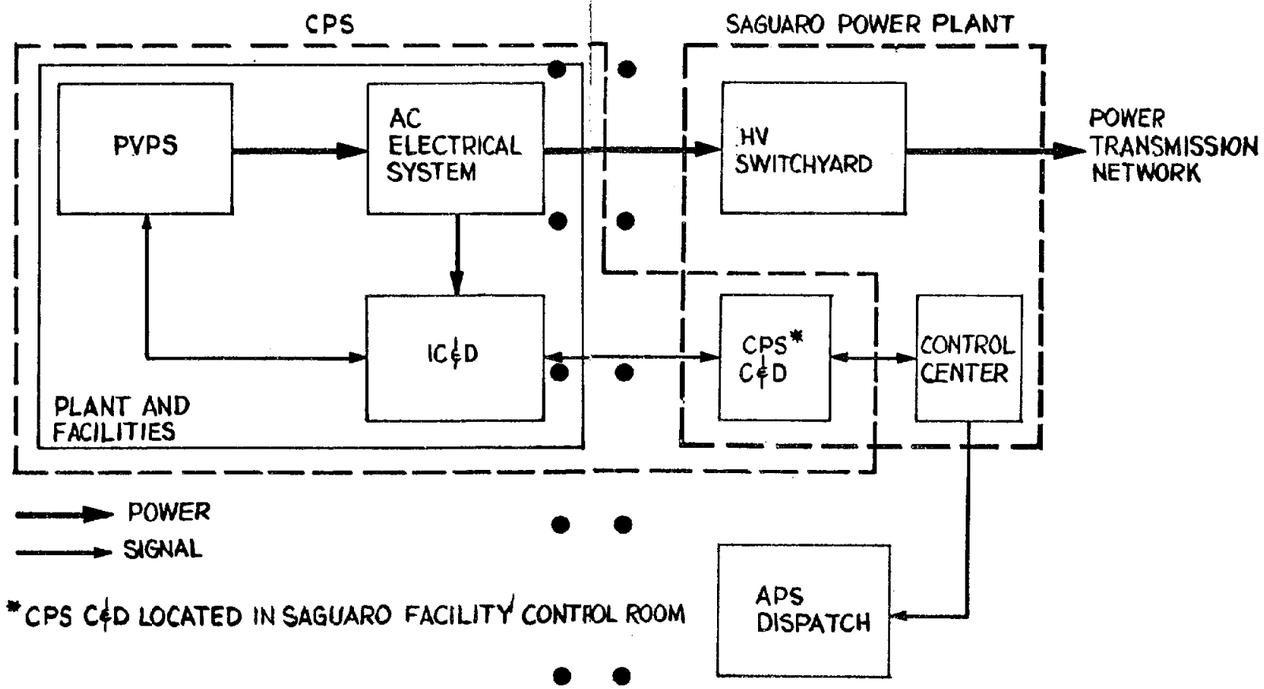


| | | | | |
|---|---|---|---|---|
| MARTIN MARIETTA CORPORATION<br>DINVER DIVISION, P.O. BOX 179<br>DINVER, COLORADO 80201<br>DRAWN BY R. CHURCH | SIZE B | FSCM NO. 04236 | DWG NO. PVCPS BLOCK DIAGRAM 849PCPS0002 | REV |
| | SCALE — | D-7 | SHEET 1 OF 1 | |

BRUNING 44-141 38333

E-432D (6-78)

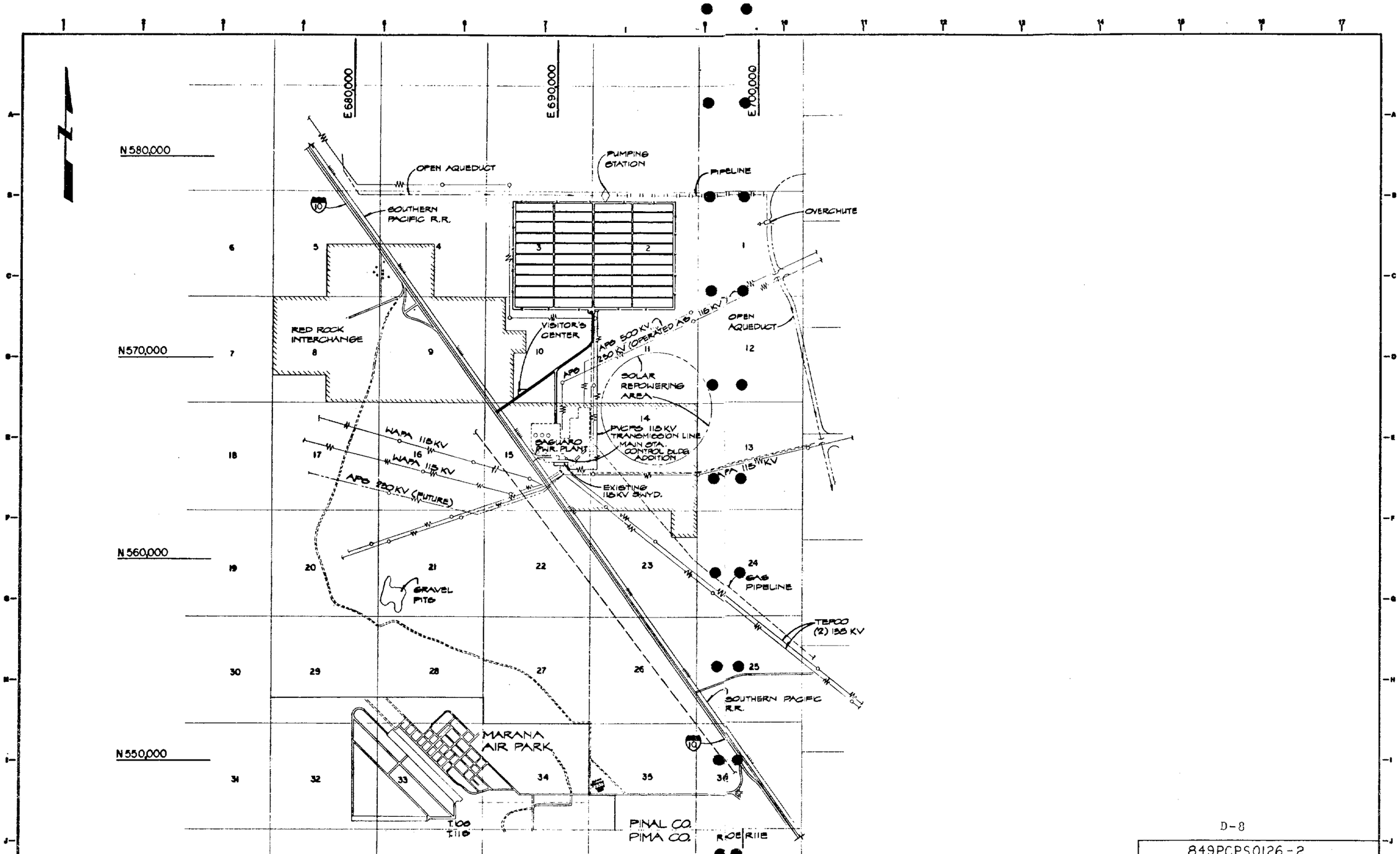


D-8

849PCPS0126-2

| REVISIONS | | | | | | | REFERENCE DRAWINGS |
|---|---|---|---|---|---|---|---|
| NO. | DATE | BY | CH'D | APP'D | NO. | | |

PRINT RECORD: DATE / FOR / REVISED / CUSTOMER / FIELD / INTRA CO

| ENG. RECORD | | |
|---|---|---|
| DRAWN | CL | 8/25/81 |
| CHECKED | | |
| MECH. CK | | |
| STRUCT. CK | | |
| ELECT. CK | | |
| P-PIMS CK | | |
| INSTR. CK | | |
| CIVIL CK | | |

| DRAWING STATUS | DATE |
|---|---|
| ISSUED | |
| PRELIMINARY | |
| FOR COMMENTS AND/OR APPROVAL | |
| APPROVED FOR CONSTRUCTION | |
| REVISED & APPROVED FOR CONSTRUCTION — REV | |

NOT APPROVED FOR CONSTRUCTION UNLESS SIGNED & DATED. DESTROY ALL PRINTS BEARING EARLIER DATE &/OR REVISION NO.

SITE PLAN
FLAT PLATE P.V.

10MW PHOTOVOLTAIC CENTRAL POWER STATION
SAGUARO POWER PLANT — RED ROCK, ARIZONA

SCALE 1"=2000'

**Stearns-Roger** ENGINEERING CORPORATION

ORDER NO C-25393

DWG. NO. 12K01-2

SHEET NO

REV

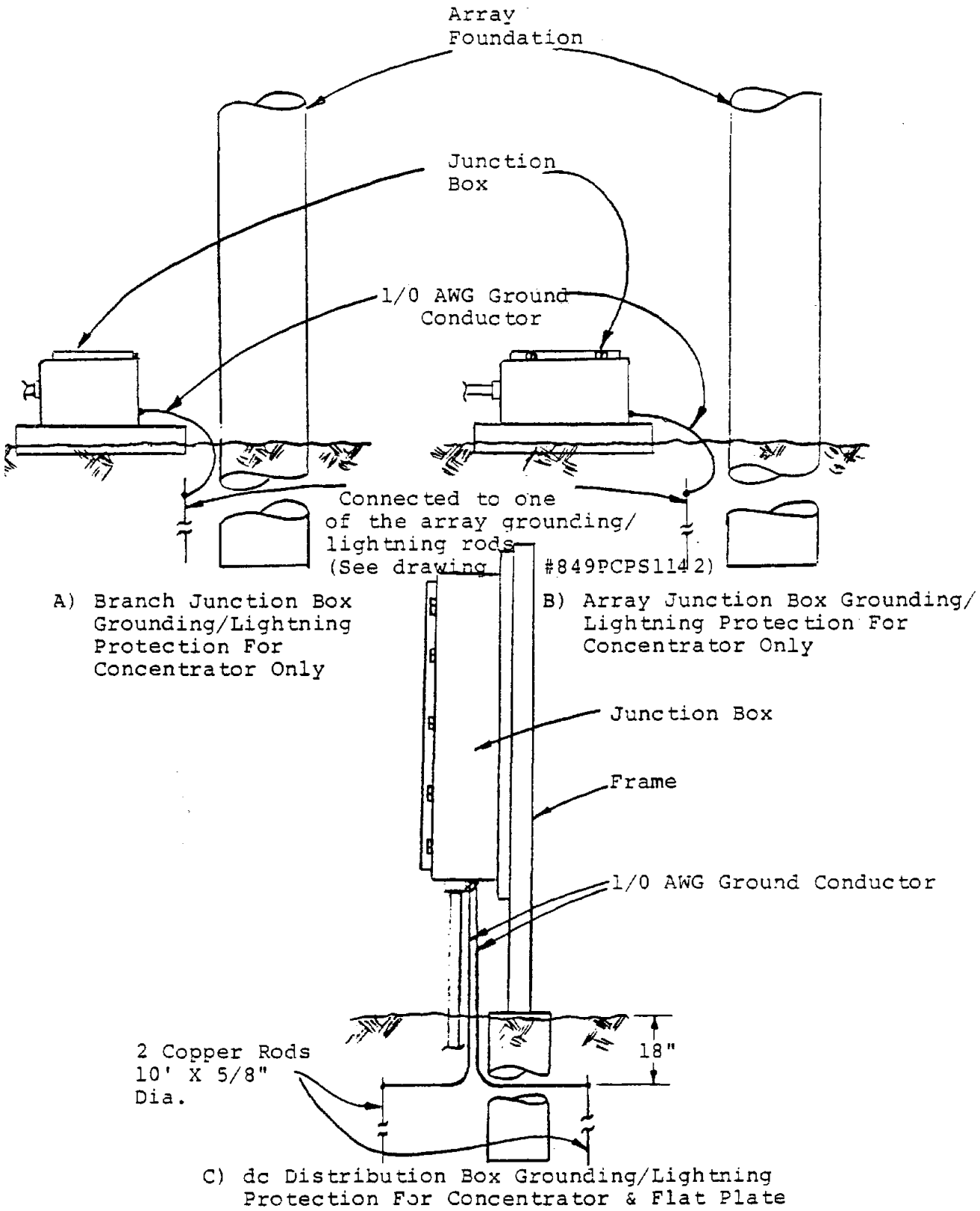


| SIZE | FSCM NO. | DWG NO. | REV |
|---|---|---|---|
| A | 04236 | 849PCPS1152 | |
| SCALE | PAGE D-9 | SHEET 1 | |

E-49D(5-78)

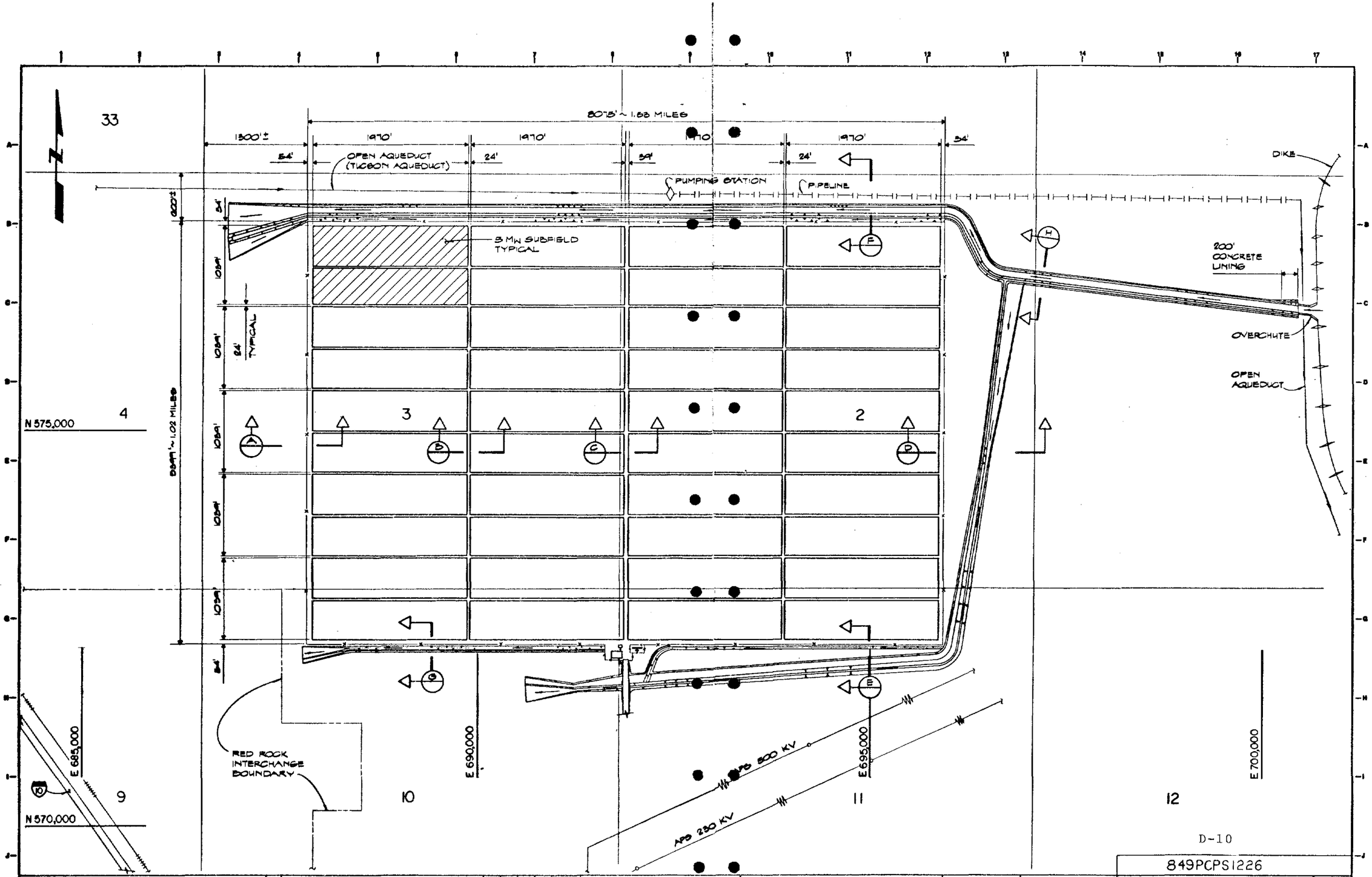


D-10

849PCPS1226

| NO. | REVISIONS | DATE | BY | CK'D | APP'D | NO. |
|---|---|---|---|---|---|---|
| | | | | | | |

REFERENCE DRAWINGS

PRINT RECORD: DATE / FOR / REVISED / CUSTOMER / FIELD / INTRA CO.

| ENG. RECORD | | |
|---|---|---|
| DRAWN | | 7/62 |
| CHECKED | | |
| MECH. CK. | | |
| STRUCT. CK. | | |
| ELECT. CK. | | |
| PIPING CK. | | |
| INSTR. CK. | | |
| CIVIL CK. | | |

| DRAWING STATUS | ISSUED | DATE |
|---|---|---|
| PRELIMINARY | | |
| FOR COMMENTS AND/OR APPROVAL | | |
| APPROVED FOR CONSTRUCTION | | |
| REVISED & APPROVED FOR CONSTRUCTION | REV | |

NOT APPROVED FOR CONSTRUCTION UNLESS ISSUED ABOVE. DISCARD PRELIMINARY PRINTS BEARING EARLIER DATE AND/OR REVISION NO.

FIELD LAYOUT
FLAT PLATE P.V.

100JW PHOTOVOLTAIC CENTRAL POWER STATION
SAGUARO POWER PLANT — RED ROCK, ARIZONA

SCALE 1" = 500'

Stearns-Roger
ENGINEERING CORPORATION

ORDER NO. C-25393

DWG. NO. 12K01-22

SHEET NO.

REV

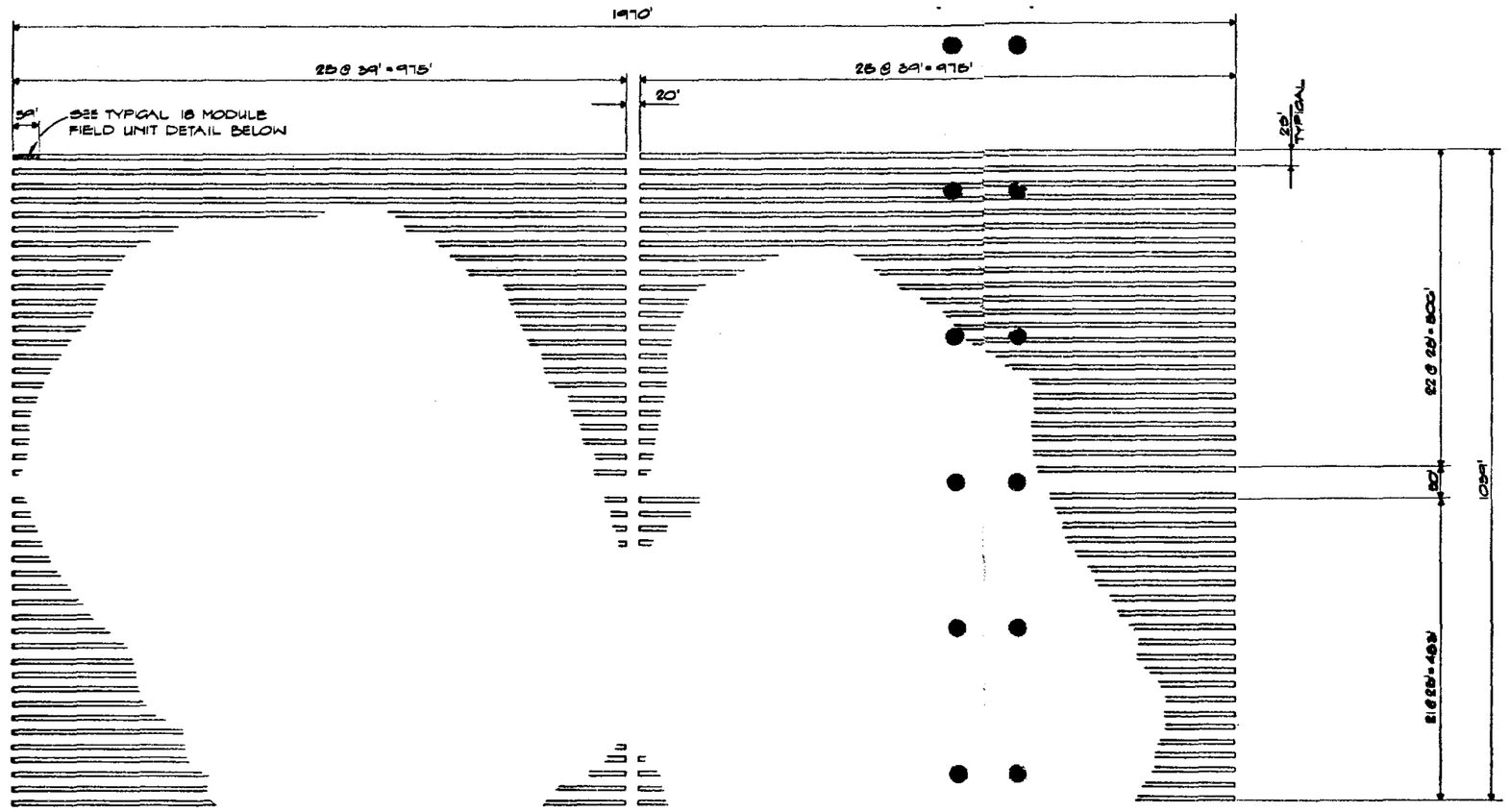


TYPICAL 5MW SUBFIELD

SCALE: 1"=100' (20 THUS)

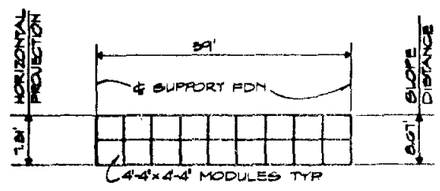


TYPICAL 18 MODULE FIELD UNIT

(2250 UNITS PER SUBFIELD)

D-11

849PCPS1227

| REVISIONS | | | | | | | REFERENCE DRAWINGS |
|---|---|---|---|---|---|---|---|
| SYM | | DATE | BY | CH'D | APP'D | NO | |

PRINT RECORD: DATE / FOR / REVISED / CUSTOMER / FIELD / INTRA CO

ENGR. RECORD: DRAWN CL 12/84 / CHECKED / MECH. CK. / STRUCT. CK. / ELECT. CK. / PIPING CK. / INSTR. CK. / CPYS. CK.

DRAWING STATUS: ISSUED / DATE — PRELIMINARY; FOR COMMENTS AND/OR APPROVAL; APPROVED FOR CONSTRUCTION; REVISED & APPROVED FOR CONSTRUCTION (REV.)

NOT APPROVED FOR CONSTRUCTION UNLESS DRAWING & DATED DETAILS ALL PRINTS BEARING EARLIER DATE & OR REVISION NO

5MW SUBFIELD LAYOUT
FLAT PLATE P.V.

100MW PHOTOVOLTAIC CENTRAL POWER STATION
SAGUARO POWER PLANT — RED ROCK, ARIZONA

SCALE 1"=200' — Stearns-Roger ENGINEERING CORPORATION — ORDER NO C-25393

DWG. NO 12K01-23 — SHEET NO — REV.

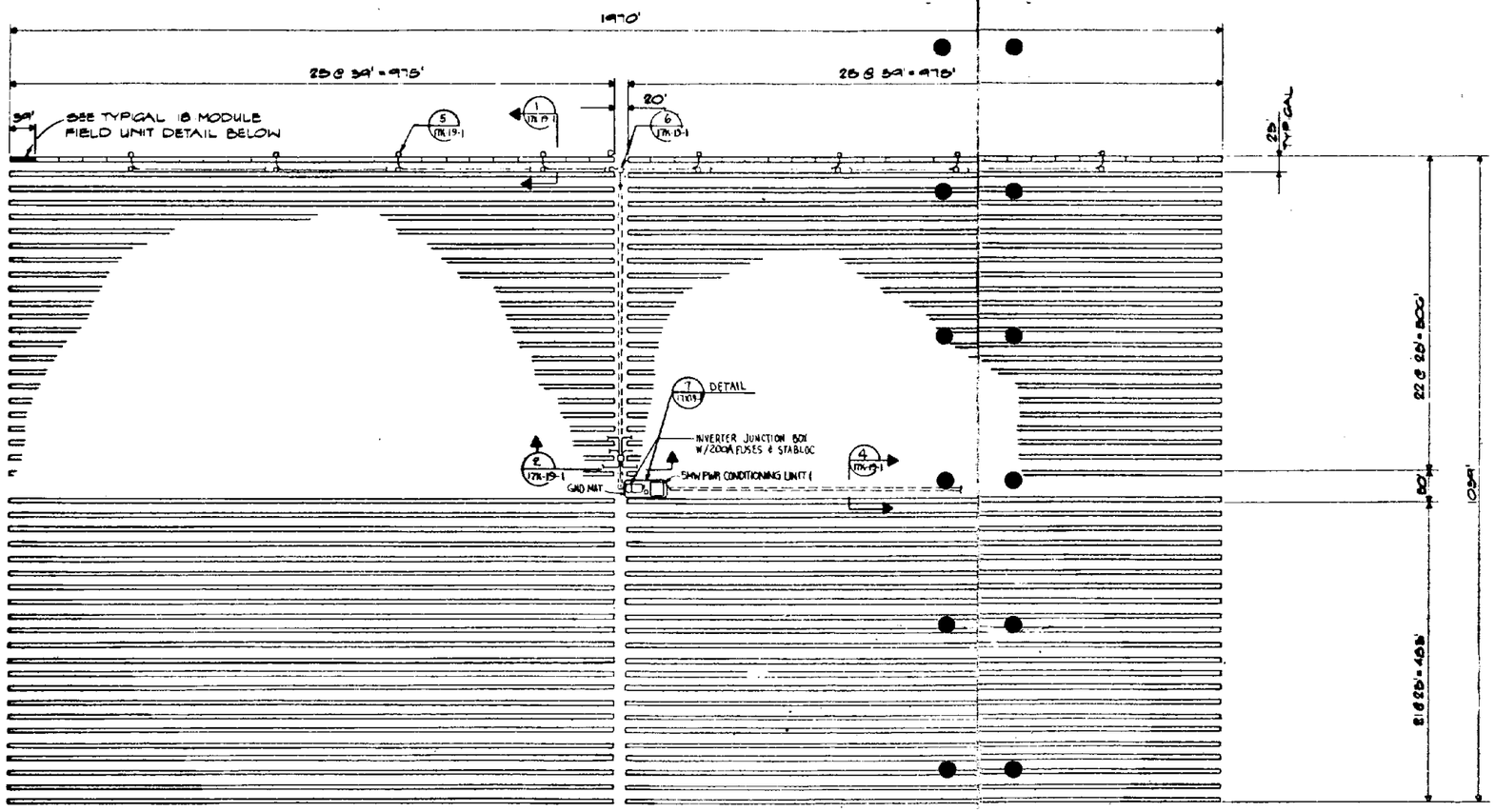


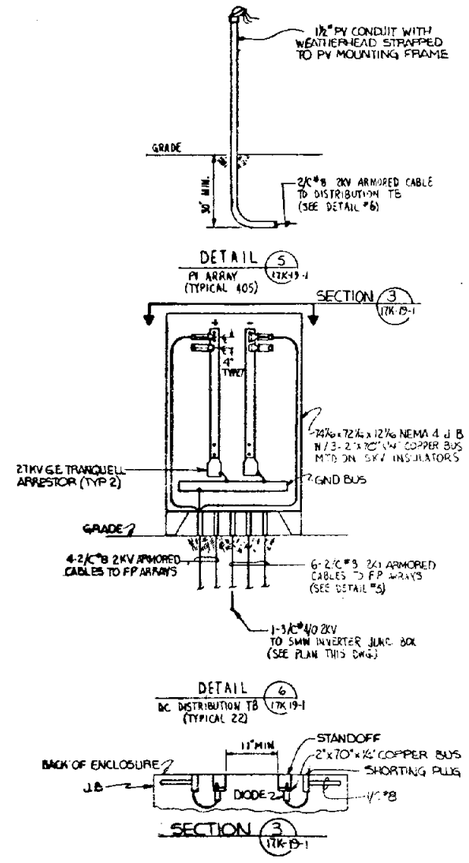

LIGHT SYMBOL H GUTH 817-605/277/PEC OR EQUAL

DETAIL 7 17K-19-1 POWER CONDITIONING UNIT NTS

## TYPICAL 5MW SUBFIELD

SCALE: 1"=100' (20 THUS)

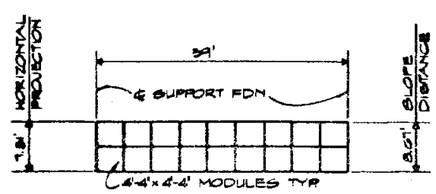


## TYPICAL 18 MODULE FIELD UNIT

(2250 UNITS PER SUBFIELD)

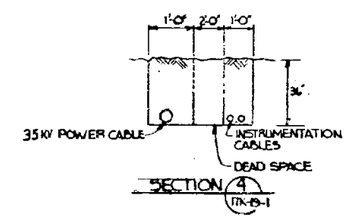


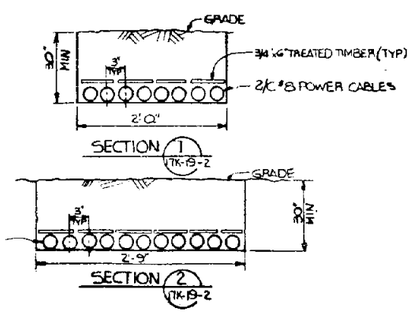


D-12

849PCPS1228

| NO. | REVISIONS | DATE | BY | CHK'D | APP'D | NO. | REFERENCE DRAWINGS |
|---|---|---|---|---|---|---|---|
| | | | | | | | |

PRINT RECORD: DATE / FOR / REVISED / CUSTOMER / FIELD / INTRA CO

| ENG. RECORD | | |
|---|---|---|
| DRAWN | K. YOUNG | 3-25-83 |
| CHECKED | | |
| MECH. CK. | | |
| STRUCT. CK. | | |
| ELECT. CK. | | |
| PIPING CK. | | |
| INSTR. CK. | | |
| CIVIL CK. | | |

| DRAWING STATUS | DATE |
|---|---|
| ISSUED | |
| PRELIMINARY | |
| FOR COMMENTS AND/OR APPROVAL | |
| APPROVED FOR CONSTRUCTION | |
| REVISED & APPROVED FOR CONSTRUCTION | |
| NOT APPROVED FOR CONSTRUCTION UNLESS SIGNED & DATED BEYOND ALL NOTES BEARING EARLIER DATE & OR REVISION NO. | |

ELECTRICAL UNDERGROUND POWER CABLE
TYPICAL FLAT PLATE SUBFIELD

100MW PHOTOVOLTAIC CENTRAL POWER STATION
SAGUARO POWER PLANT — RED ROCK, ARIZONA

SCALE: NONE

Stearns-Roger ENGINEERING CORPORATION

ORDER NO. C-25393

DWG. NO. 17K-19

SHEET NO. 1

REV. 0

| REVISIONS | | | | | |
|---|---|---|---|---|---|
| | | INITIAL RELEASE | DC PCSC 147 | | |

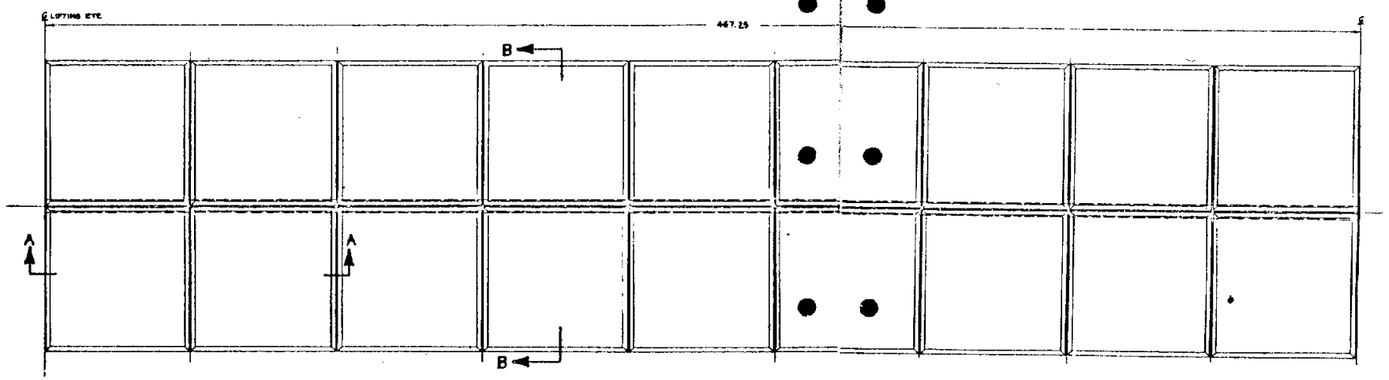


PLAN VIEW, FLAT PLATE PV MODULE & FRAME ASSY -029 & 030
SCALE: 3/4" = 1'-0"

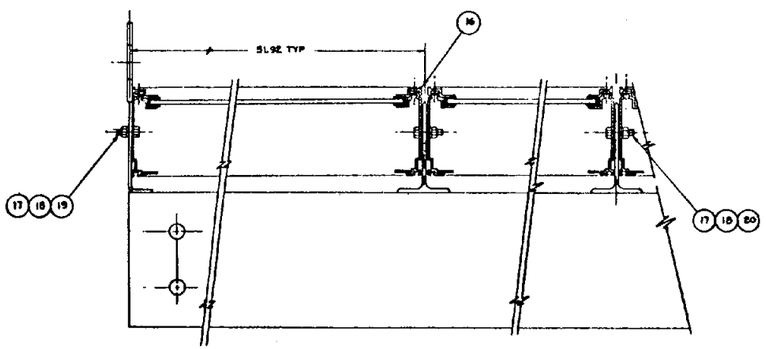


SECTION A-A
SCALE : HALF

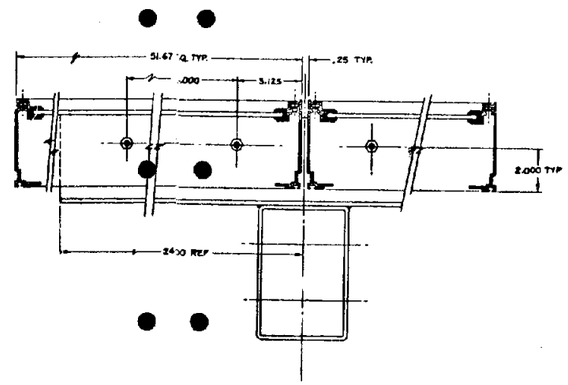


SECTION B-B ROTATED 90° CW
SCALE : HALF

NOTES
1. FINISH FOUNDATION TOPS SUITABLE FOR DIRECT MOUNTING OF ARRAYS WITHOUT SHIMS OR GROUT
   A) TOPS SHALL BE SMOOTH & LEVEL
   B) HOLD TOP ELEVATION TO ±1/16"
   C) HOLD HORIZ ALIGNMENT OF POSTS TO ±1/16"
2. STEEL FABRICATION TOLERANCE ±1/32" U.N.O.
3. USE E70XX WELDING ELECTRODES
4. CONCRETE SHALL CONFORM TO ACI BUILDING CODE 318-77 FOR $f'_c$ = 3,000 PSI
5. STRUCTURAL STEEL SHALL BE A 36 $f_y$ = 36 KSI KSI U.N.O EXCEPT FOR TUBES. SEE NOTE 10
6. REINFORCING STEEL SHALL BE ASTM GRADE 60, $f_y$ = 60,000 PSI
7. DEBURR FABRICATED METAL PARTS.
8. DEGREASE, PRIME & PAINT WHITE ENAMEL EXEPT FIND NO. 16
9. HOLES TO BE DUG FOR CAISSONS TO PROVIDE 2" MINIMUM COVER TO REBAR STEEL
10. SQUARE & RECTANGULAR TUBES SHALL BE STEEL A 500, GRADE C, $f_y$ = 50 KSI.

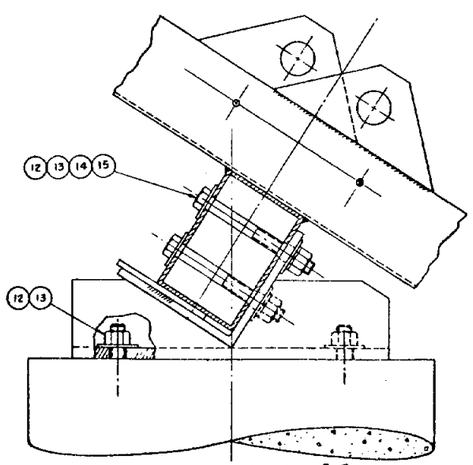


SECTION C-C
SCALE : HALF

| | | | | | | | | | | | | | |
|---|---|---|---|---|---|---|---|---|---|---|---|---|---|
| | | | | 4 | | | | HEX HD BOLT | .62-11 UNC x 7.5 LG | STL | | | EN PLT |
| | | | | | | | -050 | PV MODULE/FRAME EDGE | | | | | |
| | | | | | | | -029 | PV MODULE/FRAME INT'ERIOR | | | | | |
| | | | | | | | -019 | FOUNDATION MOUNT | | | | | |
| | | | | | | | -010 | PANEL FRAME, EDGE | | | | | |
| | | | | | | | -009 | PANEL FRAME, INTERIOR | | | | | |
| | | | | 32 | 32 | | | 20 HEX HD CAP SCREW | .25-20 UNC x 1.0 LG | STL | GRADE 5 | | EN PLT |
| | | | | 8 | 8 | | | 19 HEX HD CAP SCREW | .25-20 UNC x .75 LG | STL | GRADE 5 | | EN PLT |
| | | | | 40 | 40 | | | 18 LOCKWASHER | .25 I.D. SPRING TYPE | STL | | | EN PLT |
| | | | | 40 | 40 | | | 17 HEX NUT | .25-20 UNC | STL | SELF LOCKING | | EN PLT |
| | | | | 18 | 18 | | | 16 FL PLT. PV MODULE | | WESTINGHOUSE | DENDRITIC WEB | | |
| | | | | | 4 | | | 15 HEX HD BOLT | .62-11 UNC x 5.5 LG | STL | | | EN PLT |
| | | | | 4 | 4 | | | 14 LOCKWASHER | SPRING TYPE .62 | STL | | | EN PLT |
| | | | | 4 | 4 | | | 13 PLAIN WASHER | .62 I.D. NOM | STL | | | EN PLT |
| | | | 2 | 4 | 4 | | | 12 HEX NUT | .62 11 UNC | STL | | | EN PLT |
| | | | 2 | | | | | 11 ANCHOR BOLT | .62-11 UNC x 18 LG | STL | | | EN PLT |
| | | | 1/2 | | | | | 10 LONGITUDINAL REBAR | | STL | | | |
| | | | 1/2 | | | | | 9 CONCRETE | | | | | |
| | | | | | | | -020 | FOUNDATION ASSY | | | | | |
| 1 | | | | | | | | 8 PLT. | .25 x 4.5 x 10.75 | | | | |
| 1 | | | | | | | | 7 ANGLE | 6.0 x 6.0 x .75 x 0.25 | STL | | | |
| 1 | | | | | | | | 6 CHANNEL | MC 3.75 x 4.1 x 14.25 | STL | | | |
| 2 | 2 | | | | | | | 5 LIFTING EYE | 3.75 x 3.75 x .25 THK | STL | 1020 | | |
| 2 | 2 | | | | | | | 4 ANGLE | 4.0 x 3.0 x .12 THK x 4'-0 | STL | | | |
| 8 | 8 | | | | | | | 3 TEE | MT 4 x 3.25 x 4'-0 | STL | | | |
| 1 | | | | | | | | 2 SQ TUBE | 6" x 6" x .250 WALL x 3'-9 | STL | | | |
| | 1 | | | | | | | 1 RECT TUBE | 4" x 6" x .187 WALL x 3'-9 | STL | | | |

LIST OF MATERIAL

| | |
|---|---|
| DRAWN BY | R. CHURCH 0550 APR 16, 82 |
| | Reviewed 0550 4-21-82 |
| | 4-21-82 |
| | MARTIN MARIETTA CORPORATION |
| | P.V. FLAT PLATE ASSEMBLY AND FOUNDATION DETAILS |
| SIZE | E |
| CODE IDENT NO | 04236 |
| DWG NO | 849PCPS1230 |
| SCALE | NOTE |
| SHEET | 1 OF 2 |

| REV | ZONE | REVISIONS DESCRIPTION | DATE | APPROVED |
|---|---|---|---|---|
| | | INITIAL RELEASE DC PCSM-147 | 4-16-92 | |

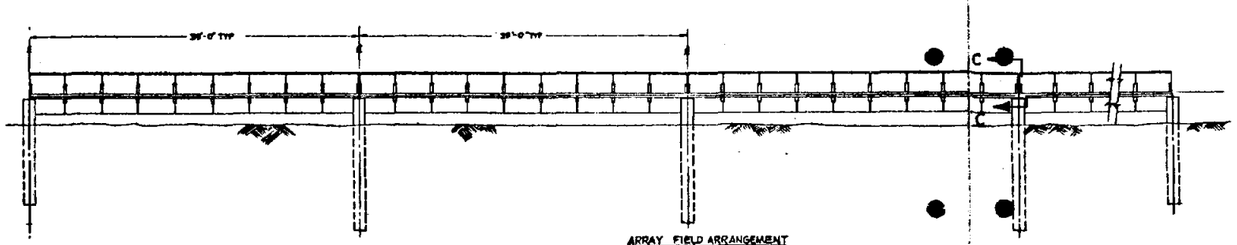


ARRAY FIELD ARRANGEMENT
SCALE : 3/32" = 1'-0"

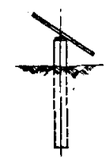

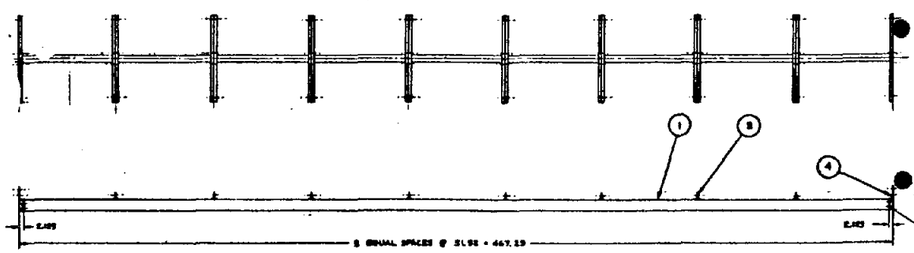


PANEL FRAME, INTERIOR - 009
SCALE : 1/2" = 1'-0"

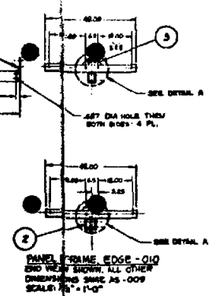


PANEL FRAME, EDGE - 010
END VIEW SHOWN, ALL OTHER DIMENSIONS SAME AS - 009
SCALE: 1/2" = 1'-0"

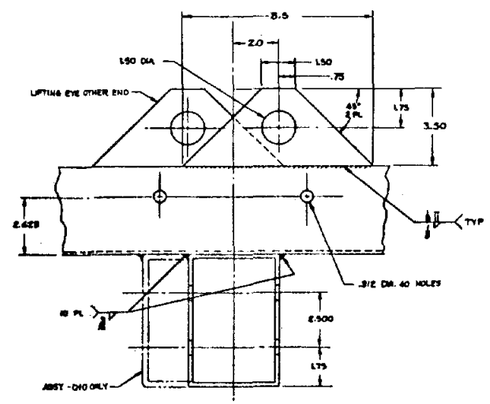


DETAIL "A"
SCALE: HALF

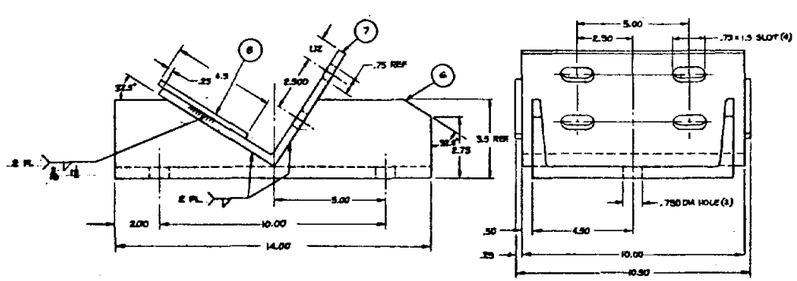


FOUNDATION MOUNT, -019
SCALE : HALF

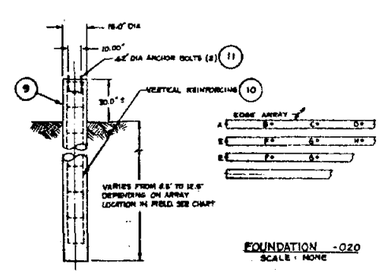


FOUNDATION -020
SCALE : NONE

| LOCATION | PENETRATION | QUANTITY |
|---|---|---|
| A | 9.5' | 80 |
| B | 12.5' | 80 |
| C & D | 11.75' | 1920 |
| E | 8.5' | 1720 |
| F | 10.33' | 1720 |
| G & H | 9.0' | 4280 |
| TOTAL | | 14,800 |

D-14

| | | | |
|---|---|---|---|
| SANYO SANKEYO CORPORATION | E | 84238 | 849PCPS1230 |
| DRAWN BY: E. CHURCH | SCALE: NOTED | | SHEET 2 OF 2 |

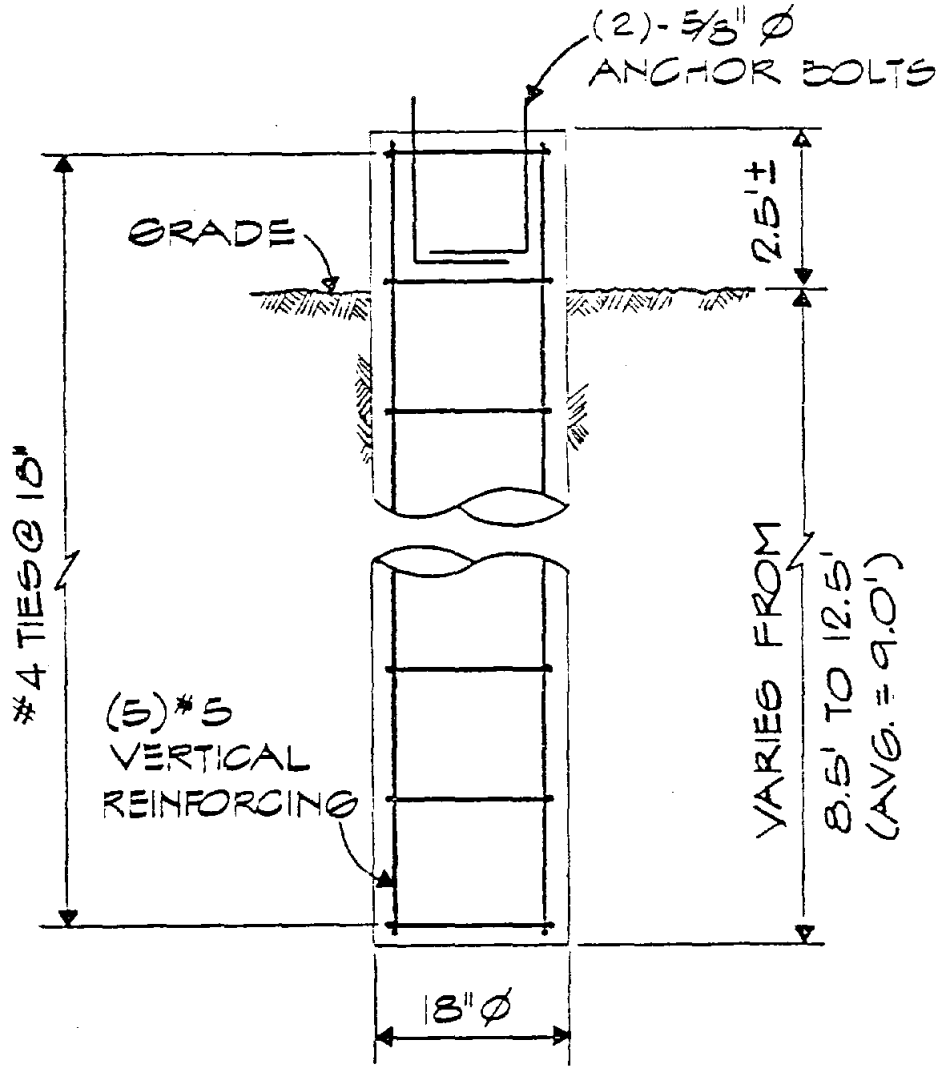


# FLAT PLATE PIER FOUNDATION

46,800 TOTAL

| | |
|---|---|
| | 849PCPS1241 |
| FLAT PLATE ARRAY FOUNDATION | Stearns-Roger |
| | DRW. / CHK. / DRAWING NO. 15K 36-21 |
| | APP. |

FORM F72275

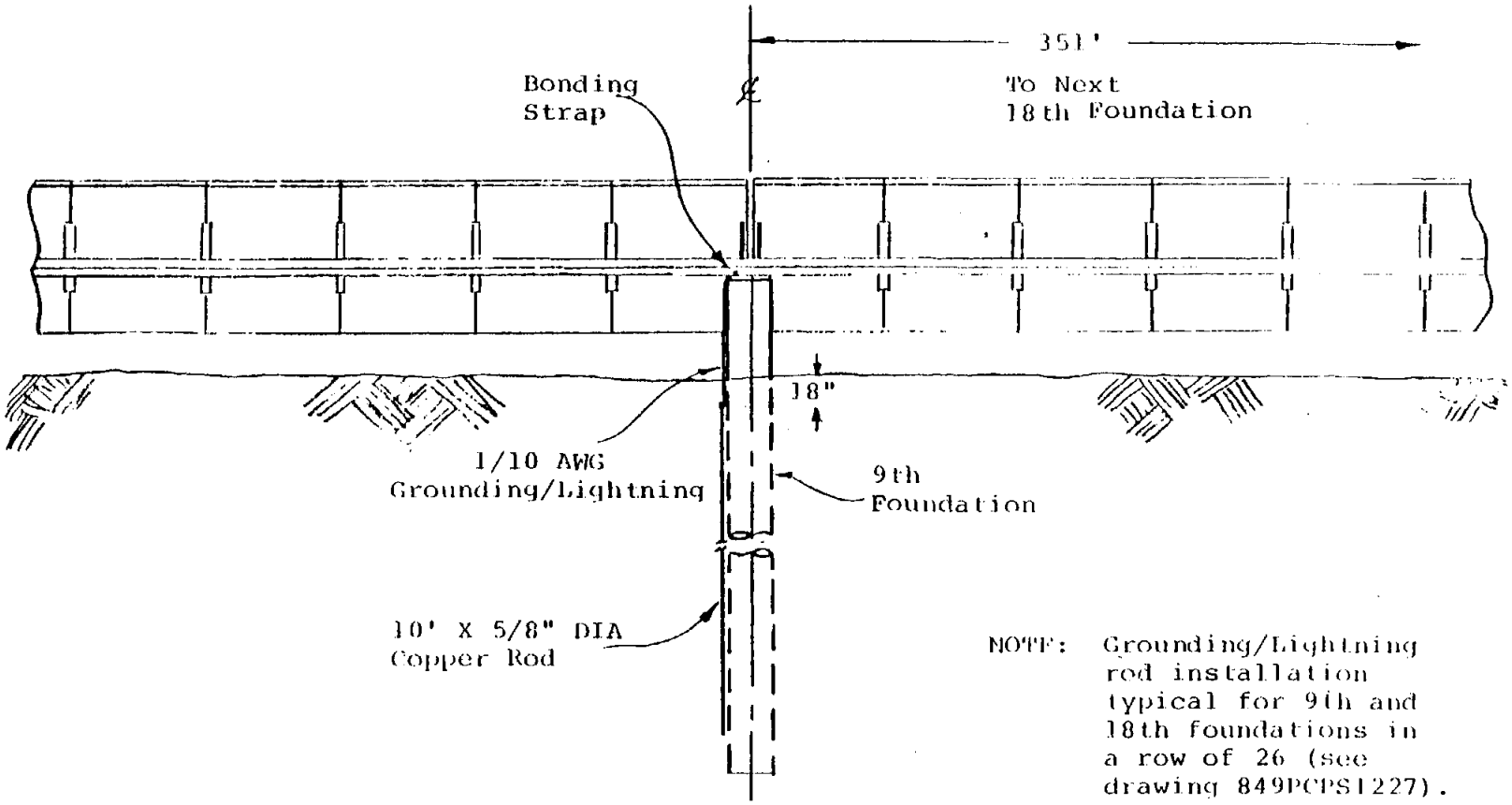


NOTE: Grounding/Lightning rod installation typical for 9th and 18th foundations in a row of 26 (see drawing 849PCPS1227).

GROUNDING/LIGHTNING PROTECTION

| SIZE | FSCM NO. | DWG NO. | REV |
|---|---|---|---|
| A | 04236 | 849PCPS1242 | |

SCALE | PAGE D-16 | SHEET 1

E-49D(5-78)

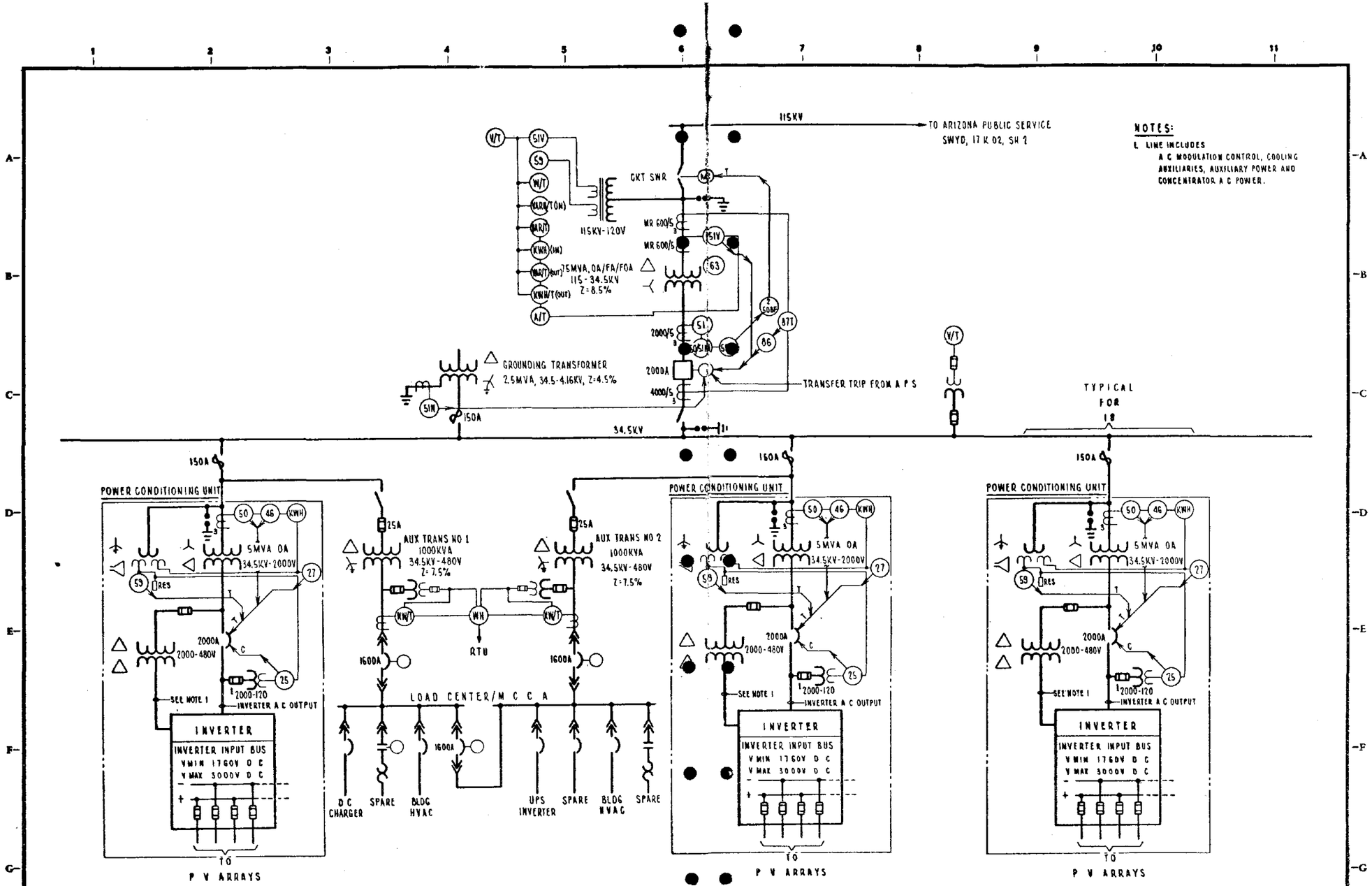


849PCPS2001-1

| NO. | REVISIONS | DATE | BY | CK'D | APP'D | NO. | REFERENCE DRAWINGS |
|---|---|---|---|---|---|---|---|
| | | | | | | | |

PRINT RECORD: DATE / FOR / REVISED / CUSTOMER / FIELD / INTRA CO.

| ENG. RECORD | | |
|---|---|---|
| DRAWN | WPB | 3-3-87 |
| CHECKED | | |
| MECH. CK. | | |
| STRUCT. CK. | | |
| ELECT. CK. | | |
| PIPING CK. | | |

DRAWING STATUS: ISSUED / DATE — PRELIMINARY FOR COMMENTS AND/OR APPROVAL; APPROVED FOR CONSTRUCTION; REVISED & APPROVED FOR CONSTRUCTION; REV.

NOT APPROVED FOR CONSTRUCTION UNLESS SIGNED & DATED BELOW; ALL PRINTS DEPICTING SUBLIES DATE 8/86 REVISION NO.

ONE LINE DIAGRAM
34.5 KV DISTRIBUTION SYSTEM

100MW PHOTOVOLTAIC CENTRAL POWER STATION
SAGUARO POWER PLANT — RED ROCK, ARIZONA

SCALE N/A — Stearns-Roger INCORPORATED — ORDER NO. C-25393

DWG. NO. 17K02 — SHEET NO. 1 — REV. 0

Form No. 13279/3-81

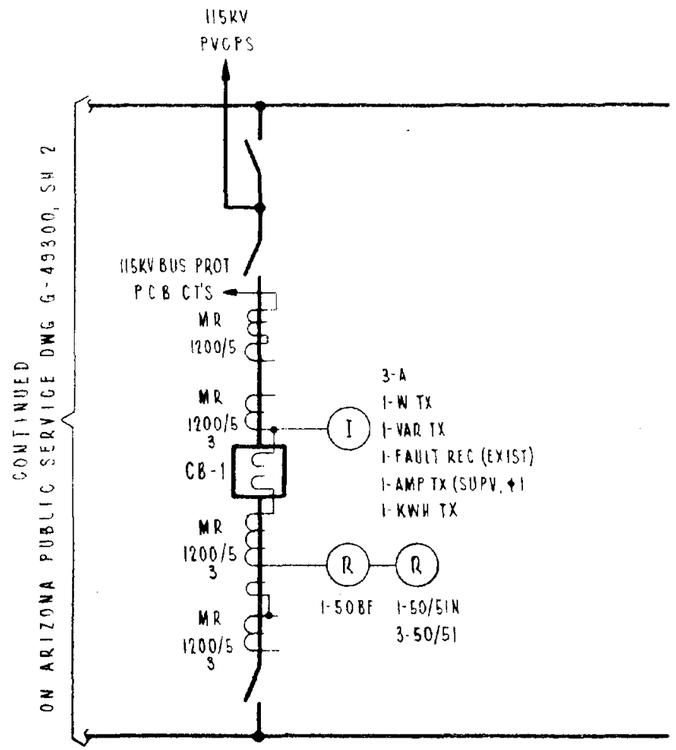


| BILL OF MATERIAL | |
|---|---|
| DEVICE NO | MANUFACTURER & NUMBER |
| 50BF | (W) KC-4 OR SI |
| 50/51N | (W) CO-6 |
| 50/51 | (W) CO-6 |
| AMMETER | G E AD-40 |
| WATT TX | SCIENTIFIC COLUMBUS EXCELTRONIC MODEL XL-A2 |
| VAR TX | " " " " XLV-A2 |
| AMP TX | " " " " CT510A2 |
| KWH TX | " " DIGILOGIC MODEL XL-A2-6070/6096 |

| DEVICE | LOCATION |
|---|---|
| | |

| REVISIONS | | | |
|---|---|---|---|
| NO | DESCRIPTION | BY | DATE |
| | | | |

| PRINT RECORD | | | | | | | | BY | DATE |
|---|---|---|---|---|---|---|---|---|---|
| REVISION | | | | | | | DRAWN | WPB | 3-3-82 |
| DATE ISSUED | | | | | | | DESIGNED | | |
| CUSTOMER | | | | | | | CHECKED | | |
| FIELD | | | | | | | APPROVED | | |
| INTRA CO | | | | | | | | | |

849PCPS2001-2

ONE LINE DIAGRAM
SAGUARO 115 KV SWITCHYARD
BAY 26

100MW PHOTOVOLTAIC CENTRAL POWER STATION
SAGUARO POWER PLANT RED ROCK, ARIZONA

Stearns-Roger
ENGINEERING CORPORATION

ORDER NO. C-25393

DWG. NO. 17K02

SHEET NO. 2

REV. 0

IGS NO. 30400401

(REV. 3-81)

JF 30.40.04

| SYMBOL | VOLTS | LAMP WATTS | LAMP DESCRIPTION | TOTAL WATTS INCLUDING BALLAST | DESCRIPTION | MFR & CAT. NO |
|---|---|---|---|---|---|---|
| HA | 277 | 250 | HIGH PRESSURE SODIUM | 290 | FLOODLIGHT WITH MAST FITTER ADAPTER | WIDELITE BS-250-C277-Y W/ MF-4 ADAPTER |
| HB | 277 | 100 | HIGH PRESSURE SODIUM | 140 | GLASS REFRACTOR, WIDE SPREAD DIST. INTEGRAL BALLAST WITH DUSK-DAWN CONTROL | GUTH B17-605/277/PEC |

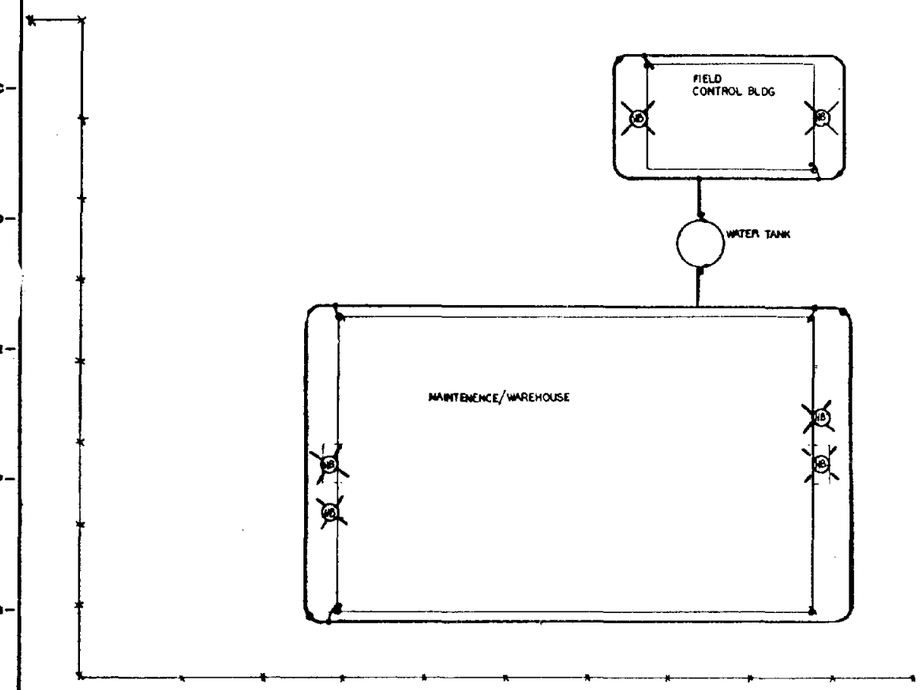


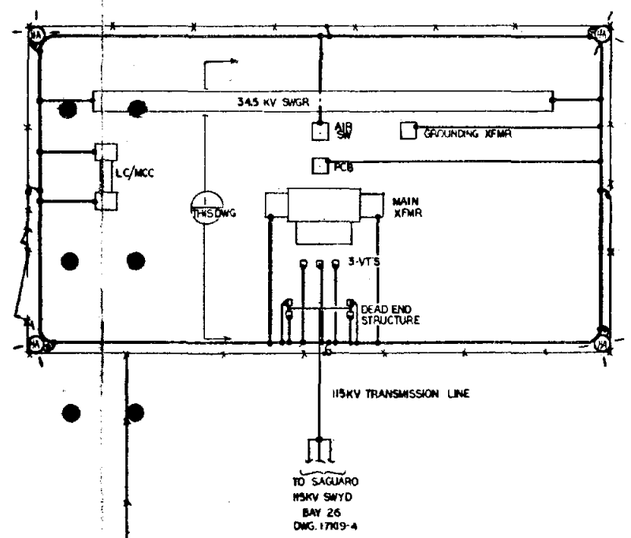


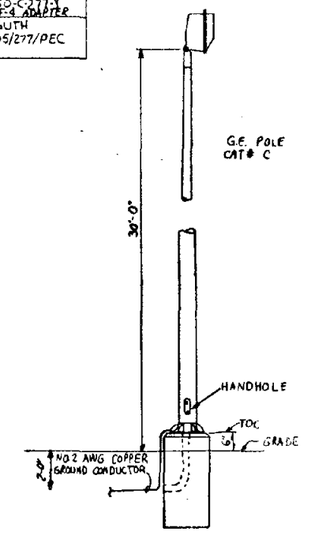


TYP. FLOODLIGHT INSTALLATION
NTS

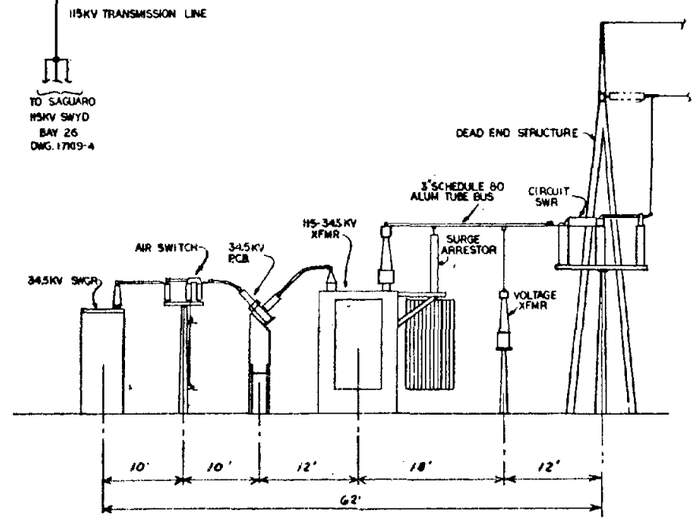


DETAIL 1 THIS DWG
SCALE 1/8"=1'-0"
ELEVATION - PVCPS SWITCHYARD

D-19

849PCPS2026-1

| REVISIONS | DATE | BY | CHK'D | APP'D | NO | REFERENCE DRAWINGS |
|---|---|---|---|---|---|---|

PRINT RECORD: DATE / FOR / REVISED / CUSTOMER / FIELD / INTRA CO

ENG. RECORD: DRAWN / CHECKED / MECH OK / STRUCT OK / ELECT OK / PIPING OK / INSTR OK / CIVIL OK

DRAWING STATUS: ISSUED / DATE — PRELIMINARY; FOR COMMENTS AND/OR APPROVAL; APPROVED FOR CONSTRUCTION; REVISED & APPROVED FOR CONSTRUCTION (REV); NOT APPROVED FOR CONSTRUCTION UNLESS SIGNED & DATED. DESTROY ALL PRINTS BEARING EARLIER DATE & OR REVISION NO.

PVCPS 34.5/115KV SWITCHYARD & OPERATIONS AREA

100MW PHOTOVOLTAIC CENTRAL POWER STATION
SAGUARO POWER PLANT — RED ROCK, ARIZONA

SCALE: NONE
Stearns-Roger ENGINEERING CORPORATION
ORDER NO. C-25393
DWG NO. 17K-19-
SHEET NO. 3
REV

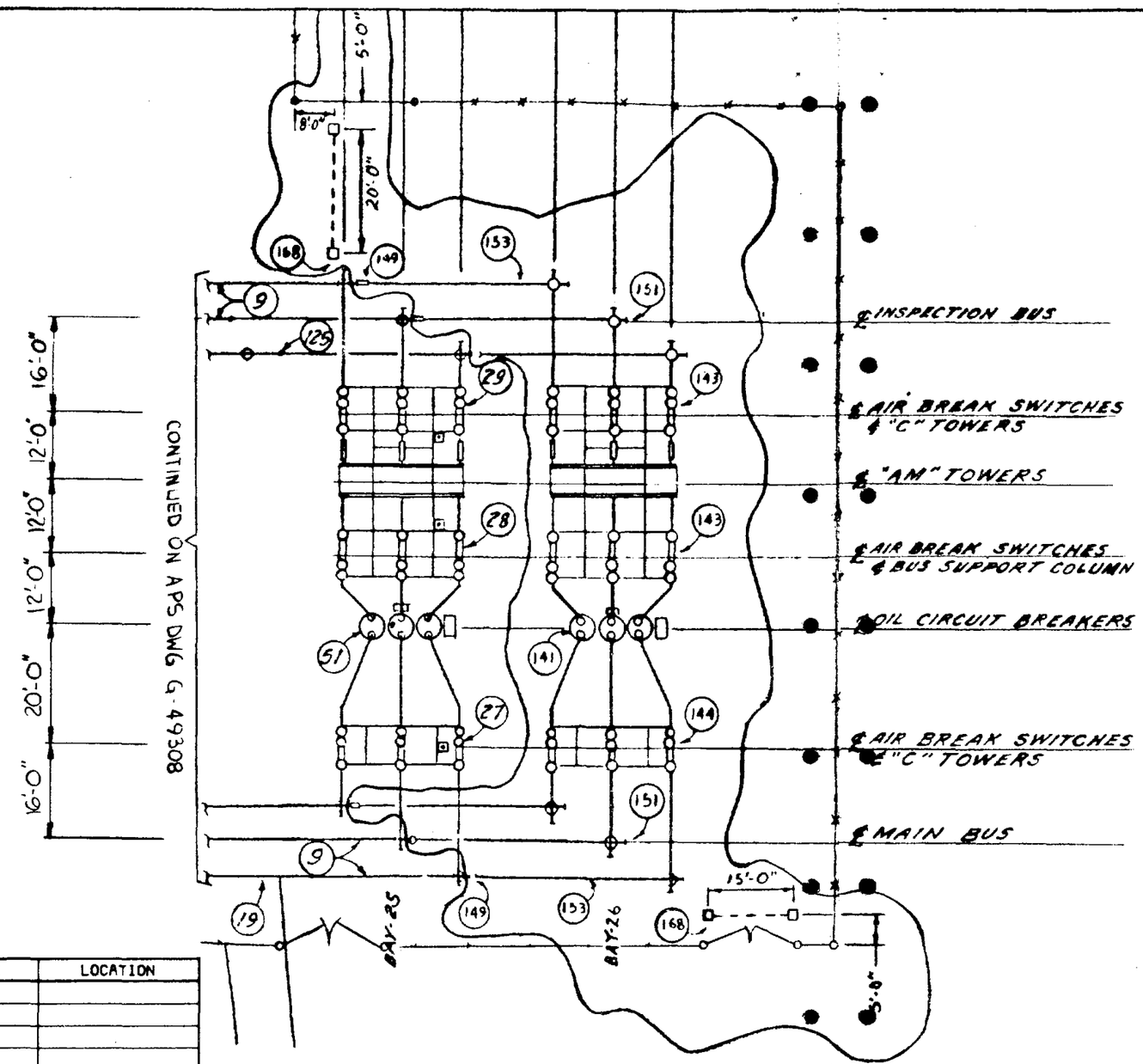


| DEVICE | LOCATION |
|---|---|
| | |

| REVISIONS | | | |
|---|---|---|---|
| NO | DESCRIPTION | BY | DATE |
| | | | |

| PRINT RECORD | | | | | | | | BY | DATE |
|---|---|---|---|---|---|---|---|---|---|
| REVISION | △ | △ | △ | △ | △ | △ | DRAWN | E | 3-3-82 |
| DATE ISSUED | | | | | | | DESIGNED | | |
| CUSTOMER | ● | ● | | | | | CHECKED | | |
| FIELD | | | | | | | APPROVED | | |
| INTRA CO | | | | | | | | | |

849PCPS2026-2

SAGUARO 115KV SWITCHYARD
BAY 26

100MW PHOTOVOLTAIC CENTRAL POWER STATION
SAGUARO POWER PLANT RED ROCK, ARIZONA

Stearns-Roger
ENGINEERING CORPORATION

ORDER NO. C-25393

DWG. NO. 17K-19-
SHEET NO. 4
REV. △

IGS NO. 30400401

(REV.3-81)

JF 30.40.04

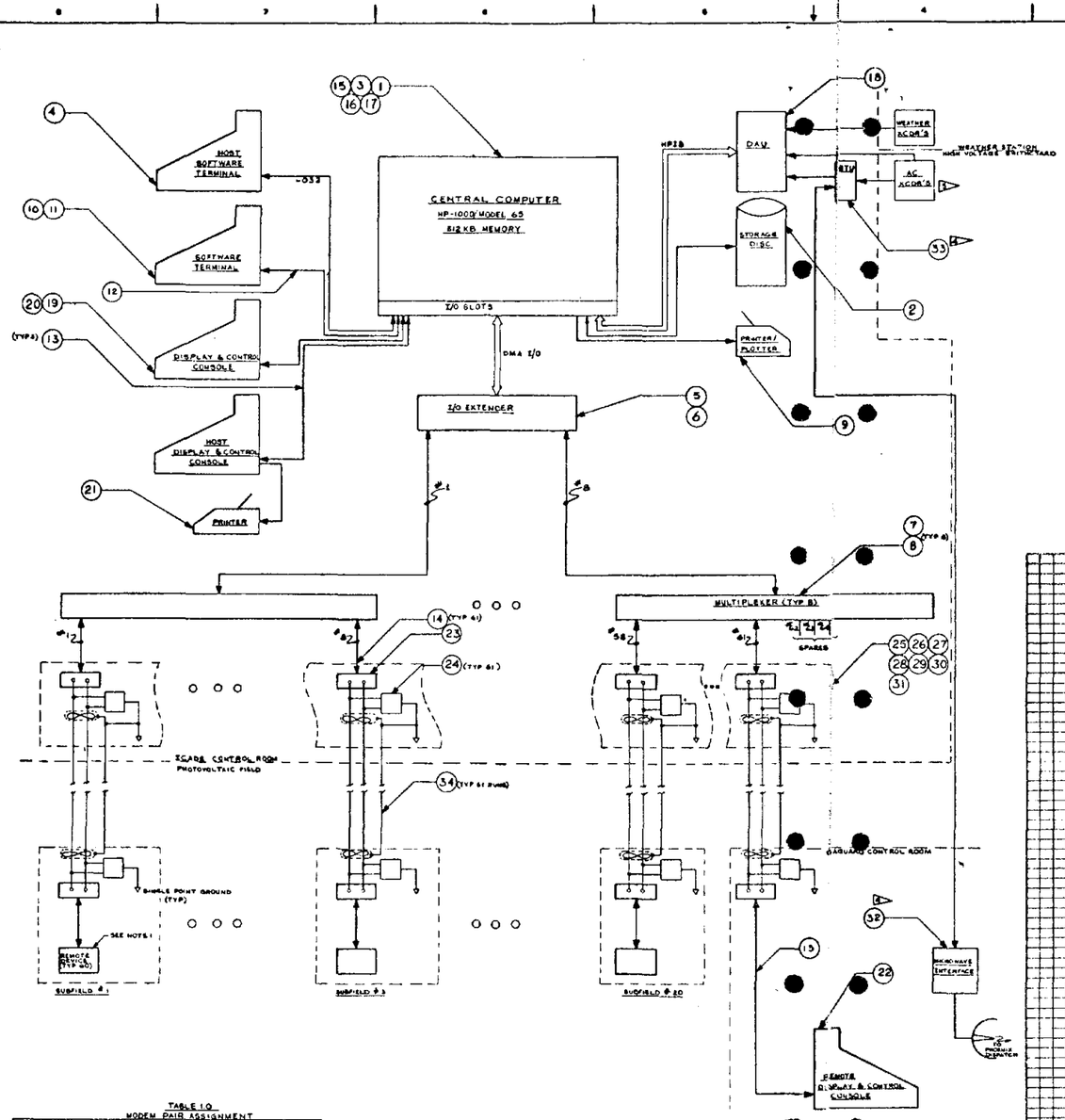


## NOTES:

1. THERE ARE 20 SUBFIELDS. FOR THE CONCENTRATOR FIELD THE REMOTE DEVICES PER SUBFIELD AREA(AFC 1, AFC 2 & THE PCU. IN THE CASE OF THE FLAT-PLATE ARRAY THERE IS 1 PCU PER SUBFIELD. SEE TABLE 1.0 BELOW.
2. ONE AFC CONTROLS 550 CONCENTRATOR ARRAYS DWG. 849PCPS1302 SHOWS AN AFC BLOCK DIAGRAM.
3. REFER TO DWG'S 849PCPS1328 & 849PCPS1228
4. THESE EQUIPMENT SHALL BE SUPPLIED AND INSTALLED BY THE PUBLIC UTILITY COMPANY
5. REFER TO THE FOLLOWING DWG'S : 849PCPS2001 & 849PCPS2026 FOR AC EQUIPMENT.

| REVISIONS | | | | |
|---|---|---|---|---|
| | | INITIAL RELEASE DC PC SK-149 | | |

TABLE 1.0
MODEM PAIR ASSIGNMENT

| REMOTE DEVICE | SUBFIELD LOCATION | MODEM INTERFACE # FLAT-PLATE -010 | MODEM INTERFACE # CONCENTRATOR -009 |
|---|---|---|---|
| AFC 1 | 1 THRU 20 | | 1,4,7,10,13,16,19,22, 25,28,31,34,37,40, 43,46,49,52,55 AND 58. |
| AFC 2 | 1 THRU 20 | | 2,5,8,11,14,17,20,23, 26,29,32,35,38, 41,44,47,50,53,56 AND 59. |
| PCU | 1 THRU 20 | 1 THRU 20 | 3,6,9,12,15,18,21,24, 27,30,33,36,39,42, 45,48,51,54,57 AND 60 |
| USG-RHC10 REMOTE DISPLAY | SAGUARO NEW CONTROL ROOM | 21 | |

| | | | | | | | |
|---|---|---|---|---|---|---|---|
| | | 849PCPS3026 | | ICADS FIELD INSTALLATION | | MMA | |
| AR | AR | 16 AWG 4 P | 34 | WIRE | | COMMERCIAL | |
| 1 | 1 | L & N 1401 | 33 | REMOTE CONTROL UNIT | | LEEDS & NORTHRUP | |
| 1 | 1 | (NOT AVAILABLE) | 32 | MICROWAVE I/F | | | |
| 1 | 2 | ESP7-004-2 | 31 | GET/PUT WAITING EVES. | | ZERO | |
| 1 | 2 | HD-385115 | 30 | FUSE HOLDER, 1 BAY | | | |
| | 3 | ZP-20237-41 | 29 | PLUG-IN STRIP, 12 OUTLETS | | | |
| 4 | 4 | ZP-20237-27 | 28 | PLUG-IN STRIP, 8 OUTLETS | | | |
| 1 | 2 | TD7-100 | 27 | FAN UNIT | | | |
| 1 | 1 | SV14-R15V2 | 26 | 60" x 26.06" x 30.56" RACK, RFI SHIELDED | | | |
| 1 | 1 | SV16-R15V2 | 25 | 77.5" x 26.06" x 30.56" RACK, RFI SHIELDED | | ZERO | |
| 42 | 42 | TS-1004 | 24 | LIGHTNING PROTECTION DEVICE 4 V CLAMP-TRANSITECTOR SYSTEMS | | | |
| 42 | 42 | 212-A | 23 | 300-1200 bps, FULL DUPLEX W/ CCITT RS-232C I/F | | UNIVERSAL DATA SYSTEMS | |
| 1 | 1 | USG-RHC10 | 22 | GRAPHICS CONSOLE, REMOTE | | US GRAPHICS (USG) | |
| 1 | 1 | USG-P100C | 21 | 200 CPS IMPACT PRINTER/PLOTTER | | | |
| 2 | 2 | USG-PHC10 | 20 | PLOTWARE MICROCODE I/F | | | |
| 2 | 2 | USG-RHC20 | 19 | GRAPHIC DEVELOPMENT CONSOLE, HOST W/OPTION-UCP11 | | USG | |
| 1 | 1 | HP-2497A | 18 | DATA ACQUISITION UNIT WITH OPTIONS -010, -040, -050 | | HP | |
| 1 | 1 | HP-92893A | 17 | SKELETON DEVICE DRIVER SOFTWARE | | | |
| 1 | 1 | HP-92847A | 16 | GRAPHICS 1000-II WITH OPTIONS-700(F-586,E3) & -022 | | | |
| 1 | 1 | HP-92831A | 15 | TOUCH TY WRITER W/ OPTIONS-700 & -022 | | | |
| 21 | 61 | HP-13062B | 14 | 25 RS-232-C CABLES | | | |
| 3 | 3 | HP-92215A | 13 | 50 RS-232-C CABLES | | | |
| 1 | 1 | HP-13222N | 12 | CABLE FOR TERMINAL | | | |
| 1 | 1 | HP-12966A | 11 | BUFFERED ASYNC I/F CARD | | | |
| 1 | 1 | HP-2623A | 10 | GRAPHICS TERMINAL | | | |
| 1 | 1 | HP-2608A | 9 | 400 CPS DOT MATRIX PRINTER GRAPHICS & OPTION-010 | | | |
| 3 | 8 | HP-12828A | 8 | 8 PORT RS-232C PANEL | | | |
| 3 | 8 | HP-12792A | 7 | 8-CHANNEL MUX | | | |
| 1 | 1 | HP-12898A | 6 | DMA FOR I/O EXTENDER | | | |
| 1 | 1 | HP-13179B | 5 | I/O EXTENDER, 6 SLOTS | | | |
| 1 | 1 | HP-2648A | 4 | GRAPHICS TERMINAL, OPTIONS -G7 & -022 | | | |
| 1 | 1 | HP-13785E | 3 | 512 KB HIGH SPEED MOS/RAM MEMORY | | | |
| 1 | 1 | HP-7912P | 2 | 65 MB DISC WITH TAPE BACKUP | | | |
| 1 | 1 | HP-2179A | 1 | MINI/DUS COMPUTER, OPTIONS -016 & -022 | | HP | |
| | | | | ICADS FOR FLAT-PLATE ARRAY | | MMA | |
| | | | | ICADS FOR CONCENTRATOR ARRAY | | MMA | |

| | | | |
|---|---|---|---|
| CPS | -010 | 849PCPS1000 | |
| CPS | -009 | 849PCPS1000 | |

A. SQUIRZALLO 0630 4-21-82

SANTA BARBARA CORPORATION

INSTRUMENTATION CONTROL AND DISPLAY SYSTEM (ICADS) BLOCK DIAGRAM

SIZE E CODE IDENT NO. 04236 849PCPS3002

SCALE NONE SHEET 1 OF 1

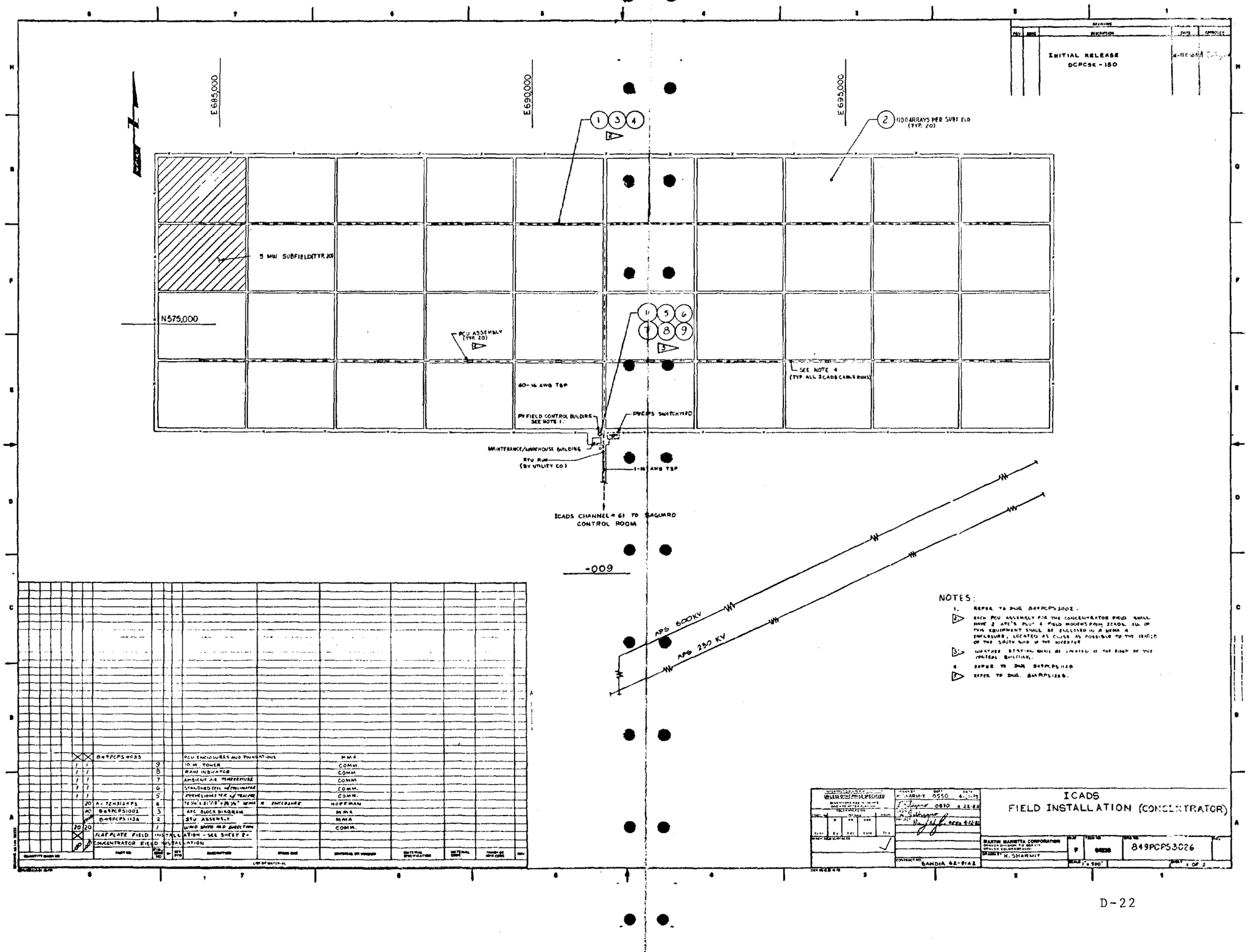
E 685,000
E 690,000
E 695,000
N575,000
5 MW SUBFIELD (TYP. 20)
100 ARRAYS PER SUBFIELD (TYP. 20)
PCU ASSEMBLY (TYP. 20)
SEE NOTE 4 (TYP ALL ICADS CABLE RUNS)
60-16 AWG TSP
PV FIELD CONTROL BUILDING SEE NOTE 1.
PVCPS SWITCHYARD
MAINTENANCE/WAREHOUSE BUILDING
RTU RUN (BY UTILITY CO.)
1-16 AWG TSP
ICADS CHANNEL # 61 TO SAGUARO CONTROL ROOM
APS 600KV
APS 230 KV
-009
INITIAL RELEASE DCPCSK-150
NOTES:
1. REFER TO DWG. 849PCPS3002.
2. EACH PCU ASSEMBLY FOR THE CONCENTRATOR FIELD SHALL HAVE 2 APC'S PLUS 2 FIELD MODEMS FROM ICADS. ALL OF THIS EQUIPMENT SHALL BE ENCLOSED IN A NEMA 4 ENCLOSURE, LOCATED AS CLOSE AS POSSIBLE TO THE CENTER OF THE SOUTH END OF THE INVERTER
3. WEATHER STATION SHALL BE LOCATED AT THE REAR OF THE MATERIAL BUILDING.
4. REFER TO DWG. 849PCPS1160
5. REFER TO DWG. 849PCPS1286.
849PCPS-0035 PCU ENCLOSURES AND FOUNDATIONS MMA
10 M TOWER COMM.
RAIN INDICATOR COMM
AMBIENT AIR TEMPERATURE COMM
STANDARD CELL W/COLLIMATOR COMM.
PYRHELIOMETER W/TRACKER COMM.
A-72H5124PS 72 1/4 x 21 1/8 x 26 1/4 NEMA 4 ENCLOSURE HOFFMAN
849PCPS1002 ARC BLOCK DIAGRAM MMA
849PCPS1126 STU ASSEMBLY MMA
WIND SPEED AND DIRECTION COMM.
FLAT PLATE FIELD INSTALLATION - SEE SHEET 2 -
CONCENTRATOR FIELD INSTALLATION
ICADS
FIELD INSTALLATION (CONCENTRATOR)
MARTIN MARIETTA CORPORATION
DRAWN BY K. SHARMIT
849PCPS3026
SANDIA 62-9142
SCALE 1" = 500'
SHEET 1 OF 2

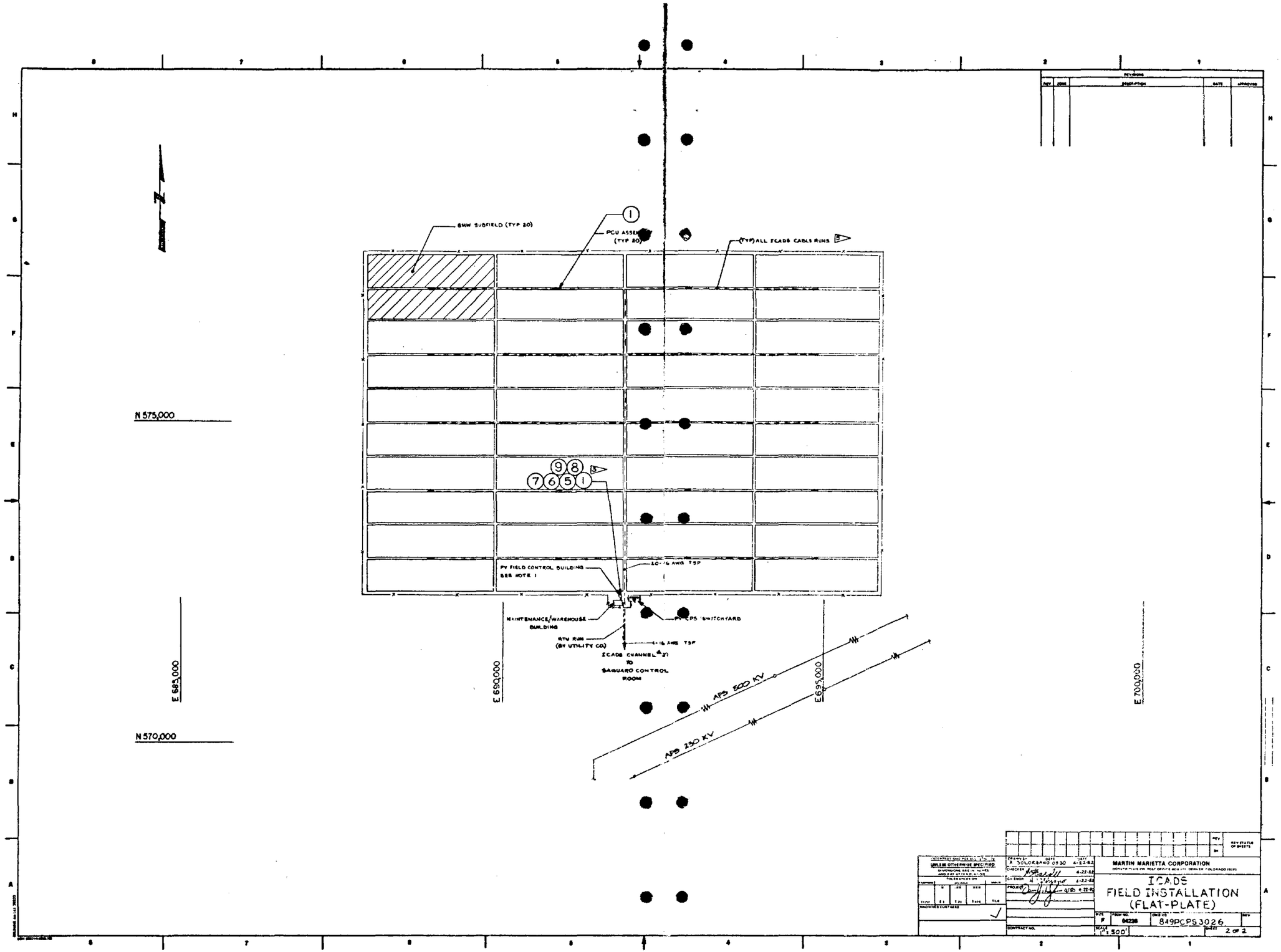
N
6MW SUBFIELD (TYP 20)
1
PCU ASSEM
(TYP 20)
(TYP) ALL ICADS CABLE RUNS
N 575,000
9 8
7 6 5 1
PV FIELD CONTROL BUILDING
SEE NOTE 1
10-16 AWG TSP
MAINTENANCE/WAREHOUSE
BUILDING
APS SWITCHYARD
RTU RUN
(BY UTILITY CO)
4-16 AWG TSP
ICADS CHANNEL #2
TO
SAGUARO CONTROL
ROOM
E 685,000
E 690,000
E 695,000
E 700,000
APS 500 KV
APS 230 KV
N 570,000
REVISIONS
REV
ZONE
DESCRIPTION
DATE
APPROVED
REV STATUS OF SHEETS
UNLESS OTHERWISE SPECIFIED
DIMENSIONS ARE IN INCHES
AND MAY BE ATTAINED
TOLERANCES ON
DRAWN
J. SOLORZANO 0330
CHECKED
ENGR
PROJ ENGR
MARTIN MARIETTA CORPORATION
DENVER DIVISION POST OFFICE BOX 179 DENVER COLORADO 80201
ICADS
FIELD INSTALLATION
(FLAT-PLATE)
CONTRACT NO.
SIZE
F
FSCM NO.
04236
DWG NO.
849PCPS3026
REV
SCALE
1" = 500'
SHEET
2 OF 2

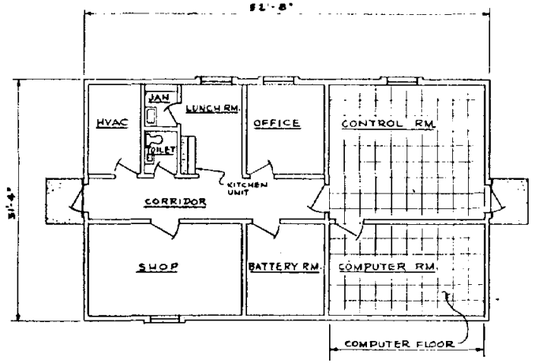


FLOOR PLAN
1/8" = 1'-0"

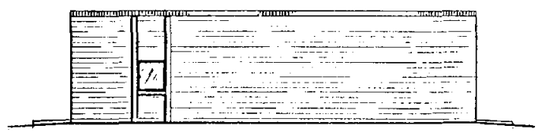

SOUTH ELEVATION
1/8" = 1'-0"

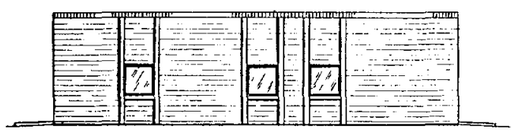

NORTH ELEVATION
1/8" = 1'-0"

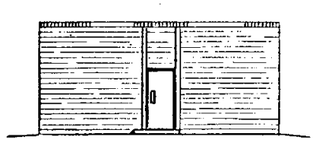

EAST ELEVATION
1/8" = 1'-0"

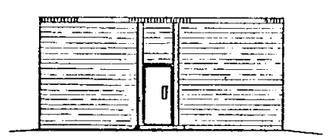

WEST ELEVATION
1/8" = 1'-0"

P.V. FIELD CONTROL BUILDING

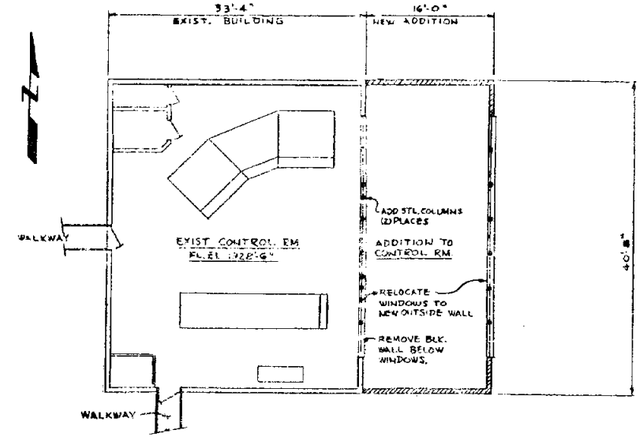


FLOOR PLAN
1/8" = 1'-0"

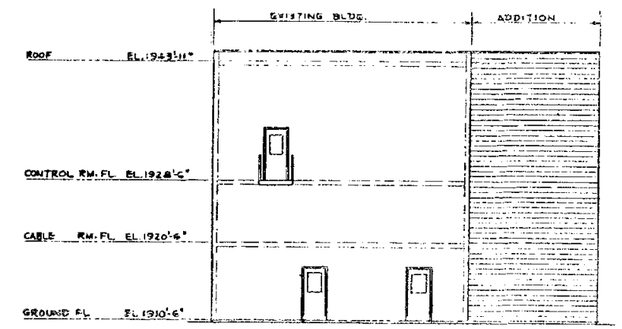


SOUTH ELEVATION
1/8" = 1'-0"

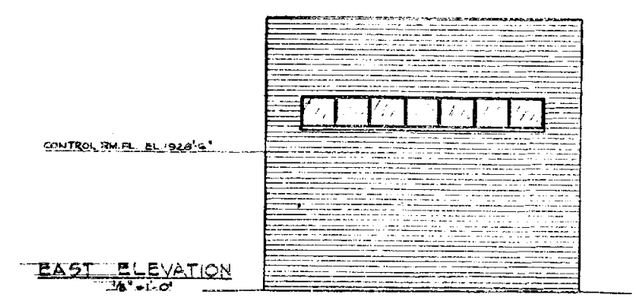


EAST ELEVATION
1/8" = 1'-0"

MAIN STATION CONTROL BUILDING ADDITION

| NO. | REVISIONS | DATE | BY | CHKD | APP'D | NO. | REFERENCE DRAWINGS |
|---|---|---|---|---|---|---|---|
| | | | | | | | |

PRINT RECORD: DATE / FOR / REVISED / CUSTOMER / FIELD / INTRA CO.

BRG. RECORD: DRAWN (DAF 3-24-82) / CHECKED / MECH. CK. / STRUCT. CK. / ELECT. CK. / PIPING CK. / INSTR. CK. / CIVIL CK.

DRAWING STATUS: ISSUED / DATE
PRELIMINARY
FOR COMMENTS AND/OR APPROVAL
APPROVED FOR CONSTRUCTION
REVISED & APPROVED FOR CONSTRUCTION — REV
NOT APPROVED FOR CONSTRUCTION UNLESS SIGNED & DATED. DESTROY ALL PRINTS BEARING EARLIER DATE &/OR REVISION NO.

849PCPS4031

CONTROL BUILDINGS

100 MW PHOTOVOLTAIC CENTRAL POWER STATION
SAGUARO POWER PLANT — RED ROCK, ARIZONA

SCALE — Stearns-Roger ENGINEERING CORPORATION — ORDER NO. C-25393

DWG. NO. 18K01-11 — SHEET NO. — REV.

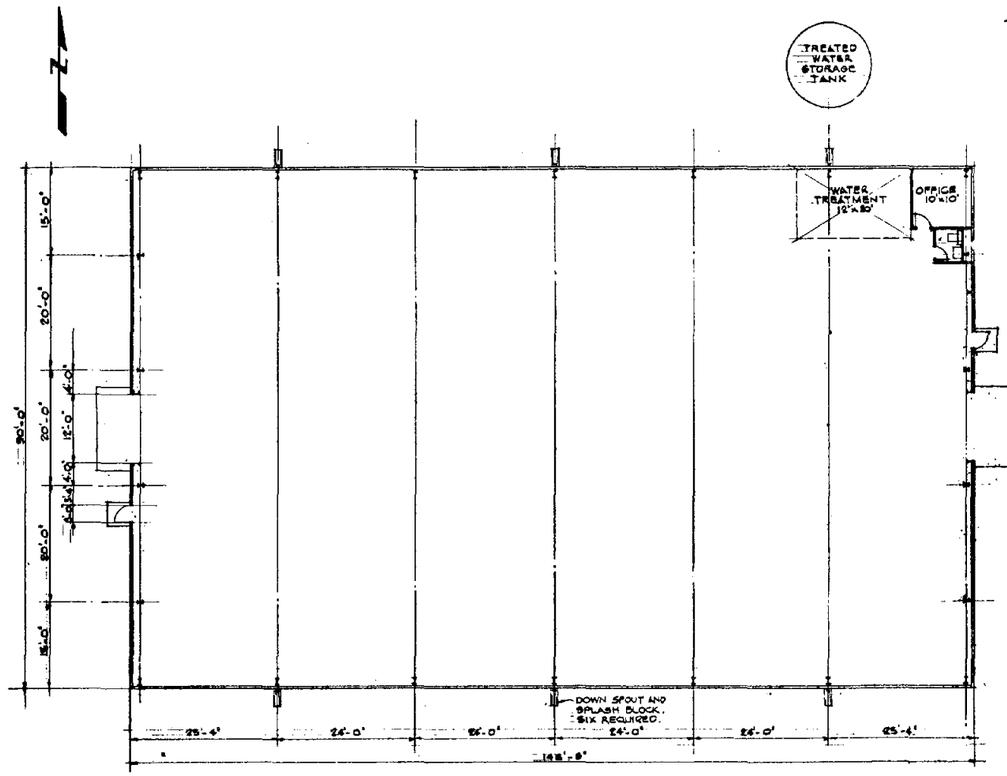


FLOOR PLAN
3/32" = 1'-0"

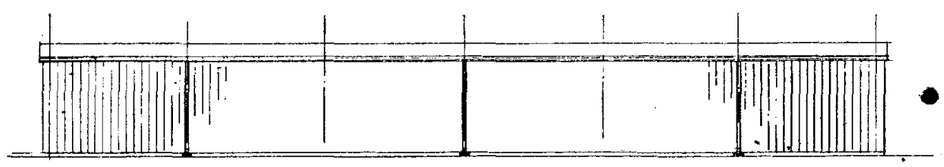

SIDE ELEVATION
3/32" = 1'-0"

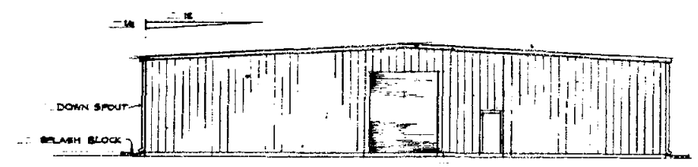


END ELEVATION
3/32" = 1'-0"

| NO. | REVISIONS | DATE | BY | CK'D | APP'D | NO. | REFERENCE DRAWINGS |
|---|---|---|---|---|---|---|---|

PRINT RECORD: DATE / FOR / REVISED / CUSTOMER / FIELD / INTRA. CO.

ENG. RECORD: DRAWN / CHECKED / MECH. OK. / STRUCT. OK. / ELECT. OK. / PIPING OK. / INSTR. OK. / CIVIL OK.

DRAWING STATUS: ISSUED / DATE
PRELIMINARY
FOR COMMENTS AND/OR APPROVAL
APPROVED FOR CONSTRUCTION
REVISED & APPROVED FOR CONSTRUCTION — REV.
NOT APPROVED FOR CONSTRUCTION UNLESS SIGNED & DATED. DESTROY ALL PRINTS BEARING EARLIER DATE &/OR REVISION NO.

849PCPS4032

MAINTENANCE/WAREHOUSE BUILDING

DWG. NO. 18K05-11

SHEET NO.

100MW PHOTOVOLTAIC CENTRAL POWER STATION
SAGUARO POWER PLANT — RED ROCK, ARIZONA

SCALE 3/32" = 1'

Stearns-Roger ENGINEERING CORPORATION

ORDER NO. C-25093

REV.

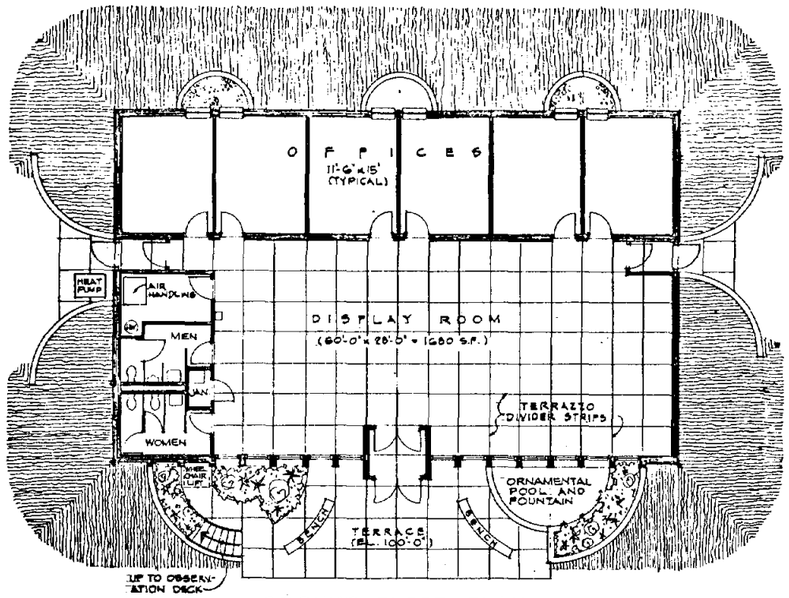


GROUND FLOOR PLAN
1/8" = 1'-0"

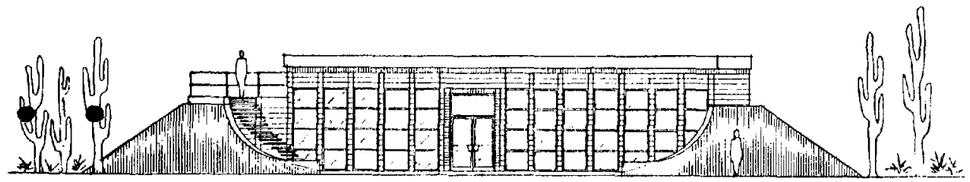

SOUTH ELEVATION
1/8" = 1'-0"

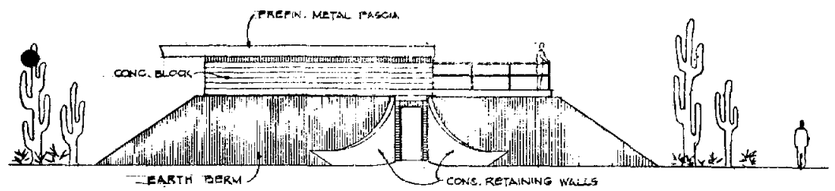


EAST ELEVATION
1/8" = 1'-0"

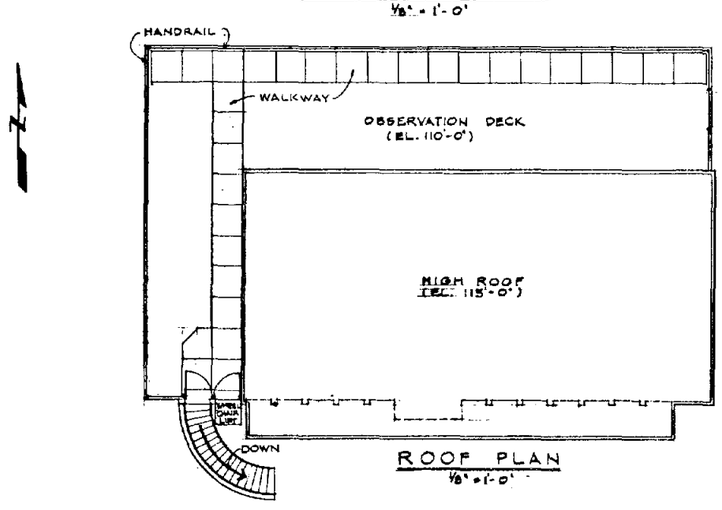


ROOF PLAN
1/8" = 1'-0"

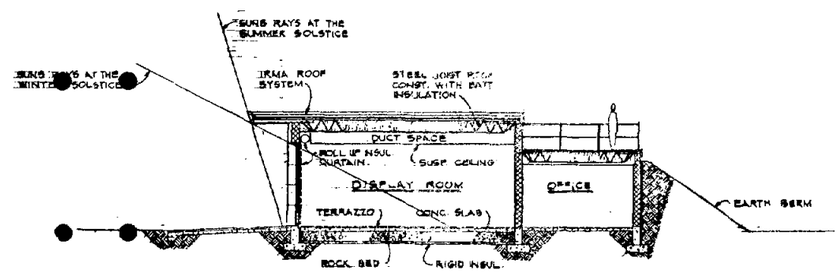


BUILDING SECTION
1/8" = 1'-0"

| NO. | REVISIONS | DATE | BY | DFD | APD | NO. |
|---|---|---|---|---|---|---|

REFERENCE DRAWINGS

PRINT RECORD: DATE / FOR / REVISED / CUSTOMER / FIELD / SWRA CO.

ENG. RECORD: DRAWN / CHECKED / MECH. OK / STRUCT. OK / ELECT. OK / PIPING OK / INSTR. OK / CIVIL OK

DRAWING STATUS: ISSUED / DATE — PRELIMINARY / FOR COMMENTS AND/OR APPROVAL / APPROVED FOR CONSTRUCTION / REVISED & APPROVED FOR CONSTRUCTION

NOT APPROVED FOR CONSTRUCTION UNLESS SIGNED & DATED. DESTROY ALL PRINTS BEARING EARLIER DATE & OR REVISION NO.

849PCPS4034

VISITORS CENTER

DWG. NO. 18K06-11

SHEET NO.

100MW PHOTOVOLTAIC CENTRAL POWER STATION
SAGUARO POWER PLANT — RED ROCK, ARIZONA

SCALE 1/8" = 1'

Stearns-Roger ENGINEERING CORPORATION

ORDER NO. C-25393

REV

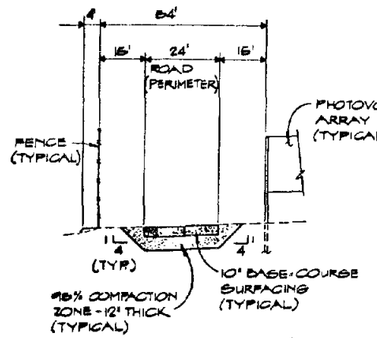


SECTION A

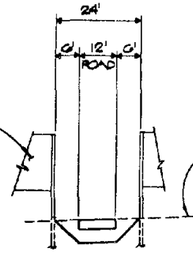


SECTION B

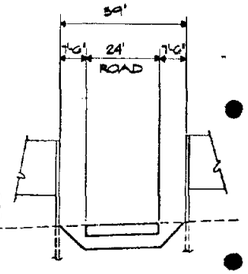


SECTION C

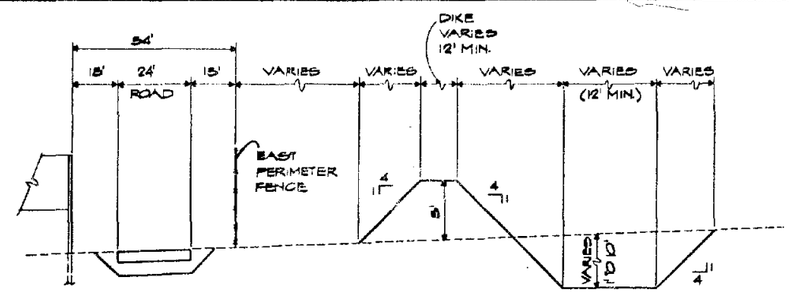


SECTION D

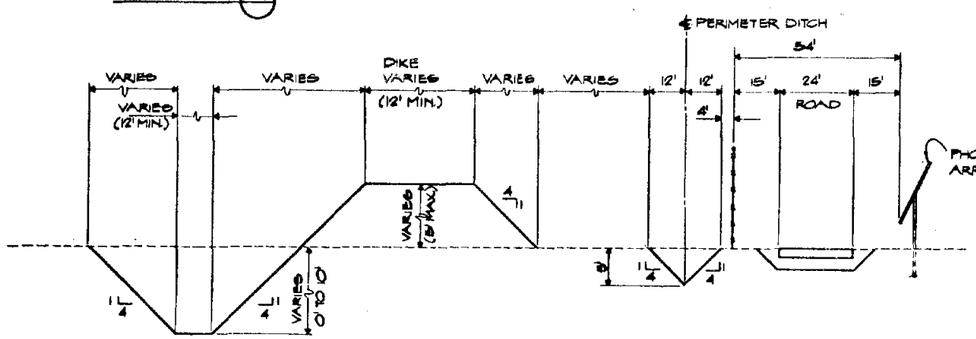


SECTION E

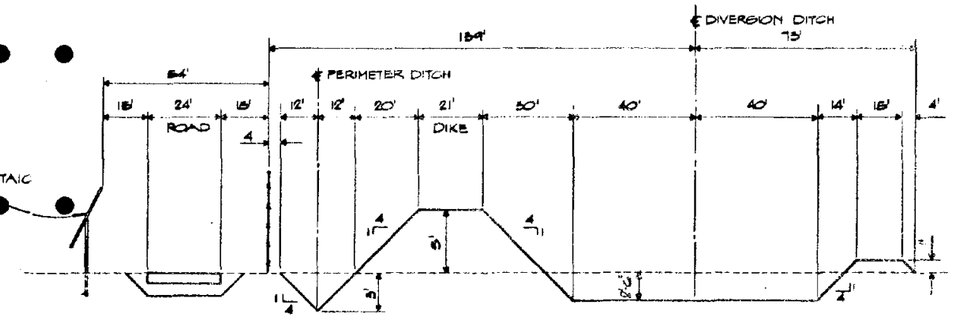


SECTION F

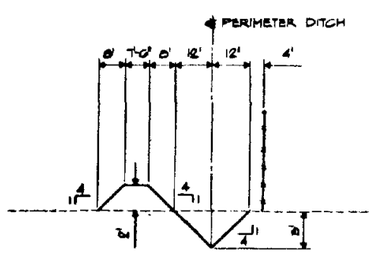


SECTION G

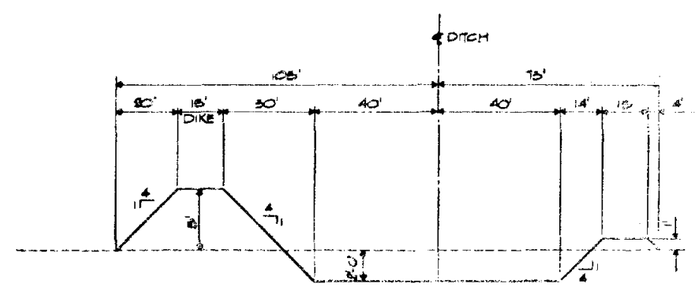


SECTION H

| NO | REVISIONS | DATE | BY | CK'D | APP'D | NO | REFERENCE DRAWINGS |
|---|---|---|---|---|---|---|---|

PRINT RECORD: DATE / FOR / REVISED / CUSTOMER / FIELD / INTRA CO

ENG. RECORD: DRAWN CL 1/4/80; CHECKED; MECH. CK; STRUCT. CK; ELECT. CK; PIPING CK; INSTR. CK; CIVIL CK

DRAWING STATUS: ISSUED / DATE; PRELIMINARY; FOR COMMENTS AND/OR APPROVAL; APPROVED FOR CONSTRUCTION; REVISED & APPROVED FOR CONSTRUCTION (REV); NOT APPROVED FOR CONSTRUCTION UNLESS SIGNED & DATED. DESTROY ALL PRINTS BEARING EARLIER DATE & OR REVISION NO.

849PCPS4041

GRADING SECTIONS

100MW PHOTOVOLTAIC CENTRAL POWER STATION
SAGUARO POWER PLANT — RED ROCK, ARIZONA

SCALE: HOR'L 1"=20' ; 1" = 5'

Stearns-Roger ENGINEERING CORPORATION

ORDER NO. C-25393

DWG. NO. 2K02-11

SHEET NO.

REV.

## APPENDIX E - MASTER PV CPS EQUIPMENT LIST

This Appendix provides a list of all major equipment contained in the PV CPS. Quantities of equipment are shown in units, feet, etc. A listing of anticipated spare parts and maintenance/repair contracts follows the master equipment list.

### MASTER PV CPS EQUIPMENT LIST

| | |
|---|---|
| 1000 | Photovoltaic Power System |
| 1100 | Solar Array |
| 1200 | Power Conditioning |
| 1300 | Power & Signal Distribution |
| 1400 | Array Field Control |
| 2000 | ac Electrical System |
| 2100 | 34.5KV Switchgear |
| 2200 | Transformers |
| 2300 | Protection & Control |
| 2400 | ac Cables |
| 3000 | ICADS |
| 3100 | Graphic Display CRT's |
| 3200 | Central Computer |
| 3300 | Saguaro Power Plant Dispatch Interface |
| 3400 | Data Storage |
| 3500 | Weather Station |
| 3600 | Field Cables |
| 4000 | PFAS |
| 4100 | Service Utilities |
| 4200 | Security and Access |
| 4300 | Structures and Enclosures |
| 4400 | O&M and Safety |

CPS MASTER EQUIPMENT LIST

| HBS | ITEM | QUANTITY |
|---|---|---|
| 1000 | Photovoltaic Power System | |
| 1100 | Solar Array | 810,000 |
| | Module Assembly | 810,000 |
| | Array Wiring #8 AWG, 1/c, 2KV | 4,374,000ft |
| | Mounting Structure | 45,000 |
| | Foundation | |
| | Pier 15.0' L x 18" Dia. | 46,800 |
| | w/2-5/8" Dia. Anchor Bolts | |
| | Ground Rods | 3,600 |
| 1200 | Power Conditioning | |
| | Inverter (5MW) | 20 |
| | Foundation 12'x17'x2'-6" | 20 |
| | PT's | 60 |
| | Foundation 3'x3'x1' | 20 |
| | w/1'x1'x1'-6" | |
| | Pedestal | |
| | CT's | 20 |
| | Foundation 3'x3'x1' | 20 |
| | w/1'x1'x1'-6" | |
| | Pedestal | |
| | PCU Power Transformer (2KV/480 V) | 20 |
| | Foundation 4'x4'x2'-6" | 20 |
| | 2/34.5 KV Step Up Transformer | 20 |
| | Foundation 22'x22'x6" | 20 |
| | w/8'x6'x2'-6" Center | |
| 1300 | Power & Signal Distribution | |
| | Weather Head Conduit, 2" Dia., 8' L | 8,100 |
| | 90° Elbow 2' Dia. | 8,100 |
| | dc Distribution Box | 440 |
| | Diodes-Siemens S21160 | 15,840 |
| | dc Interrupt Switch | 15,840 |
| | Foundation 7'x3'x1'-6" | 440 |
| | Lightning Arrestors, GE 2' Tranquel | 880 |
| | dc Cabling (Power) #8AWG, 21C, 2KV | 3,800,000ft |
| | #4/0 AWG, 3/C, 2KV | 130,000ft. |
| 1400 | Array Field Data Acquisition | |
| | Wind Speed | 20 |
| 2000 | ac Electrical System | |
| 2100 | Switchgear | |
| | 34.5 KV/ w/142' x 6' x 2'6" Foundation | 1 |
| | 34.5 KV Vertical Break Air | |
| | Switch w/3'6" 5Q Foundation | 1 |

CPS MASTER EQUIPMENT LIST

| HBS | ITEM | QUANTITY |
|---|---|---|
| | 34.5 KV Pwr. Ckt. Breaker w/4' x 7' x 2'-6" Foundation | 1 |
| | 115 KV CKT. Switcher | 1 |
| | 3 Phase, Fused Switch (150 A) | 21 |
| | Load Control/Motor Control Center LC/MCC | 1 |
| 2200 | Transformers | |
| | 115 KV/34.5 KV Main w/22' x 12' x 2'-6" Foundation & 40' x 26' Enclosure | 1 |
| | 34.5 KV/480V Auxillaries/LC/MCC w/20' x 6' x 2'-6" Foundation | 2 |
| | 34.5/4.16 KV Grounding w/5" x 5' x 2'-6" Foundation & 12' x 12' Spill Enclosure | 1 |
| | 115 KV Voltage Transformers | 3 |
| 2300 | Protection and Control | |
| | 115 KV Switchyard I/F (Bay 26) | |
| | 50 BF Relay | 1 |
| | 50/51 N Relay | 1 |
| | 50/51 Relay | 3 |
| | Ammeter, GE-AD40 | 3 |
| | Watt Transducer | 1 |
| | Var. Transducer | 1 |
| | Amp. Transducer | 1 |
| | KWh Transducer | 1 |
| | 34.5 KV/115 KV Switchyard | |
| | 51 V Relay | 2 |
| | 59 Relay | 1 |
| | Watt Transducer | 1 |
| | VAR Transducer | 3 |
| | kWh Transducer | 2 |
| | Amp Transducer | 1 |
| | 63 Relay | 1 |
| | 50BF Relay | 1 |
| | 87T Relay | 1 |
| | 86 Relay | 1 |
| | 50/51N Relay | 1 |
| | 51 Relay | 1 |
| | 51N Relay | 1 |
| | LC/MCC | |
| | KW Transducer | 2 |
| | Wh Transducer | 1 |
| | PT's | 2 |
| | Fuses (25 A) | 2 |
| | Circuit Breakers (1600 A) | 2 |
| | Fuses (1800 A) | 2 |
| | Three Phase Switches | 2 |
| | CT's | 2 |

CPS MASTER EQUIPMENT LIST

| HBS | ITEM | QUANTITY |
|---|---|---|
| 2400 | ac Cables | |
| | ac Cabling (Power 34.5 KV) | |
| | 3/C # 1/0 AWG | 2,000,000ft |
| | ]]5 kV Transmission Line | 10,560 ft |
| 3000 | ICADS | |
| 3100 | Graphic Display CRT's | |
| | Host Console RHC20-USG | 2 |
| | Printer/Plotter Option UCP11-USG | 2 |
| | Plotware Microcode I/F PHC10-USG | 2 |
| | 200 CPS Printer/Plotter | 1 |
| | Remote Console RHC10-USG | 1 |
| | 50' Cables HP-92218A, RS-232C | 3 |
| 3200 | Central Computer | |
| | Graphics Terminal (Black & White, 512 x 390) | |
| | Graphics Terminal, HP-2623A | 1 |
| | Cable, HP-13222N | 1 |
| | Buffered Async I/E Card, HP-12966A | 1 |
| | Line Printer (400 lpm w/Graphics | |
| | 400 lpm Dot Matrix Printer, HP2608A | 1 |
| | Printer I/F, -210 | 1 |
| | Modems (ICADS/Field) - UDS 212-A | |
| | 212-A Modems w/RS-232C Interface | 42 |
| | Lightning Protection Device TS-P9001 | 42 |
| | Modems/DAU Rack | |
| | 77.5" x 26.06" x 30.56" Rack, Zero-SV16-R15V2 | 1 |
| | Fan Unit, Zero-TD7HOR | 1 |
| | Outlets, Zero-AP20237027 | 4 |
| | Dolly, Flush, (1) Bay, Zero-MD-315H5 | 1 |
| | Set of (4) Lifting Eyes, Zero-ZSP7-004-2 | 1 |
| | Modems Cables (Between Mux Panels & Modems) | |
| | 25 Ft. Cable, HP-30062B | 21 |

CPS MASTER EQUIPMENT LIST

| HBS | ITEM | QUANTITY |
|---|---|---|
| | Software (FORTRAN 77 & Graphics) | |
| | FORTRAN 77 | |
| | FORTRAN 77 Compiler, HP92836A | 1 |
| | For F-Series CPU, -700 | 1 |
| | Software on 7912 Disc, -022 | 1 |
| | Graphics | |
| | Graphic 1000-II, HP92841A | 1 |
| | For F-Series, -700 | 1 |
| | Software on 7912, -022 | 1 |
| | Skeleton Device, Driver Source, HP-92843X | 1 |
| | I/O Expander | |
| | I/O Extender Adds 16 Slots, HP-12979B | 1 |
| | DMA For I/O Extender, HP12898A | 1 |
| | Host Computer | |
| | HP1000/65, HP2179A | 1 |
| | Delete 256KB, -014 | 1 |
| | Software on 7912, -022 | 1 |
| | System Console | |
| | Graphics Terminal, HP-2648A | 1 |
| | Minicartridge I/O, -007 | 1 |
| | Extended ASYNC, -032 | 1 |
| | Memory | |
| | 512Kb H.S., HP-12788E | 1 |
| | Serial Multiplexers | |
| | 8 Channel Mux, HP12792A | 3 |
| | 8-Port RS-232 Panel, HP12828A | 3 |
| 3300 | Saguaro Power Plant Dispatch Interface | 1 |
| | Signal Conditioner | 1 |
| 3400 | Data Acquisition Unit | |
| | DAU/Control HP3497A | 1 |
| | Clock Format, -230 | 1 |
| | Power 120 Vac/60HZ, -326 | 1 |
| | DVM , 5 1/2 Digit, -001 | 1 |
| | 20 Channel Relay MX, -010 | 1 |
| | 16 Channel Digital Interrupt, -050 | 2 |
| | 100 KHZ Reciprocal Counter, -060 | 2 |
| | Rack Flange Kit, -908 | 1 |
| 3500 | Data Storage | |
| | Disc Drive HP7912P 65 MB with Tape Backup | 1 |

CPS MASTER EQUIPMENT LIST

| HBS | ITEM | QUANTITY |
|---|---|---|
| 3600 | Weather Station | |
| | Pyheliometer w/Tracker | 1 |
| | Secondary Standard Reference Cell | 1 |
| | Ambient Air Temperature | 1 |
| | Rain Indicator | 1 |
| | Tower (10 Meter) | 1 |
| 3700 | Field Cabling | |
| | 600 Volt Armored Field Instrumentation Cable | |
| | 1 - TSP #16 AWG | 2,000ft |
| | 3/C #12 AWG, shielded | 3,000ft |
| | 4/C #10 AWG, shielded | 2,000ft |
| | 2/C #12 AWG, shielded | 5,000ft |
| | 2/C #10 AWG, shielded | 2,000ft |
| | 600 Volt Instrumentation Cable | |
| | 3/C #12 AWG, shielded | 1,000ft |
| | 4/C #10 AWG, shielded | 1,000ft |
| | 2/C #12 AWG, shielded | 2,000ft |
| | 2/C #10 AWG, shielded | 1,000ft |
| | ICADS Field Cables for Modems (21 pairs) | |
| | 1 - TPS #16 AWG, armored | 122,000ft |
| 4000 | PFAS | |
| 4100 | Service Utilities, Water | |
| | Water Supplies/Plumbing, Array Washing | |
| | Water Supply | |
| | Tank-18'H x 27' Dia. | 1/75,000 gal |
| | Tank Foundation | 1/3'6"x28'Dia |
| | Wash System | |
| | Tank | 7 |
| | Washing Unit | 7 |
| | Septic System | |
| | Septic Tank-8'-5" x 5'-5" x 5'-10" | 413.33ft$^3$ |
| | Seepage Field-10' x 22' | 220 ft |
| | UPS Systems | |
| | 20 KVA UPS, Emerson Elec.-AP-02-SMS | 1 |
| | Lead Calcium Cells, C&D-KCW-15 | 60 |

CPS MASTER EQUIPMENT LIST

| HBS | ITEM | QUANTITY |
|---|---|---|
| | Battery Cell Interconnects, C&D | 60 |
| | Battery Rack, C&D - RD-801-13 | 1 |
| 4200 | Security & Access | |
| | Plant | |
| | Fences - 6' High 3-Strand Barb-Wire | 5.10 miles |
| | Gates - 6' High Chain Link | 1 |
| | Roads | |
| | Subfield Roads | 15.81 miles |
| | Field Roads | 6.12 miles |
| | Access Roads | 1.84 miles |
| | 34.5/115 KV Switchyard | |
| | Fences 180' x 100' x 8' H Chain Link | 1 |
| | Gates | |
| | Large | 1 |
| | Small | 1 |
| | Flood Lights | |
| | 250 High Pressure Sodium Lamp | 4 |
| | 30' Light Pole | 4 |
| | Inverter (5 MW) | |
| | Flood Lights | |
| | 250 High Pressure Sodium Lamp | 20 |
| | 30' Light Pole | 20 |
| | Field Control Building | |
| | Flood Lights | |
| | 100 High Pressure Sodium Lamp | 2 |
| | 30' Light Pole | 2 |
| | O&M Shop | |
| | Flood Lights | |
| | 100 High Pressure Sodium Lamp | 4 |
| | 30' Light Pole | 4 |
| 4300 | Structures and Enclosures | |
| | Control Building | |
| | Field Control Building | 1,644 $ft^2$ |
| | Main Station Control Room Addition | 300 $ft^2$ |

CPS MASTER EQUIPMENT LIST

| HBS | ITEM | QUANTITY |
|---|---|---|
| | Visitors Center | 2,715 $ft^2$ |
| | Offices | 1,035 $ft^2$ |
| | Display Rooms | 1,680 $ft^2$ |
| | O&M Shop | |
| | Maintenance/ Warehouse Building | 13,200.3$ft^2$ |
| 4400 | O&M and Safety | |
| | O&M Warehouse Equipment | |
| | Transportation, 3/4 Ton Vans | 1 |
| | 5 Ton Stake Bed Trucks | 7 |
| | Office Equipment, Furnishings | 1 |
| | Support Tube Slings(50') | 20 |
| | Test Equipment | |
| | Scope | 2 |
| | DVM | 10 |
| | I-V Testers | 1 |
| | Tool Kits | |
| | Electrical Kit | 5 |
| | Mechanical Kit | 5 |
| | Drill Press | 1 |
| | Welder | 1 |
| | Air Tools | 1 lot |
| | Forklift | 1 |
| | Compressor | 1 |
| | Safety | |
| | First Aid Kit | 24 |
| | Eye Wash | 3 |
| | Emergency Shower | 3 |
| | Fire Protection | |
| | Automatic Total Flooding Halon 1301 System Control Room. | 1 |
| | Detection Systems-For Alarm Only w/Local Control Panel. | |
| | Warehouse | 15 |
| | Visitor Center HVAC Room | 2 |
| | Multizone Central Fire Protection. | 1 |
| | Portable Fire Extinguishers. | |
| | Inverter/Transformer Units - 15 $CO_2$ | 40 |
| | Plant Area Switchgear/ Transformer. | |
| | 50 lb. Wheeled Dry Chemical | 1 |

CPS MASTER EQUIPMENT LIST

| HBS | ITEM | QUANTITY |
|---|---|---|
| | Control Building, 9 lb. Halon 1211. | 3 |
| | Warehouse, 20 lb. Multi-purpose Dry Chemical. | 4 |
| | Visitor Center | |
| | HVAC Room, 20 lb. Multipurpose. | 1 |
| | Other Areas, 10 lb. Multipurpose. | 2 |

CPS MAINTENANCE REPAIR CONTRACTS

| # | Item | Contract |
|---|---|---|
| 1 | Line Printer | HP |
| 2 | Fortran 77, Computer, HP 92836A | HP |
| 3 | I/O Expander, HP 12979A | HP |
| 4 | DMA For I/O Extender HP 12898A | HP |
| 5 | Processor HP 1000/65, HP 2179A | HP |
| 6 | Graphic Terminal, HP2648A | HP |
| 7 | Memory 512K6HS, HP 12788E | HP |
| 8 | Serial Multiplexers | HP |
| | 8 Channel Multiplexers | |
| | 8 Port, RS-232 Panel, HP 12828A | |
| 9 | Signal Conditioner | |
| | Data Acquisition Unit | HP |
| | DAU/Control HP 3497A | |
| | Clock Format - 230 | |
| | Power 120 Vac/60 HZ - 326 | |
| | DVM - 001 | |
| | Analog Channels - 010 | |
| | Disc Channels - 050 | |
| | Counter Card - 060 | |
| 10 | Disc Drive HP 7911P | HP |
| 11 | Graphic Display CRT's | USG |
| 12 | Display RHC20 | USG |
| 13 | Display RHC10 | USG |
| 14 | Printer/Plotter | USG |

## APPENDIX F - SUBFIELD PERFORMANCE SIMULATION

A PV CPS subfield annual performance estimated has been made based upon prototype module test parameters, SOLMET-TMY, (Phoenix) global insolation and ambient temperature data and assumed interter/PCU performance characteristics. Field dc losses were asumed to be a fixed percentage of dc bus power. The simulation predicts ac subfield power output and dc bus voltage each daylight hour using a FORTRAN model and subject to the assumptions of Table F-2.

Attachment F-1 shows typical results of annual simulation for June 21. The annual plant performance estimate is shown in Table F-1 below.

Table F-1 Annual Plant Performance Estimate

| | |
|---|---|
| Annual Average, Hourly Global Insolation | 494.2 $W/m^2$ |
| Subfield Annual Energy Output | 12.35 GWh |
| Plant Annual Energy Output (IHV BVS) | 247.0 GWh |

Table F-2 - Assumptions for Performance Simulations

Module: Data from Westinghouse indicated

$$\frac{\Delta V}{\Delta T} = -0.119\ V/^{o}C \qquad \frac{\Delta I}{\Delta T} = 4.9 \times 10^{-4}\ A/^{o}C$$

dc power collection efficiency = 0.9806 (fixed)

PCU Efficiencies:

| Inverter: | dc input % of full load | Efficiency |
|---|---|---|
| | 0 to 5% | 0 |
| | 5 to 10% | 1.6214* (dc input) - 0.0801 |
| | 10 to 25% | 0.2470* (dc input) + 0.632 |
| | 25 to 100% | 0.0033* (dc input) + 0.9477 |
| | 100% | Constant 5 MW output |

Transformer: 0.99 (fixed)

Results of Subfield Performance Simulation

June 21, 1987

DAY 172

| INSOLATION W/M2 | AMB TEMP DEG C | PWR OUT MW AC | DC BUS VOLT VDC |
|---|---|---|---|
| 39.66 | 20.60 | .12 | 2245.30 |
| 154.32 | 21.70 | 1.03 | 2191.28 |
| 356.34 | 24.40 | 2.37 | 2087.03 |
| 570.76 | 27.20 | 3.62 | 1977.16 |
| 743.89 | 29.40 | 4.53 | 1889.17 |
| 859.48 | 32.20 | 4.95 | 1814.59 |
| 921.45 | 33.90 | 4.95 | 1772.23 |
| 913.67 | 35.00 | 4.95 | 1761.92 |
| 849.65 | 36.10 | 4.86 | 1771.68 |
| 721.51 | 36.10 | 4.22 | 1817.43 |
| 546.70 | 36.10 | 3.30 | 1879.84 |
| 340.98 | 36.70 | 2.12 | 1946.14 |
| 151.55 | 36.70 | .90 | 2013.77 |
| 39.53 | 36.10 | .10 | 2060.90 |

Attachment F-1

REPORTS DISTRIBUTION

DISTRIBUTION:

TID-4500-R66, UC-63a (551)

Department of Energy (15)
Division of Photovoltaic Energy Systems
Attn: R. Annan
M. B. Prince
A. Krantz
Forrestal Bldg.
1000 Independence Ave. SW
Washington, DC 20546

Department of Energy
Division of Passive and Hybrid
Attn: Michael D. Maybaum, Director
Office of Solar Applications
Washington, DC 20585

Jet Propulsion Laboratory (6)
Attn: R. V. Powell
E. S. Davis
R. Ferber
K. Volkmer
W. Callaghan
R. Ross
4800 Oak Grove Drive
Pasadena, CA 91103

Jet Propulsion Laboratory
Solar Data Center
MS 502-414
4800 Oak Grove Drive
Pasadena, CA 91103

MIT-Energy Laboratory
Attn: E. Kern
E40.172
Cambridge, MA 02139

Solar Energy Research Institute
Attn: D. Feucht
1536 Cole Boulevard
Golden, CO 80401

SERI, Library (2)
1536 Cole Boulevard, Bldg. #4
Golden, CO 80401

Florida Solar Energy Center
Attn: H. Healey
300 State Road 401
Cape Canaveral, FL 32920

EPRI (2)
Attn: Edgar Demeo
Roger Taylor
P. O. Box 10412
Palo Alto, CA 94303

House Science and Technology Committee
Attn: Don Teague
Room 374-B
Rayburn Building
Washington, DC 20515

Tennessee Valley Authority
Attn: J. McKibben
715 Market Street
Room 320
Chatanooga, TN 37401

Department of Energy
Technologies Division
Attn: Dean C. Graves
Albuquerque, NM 87115

AF Energy Liaison Office
DOE/Albuquerque Operations Ofc.
Albuquerque, NM 87115

AFWAL/POOC
Attn: Jack Geis
Wright Patterson AFB
Dayton, OH 45433

Argonne National Lab
Attn: Wayne Lark
9700 S. Cass Avenue
Argonne, IL 60439

Bonneville Power Administration
Attn: Craig Mortinson
P. O. Box 3621
Portland, OR 97208

Brookhaven National Labs
Attn: John Andrews
National Center for Analysis
of Energy System
Upton, NY 11973

Department of Energy
Dep. Asst. Sec. for Solar Energy
Attn: R. San Martin
1000 Independence Ave., SW, Rm 6C026
Washington, DC 20585

DROME-EA
USAMERADCOM
Robert Williams
Fort Belvoir, VA 22060

NASA/LeRC (2)
Attn: W. Brainard
Tom Klucher
21000 Brookpark Rod
Cleveland, OH 44135

Oak Ridge National Lab
Attn: Stephen Kaplan
P. O. Box X
Oak Ridge, TN 37830

USDA Forest Service
Attn: John Hayes
517 Gold SW
Albuquerque, NM 87102

Wind Systems Program
Attn: Art Eldridge
Rocky Flats Plant
P. O. Box 464
Golden, CO 80401

A. T. Kearney, Inc.
Attn: J. W. Egan
699 Prince St.
P. O. Box 1405
Alexandria, VA 22313

Abacus Controls, Inc.
Attn: G. A. O'Sullivan
P. O. Box 893
Somerville, NJ 08876

Acurex (2)
Attn: M. Wool
R. Spencer
485 Clyde Ave.
Mountainview, CA 94042

ADTECH
Attn: W. H. Warren
Energy & Env. System Cntr.
7923 Jones Branch Dr.
McLean, VA 22102

Aerospace Corporation
Attn: S. Leonard
P. O. Box 92957
Los Angeles, CA 90009

AIA Research Corporation
Attn: George Royal
1735 New York Ave. NW
Washington, DC 20006

Alabama Power Co.
Attn: Rob Crisler
P. O. Box 2641
Birmingham, AL 35291

Allied Chemical
Attn: W. K. Stemple
P. O. Box 1021R
Morristown, NJ 07960

American Power Conversion Corp.
Attn: E. E. Landsman
89 Cambridge Street
Burlington, MA 01803

Applied Solar Energy Corporation
Attn: K. Ling
P. O. Box 1212
City of Industry, CA 91745

Architects Collaborative
46 Brattle Street
Cambridge, MA 02138

Arco Solar, Inc.
Attn: J. Arnett
P. O. Box 4400
Woodland Hills, CA 91365

Arizona Public Service Co.
Attn: Tom Lepley
P. O. Box 21666
Station 5629
Phoenix, AZ 85036

Arizona Public Service Co.
Attn: J. McGuirk
411 North Central Ave.
Phoenix, AZ 85036

Arizona State University
Attn: C. E. Backus
College of Engineering
Tempe, AZ 85281

Arthur D. Little, Inc.
Attn: W. Peter Teagan
Acorn Park
Cambridge, MA 02140

Atlantic Research Corp.
5390 Cherokee Ave.
Alexandria, VA 22314

Avco Everett Research Lab., Inc.
Attn: A. F. Byrnes
2385 Revere Beach Parkway
Everette, MA 02149

BDM Corporation
Attn: W. Kauffman
1801 Randolph Rd. SE
Albuquerque, NM 87106

BDM Corporation
Attn: George Rhodes
2600 Yale Blvd. SE
Albuquerque, NM 87106

Babcock & Wilcox
Attn: R. L. Williams
Contract Research Div.
P. O. Box 1260
Lynchburg, VA 24505

Battelle
Attn: Ray Watts
P. O. Box 999
Richland, WA 99352

Battelle Columbus Laboratories (2)
Attn: D. Carmichael
G. Noel
505 King Avenue
Columbus, OH 43201

Bechtel Group Inc.
Attn: W. Stolte
P. O. Box 3965
San Francisco, CA 94119

Bendix Corporation
Attn: E. J. McGlinn
Bendix Center
Executive Offices
Southfield, MI 48076

Black & Veatch
Attn: S. Levy
P. O. Box 8405
Kansas City, MO 64114

Boeing Engineering & Construction
Attn: R. Gillette
P. O. Box 3707
Seattle, WA 98124

Booz, Allen, and Hamilton, Inc.
Attn: C. Claiborne
8801 E. Pleasant Valley Rd.
Cleveland, OH 44131

Booz, Allen, and Hamilton, Inc.
Attn: Jerry Rosenberg
317 1st NW
Washington, DC 20001

Boston Edison Company
Attn: Michael Mulcahy
800 Boylston Street
Boston, MA 02199

Burt Hill Kosar Rittelmann
Attn: John Oster
400 Morgan Center
Butler, PA 16001

California Energy Commission
Attn: Art Soinski
1516 9th Street
Sacramento, CA 95814

Chevron Research Company
Attn: R. M. Moore
P. O. Box 1627
Richmond, CA 94802

Chronar Corporation
Attn: G. Self
P. O. Box 177
Princeton, NJ 08540

Clemson University
Attn: Jay W. Lathrop
Electrical Engineering Dept.
Clemson, SC 29631

Coast Guard R&D Center
Attn: S. Trenchard
Avery Point
Groton, CT 06340

Commission of European Communities
Attn: G. Grassi
200 Rue De La Loi
1040 Brussels
BELGIUM

Dayton Power & Light Company
Attn: S. K. Arentsen
P. O. Box 1247
Courthouse Plaza
Dayton, OH 45401

Dayton T. Brown, Inc.
Attn: Vincent Loscalzo
Church Street
Bohemia, NY 11716

Dept. of Water and Power
City of Los Angeles
Attn: Chief Engineer
P. O. Box 111
Los Angeles, CA 90051

DSET Labs Inc.
Attn: G. Zerlaut
P. O. Box 186
Black Canyon Stage
Phoenix, AZ 86020

Detroit Edison Co.
Attn: George Murray, U.T.S.
2000 2nd Ave.
Rm. 2134 WCB
Detroit, MI 48226

Dubin-Bloome Associates
Attn: K. Raman
312 Park Road
West Hartford, CT 06107

Duquesne Light Co.
Attn: Joe Koepfinger
Mail Drop 20-1
301 Grant Street
One Oxford Centre
Pittsburgh, PA 15279

Entech, Inc.
Attn: Mark O'Neill
1015 Royal Lane
P. O. Box 612246
DFW Airport, TX 75261

E. I. DuPont Co.
Attn: E. Young
6004 DuPont Bldg.
Wilmington, DE 19898

Ebasco SVCS., Inc.
Attn: J. D. Norris
Two Rector St.
New York, NY 10006

Ehrenkrantz Group
Attn: Stephen Weinstein
19 West 44th Street
New York, NY 10036

Energy Associates
Attn: Walt Adams
5109 Royene NE
Albuquerque, NM 87110

Exxon Enterprises
Attn: Virginia Sulzberger
1251 Avenue of the Americas
New York, NY 10020

Exxon Research Engr. Co.
Attn: John P. Dismukes
P. O. Box 45
Linden, NJ 07036

Florida Power and Light
Attn: R. Allen
P. O. Box 529100
Miami, FL 33152

Florida Power and Light Co.
Attn: Gary Michel, General
Engineer Dept.
P. O. Box 529100
Miami, FL 33152

Florida Power Corp.
Attn: Larry Rodriguez
3201 34th Street South
St. Petersburg, FL 33711

Frederick A. Costello, Inc.
Attn: F. Costello
12864 Tewksbury Dr.
Herndon, VA 22071

General Electric Company (2)
Attn: J. M. Marler
E. Mehalick
Advanced Energy Programs Department
P. O. Box 527
King of Prussia, PA 19406

General Electric Energy Sys. Pro. Dept.
Attn: J. A. Garate
1 River Road, Bldg. 6
Schenectady, NY 12345

Georgia Institute of Technology
Attn: L.Banta
Technology Applications Laboratory
Eng. Exp. Station
Atlanta, GA 30332

Georgia Power Company
Attn: G. Birdwell
P. O. Box 4545
Atlanta, GA 30302

German Aerospace Research Establishment
Attn: Dr.C. Voigt
Advanced Programs Division
Pfaffenwaldring 38-40
D-7000 Stuttgart 80
WEST GERMANY

Gould Inc.
Attn: Hans Birch
40 Gould Center
Rolling Meadows, IL 60008

Hawaiian Electric Co., Inc.
Attn: R. E. Bell
P. O. Box 2750
Honolulu, HI 96840

Henry Thomas
Lee County Elec. Coop.
Ft. Myers, FL

Hittman Associates, Inc.
Attn: L. D. Carter
9190 Red Branch Road
Columbia, MD 21045

Holmes and Narver, Inc.
Attn: W. C. Gekler
999 Town and Country Road
Orange, CA 92668

Honeywell
Attn: E. G. Zoerb
1700 W. Highway 36
Roseville, MN 55113

Houston Lighting and Power Co.
Attn: W. M. Menger, Chief
Facility Engineer
P. O. Box 1700
Houston, TX 77001

Hughes Aircraft Company
Attn: G. Naff
Bldg. A1 MS 4C843
P. O. Box 9399
Long Beach, CA 90810-0399

Intersol Power Corporation
Attn: J. Sanders
11901 W. Cedar Ave.
Lakewood, CO 80228

Jacksonville Electric Authority
Attn: George Rizk
233 West Duval Street
Jacksonville, FL 32202

JBF Scientific Corporation
Attn: P. F. DeDuck, Jr.
2 Jewel Drive
Wilmington, MA 01887

JSR Associates
Attn: John Reuyl
2280 Hanover St.
Palo Alto, CA 94306

John Hopkins University
Applied Physics Laboratory
Attn: W. R. Powell
John Hopkins Road
Laurel, MD 20810

Kellam, Bird, Johnson Inc.
Attn: J. Ayers
612 North Park St.
Columbus, OH 43215

Lea County Electric Coop.
Attn: Pete Felfe
P. O. Box 1447
Lovington, NM 88260

Lockheed Missile & Space Co.
Attn: Matthew McCargo
3251 Hanover St.
Palo Alto, CA 94304

Martin Marietta Corp. (2)
Attn: M. Imamura
R. Hein
P. O. Box 179
Denver, CO 80201

Mass Design Architects and Planners
Attn: Gordon F. Tully
146 Mount Auborn Street
Cambridge, MA 02138

McGraw Edison
Power Systems Division
Attn: B. Owens
Cannonsburg, PA 15317

Microwave Associates
Attn: George Allendorf
South Avenue
Burlington, MA 01803

Midwest Research Institute
SOLERAS Project
Attn: H. Cranfill
425 Volker Blvd.
Kansas City, MO 64110

Mission Research Corp.
1720 Randolph SE
Albuquerque, NM 87106

Mobil Solar Energy Corp.(2)
Attn: K. Ravi
M. Ellis
16 Hickory Drive
Waltham, MA 02254

MONEGON
Attn: H. L. Macomber
4 Professional Drive
Suite 130
Gaithersburg, MD 20760

Motorola Gov. Electronics Div.
Attn: R. Kendall
5005 East McDowell Road
Phoenix, AZ.85008

Mueller Associates, Inc.
Attn: A. J. Parker, Jr.
1900 Sulphur Spring Road
Baltimore, MD 21227

Mueller Associates, Inc.
Attn: J. Shingleton
600 Maryland Ave., SW
Suite 430
Washington, DC 20024

National Research Council of Canada
Photovoltaic Division
Montreal Road
Ottawa, CANADA K1A0R6

National Rural Electric Cooperative
Association
Attn: W. Prichett
1800 Massachusetts Ave., NW
Washington, DC 20036

New Mexico Solar Energy Institute
Attn: H. Zwibel
Box 3 SOL
Las Cruces, NM 88003

NMERI
Attn: Gerald Leigh
Campus P. O.Box 25
Albuquerque, NM 87131

Oklahoma Gas and Electric.
Attn: J. D. Hampton
P. O. Box 321
Oklahoma City, OK 73101

Owens-Illinois, Inc.
Attn: P. S. Friedman
P. O. Box 1035
Toledo, OH 43666

Pacific Gas and Electric Company
Attn: K. Harper
Generation Planning Dept.
77 Beale St., Room 1389
San Francisco, CA 94106

Pacific Gas and Electric Co.
Attn: Steve Hester
3400 Crow Canyon Road
San Ramon, CA 94583

Pacific Power and Light
Attn: Steve Carr
920 SW 6th Avenue
Portland, OR 97204

Photon Power
Attn: D. Kilfoyle
13 Founders Blvd.
El Paso, TX 79906

Photovoltaic Energy Systems
Attn: Paul Maycock
2401 Childs Lane
Alexandria, VA 22308

PNM
Attn: R. Frank Burcham
Alvarado Square
Albuquerque, NM 87158

Polaroid Corp.
Attn: Larry Kaufman
Building N-2X
One Upland Road
Norwood, MA 02062

PRC System Services Co.
Attn: E. E. Paro
7911 Charlotte Drive
Huntsville, AL 35802

Progress Industries
Attn: K. Busche
7290 Murdy Circle
Huntington Beach, CA 92649

Public Service Co. of New Mexico
Alvarado Square
Attn: Howard Maddox
Mail Stop 0202
Albuquerque, NM 87158

Public Service Electric & Gas Co.
Attn: Harry Roman
Advanced Systems Research and Dev.
P. O. Box 570
Newark, NJ 07101

Research Triangle Institute
Attn: R. A. Whisenant
P. O. Box 12194
Research Triangle Park, NC 27709

SAI
Attn: Y. P. Gupta
8400 West Park Drive
McLean, VA 22102

Sacramento Municipal Utility District
Attn: M. Anderson
6201 S. Street
Box 15830
Sacramento, CA 95813

Salt River Project
Attn: A. B. Cummings
P.O. Box 1980
Phoenix, AZ 85001

Salt River Project
Attn: Steve Chalmers
P. O. Box 1980
Phoenix, AZ 85001

San Diego Gas & Electric Co.
Attn: Sid Gilligan
P. O. Box 1831
San Diego, CA 92112

San Diego Gas & Electric Co.
Attn: Wesley Goodwin
M.S. BC8
P. O. Box 1831
San Diego, CA 92112

San Jose State University
Attn: Helmer Nielsen
Dept. of Mechanical Engineering
Washington Square
San Jose, CA 95192

SES, Inc. (2)
Attn: Ted Russell
Al Keser
Tralee Industrial Park
Newark, DE 19711

Sir William Halcrow & Partners
Attn: M. R. Starr
Burderop Park, Swindon SN4 OQD
UK

Solar America
Attn: B. Spottswood
1001 Connecticut NW
Suite 728
Washington, DC 20036

Solar America Inc.
Attn: Leon Cooper
2620 San Mateo NE
Suite H
Albuquerque, NM 87111

Solar Design Assoc.
Attn: S. Strong
271 Washington
Canton, MA 02021

Solar Development
Attn: R. Graven
431 57th Street
Downers Grove, IL 60515

Solar Energy Information Services
Attn: J. Bereny
P. O. Box 19475
Sacramento, CA 95819

Southern Cal. Edison
Attn: N. Patapoff
2244 Walnut Grove Ave.
Rosemead, CA 91170

Southern Company Services, Inc.
Attn: Tim Petty, R&D Dept.
P. O. Box 2625
Birmingham, AL 35202

Southern California Edison Co.
Attn: Nick Patapoff
Research & Development
P. O. Box 800
Rosemead, CA 91770

Spectrolab
Attn: G. L. McDorman
12500 Gladstone Avenue
Sylmar, CA 91342

Spire Corporation
Attn: R. G. Little
Patriots Park
Bedford, MA 01730

Standard Oil Company of Ohio
Attn: A. H. Clark
3092 Broadway
Cleveland, OH 44115

Stone & Webster Engr.
Attn: K. Hogeland
245 Summer St.
Boston, MA 02101

Strategies Unlimited
Attn: R. Johnson
201 San Antonio Circle
Suite 205
Mt. View, CA 94040

Texas Electric Service Co.
Attn: Linda Terrel
P. O. Box 970
Ft. Worth, TX 76101-0970

Texas Instruments, Inc.
Attn: Jules D. Levine
P. O. Box 225303 M/S 158
Dallas, TX 75265

Texas Tech University
Attn: E. W. Kiesling
Department of Civil Engineering
P. O. Box 4089
Lubbock, TX 79409

Theodore Barry & Associates
Attn: J. Ayers
1520 Wilshire Boulevard
Los Angeles, CA 90017

Thermo Electron Corporation
Attn: R. Scharlack
101 First Avenue
Waltham, MA 02154

Travis-Braun and Associates, Inc.
Attn: E. E. Braun
4140 Office Parkway
Dallas, TX 75204

TriSolar Corporation
Attn: R. W. Matlin
6 Alfred Circle
Bedford, MA 01730

Underwriters Laboratories
Attn: W. J. Christian
333 Pfingsten Road
Northbrook, IL 60062

Underwriters Laboratories, Inc.
Attn: Allan Levins
1285 Walt Whitman Road
Melville, NY 11747

United Technologies Corp.
Power Systems Div.
Attn: Ramon Rosati
P. O. Box 109
South Windsor, CT 06074

University of Arkansas
Attn: Jerry Yeargau
Electrical Engr. Dept.
Fayetteville, AR 72701

University of Texas at Arlington
Attn: W. Dillon
Electrical Engr. Dept.
Arlington, TX 76019

UTL
Attn: Shing Mao
4500 W. Mockingbird
Dallas, TX 75209

Varian Associates
Attn: P. Borden
611 Hansen Way
Palo Alto, CA 94303

Virginia Electric and Power
Attn: Robert Combs
P. O.Box 564
Richmond, VA 23204

Virginia Electric Power Co.
Attn: Tim Bernadowski
P. O. Box 564
Richmond, VA 23204

Western Wood Products Association
Attn: V. Riolo
Yeon Building
Portland, Oregon 97204

Westinghouse R&D Center
Attn: R. K. Riel, 801-3
1310 Beulah Road
Pittsburgh, PA 15235

William M. Brobeck and Associates
Attn: W. W. Eukel
1235 Tenth Street
Berkeley, CA 94710

Windworks
Attn: H. Meyer
Rt. 3 Box 44A
Mukwonago, WI 53149

Wisconsin Power & Light
Attn: Richard Morgan
P. O. Box 192
Madison, WI 53701

Wyle Laboratories
Attn: R. E. Losey
7800 Governors Drive West
Huntsville, AL 35807

| | |
|---|---|
| 6200 | V. L. Dugan |
| 6220 | D. G. Schueler |
| 6221 | E. L. Burgess |
| 6221 | M. K. Fuentes |
| 6221 | H. J. Gerwin |
| 6221 | T. D. Harrison |
| 6221 | D. F. Menicucci |
| 6221 | M. G. Thomas |
| 6222 | H. H. Baxter |
| 6223 | D. G. Schueler, Actg. Supv. |
| 6223 | D. Chu |
| 6223 | T. S. Key |
| 6223 | G. J. Jones (50) |
| 6223 | H. N. Post |
| 6223 | J. W. Stevens |
| 6224 | E. C. Boes |
| 3151 | W. L. Garner (3) |
| 8214 | M. A. Pound |
| 3141 | L. J. Erickson (5) |

☆U.S. GOVERNMENT PRINTING OFFICE:1984—776-027 / 4270