SANDIA REPORT SAND81—2489 • Unlimited Release
Printed July 1982

Filter Characterization

Charles P. Stanton

Prepared by
Sandia National Laboratories
Albuquerque, New Mexico 87185 and Livermore, California 94550
for the United States Department of Energy
under Contract DE-AC04-76DP00789

When printing a copy of any digitized SAND Report, you are required to update the markings to current standards.

SF 2900-Q(6-82)

Issued by Sandia National Laboratories, operated for the United States Department of Energy by Sandia Corporation.

NOTICE: This report was prepared as an account of work sponsored by an agency of the United States Government. Neither the United States Government nor any agency thereof, nor any of their employees, nor any of their contractors, subcontractors, or their employees, makes any warranty, express or implied, or assumes any legal liability or responsibility for the accuracy, completeness, or usefulness of any information, apparatus, product, or process disclosed, or represents that its use would not infringe privately owned rights. Reference herein to any specific commercial product, process, or service by trade name, trademark, manufacturer, or otherwise, does not necessarily constitute or imply its endorsement, recommendation, or favoring by the United States Government, any agency thereof or any of their contractors or subcontractors. The views and opinions expressed herein do not necessarily state or reflect those of the United States Government, any agency thereof or any of their contractors or subcontractors.

Printed in the United States of America
Available from
National Technical Information Service
U.S. Department of Commerce
5285 Port Royal Road
Springfield, VA 22161

NTIS price codes
Printed copy: A03
Microfiche copy: A01

SAND81-2489
Unlimited Release
Printed July 1982

FILTER CHARACTERIZATION

Charles P. Stanton
Electrical Components Division 2153
Sandia National Laboratories
Albuquerque, New Mexico 87185

ABSTRACT

This paper provides some insight into the characteristic response of filters versus frequency and loading. A computer program is provided which will allow the user to vary the filter model in order to assess the effect of specific conditions.

Table of Contents

	Page
Introduction	7
Lumped-Element Model	7
Full Model Configuration and Simplifications	9
Description of Appendices	12
Appendix A--Filter Parameters	13
Appendix B--Derivation of Equation 1	14
Appendix C--Listing of Computer Program "Anlyz"	15
Appendix D--Data and Plots of Filter Response	22

Illustrations

Figure		
1	Lumped-Element Schematic of MC2871	8
2	Frequency Response of Lumped-Element MC2871	8
3	Complete Model of MC2871	9
4	Low-Frequency Model of MC2871	10
5	High-Frequency Model of MC2871	10
6	Physical/Electrical Representation of Model	11

Introduction

Lumped-element filters are networks comprised of combinations of discrete resistors, inductors, and capacitors. They are distinguished from distributed networks such as a coaxial line having values which may be in infinitely small increments. A lumped-element network, meanwhile, may have similar aggregate values but they will not be distributed along a significant electrical line length. These lumped elements frequently have characteristics such as the "distributed capacitance" of an inductor which will completely alter the response of that component at different frequencies. Lumped-element low-pass filters may have ac responses that are not predictable without an intimate knowledge of their electrical parameters. These responses may vary widely with frequency and with differing terminations and it is of little or no consequence what design technique is used.

This paper will show some of the characteristics of the filter that cause these responses. Measured data will be presented as the basis for the development of a model which will prove useful in predicting the response over a wide frequency range with various loads.

Of the numerous filter types currently specified and in use in Sandia systems, the MC2871 will be used as the primary basis for the development of a model. Pertinent parameters for several other filters will be given in order to tailor a similar model for these filters. The other types to be considered are the MC2867, the MC2868, the MC2944, and the MC3288.

Lumped-Element Model

Using the lumped-constant values for the MC2871, it appears schematically as shown in Figure 1.

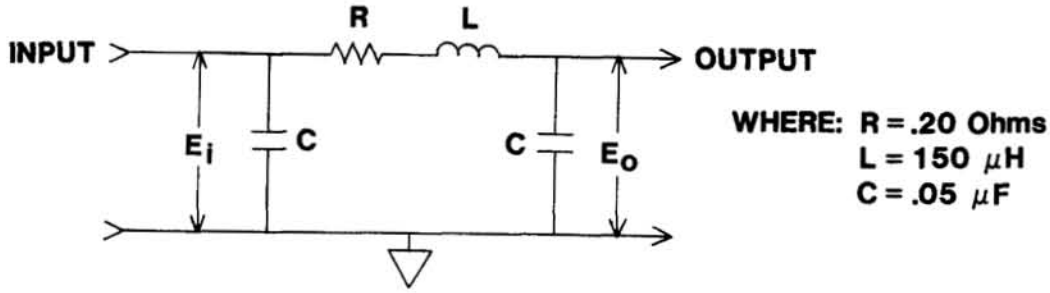

Figure 1

The voltage response of Figure 1 is

$$20 \log \left[(\omega^2 LC-1)^2 + (\omega RC)^2 \right]^{1/2} \text{ dB}, \tag{1}$$

and is plotted in Figure 2.

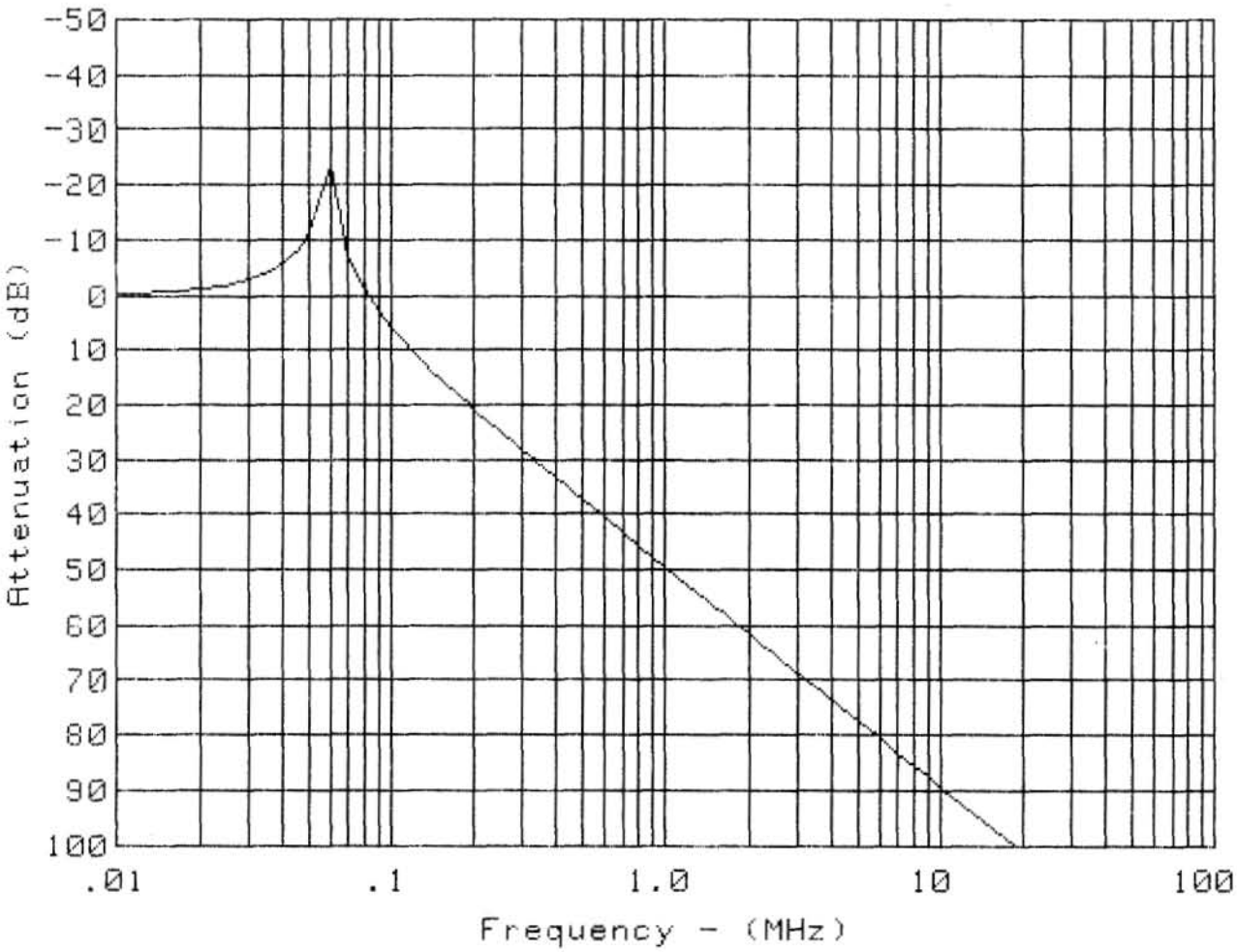

Figure 2

This model will approximate the attenuation response of the MC2871 fairly well up to about 2 MHz, but yields significant error in both impedance and phase from below 100 kHz.

Full Model Configuration and Simplifications

Since the required frequency spectrum for these filter types is from the low audio frequencies to 15 GHz, a model will be used that encompasses all known elements. Simplifications will be identified as appropriate.

Configuring a model to yield accurate responses over this frequency range requires a knowledge of the distributed capacitance of the inductive elements and the location and value of 'parasitic' elements.

A complete model of the MC2871 will look like Figure 3 to the extent that parameters are measurable or predictable.

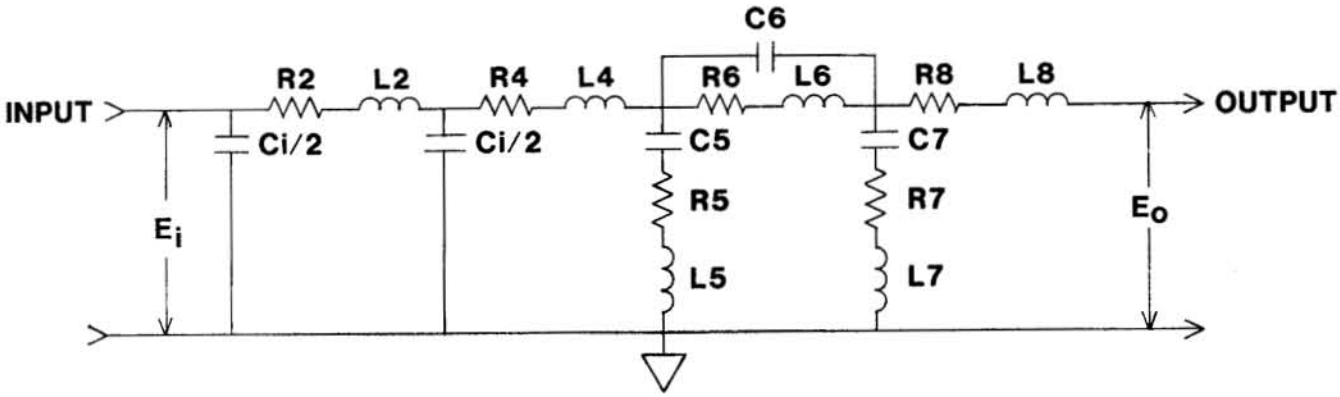

WHERE: R2 = R4 = 0 Ω
R5 = R7 = .70 Ω
R6 = .200 Ω
R8 = 0
L2 = 5 nH
L4 = 10 nH
L5 = L7 = 0
L6 = 150 μH
L8 = 44 nH
Ci = 2 pF
C5 = C7 = .05 μF
C6 = 3.17 pF

Figure 3

At frequencies below about 5 MHz, the model of Figure 3 may be simplified to that of Figure 4.

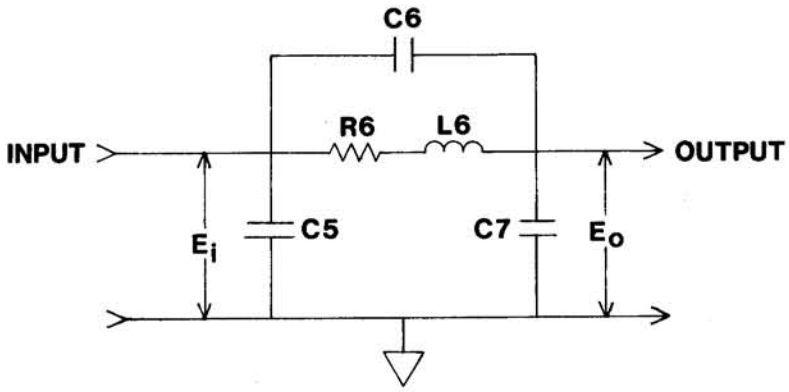

Figure 4

At frequencies above about 20 MHz, the model may be simplified to that of Figure 5.

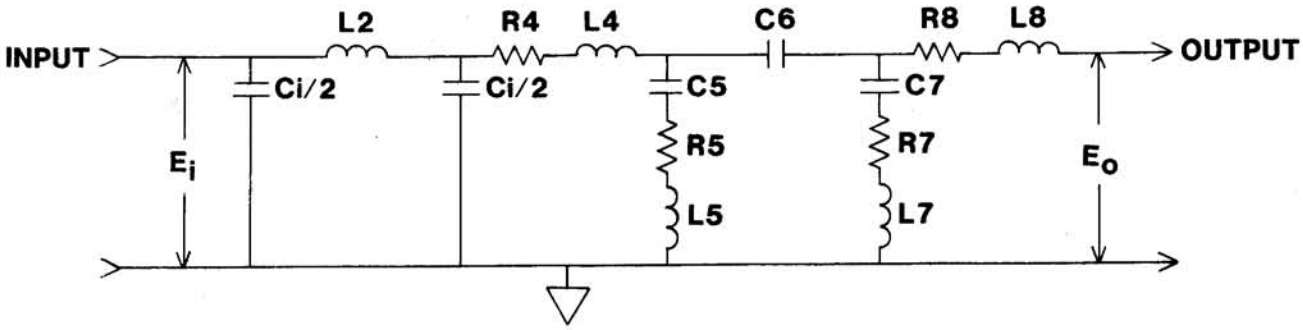

Figure 5

In the frequency range from about 2 MHz to 20 MHz, it is necessary to consider the model as it is shown in Figure 3. In this range, the impedance of C6 begins to predominate that of R6 and L6 and also the impedance of elements Ci, L2, L4, and L8 start to become significant.

The models in Figures 1, 3, 4, and 5 all assume a perfect ground return connection having zero resistance. This resistance value is a function of the mechanics of mounting and the condition of the metals or oxides at that mechanical interface. This resistance is the result of an effect not entirely associated with the filter alone, so will not be considered here. Other experimenters have studied this effect to some degree and it probably merits further study.

Figure 6 shows pictorially what physical parts comprise the various electrical elements of Figure 3. The ground return is picked up by the filter shell into which the parts are assembled and which is not depicted in this figure.

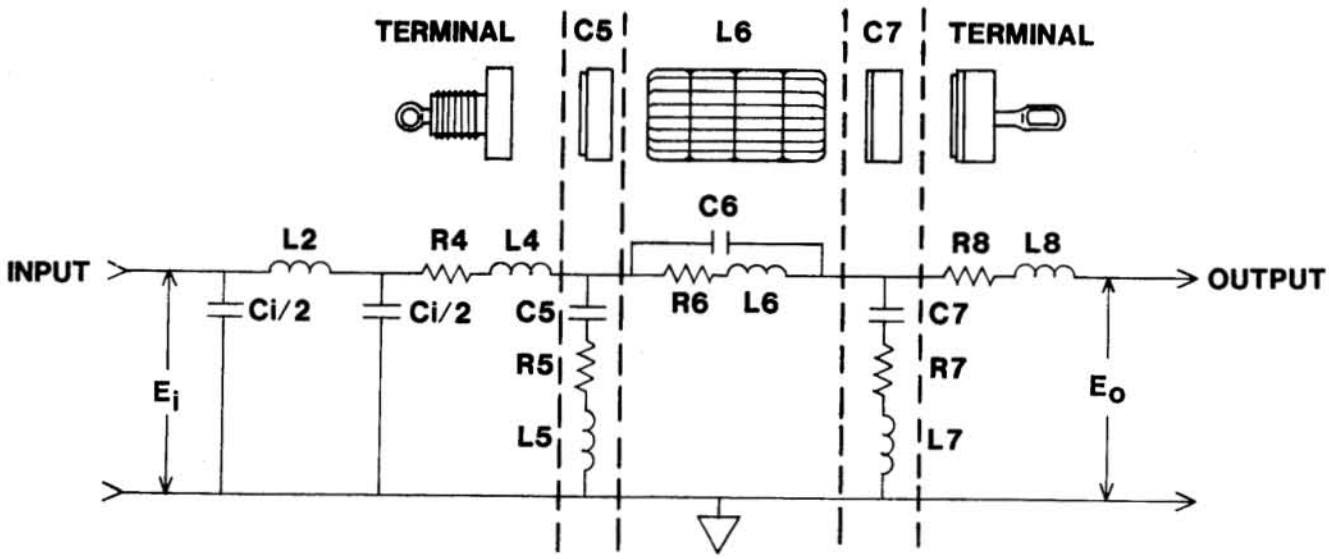

Figure 6

Description of Appendices

Appendix A lists the directly measurable parameters of the filter types covered by this paper.

The derivation of Equation 1 is given in Appendix B.

Appendix C lists a computer program called "Anlyz" written in BASIC language for the Hewlett-Packard model 9845B computer. This program calculates and plots attenuation, impedance, and phase. It is designed to cover the frequency range 10 kHz to 15 GHz. No data above 100 MHz is presented here, however, as verification of the model accuracy has not been undertaken above this frequency. The driven end is at the input of the filter model. The format used in this program is standard with the 9845B computer. Equations used in the calculation section of the program follow standard complex notation.

Appendix D is a compilation of plots (with a partial data listing) of the response of the MC2871 filter under a variety of load conditions. Also included are plots for the unloaded output of all of the filter types discussed.

CPS:mcm:6340A:10/30/82X

APPENDIX A

TABLE 1

	MC2867/ MC3288	MC2868	MC2871	MC2944
R2	0.0Ω	0.0Ω	0.0Ω	.7Ω
R5	.7Ω	.7Ω	.7Ω	.7Ω
R6	.045Ω	.024Ω	.200Ω	.009Ω
R7	.7Ω	.7Ω	.7Ω	.7Ω
L2	5.0 nH	5.0 nH	5.0 nH	20.0 nH
L4	10.0 nH	10.0 nH	10.0 nH	10.0 nH
L6	90.0 μH	45.0 μH	150.0 μH	1.24 μH
L8	53.0 nH	50.0 nH	44.0 nH	79.0 nH
Ci	1.5 pF	1.5 pF	2.0 pF	1.5 pF
C5	.15 μF	.10 μF	.05 μF	.05 μF
C6	4.74 pF	3.40 pF	3.17 pF	.54 pF
C7	.15 μF	.10 μF	.05 μF	.05 μF

APPENDIX B

Derivation of Equation 1.

Given the circuit of Figure 1 with the output open-circuited,

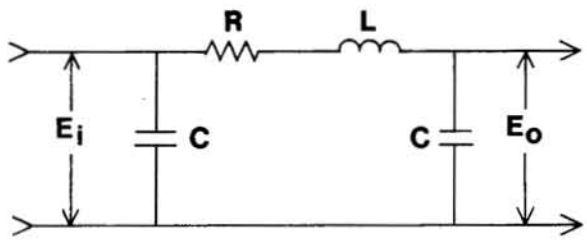

the voltage attenuation A is given by the relationship:

$A = 20 \log \frac{E_i}{E_o}$ dB, where: E_i = the voltage applied to the input.

E_o = the voltage appearing across the output capacitor.

$$A = 20 \log \left(\frac{E_i}{I_c \left(\frac{1}{\omega C} \right)} \right) \text{dB}$$

$$= 20 \log \left(\frac{E_i \omega C}{I_c} \right) \text{dB} = 20 \log \frac{E_i \omega C}{\frac{E_i}{\sqrt{R^2 + \left(\omega L - \frac{1}{\omega C} \right)^2}}} \text{dB}$$

$$= 20 \log (\omega C) \sqrt{R^2 + \omega L - \left(\frac{1}{\omega C} \right)^2} \text{dB}$$

$$= 20 \log \sqrt{(\omega RC)^2 + (\omega C)^2 \left(\frac{\omega^2 LC - 1}{\omega C} \right)^2} \text{dB}$$

$$= 20 \log \sqrt{(\omega RC)^2 + \left(\omega^2 LC - 1 \right)^2} \text{dB}$$

APPENDIX C

```
10    !       The name of this program is "Anlyz".  Original 4-15-1981.
20    DIM Eout(100),Xbr19(100),Ybr19(100),Zin(100),Angle(100),Atten(100)
30    DIM Type$[50],Load$[60]
40    Type$="MC2871 Filter"
50    Ein=1.00
60    R2=0
70    R4=0
80    R5=.70
90    R6=.2
100   Rc6=0
110   R7=.70
120   R8=0
130   R9=1E15  ! Note: Check value of `Load$' in line 130.
140   Load$="OUTPUT   Open-circuited"
150   L2=5E-9
160   L4=.0000000100
170   L5=0
180   L6=1.50E-4
190   L7=0
200   L8=4.4E-8
210   L9=0 ! Note: Check value of `Load$' in line 130.
220   Cinput=2.0E-12
230   C1=Cinput/2
240   C3=Cinput/2
250   C5=5E-8
260   C6=3.17E-12
270   C7=5E-8
280   C9=1E33    ! Note: Check value of `Load$' in line 130.
290   Copy$="N"
300   PRINTER IS 0
310   BEEP
320   INPUT "        Do you want a copy of the schematic; Yes or No? ",Copy$
330   IF UPC$(Copy$[1.00,1.00])="Y" THEN 350
340   GOTO 870
350   PRINT ,LIN(10)
360   PRINT TAB(29),"Component Values"
370   PRINT ""
380   PRINT ""
390   PRINT TAB(18),"Branch";TAB(31),"R";TAB(43),"L";TAB(55),"C"
400   PRINT !
410   FLOAT 2
420   PRINT TAB(20),"1";TAB(27),"";TAB(39),"";TAB(51),C1
430   PRINT TAB(20),"2";TAB(27),R2;TAB(39),L2;TAB(51),""
440   PRINT TAB(20),"3";TAB(27),"";TAB(39),"";TAB(51),C3
450   PRINT TAB(20),"4";TAB(27),R4;TAB(39),L4;TAB(51),""
460   PRINT TAB(20),"5";TAB(27),R5;TAB(39),L5;TAB(51),C5
470   PRINT TAB(20),"6";TAB(27),R6;TAB(39),L6;TAB(51),C6
480   PRINT TAB(20),"7";TAB(27),R7;TAB(39),L7;TAB(51),C7
490   PRINT TAB(20),"8";TAB(27),R8;TAB(39),L8;TAB(51),""
500   PRINT TAB(20),"9";TAB(27),R9;TAB(39),L9;TAB(51),C9
510   PRINT !
520   PRINT !
530   PRINT !
540   PRINT SPA(3);
550   FOR P=1.00 TO 10
560      PRINT CHR$(228);SPA(2),CHR$(236);SPA(2),CHR$(228);
570   NEXT P
580   PRINT !
590   PRINT !
600   PRINT !
```

```
610   PRINT "                                    Rc6    C6"
620   PRINT "                                  ---'\/\---||---"
630   PRINT "                                  |             |"
640   PRINT "                                  |             |"
650   PRINT "            R2   L2     R4    L4   |  R6    L6   |   R8    L8"
660   PRINT "      >-----'\/\- J00----'\/\--000-----'\/\--000-----'\/\--000---o"
670   PRINT "          |          |             |             |                |"
680   PRINT "          |          |             |             |                |"
690   PRINT "          |          |        C5  ---           ---  C7          /"
700   PRINT "          |          |            ---           ---          R9  \"
710   PRINT "      C1  |          |   C3        |             |               /
   L"
720   PRINT "         ---        ---           /             /                |"
730   PRINT "         ---        ---       R5  \             \   R7           0
   O"
740   PRINT " Zin-->   |          |            /             /           L9  0"
750   PRINT "          |          |            |             |               0
   A"
760   PRINT "          |          |            |             |                |"
770   PRINT "          |          |            0             0                |
   D"
780   PRINT "          |          |        L5  0             0  L7       C9 ---
"
790   PRINT "          |          |            0             0               ---
"
800   PRINT "          |          |            |             |                |"
810   PRINT "    Gnd.  |          |            |             |                |"
820   PRINT "      >-------------------------------------------------------o"
830   PRINT !
840   PRINT PAGE
850   PRINT !
860   PRINT !
870   PRINTER IS 16
880   Band$="L"
890   PRINT "          Low band = 10kHz to 100 MHz"
900   PRINT "          High band = 100MHz to 15 GHz"
910   BEEP
920   INPUT "Do you wish the Low band or High band?",Band$
930   PRINTER IS 0
940   Output$="L"
950   Again$="Y"
960   INPUT "Do you wish to List data, plot Impedance & Phase, plot Attenu
ation, or Stop ?",Output$
970   IF UPC$(Output$[1.00,1.00])="I" THEN 990
980   IF (UPC$(Output$[1.00,1.00])="L") OR (UPC$(Output$[1.00,1.00])="A") THEN 1
010
990   INPUT "What is the Maximum Impedance value for the Plot?",B
1000  FOR P=1.00 TO 2
1010  IF UPC$(Band$[1.00,1.00])="H" THEN 1130
1020  FOR Y=1.00 TO 4
1030  IF Y<4 THEN 1070
1040  FOR X=1.00 TO 10
1050  IF (X>5) AND (2*X MOD 2<>0) THEN 1650
1060  GOTO 1230
1070  FOR X=1.00 TO 9 STEP .100
1080  IF (UPC$(Output$[1.00,1.00])="I") AND (X=1.00) AND (Y=1.00) AND (P=1.00) T
HEN GOSUB Graph
1090  IF (UPC$(Output$[1.00,1.00])="A") AND (X=1.00) AND (Y=1.00) THEN GOSUB Gra
ph
1100  IF (X>5) AND (2*X MOD 2<>0) THEN 1650
1110  IF (UPC$(Output$[1.00,1.00])="A") OR (UPC$(Output$[1.00,1.00])="I") THEN 1
240
1120  GOTO 1230
1130  FOR Y=5 TO 7
1140  IF Y<7 THEN 1180
1150  FOR X=1.00 TO 10 STEP .5
```

```
1160  IF (UPC$(Band$[1.00,1.00])="L") AND (X>5) AND (2*X MOD 2<>0) THEN 1650
1170  GOTO 1230
1180  FOR X=1.00 TO 9 STEP .5
1190  IF (UPC$(Output$[1.00,1.00])="I") AND (X=1.00) AND (Y=5) AND (P=1.00) THEN
 GOSUB Graph
1200  IF (UPC$(Output$[1.00,1.00])="A") AND (X=1.00) AND (Y=5) THEN GOSUB Graph
1210  IF (UPC$(Band$[1.00,1.00])="H") AND (X>7) AND (2*X MOD 2<>0) THEN 1650
1220  IF (UPC$(Output$[1.00,1.00])="A") OR (UPC$(Output$[1.00,1.00])="I") THEN 1
240
1230  PRINTER IS 0
1240  F1=10^(Y-3)*1E6
1250  Freq=X*F1
1260  IF (UPC$(Output$[1.00,1.00])="A") OR (UPC$(Output$[1.00,1.00])="I") THEN G
OSUB Calc
1270  IF (UPC$(Output$[1.00,1.00])="I") AND (P=1.00) THEN GOSUB Plot_imp
1280  IF (UPC$(Output$[1.00,1.00])="I") AND (P=2) THEN GOSUB Plot_angle
1290  IF UPC$(Output$[1.00,1.00])="A" THEN GOSUB Plot_atten
1300  IF (UPC$(Output$[1.00,1.00])="A") OR (UPC$(Output$[1.00,1.00])="I") THEN 1
650
1310  IF UPC$(Band$[1.00,1.00])="H" THEN 1340
1320  IF (X>1.00) OR (Y>1.00) THEN 1420
1330  GOTO 1350
1340  IF (X>1.00) OR (Y>5) THEN 1420
1350  PRINT TAB(15),Type$;" - ";Load$
1360  PRINT !
1370  PRINT !
1380  PRINT TAB(6);"Frequency";TAB(21);"Impedance";TAB(35);"   Atten   ";
1390  PRINT TAB(49);"   Itotal  ";TAB(66);"  Eout "
1400  PRINT TAB(8);"(MHz)";TAB(22);"(ohms)";TAB(38);"(dB)"
1410  PRINT !
1420  IF Freq>1.5E10 THEN 1660
1430  IF Freq>=1E8 THEN 1590
1440  IF Freq>=1E7 THEN 1560
1450  IF Freq>=1E6 THEN 1530
1460  IF Freq>=1E5 THEN 1500
1470  FIXED 4
1480  PRINT TAB(8),Freq/1E6;
1490  GOTO 1610
1500  FIXED 3
1510  PRINT TAB(8),Freq/1E6;
1520  GOTO 1610
1530  FIXED 2
1540  PRINT TAB(7),Freq/1E6;
1550  GOTO 1610
1560  FIXED 1.00
1570  PRINT TAB(6),Freq/1E6;
1580  GOTO 1610
1590  FIXED 0
1600  PRINT TAB(5),Freq/1E6;
1610 GOSUB Calc
1620  IF (UPC$(Output$[1.00,1.00])="I") OR (UPC$(Output$[1.00,1.00])="A") OR (UP
C$(Output$[1.00,1.00])="S") THEN 1650
1630  FLOAT 2
1640  PRINT TAB(20),Zin;TAB(36),Atten;TAB(50);Itotal;TAB(65),Eout
1650  NEXT X
1660  NEXT Y
1670  IF UPC$(Output$[1.00,1.00])="L" THEN 1710
1680  IF UPC$(Output$[1.00,1.00])="A" THEN 1720
1690  NEXT P
1700  IF UPC$(Output$[1.00,1.00])="I" THEN 1720
1710  GOTO 1810
1720  PRINT ,LIN(10)
1730  DUMP GRAPHICS
1740  EXIT GRAPHICS
1750  PRINTER IS 0
1760  PRINT PAGE
```

```
1770  BEEP
1780  INPUT "Do you wish another Plot; Yes or No? ",Again$
1790  IF UPC$(Again$[1.00,1.00])="Y" THEN 960
1800  GOTO 4270
1810  PRINT PAGE
1820  PRINTER IS 16
1830  INPUT "Do you wish a Plot; Yes or No? ",Again$
1840  IF UPC$(Again$[1.00,1.00])="Y" THEN 960
1850  GOTO 4230
1860 Graph: !
1870  PLOTTER IS "GRAPHICS"
1880  GRAPHICS
1890  SETUU
1900  LOCATE 10,110,10,85
1910  IF UPC$(Band$[1.00,1.00])="H" THEN 1940
1920  SCALE 0,4,0,15
1930  GOTO 1950
1940  SCALE 0,3,0,15
1950  F1=10^(Y-3)*1E6
1960  GRID 1.00,1.00
1970  FOR N=1.00 TO 9
1980    GRID 1.00,0,LGT(N),0
1990  NEXT N
2000  IF UPC$(Band$[1.00,1.00])="H" THEN 2070
2010  MOVE -.12,-.8
2020  LABEL ".01          .1          1.0          10          100"
2030  MOVE 2,-1.5
2040  LORG 5
2050  LABEL "Frequency - (MHz)"
2060  GOTO 2120
2070  MOVE -.08,-.8
2080  LABEL "100              1000            10000"
2090  MOVE 1.5,-1.5
2100  LORG 5
2110  LABEL "Frequency - (MHz)"
2120  LORG 8
2130  FIXED 0
2140  IF UPC$(Output$[1.00,1.00])="A" THEN 2530
2150  CSIZE 3
2160  FOR U=0 TO 15
2170    MOVE .03,U
2180    D=U*B/15
2190    LABEL D
2200  NEXT U
2210  MOVE -.32,1.00
2220  DEG
2230  LDIR 90
2240  LORG 4
2250  IF UPC$(Band$[1.00,1.00])="H" THEN 2290
2260  MOVE -.33,7.5
2270  LABEL "Input Impedance in Ohms (solid line)"
2280  GOTO 2310
2290  MOVE -.23,7.5
2300  LABEL "Input Impedance in Ohms (solid line)"
2310  LDIR 0
2320  LORG 2
2330  IF UPC$(Band$[1.00,1.00])="H" THEN 2400
2340  FOR E=2 TO 14
2350    F=15*(E-2)-90
2360    MOVE 4.05,E
2370    LABEL F
2380  NEXT E
2390  GOTO 2450
2400  FOR E=2 TO 14
2410    F=15*(E-2)-90
2420    MOVE 3.05,E
```

```
2430    LABEL F
2440  NEXT E
2450  LDIR 90
2460  LORG 4
2470  IF UPC$(Band$[1.00,1.00])="H" THEN 2510
2480  MOVE 4.4,7.5
2490  LABEL "Phase Angle in Deg (dotted line)"
2500  GOTO 2530
2510  MOVE 3.3,7.5
2520  LABEL "Phase Angle in Deg (dotted line)"
2530  IF UPC$(Output$[1.00,1.00])="I" THEN 2680
2540  FOR U=0 TO 15
2550    MOVE .03,U
2560    G=100-10*U
2570    LABEL G
2580  NEXT U
2590  DEG
2600  LDIR 90
2610  LORG 4
2620  IF UPC$(Band$[1.00,1.00])="H" THEN 2660
2630  MOVE -.33,7.5
2640  LABEL "Attenuation (dB)"
2650  GOTO 2680
2660  MOVE -.24,7.5
2670  LABEL "Attenuation (dB)"
2680  LDIR 0
2690  IF UPC$(Band$[1.00,1.00])="H" THEN 2720
2700  MOVE 2,17.5
2710  GOTO 2730
2720  MOVE 1.5,17.5
2730  CSIZE 6
2740  LORG 5
2750  LABEL Type$
2760  IF UPC$(Band$[1.00,1.00])="H" THEN 2790
2770  MOVE 2,16
2780  GOTO 2800
2790  MOVE 1.5,16
2800  CSIZE 3
2810  LORG 5
2820  LABEL Load$
2830  RETURN
2840 Plot_imp: !
2850   LINE TYPE 1.00
2860  IF UPC$(Band$[1.00,1.00])="H" THEN 2890
2870   IF (X>1.00) OR (Y>1.00) THEN 2910
2880   GOTO 2900
2890   IF (X>1.00) OR (Y>5) THEN 2910
2900   MOVE 0,0
2910   LINE TYPE 1.00
2920   PLOT Horiz,Vert_imp,-1.00
2930  RETURN
2940 Plot_angle: !
2950  IF UPC$(Band$[1.00,1.00])="H" THEN 2980
2960   IF (X>1.00) OR (Y>1.00) THEN 3020
2970   GOTO 2990
2980   IF (X>1.00) OR (Y>5) THEN 3020
2990   LINE TYPE 1.00
3000   MOVE 0,0
3010   GOTO 3030
3020   LINE TYPE 3
3030   PLOT Horiz,Vert_angle,-1.00
3040  RETURN
3050 Plot_atten: !
3060  IF Atten=99 THEN 3090
3070   LINE TYPE 1.00
3080  GOTO 3100
```

```
3090   LINE TYPE 3
3100  IF UPC$(Band$[1.00,1.00])="H" THEN 3130
3110   IF (X>1.00) OR (Y>1.00) THEN 3150
3120   GOTO 3140
3130   IF (X>1.00) OR (Y>5) THEN 3150
3140   MOVE 0,0
3150   PLOT Horiz,Vert_atten,-1.00
3160  RETURN
3170  GOTO 4270
3180 Calc: !
3190  DEFAULT ON
3200  DEG
3210  Omega=2*PI*Freq
3220  IF UPC$(Type$[1.00,1.00])="MC2871 Filter" THEN 3250
3230  R4=R4+R4*LGT(Freq/1E4)*.25
3240  GOTO 3260
3250  R4=R4
3260  Rx5=R5+.000000100*Freq/1000
3270  Rx6=R6+125*L6*(1.9E-14*Freq^2+8E-7*Freq+3.0E-8*Freq)*LGT(Freq*.001)
3280  Rc6=0
3290  Rx7=R7+.000000100*Freq/1000
3300  Cx5=C5-C5*(1.00-1.00/LGT(Freq/1000))/4
3310  Cx6=C6
3320  Cx7=C7-C7*(1.00-1.00/LGT(Freq/1000))/4
3330  Xbr1=0
3340  Ybr1=-1.00/(Omega*C1)
3350  Xbr2=R2
3360  Ybr2=Omega*L2
3370  Xbr3=0
3380  Ybr3=-1.00/(Omega*C3)
3390  Xbr4=R4
3400  Ybr4=Omega*L4
3410  Xbr5=Rx5
3420  Ybr5=(Omega^2*L5*Cx5-1.00)/(Omega*Cx5)
3430  Denom6=(Rc6+Rx6)^2+(Omega*L6-1.00/(Omega*Cx6))^2
3440  S16=(Rc6*Rx6+L6/Cx6)*(Rc6+Rx6)
3450  S26=(Omega*L6*Rc6-Rx6/(Omega*Cx6))*(Omega*L6-1.00/(Omega*Cx6))
3460  Xbr6=(S16+S26)/Denom6
3470  S36=(Rc6+Rx6)*(Omega*L6*Rc6-Rx6/(Omega*Cx6))
3480  S46=(Rc6*Rx6+L6/Cx6)*(Omega*L6-1.00/(Omega*Cx6))
3490  Ybr6=(S36-S46)/Denom6
3500  Xbr7=Rx7
3510  Ybr7=(Omega^2*L7*Cx7-1.00)/(Omega*Cx7)
3520  Xbr8=R8
3530  Ybr8=Omega*L8
3540  Xbr9=R9
3550  Ybr9=(Omega^2*L9*C9-1.00)/(Omega*C9)
3560  Zbr9=SQR(Xbr9^2+Ybr9^2)
3570  Xbr89=Xbr8+Xbr9
3580  Ybr89=Ybr8+Ybr9
3590  Zbr89=SQR(Xbr89^2+Ybr89^2)
3600  Denom79=(Xbr7+Xbr89)^2+(Ybr7+Ybr89)^2
3610  S179=(Xbr7+Xbr89)*(Xbr7*Xbr89-Ybr7*Ybr89)
3620  S279=(Ybr7+Ybr89)*(Xbr7*Ybr89+Ybr7*Xbr89)
3630  Xbr79=(S179+S279)/Denom79
3640  S379=(Ybr7+Ybr89)*(Ybr7*Ybr89-Xbr7*Xbr89)
3650  S479=(Xbr7+Xbr89)*(Xbr7*Ybr89+Ybr7*Xbr89)
3660  Ybr79=(S379+S479)/Denom79
3670  Zbr79=SQR(Xbr79^2+Ybr79^2)
3680  Xbr69=Xbr6+Xbr79
3690  Ybr69=Ybr6+Ybr79
3700  Zbr69=SQR(Xbr69^2+Ybr69^2)
3710  Denom59=(Xbr5+Xbr69)^2+(Ybr5+Ybr69)^2
3720  S159=(Xbr5+Xbr69)*(Xbr5*Xbr69-Ybr5*Ybr69)
3730  S259=(Ybr5+Ybr69)*(Xbr5*Ybr69+Ybr5*Xbr69)
```

```
3740  Xbr59=(S159+S259)/Denom59
3750  S359=(Ybr5+Ybr69)*(Ybr5*Ybr69-Xbr5*Xbr69)
3760  S459=(Xbr5+Xbr69)*(Xbr5*Ybr69+Ybr5*Xbr69)
3770  Ybr59=(S359+S459)/Denom59
3780  Zbr59=SQR(Xbr59^2+Ybr59^2)
3790  Xbr49=Xbr4+Xbr59
3800  Ybr49=Ybr4+Ybr59
3810  Zbr49=SQR(Xbr49^2+Ybr49^2)
3820  Denom39=(Xbr3+Xbr49)^2+(Ybr3+Ybr49)^2
3830  S139=(Xbr3+Xbr49)*(Xbr3*Xbr49-Ybr3*Ybr49)
3840  S239=(Ybr3+Ybr49)*(Ybr3*Xbr49+Xbr3*Ybr49)
3850  Xbr39=(S139+S239)/Denom39
3860  S339=(Xbr3+Xbr49)*(Ybr3*Xbr49+Xbr3*Ybr49)
3870  S439=(Ybr3+Ybr49)*(Ybr3*Ybr49-Xbr3*Xbr49)
3880  Ybr39=(S339+S439)/Denom39
3890  Zbr39=SQR(Xbr39^2+Ybr39^2)
3900  Xbr29=Xbr2+Xbr39
3910  Ybr29=Ybr2+Ybr39
3920  Zbr29=SQR(Xbr29^2+Ybr29^2)
3930  Denom19=(Xbr1+Xbr29)^2+(Ybr1+Ybr29)^2
3940  S119=(Xbr1+Xbr29)*(Xbr1*Xbr29-Ybr1*Ybr29)
3950  S219=(Ybr1+Ybr29)*(Xbr29*Ybr1+Xbr1*Ybr29)
3960  Xbr19=(S119+S219)/Denom19
3970  S319=(Xbr1+Xbr29)*(Xbr29*Ybr1+Xbr1*Ybr29)
3980  S419=(Ybr1+Ybr29)*(Ybr1*Ybr29-Xbr1*Xbr29)
3990  Ybr19=(S319+S419)/Denom19
4000  Zin=SQR(Xbr19^2+Ybr19^2)
4010  Itotal=Ein/Zin
4020  I29=Ein/Zbr29
4030  E39=I29*Zbr39
4040  I49=E39/Zbr49
4050  E59=I49*Zbr59
4060  I69=E59/Zbr69
4070  E79=I69*Zbr79
4080  I89=E79/Zbr89
4090  Eout=I89*Zbr9
4100  Angle=ATN(Ybr19/Xbr19)
4110  Atten=20*LGT(Ein/Eout)
4120  IF (UPC$(Output$[1.00,1.00])="A") OR (UPC$(Output$[1.00,1.00])="I") THEN 4
140
4130  GOTO 4170
4140  IF Atten>=99 THEN 4160
4150  GOTO 4170
4160  Atten=99
4170  IF UPC$(Band$[1.00,1.00])="H" THEN 4200
4180  Horiz=LGT(Freq)-4
4190  GOTO 4220
4200  IF Freq>1.5E10 THEN 4260
4210  Horiz=LGT(Freq)-8
4220  Vert_imp=15*Zin/B
4230  Vert_angle=Angle/15+8
4240  Vert_atten=15-(Atten/10+5)
4250  DEFAULT OFF
4260  RETURN
4270  PRINTER IS 16
4280  END
```

Appendix D

Component Values

Branch	R	L	C
1			1.00E-12
2	0.00E+00	5.00E-09	
3			1.00E-12
4	0.00E+00	1.00E-08	
5	7.00E-01	0.00E+00	5.00E-08
6	2.00E-01	1.50E-04	3.17E-12
7	7.00E-01	0.00E+00	5.00E-08
8	0.00E+00	4.40E-08	
9	1.00E+15	0.00E+00	1.00E+33

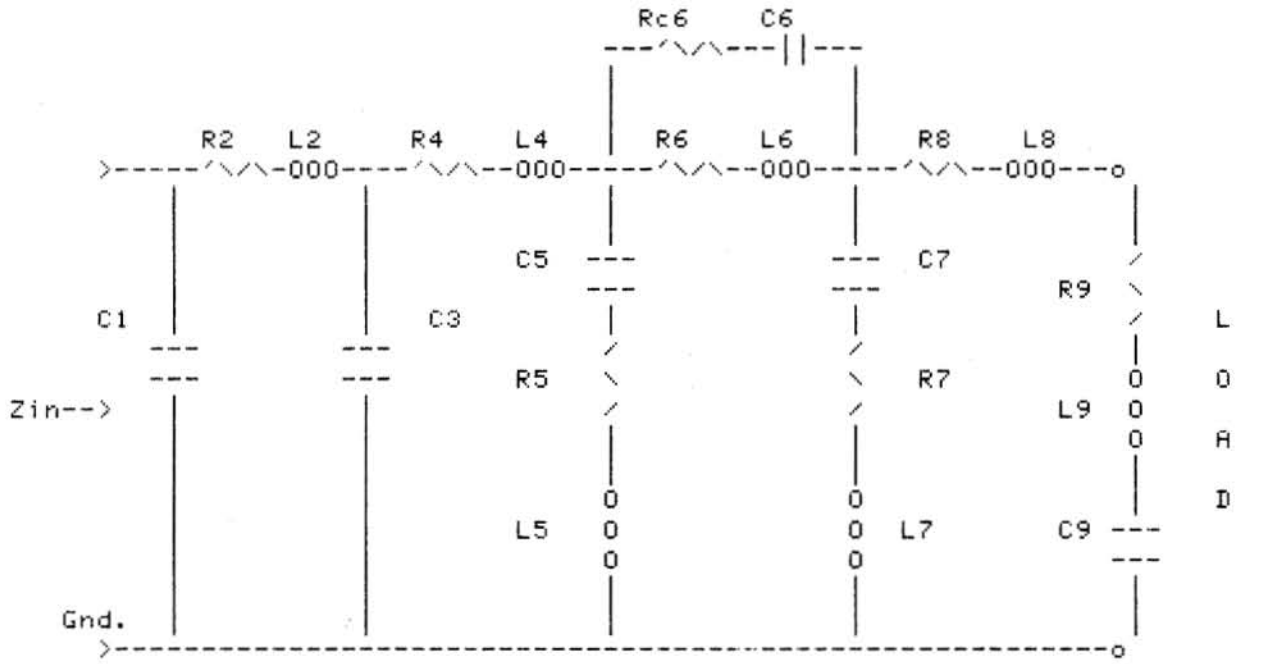

MC2871 Filter - OUTPUT LOAD - 10K OHMS

Frequency (MHz)	Impedance (ohms)	Atten (dB)	Itotal	Eout
.0100	1.57E+02	-2.61E-01	6.38E-03	1.03E+00
.0150	1.07E+02	-5.76E-01	9.38E-03	1.07E+00
.0200	7.95E+01	-1.03E+00	1.26E-02	1.13E+00
.0250	6.21E+01	-1.64E+00	1.61E-02	1.21E+00
.0300	4.97E+01	-2.44E+00	2.01E-02	1.32E+00
.0350	4.00E+01	-3.49E+00	2.50E-02	1.49E+00
.0400	3.19E+01	-4.87E+00	3.13E-02	1.75E+00
.0450	2.47E+01	-6.75E+00	4.05E-02	2.17E+00
.0500	1.79E+01	-9.47E+00	5.60E-02	2.97E+00
.0600	3.09E+00	-2.53E+01	3.23E-01	1.83E+01
.0700	2.05E+01	-1.09E+01	4.87E-02	3.50E+00
.0800	9.13E+01	-3.47E+00	1.10E-02	1.49E+00
.0900	3.88E+02	8.77E-01	2.57E-03	9.04E-01
.100	9.76E+01	4.04E+00	1.02E-02	6.28E-01
.150	3.10E+01	1.36E+01	3.22E-02	2.10E-01
.200	2.08E+01	1.92E+01	4.81E-02	1.09E-01
.250	1.60E+01	2.34E+01	6.26E-02	6.76E-02
.300	1.31E+01	2.67E+01	7.66E-02	4.62E-02
.350	1.11E+01	2.95E+01	9.02E-02	3.37E-02
.400	9.64E+00	3.18E+01	1.04E-01	2.57E-02
.450	8.54E+00	3.39E+01	1.17E-01	2.02E-02
.500	7.67E+00	3.57E+01	1.30E-01	1.64E-02
.600	6.37E+00	3.89E+01	1.57E-01	1.14E-02
.700	5.45E+00	4.15E+01	1.83E-01	8.38E-03
.800	4.77E+00	4.38E+01	2.10E-01	6.44E-03
.900	4.23E+00	4.58E+01	2.36E-01	5.11E-03
1.00	3.81E+00	4.76E+01	2.63E-01	4.16E-03
1.50	2.52E+00	5.44E+01	3.96E-01	1.90E-03
2.00	1.88E+00	5.92E+01	5.33E-01	1.10E-03
2.50	1.49E+00	6.28E+01	6.73E-01	7.27E-04
3.00	1.23E+00	6.57E+01	8.14E-01	5.17E-04
3.50	1.05E+00	6.83E+01	9.55E-01	3.83E-04
4.00	9.19E-01	7.08E+01	1.09E+00	2.90E-04
4.50	8.27E-01	7.32E+01	1.21E+00	2.19E-04
5.00	7.65E-01	7.58E+01	1.31E+00	1.61E-04
6.00	7.06E-01	8.26E+01	1.42E+00	7.42E-05
7.00	7.08E-01	9.72E+01	1.41E+00	1.38E-05
8.00	7.49E-01	9.17E+01	1.33E+00	2.60E-05
9.00	8.14E-01	8.58E+01	1.23E+00	5.13E-05
10.0	8.91E-01	8.34E+01	1.12E+00	6.73E-05
20.0	1.83E+00	8.00E+01	5.47E-01	1.00E-04
30.0	2.79E+00	7.97E+01	3.59E-01	1.03E-04
40.0	3.74E+00	7.96E+01	2.67E-01	1.04E-04
50.0	4.70E+00	7.96E+01	2.13E-01	1.05E-04
60.0	5.65E+00	7.96E+01	1.77E-01	1.05E-04
70.0	6.61E+00	7.95E+01	1.51E-01	1.06E-04
80.0	7.56E+00	7.95E+01	1.32E-01	1.06E-04
90.0	8.53E+00	7.95E+01	1.17E-01	1.06E-04
100	9.49E+00	7.94E+01	1.05E-01	1.07E-04

MC2871 Filter

OUTPUT LOAD - 10K OHMS

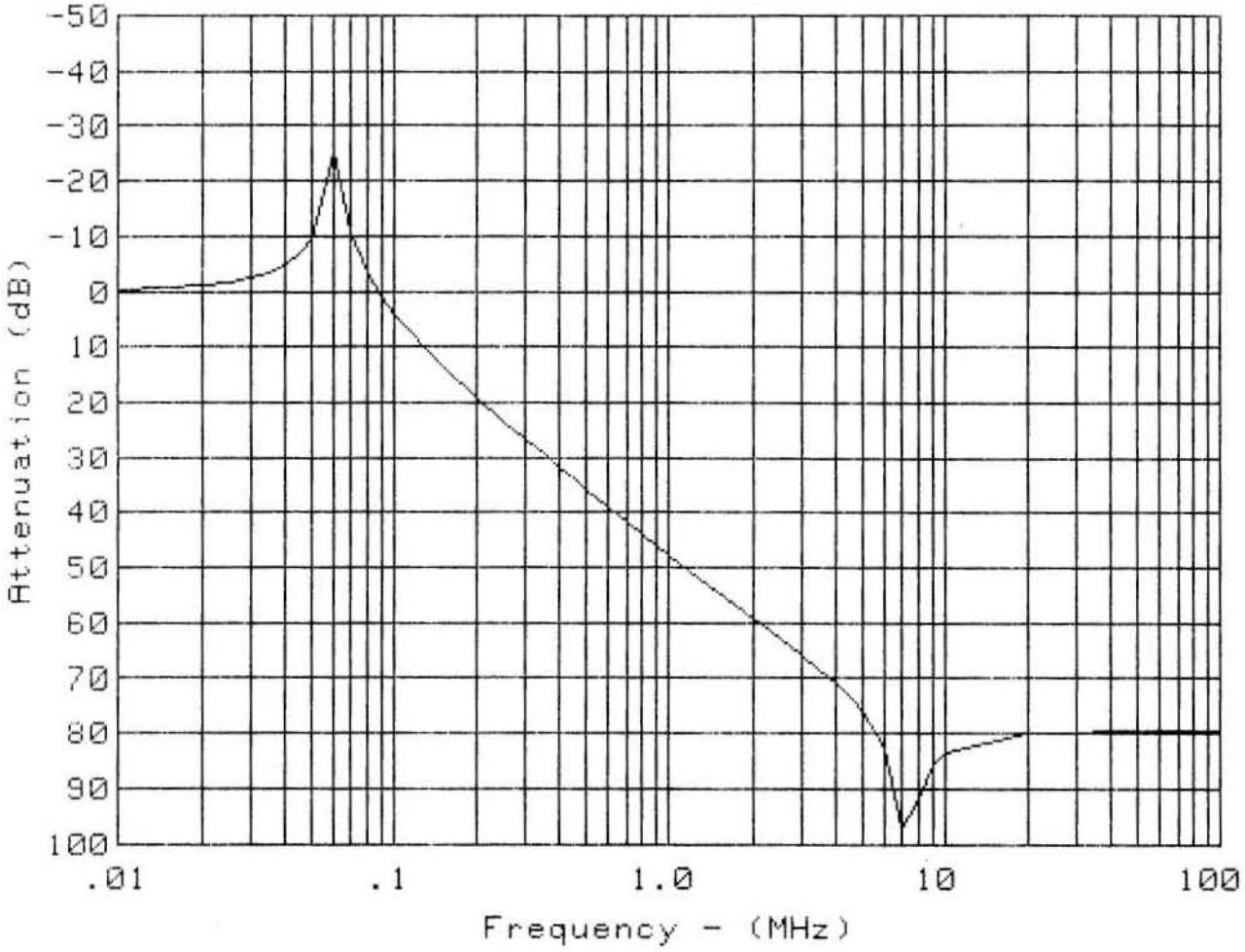

MC2871 Filter

OUTPUT LOAD - 10K OHMS

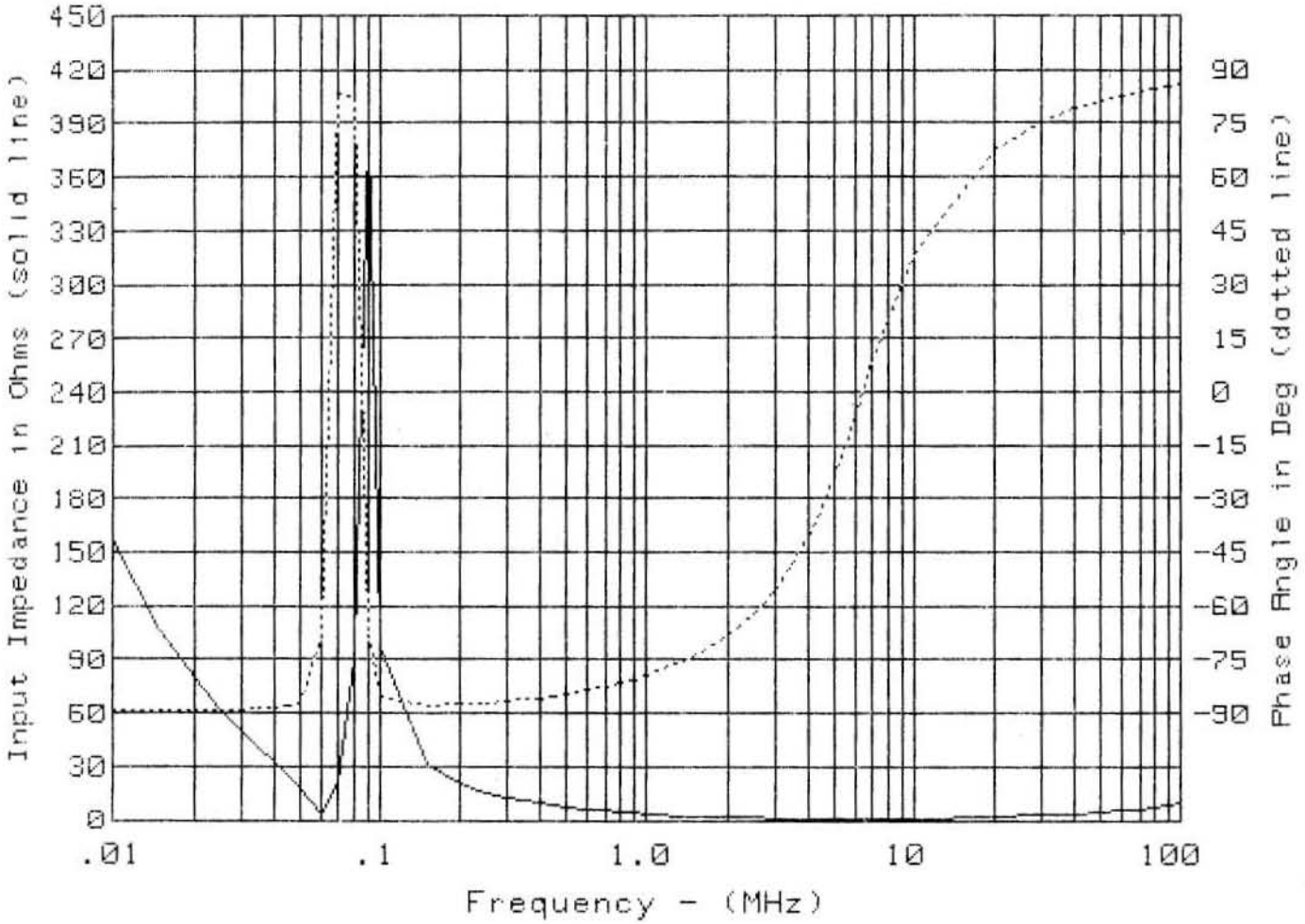

MC2871 Filter

OUTPUT LOAD - 50 Ohms

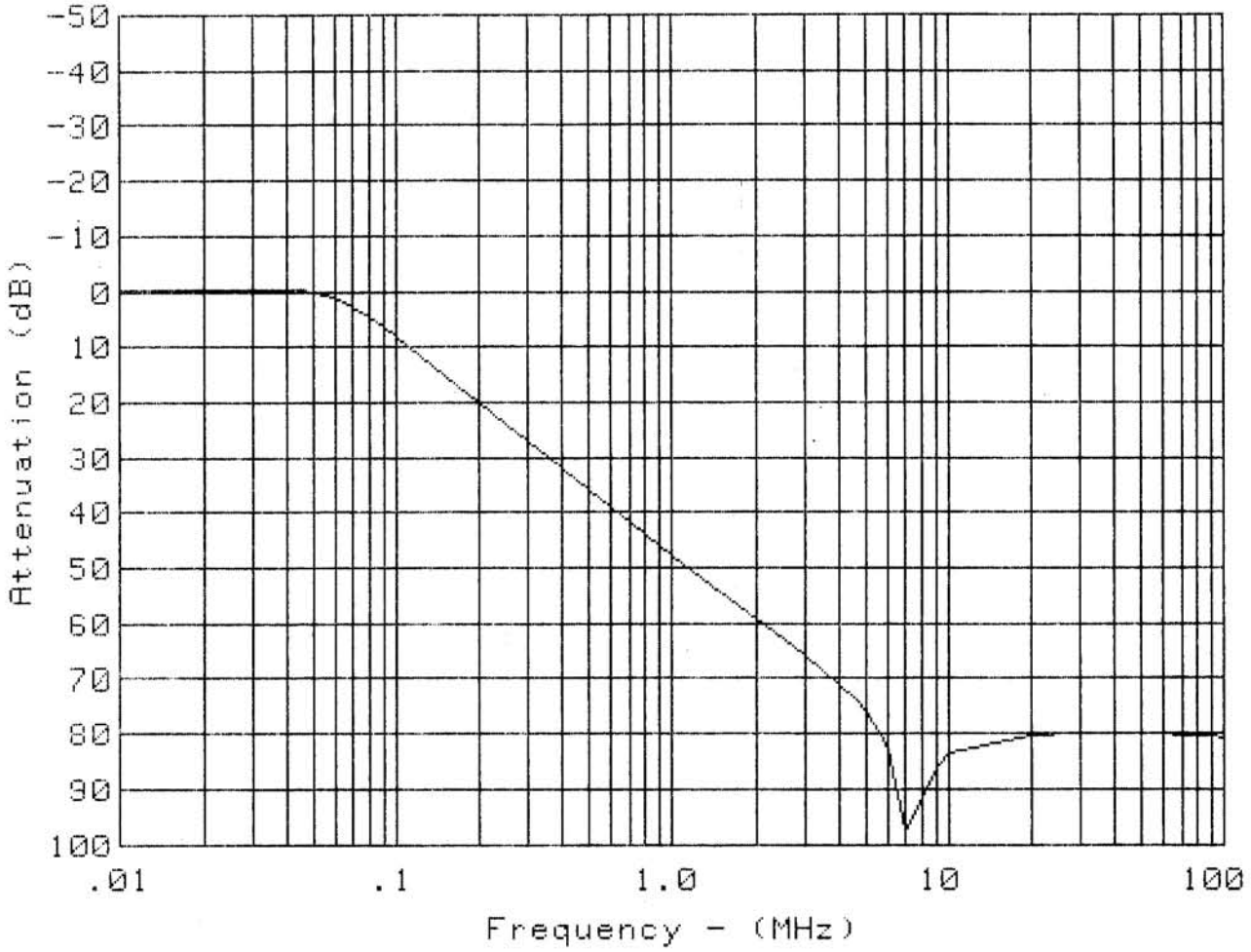

MC2871 Filter

OUTPUT LOAD - 50 Ohms

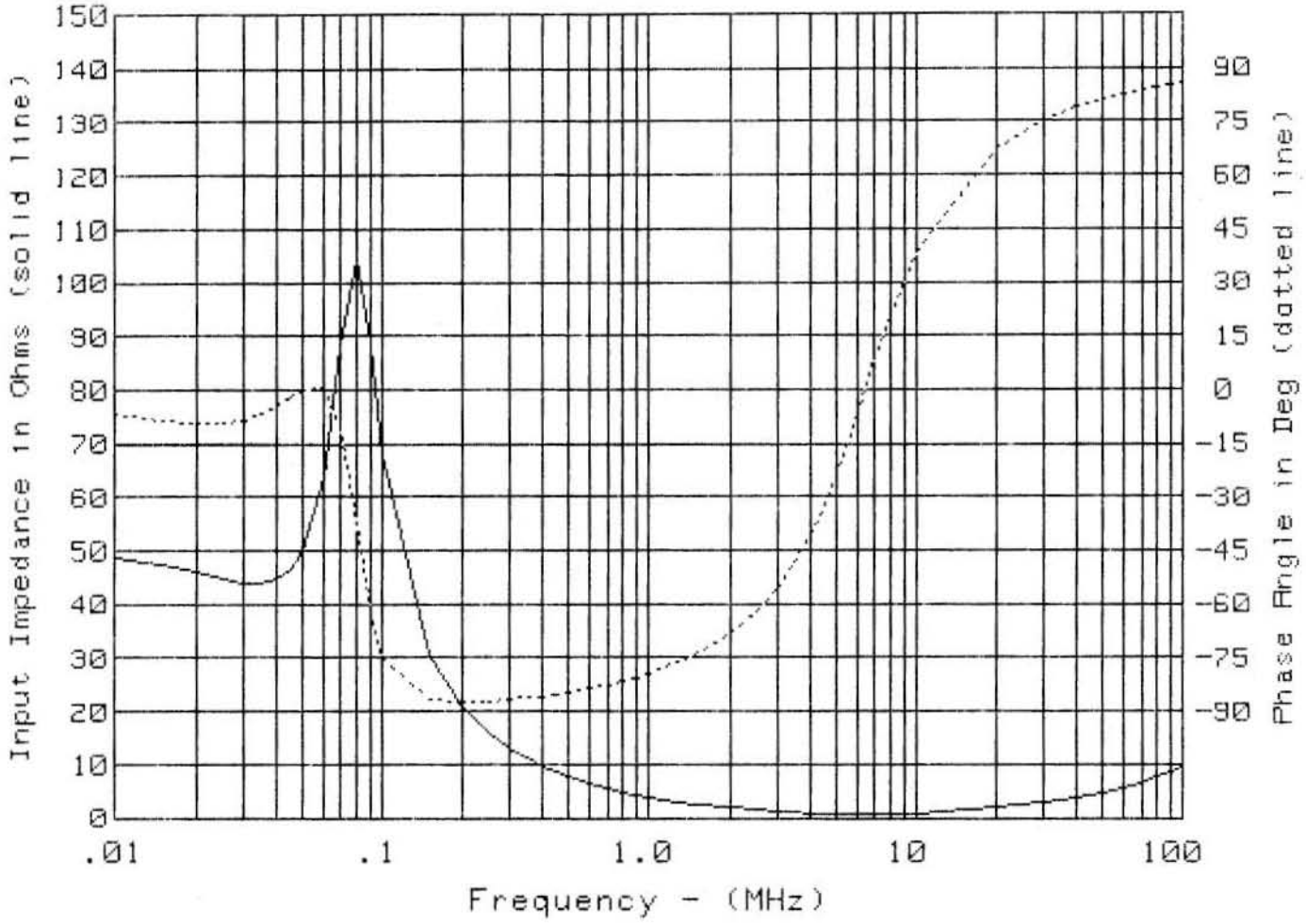

MC2871 Filter

OUTPUT LOAD - 5 milliHenrys

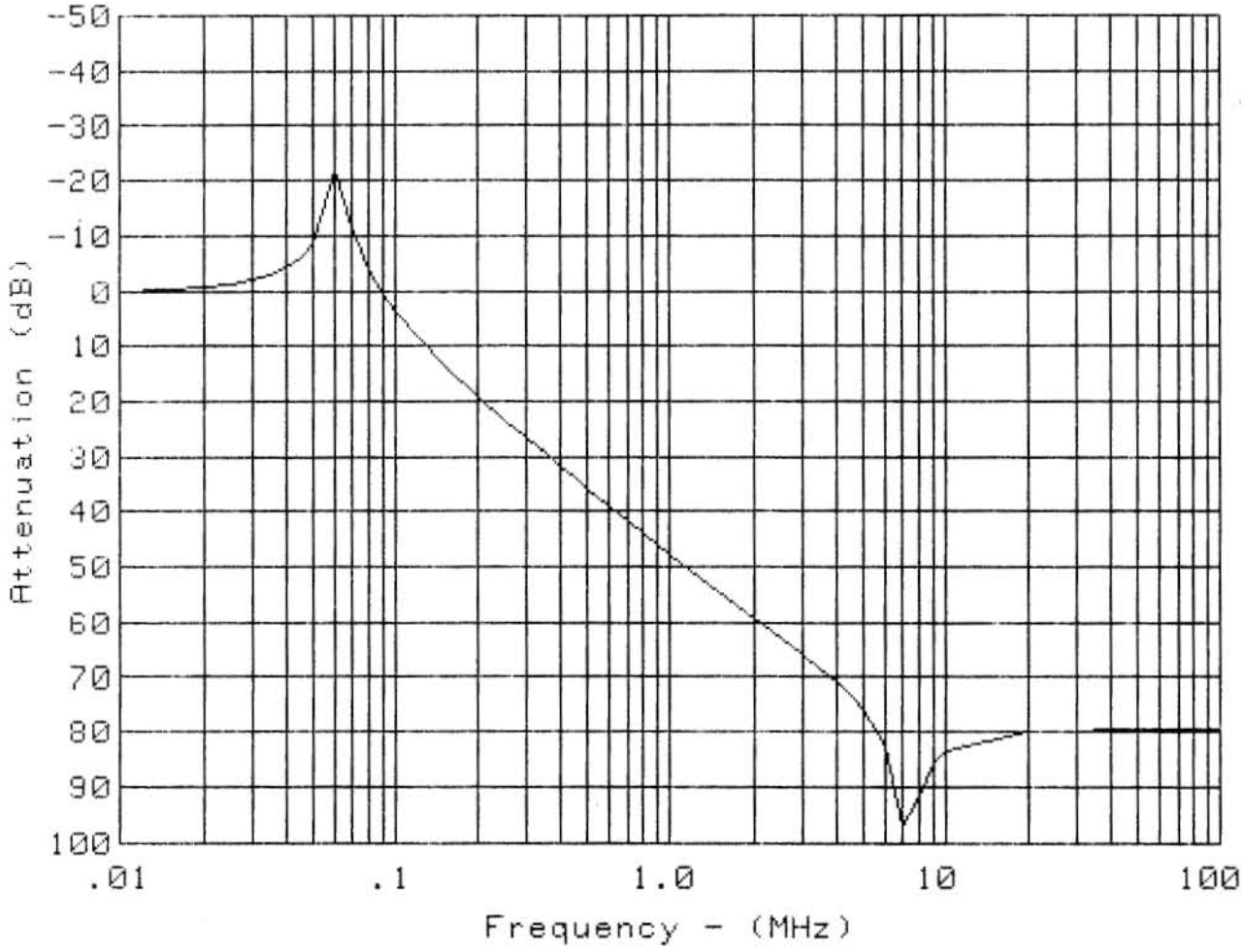

MC2871 Filter

OUTPUT LOAD - 5 milliHenrys

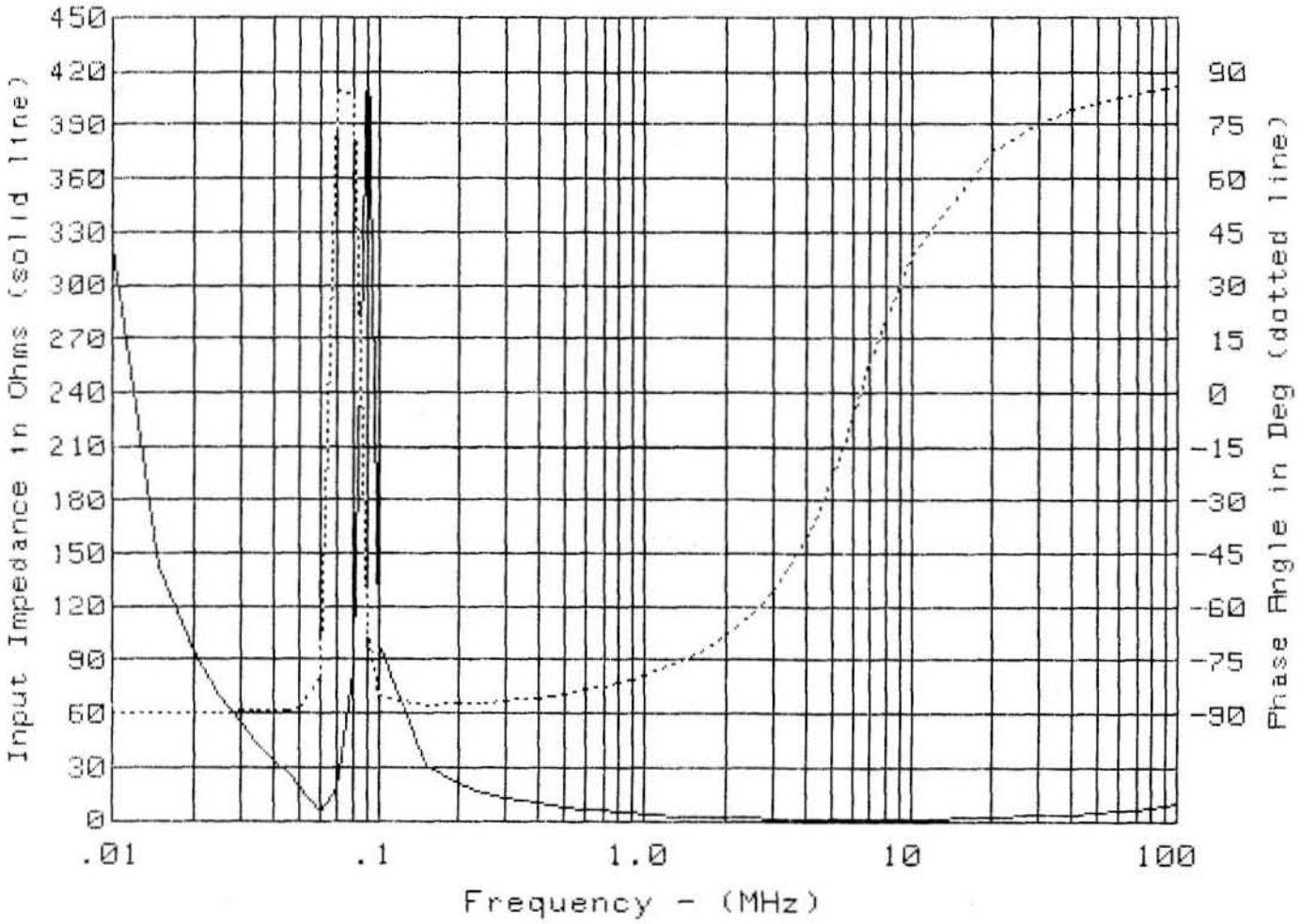

MC2871 Filter

OUTPUT LOAD - 1 nanoHenry

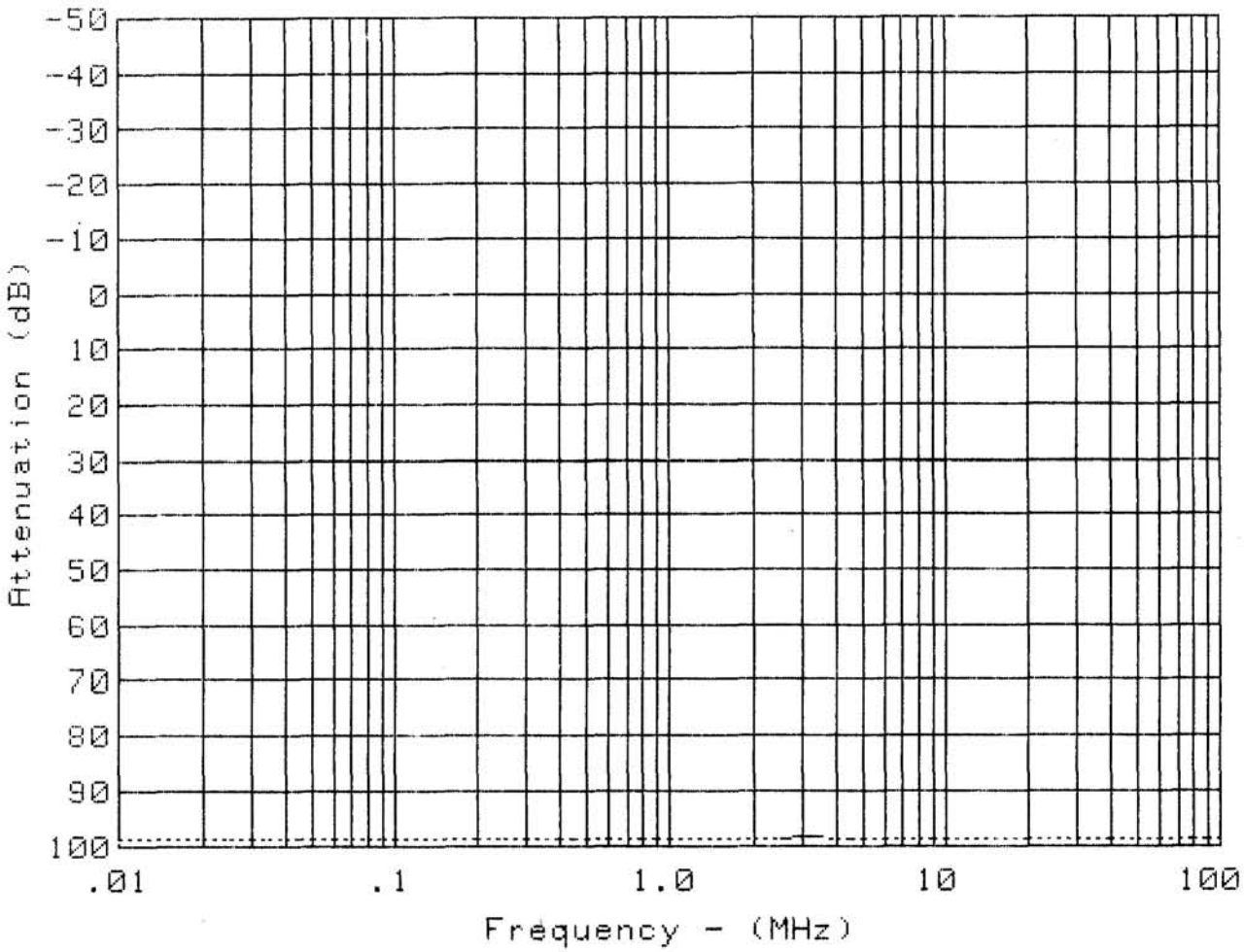

MC2871 Filter

OUTPUT LOAD - 1 nanoHenry

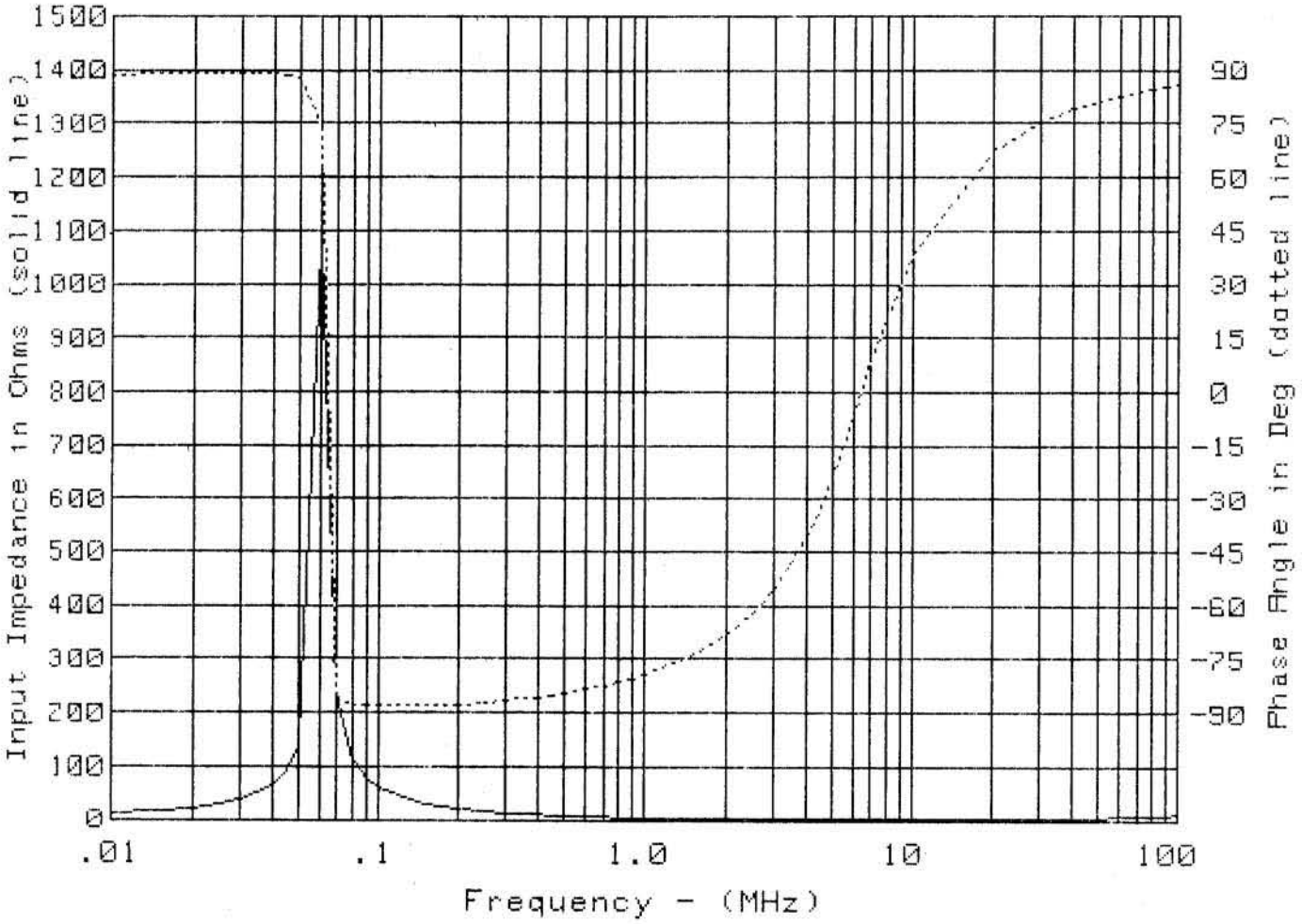

MC2871 Filter

OUTPUT LOAD - 0.5 microFarad

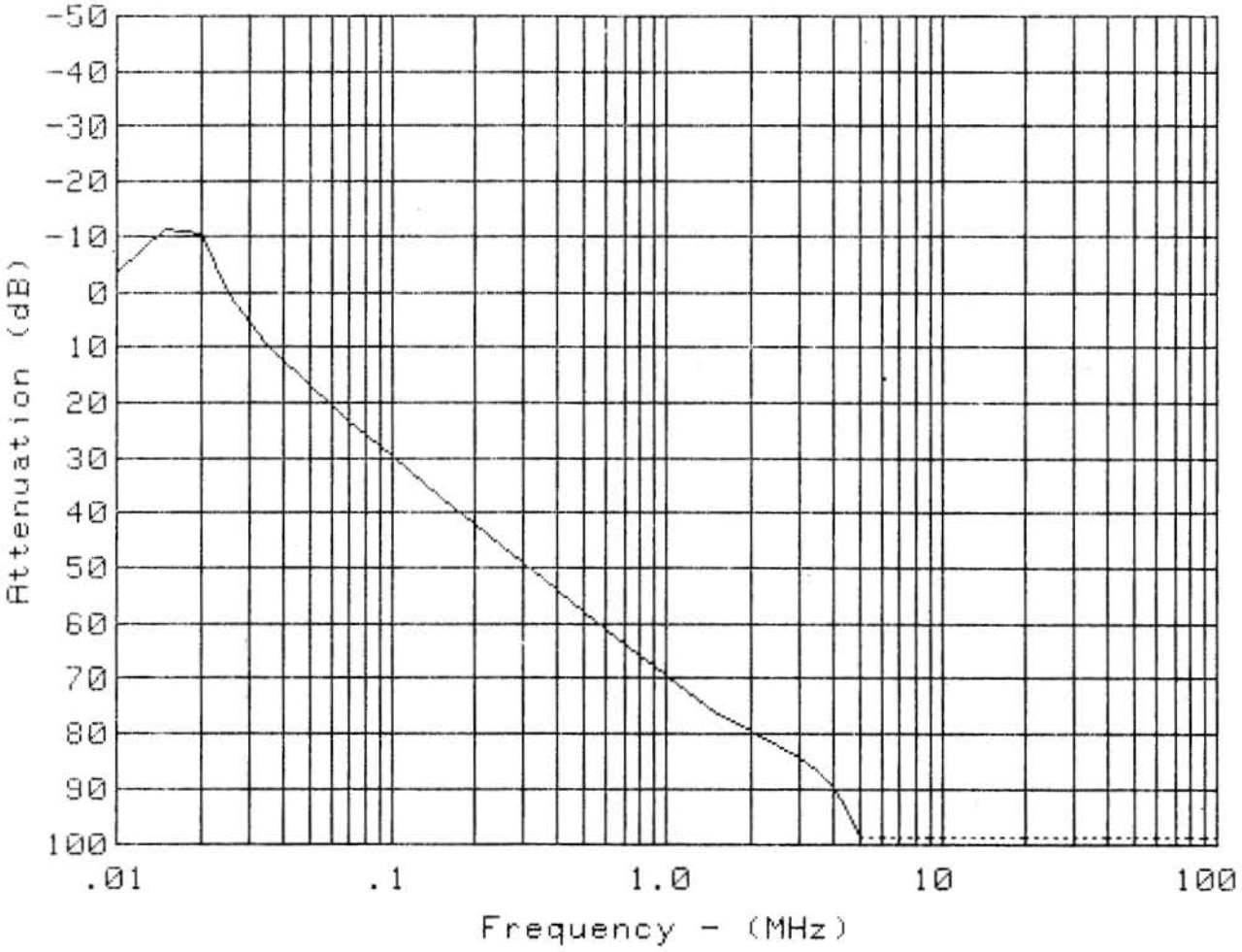

MC2871 Filter

OUTPUT LOAD - 0.5 microFarad

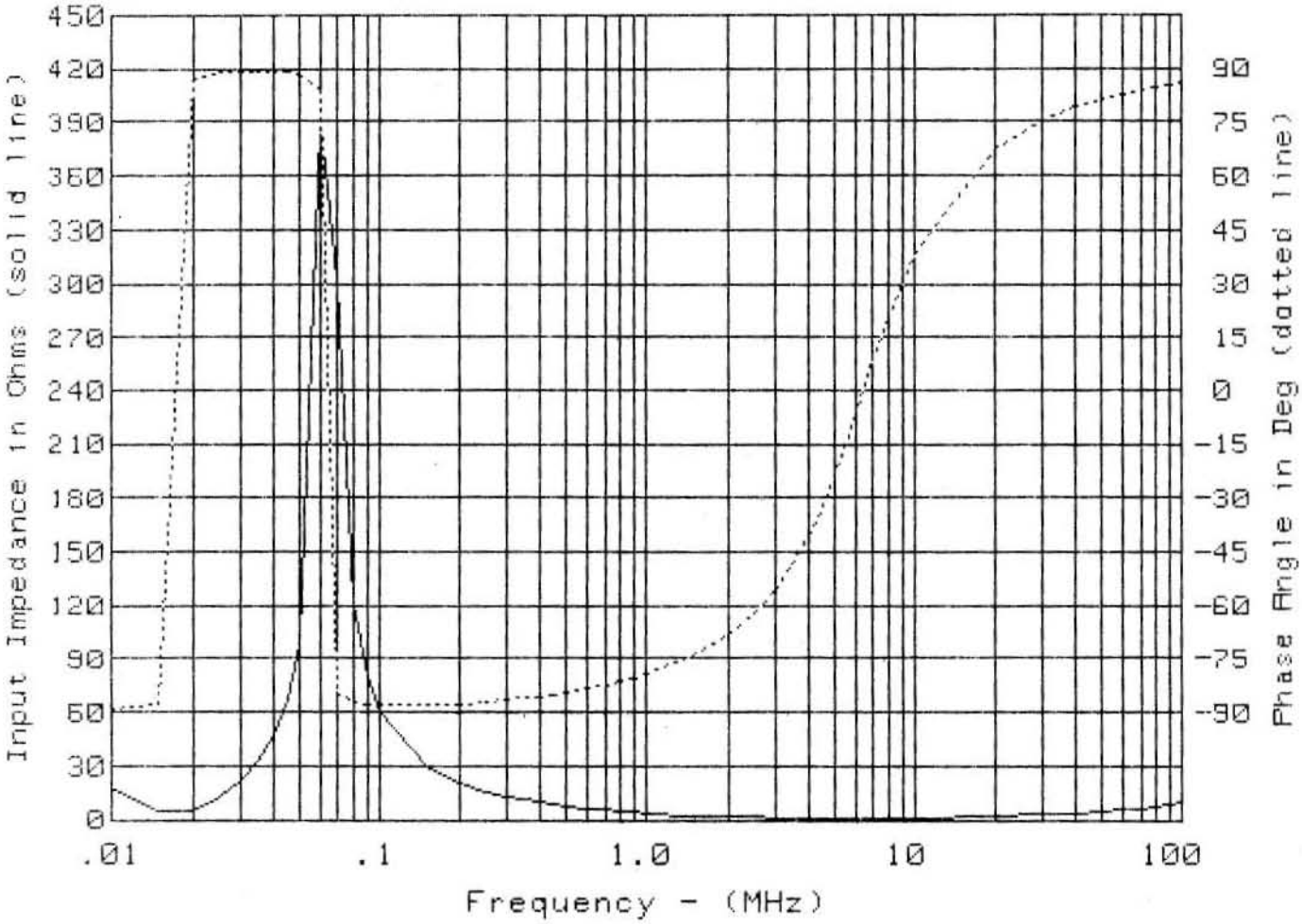

Component Values

Branch	R	L	C
1			1.00E-12
2	0.00E+00	5.00E-09	
3			1.00E-12
4	0.00E+00	1.00E-08	
5	7.00E-01	0.00E+00	5.00E-08
6	2.00E-01	1.50E-04	3.17E-12
7	7.00E-01	0.00E+00	5.00E-08
8	0.00E+00	4.40E-08	
9	1.00E+04	0.00E+00	1.00E+33

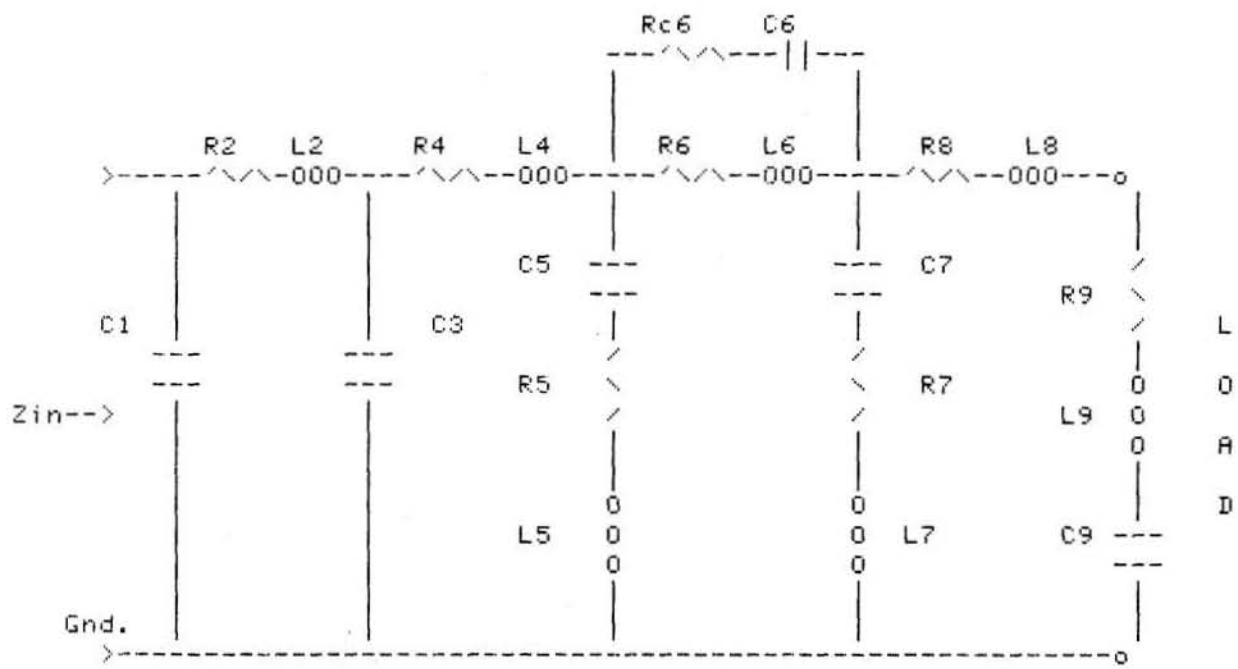

MC2871 Filter

OUTPUT Open-circuited

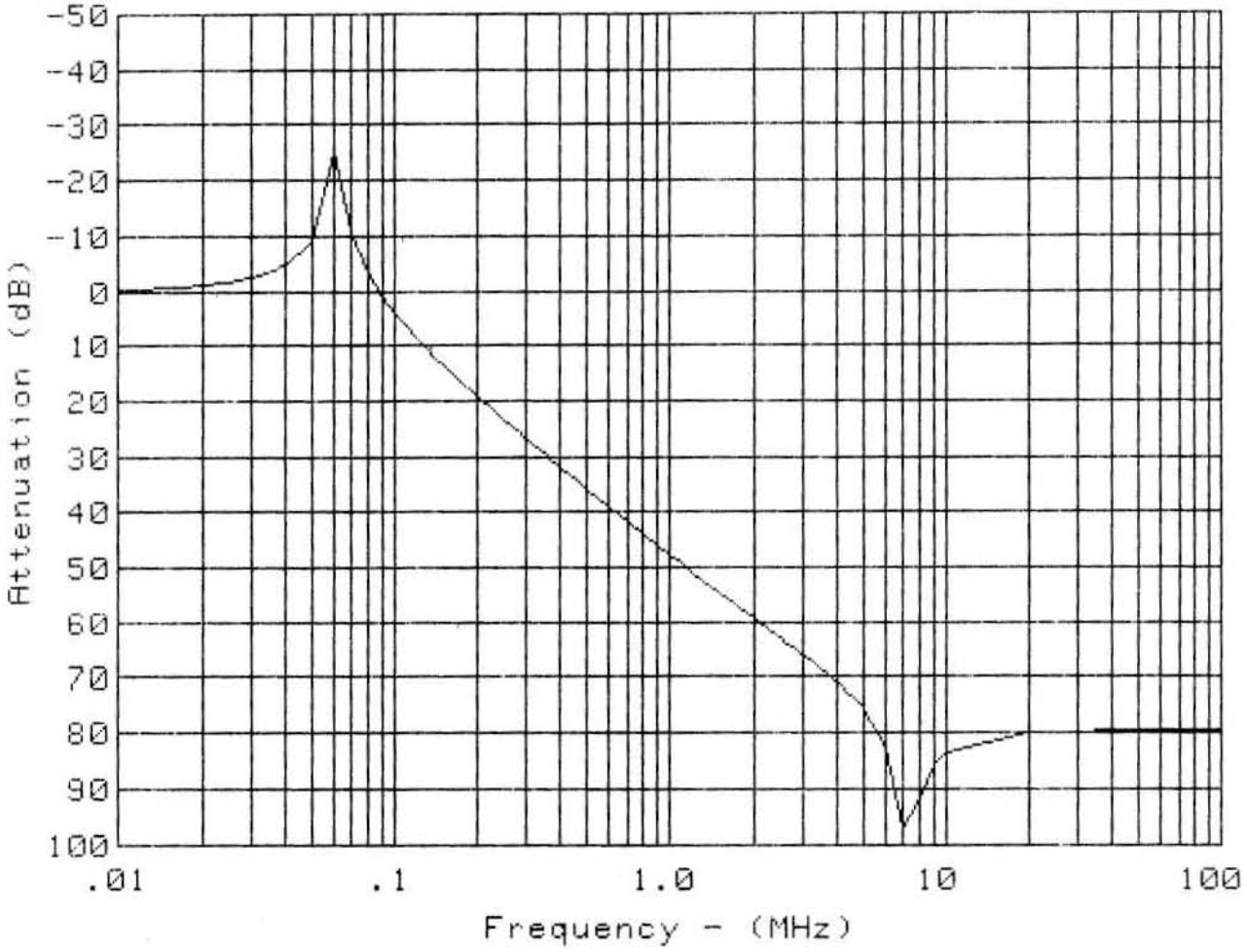

MC2871 Filter

OUTPUT Open-circuited

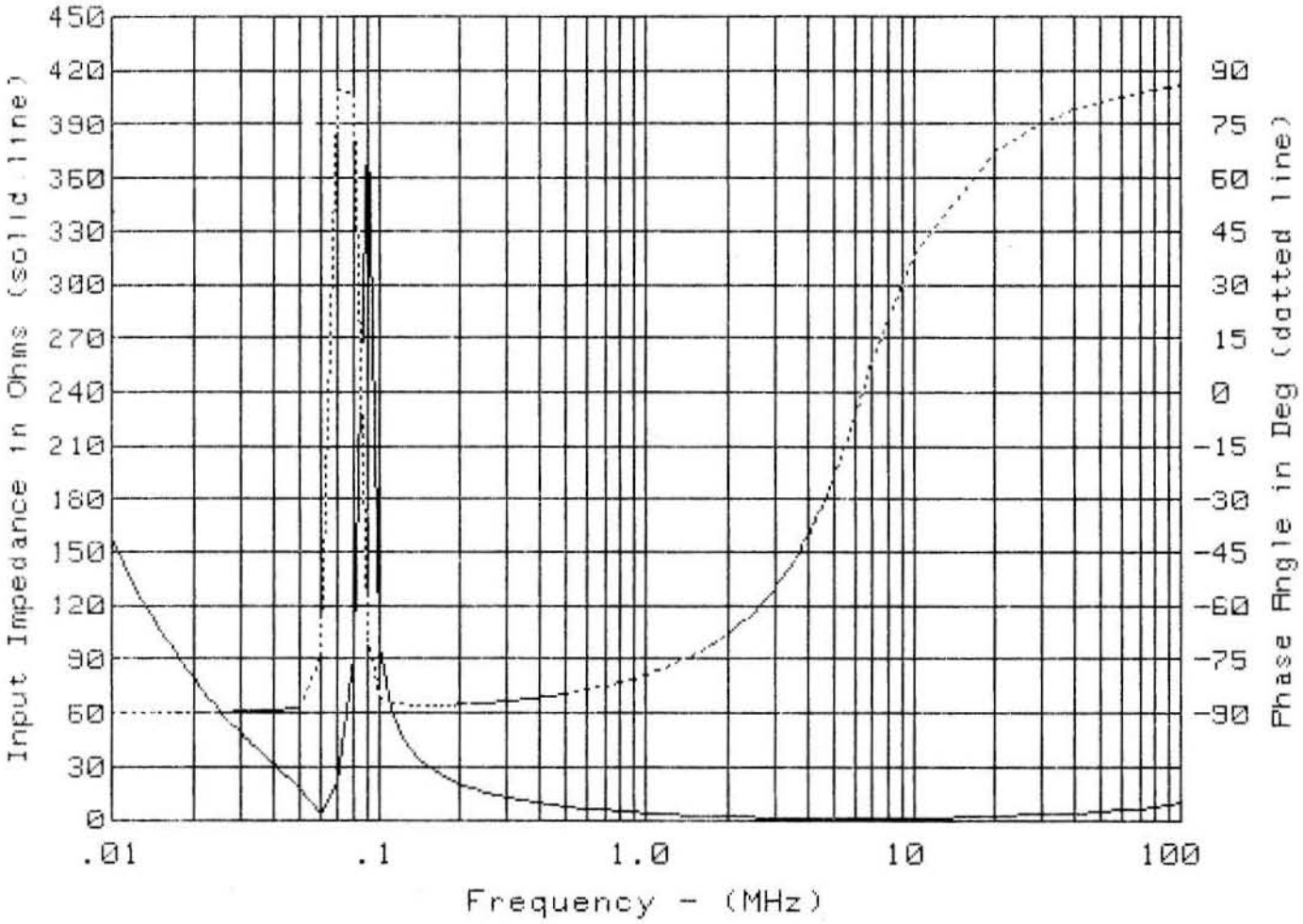

MC2867 Filter

OUTPUT Open-circuited

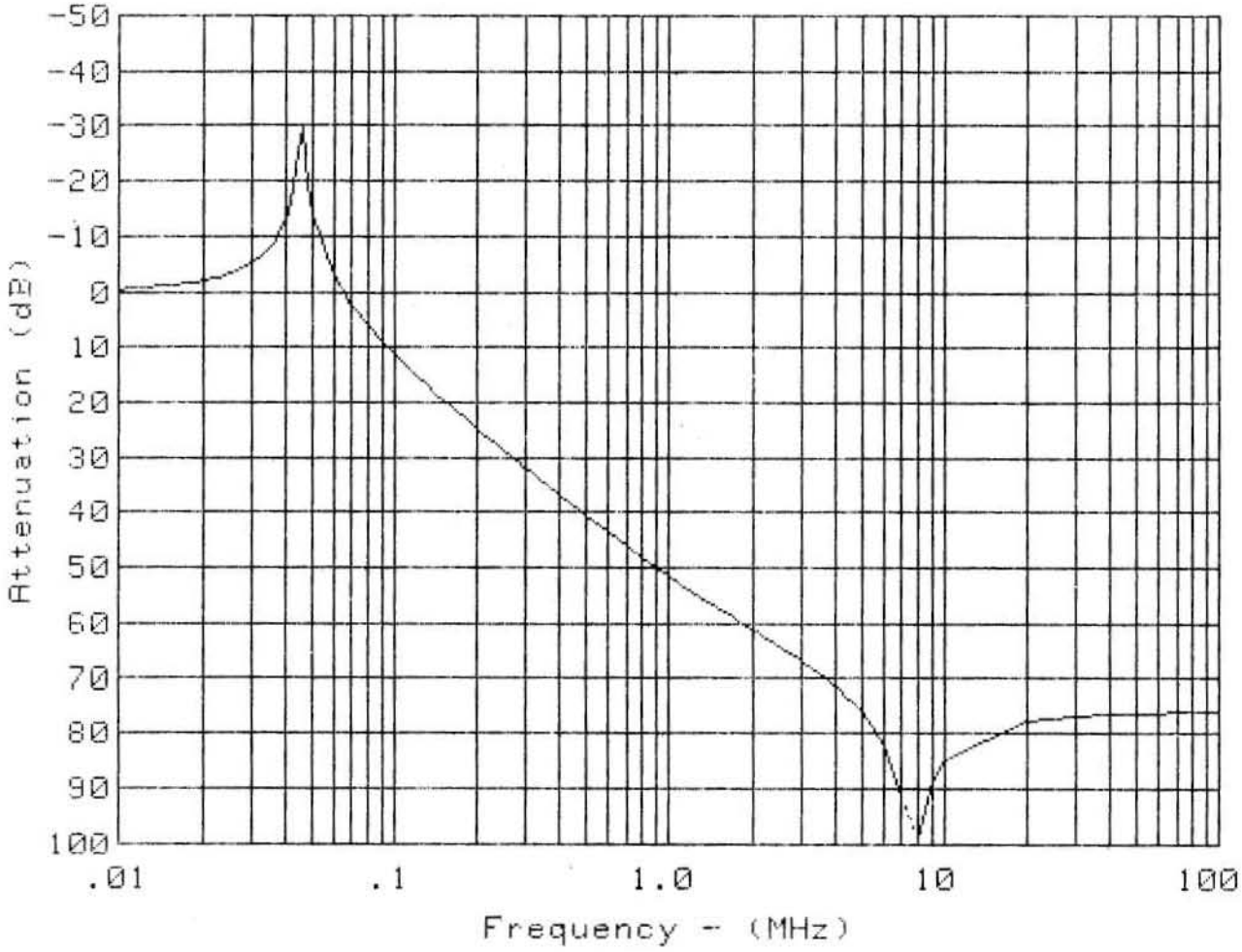

MC2867 Filter

OUTPUT Open-circuited

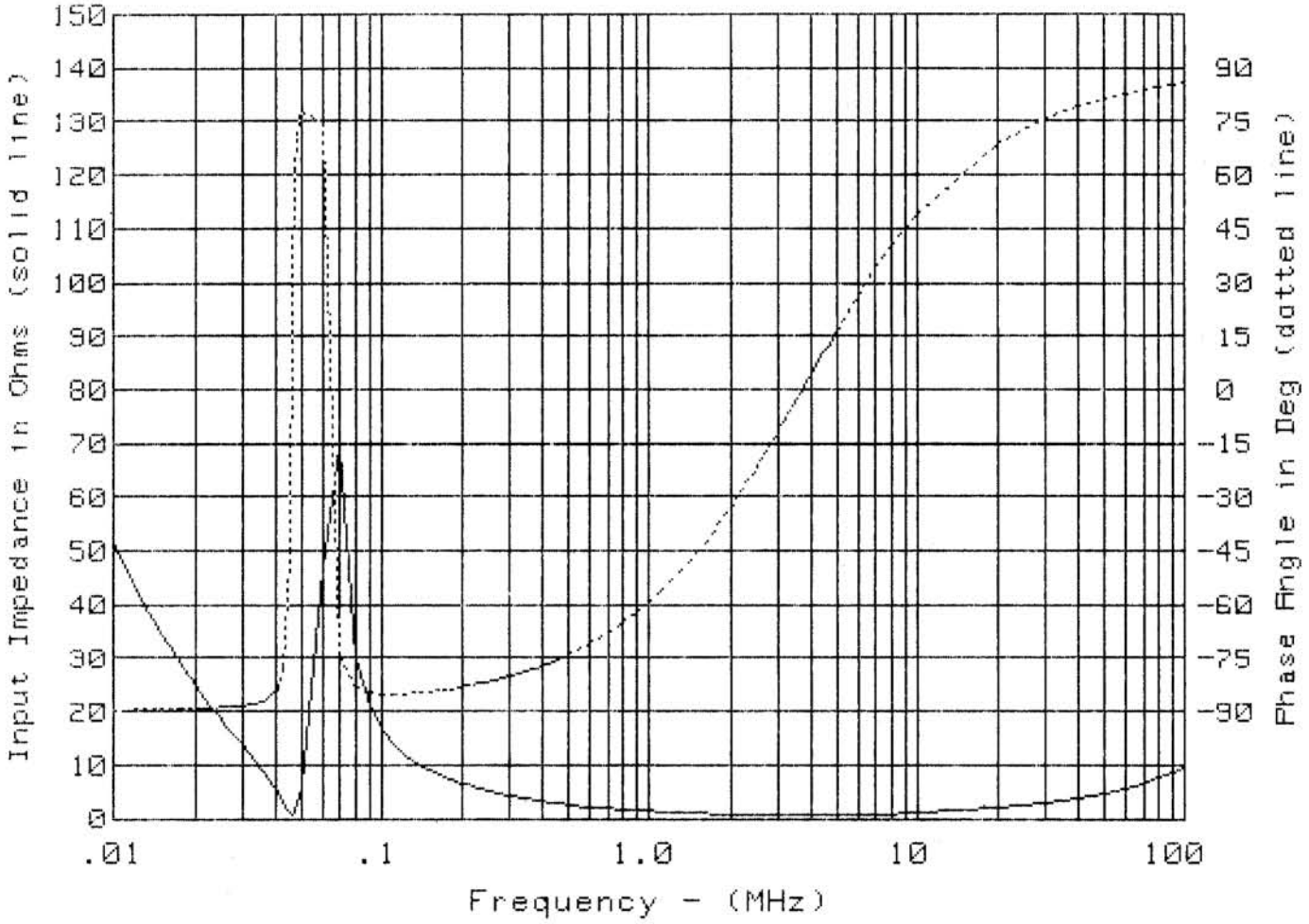

MC2868 Filter

OUTPUT Open-circuited

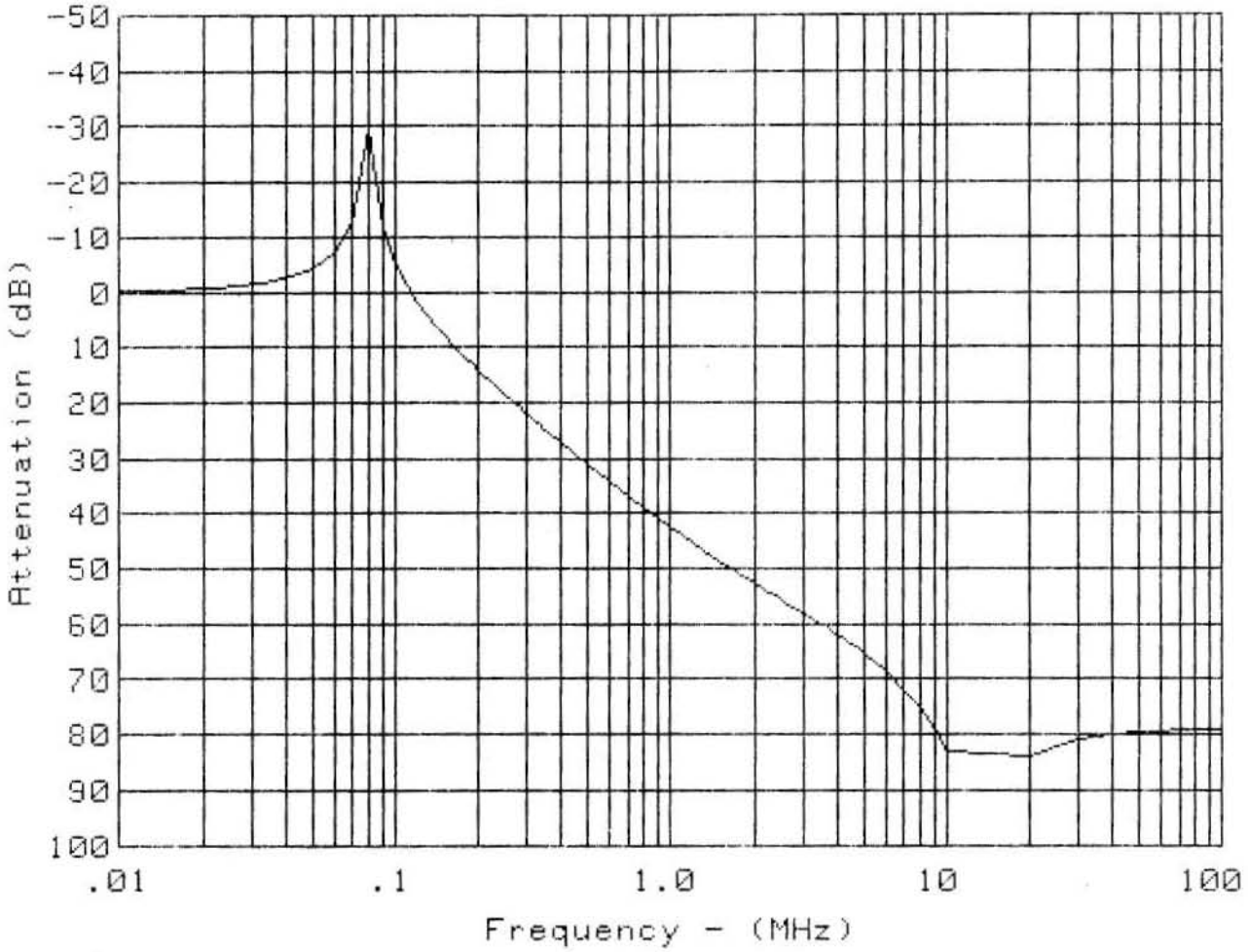

MC2868 Filter

OUTPUT Open-circuited

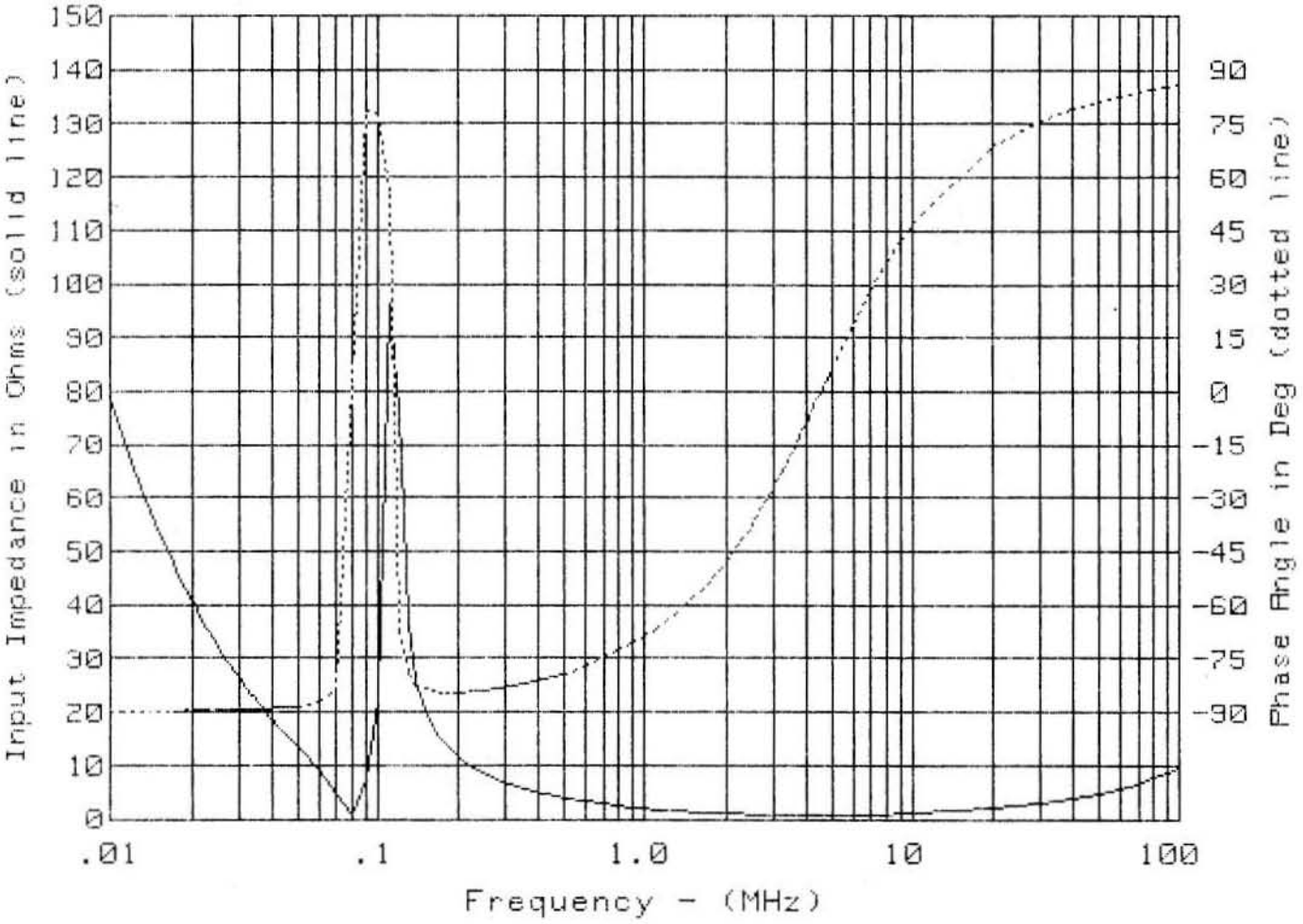

MC2944 Filter

OUTPUT Open-circuited

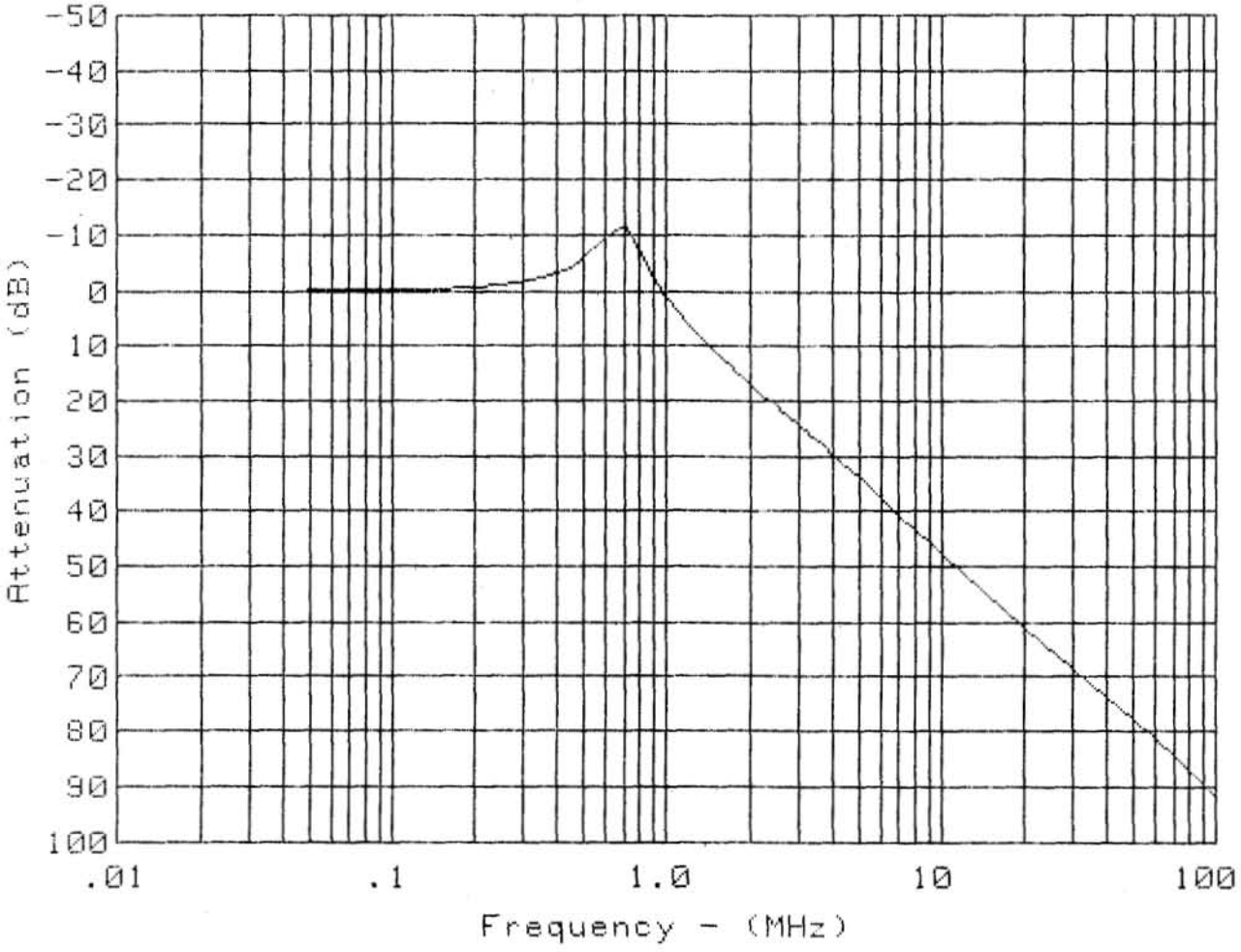

MC2944 Filter

OUTPUT Open-circuited

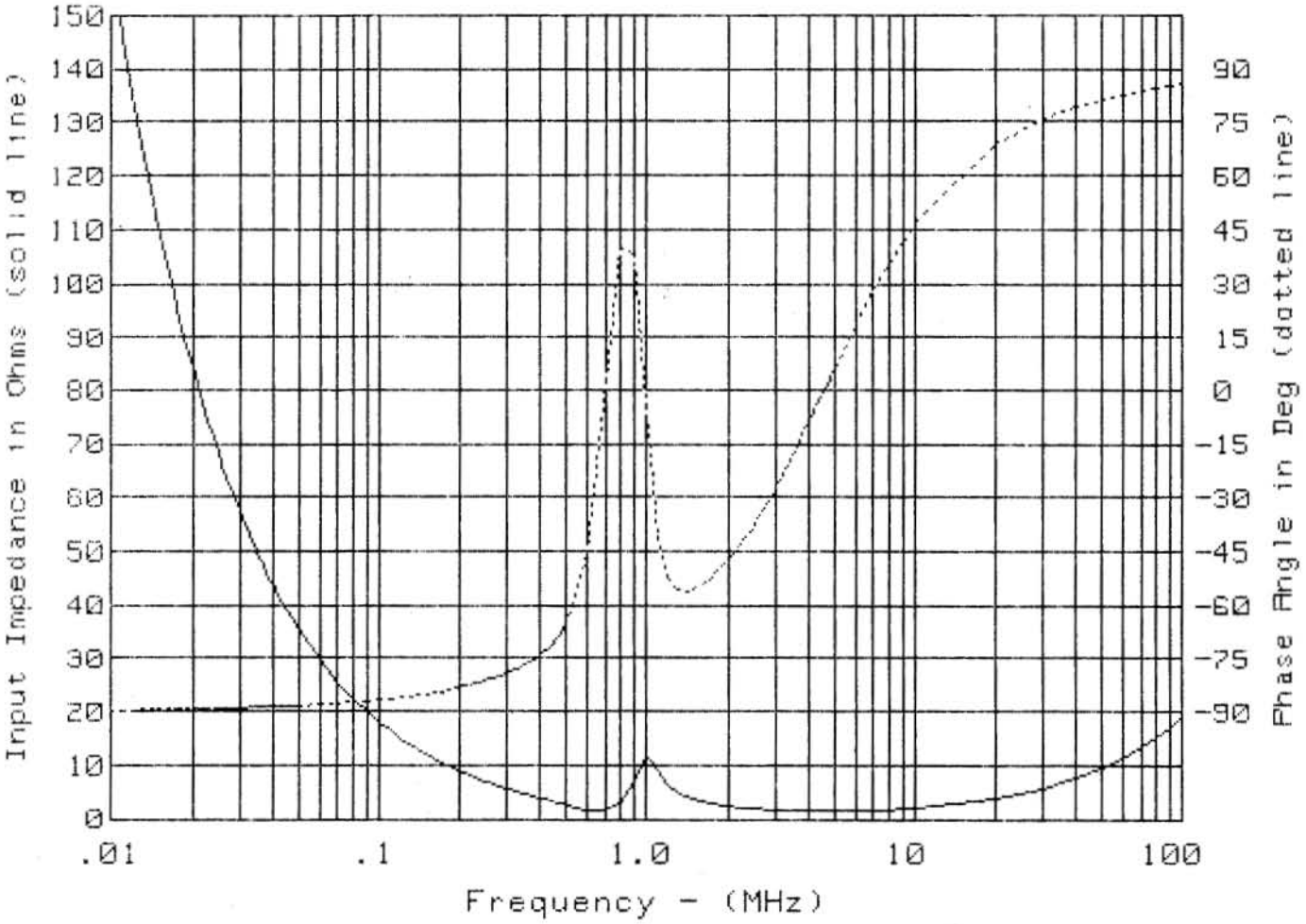

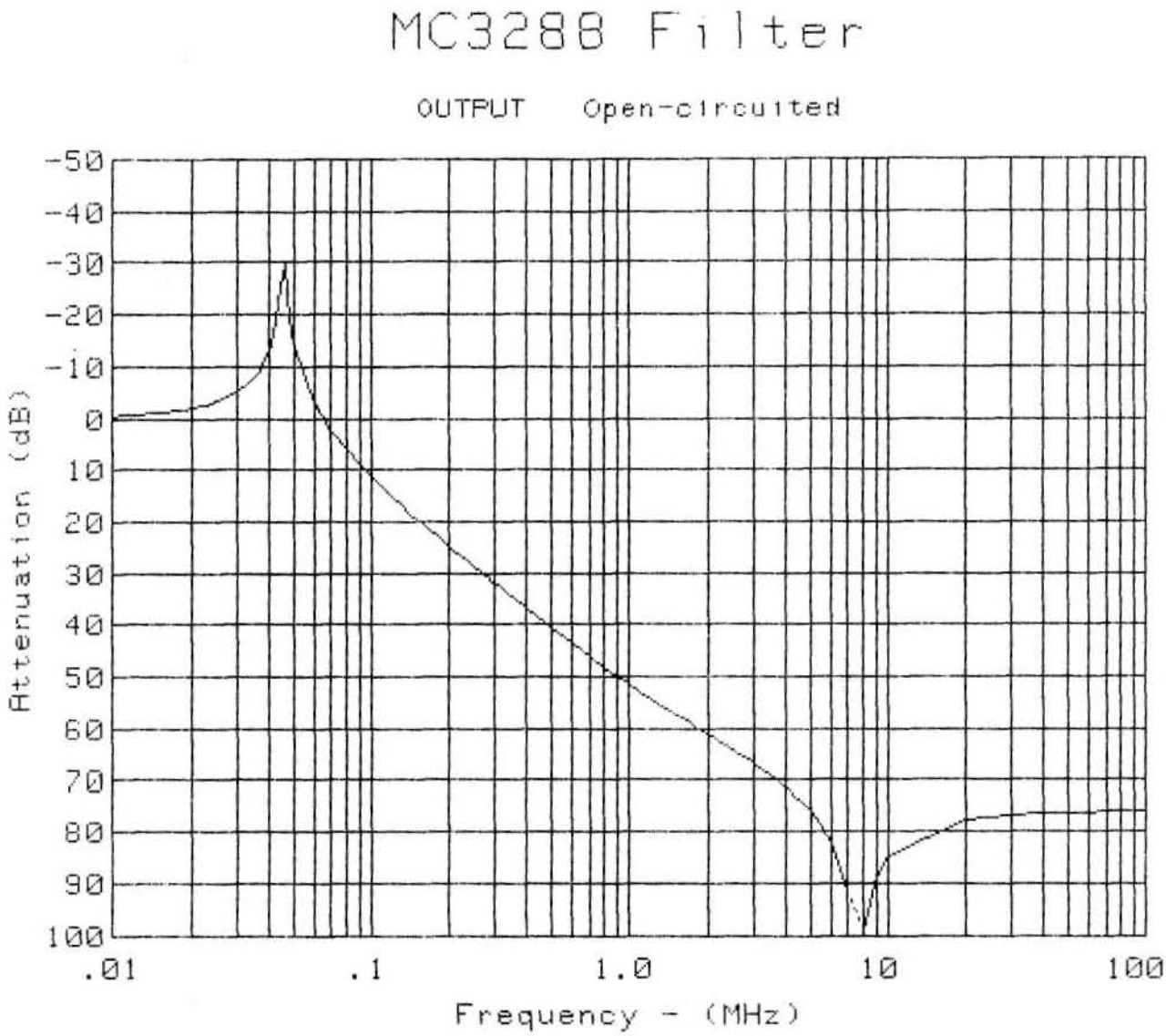
MC3288 Filter
OUTPUT Open-circuited
-50
-40
-30
-20
-10
0
10
20
30
40
50
60
70
80
90
100
Attenuation (dB)
.01
.1
1.0
10
100
Frequency - (MHz)

MC3288 Filter

OUTPUT Open-circuited

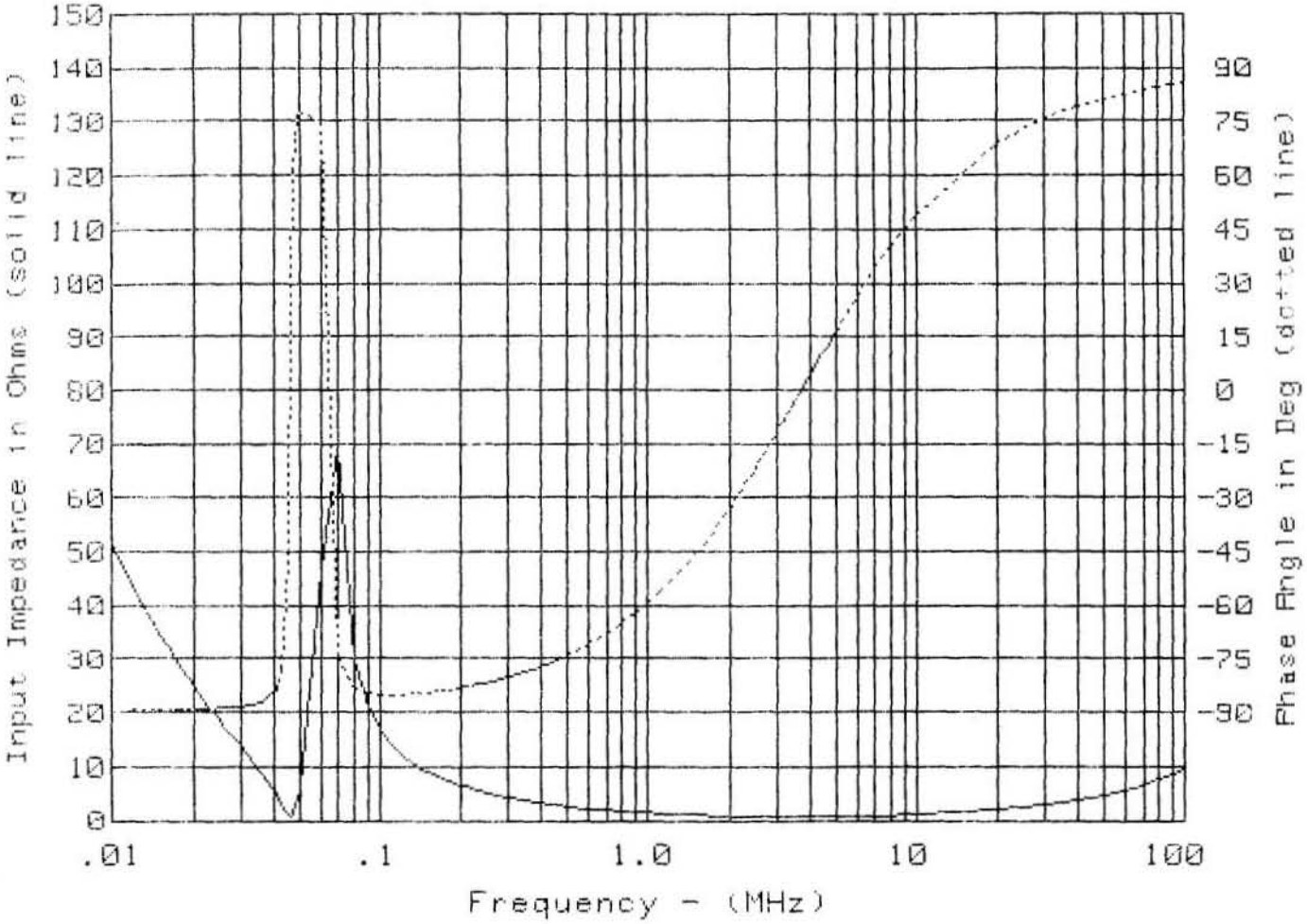

DISTRIBUTION:

2150 C. M. Tapp
2153 W. R. Nance
2153 C. P. Stanton (20)
2153 D. H. Weingarten
2154 E. D. Machin
2335 J. T. Love
2335 W. G. Merritt
2335 J. H. Stichman
2342 D. W. Arquette
2342 R. M. Oelsner
2541 D. J. Burns
2544 J. P. Ford
2544 L. D. Miller
2561 C. E. Spencer
7412 J. F. Calek
7412 K. J. Harrington
7412 C. F. Schroeder
7553 R. L. Parker
7554 J. C. Bushnell
9311 D. L. McCoy
9314 S. L. Jeffers
9315 R. W. Jorgensen
9315 H. E. Houts
9365 W. W. Wagoner
8153 C. Potthoff
8153 C. Skoog

8214 M. A. Pound
3141 L. J. Erickson (5)
3151 W. L. Garner (3)
(For DOE/TIC
DOE/TIC (25)
(C. Dalin, 3154-3)