SANDIA REPORT SAND81-1522 • Unlimited Release • UC-11
Printed April 1982

The Modular Airborne Remote Sampling and Sensing System (MARSSS)

Robert O. Woods

Prepared by
Sandia National Laboratories
Albuquerque, New Mexico 87185 and Livermore, California 94550
for the United States Department of Energy
under Contract DE-AC04-76DP00789

SF2900Q(8-81)

Issued by Sandia National Laboratories, operated for the United States Department of Energy by Sandia Corporation.

NOTICE: This report was prepared as an account of work sponsored by an agency of the United States Government. Neither the United States Government nor any agency thereof, nor any of their employees, nor any of their contractors, subcontractors, or their employees, makes any warranty, express or implied, or assumes any legal liability or responsibility for the accuracy, completeness, or usefulness of any information, apparatus, product, or process disclosed, or represents that its use would not infringe privately owned rights. Reference herein to any specific commercial product, process, or service by trade name, trademark, manufacturer, or otherwise, does not necessarily constitute or imply its endorsement, recommendation, or favoring by the United States Government, any agency thereof or any of their contractors or subcontractors. The views and opinions expressed herein do not necessarily state or reflect those of the United States Government, any agency thereof or any of their contractors or subcontractors.

Printed in the United States of America
Available from
National Technical Information Service
U.S. Department of Commerce
5285 Port Royal Road
Springfield, VA 22161

NTIS price codes
Printed copy: A02
Microfiche copy: A01

SAND81-1522

THE MODULAR AIRBORNE REMOTE SAMPLING AND SENSING SYSTEM (MARSSS)

R. O. Woods
Sandia National Laboratories
Albuquerque, NM 87185

ABSTRACT

Sandia is developing a modular airborne instrumentation system for the Environmental Protection Agency. This system will allow flexibility in the choice of instruments by standardizing mountings, power supplies and sampling modes. The objective is to make it possible to perform aerial surveys from chartered aircraft that have not been adapted in a more than superficial manner. It will also allow the experimenter to tailor his choice of instruments to the specific problem. Since the equipment will have a stand-alone capability, it can be applied to other problems such as long-term unattended use at remote locations or in toxic or otherwise hazardous environments.

*Presented at APCA Specialty Conference on: In-Situ Air Quality Monitoring from Moving Platforms, San Diego, CA, January 18-21, 1982.

CONTENTS

	Page
Introduction	7
Standardization	13
Aircraft Interface	14
Data Acquisition and Control System	17
Prototype System Components	19

FIGURES

1	System Components	9
2	Applications	10
3	Aircraft Installations	16
4	Computer Systems	18

TABLE

1	System Components	20

INTRODUCTION

The objective of the program described here is to produce an instrument system that is man-portable, self-contained, and capable of being installed in chartered aircraft that have not been especially modified for the installation. An important part of the effort will be to repackage all equipment in such a way that the instruments can be permuted at the discretion of the experimenter. This will entail standardizing package geometries and electrical characteristics such as power supply voltages and data/command bus formats.

Our effort has been motivated by the need to reduce the cost of making airborne surveys. As it is done today, this often involves making the semi-permanent installation of instruments in aircraft which are then largely committed to the application. This is expensive not only because of the need to render the installation airworthy and in conformance with FAA regulations, but also because it frequently involves tieing up expensive aircraft and, in some cases, keeping them idle while waiting for meteorological or other conditions to become favorable to the projected experiment. Response to unexpected events such as volcanic eruptions takes place on an ad hoc basis because it is not practical to maintain a fleet of instrumented aircraft whose only use would be to respond to unforeseen events.

One scenario that we envision for the use of the MARSSS would be for an experimenter to tailor a selection of instruments for a site-specific survey, travel to the scene by commercial airline (with the instruments being shipped as baggage), then

perform the necessary experiments using an airplane chartered from a local operator. This implies that the system will be designed for use in a readily available type of aircraft and that installation will involve no more than a few hours of work by an aircraft mechanic.

The fact that packages will be standardized in the interest of allowing easy interfacing of the instruments will have beneficial side effects similar to those following from the wide adoption of nuclear instrumentation module (NIM) standards for nuclear instrumentation. (In fact, we plan to use NIM components--such as power supplies--wherever possible.)

The overall system is shown (in concept only) in Figure 1. It should be stressed that this serves to identify the components of the system and does not represent a realistic geometry. In addition to the sensors themselves, the assembly will include a microcomputer for data logging and instrument control as well as for driving a remote display. It will also allow a selection of several different power supplies, a local display to be used for calibration and checkout, navigational equipment, pumping, and a separable calibration system. The sensor modules are sketched in a way that stresses the fact that they can be "stacked" in any permutation at the option of the experimenter.

Since the very nature of the system is such that it will be readily portable and capable, if needed, of operating in an interactive mode but without the operator actually touching the equipment, it will readily lend itself to applications other than airborne ones. Figure 2, also highly schematic, shows some of these.

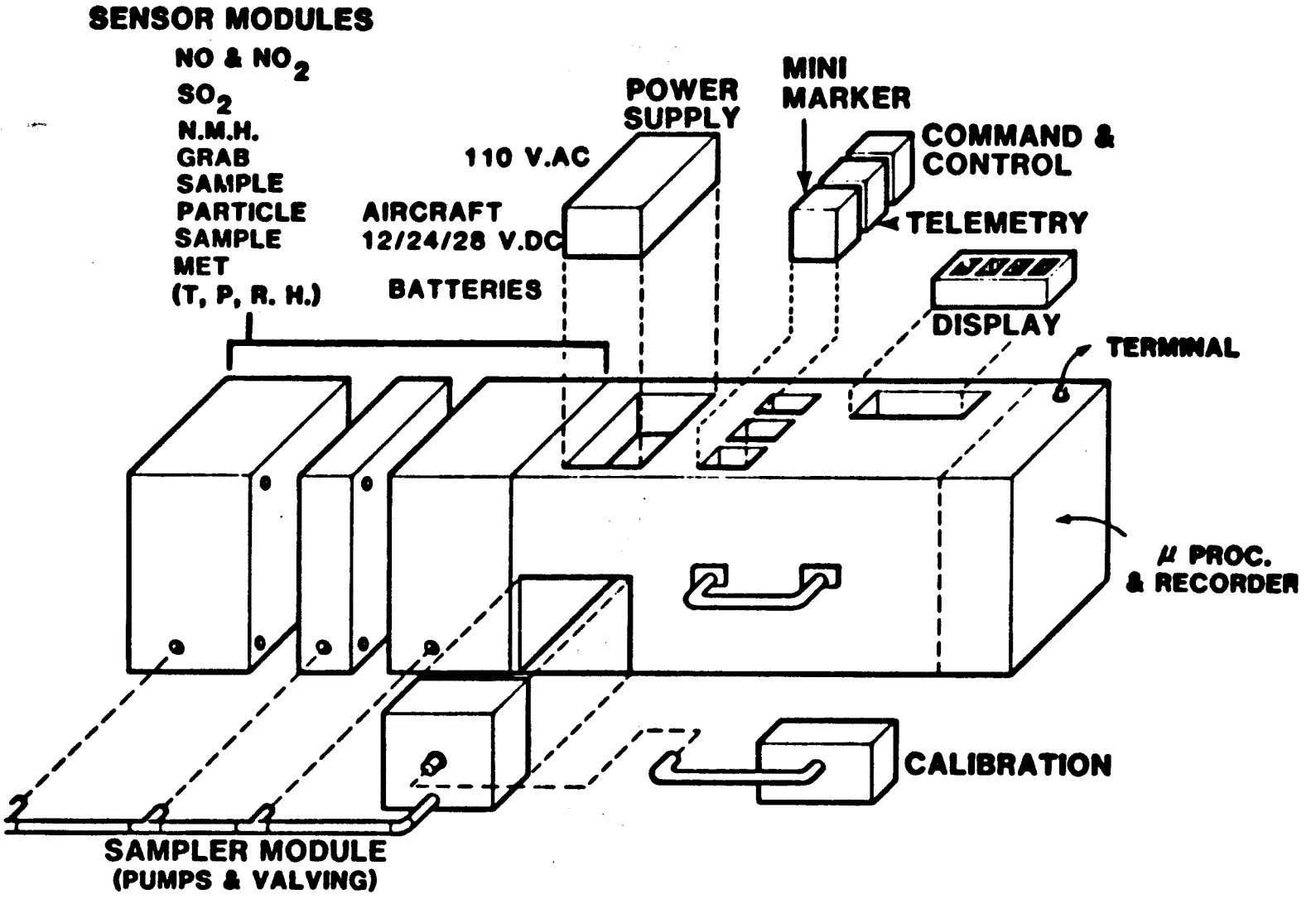

Figure 1. System Components

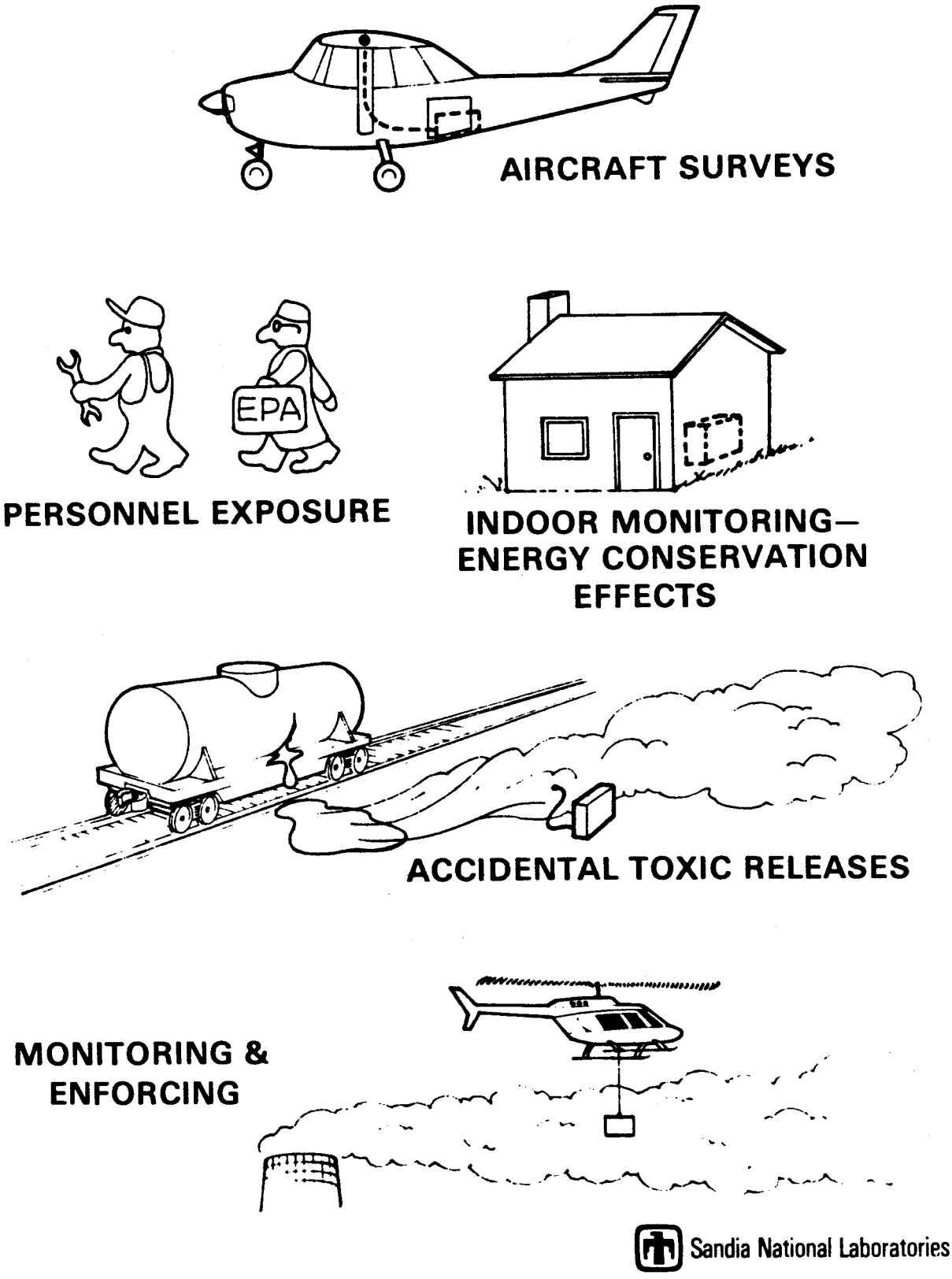

Figure 2. Applications

The cartoon shows, among other things, use of the system to monitor the exposure to different environments of a worker who moves about within, say, a chemical processing plant. In such an application, pollutant concentrations are measured as more than point functions. Varying exposures that might involve synergistic effects are measured on the worker's actual track and for realistic times. In this application a remote capability is not needed, but a portable--and to some degree ruggedized--instrument system is required. It seems likely that the equipment will be transported on a dolly, rather than carried as shown in this fanciful sketch.

Another application that will require little reconfiguring from the airborne is that of long-term monitoring of indoor air quality. The only change in support equipment needed here is the replacement of the battery power supply with an AC interface. The system's ability to function without operator attention will allow it to be emplaced in a residence or other structure and to monitor changes in air quality, e.g., the accumulation of solvent vapors, combustion products, and naturally occurring species such as Radon. Great interest is currently being expressed in these effects as they are brought about by energy conservation measures.

The monitoring of accidental toxic releases can be performed more safely than is currently possible by allowing an investigator (equipped with life support equipment if necessary) to emplace the equipment near the source and then leave. Vans intended for such applications exist, but they require an on-board crew who must remain exposed to the harmful environment.

That the system will be easily transportable and hence easily made avilable for loan, and the fact that it will be capable of operating with a minimum of bias caused by the technique of individual operators, will render it suitable for monitoring and enforcing applications. A relatively few systems, if strategically deployed, could be made available on short notice anywhere in the country. Since externally controlled functions such as zero adjustments, checking of span, and range selection will be automated rather than depending on the technique of the experimenter, results will be more reproducible. This will be true not only between one instrument and another but also for the same instrument in the hands of different operators. This will make the data more directly comparable when taken at one site and then at another. It will also provide greater credibility in cases where this is cause, perhaps legal, to closely scrutinize the reliability of data.

This program will be open-ended in that there is no restriction in the choice of instruments that can be incorporated. At present there is no intention to develop new instrumental techniques; rather, commercially available instruments will be repackaged and modified. An effort will be made to interest manufacturers in producing their instruments in standardized, readily interchangeable packages. It has been visualized that an important part of the program will be an attempt to commercialize the results.

STANDARDIZATION

As noted in the discussion of Figure 1, packaging will be done in such a way that instruments can be mechanically interfaced at the choice of the experimenter and without restriction on their selection. This has been sketched as a series of packages of uniform cross-section but differing widths. The ultimate configuration will be a little more complex than this. It would be highly desirable to use a tightly standardized geometry like the widely used "NIM Bin"; whether this will be possible remains to be seen.

In addition to a stacking capability, the ideal geometry would be capable of air shipment without additional packing. Since any successful instrument will have already been adapted to the flight environment, this requirement may be achieved in practice without great additional effort. It is also intended that components--if not the entire assembly--will be light and compact enough to allow them to be handled by one person.

One strict ground rule is that the completed assembly will be capable of being installed in the luggage or cargo compartment of a small airplane without structural modifications to the airframe. This implies that the assembled package will have sufficient structural integrity to allow it to be tied down with conventional cargo straps in an unprepared volume. In addition, any shock mounting will be internal to the packages or furnished as separate modules.

Electrical standardization will be straightforward. We will use a standard format for communication between the microcomputer and instruments, and between the microcomputer and a remote terminal. Such a terminal will be located within reach of the experimenter while the instruments themselves may not be accessible in flight. Data will be processed using software that allows the experimenter wide latitude in the choice of such parameters as real-time display format. Use of a data terminal will also allow operation in an interactive mode wherein such things as sample rates, scale factors and data display are adjusted as the experiment progresses.

AIRCRAFT INTERFACE

FAA licensing requirements are restrictive enough to have dictated that no significant part of the system will be mounted on the outside of an airplane. For practical purposes, the most we can visualize is a sample inlet tube extending outside the envelope of the airframe. Location is dictated by the fact that air sampling must be done in a region that is not subject to contamination by fuel vapor, engine fumes, products scrubbed from the surfaces by airflow, or exhaust products. For sampling particles it is additionally desirable that the sampled airflow be outside the prop wash. This limits us to mounting sample inlets on the wings of single-engined aircraft at a significant distance from the fuselage or in the nose of a twin. Both possibilties have been explored. Earlier work by NASA favors use of the nose

compartment of a twin-engined Cessna 402. With such an installation, one can visualize mounting the inlets on a standard or replicated copy of a door or access panel. Replacing an existing component with such a modification could be done by a certified mechanic in a short time. An attractive, but expensive, alternative would be to replace the entire nose cone with one having an inlet in the stagnation region.

Single-engined aircraft installations have been considered for the ubiquitous Cessna 172 as well as for the slightly larger and more powerful 182. The internal geometry of the wing as well as a fortuitous arrangement of cabin ventilating ducts and inspection ports favors the 182. This aircraft is also probably more widely available for charter operations, being more of a "workhorse" than a means of personal transportation. Since the Cessna 182 has a convenient arrangement of inspection ports in the outboard part of the wing, we plan to develop an inlet assembly that can replace an inspection port cover. A sample line will be run in--or in place of--one of the existing ventilation ducts. This line can easily be routed to the luggage compartment aft of the rear seats and will be accessible by removing a single wing root fairing.

Figure 3 shows the installation options. Both Cessna 402 and 182 are sketched. For both, inlets will be mounted outside the boundary layer. In the case of experiments that involve a large number of sensors, the 402 will be preferable--even independent of other considerations--because of its greater payload capacity. (The 402 has an allowable load of over 500 pounds in the nose

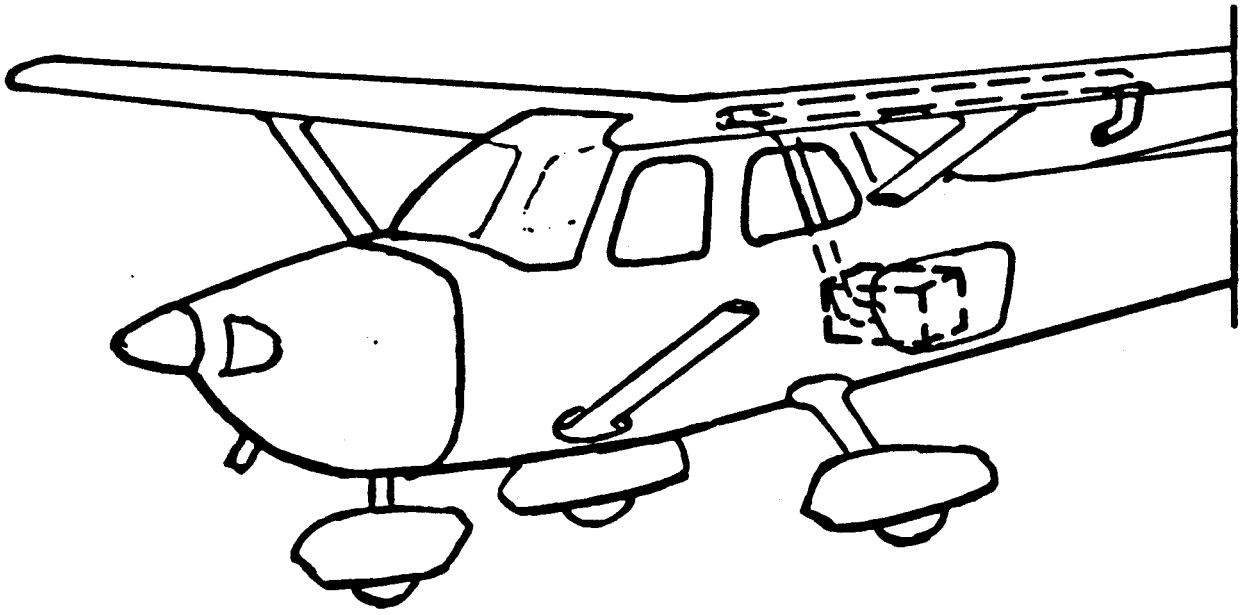

C182 Installation

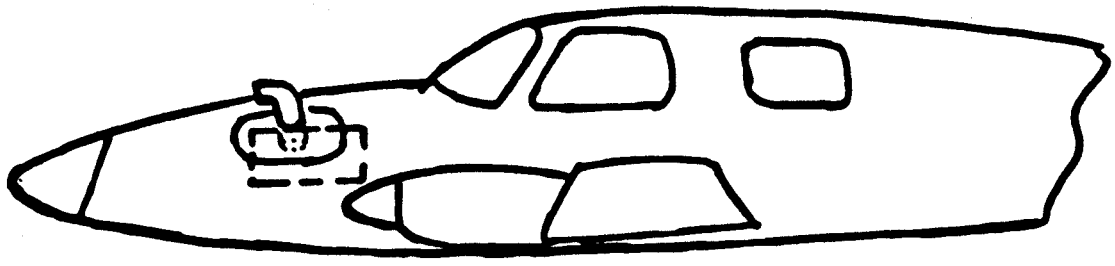

C402 Installation

Figure 3. Aircraft Installations

section. The maximum weight allowed in the baggage area of a 182 is 200 pounds.)

DATA ACQUISITION AND CONTROL SYSTEM

Figure 4 shows the overall control system. The central processing unit is a commercial microcomputer. This is a ruggedized and environmentally qualified version of a desktop computer--without most of the peripheral equipment other than a tape transport. Being totally compatible, this can be programmed using software developed on the desktop version. The functioning programs can either be entered from tape--using the integral tape transport that will also be used for data logging or, preferably, stored in PROMs.

For our application it is necessary that the microcomputer system be able to communicate with the sensors via a bus that carries command signals as well as data. The IEEE 488 format has already received wide industry acceptance for such applications; in fact, several of the instruments that had already been selected for their other features offer an IEEE 488 port as an inexpensive option. These interface directly with the microcomputer, which also has an IEEE 488 port. With the current avalanche of interest in the application of microprocessors to the control of laboratory equipment, we can be sure that an ever-increasing selection of instruments will become available that can be readily interfaced with data logging and control systems. Should other bus formats

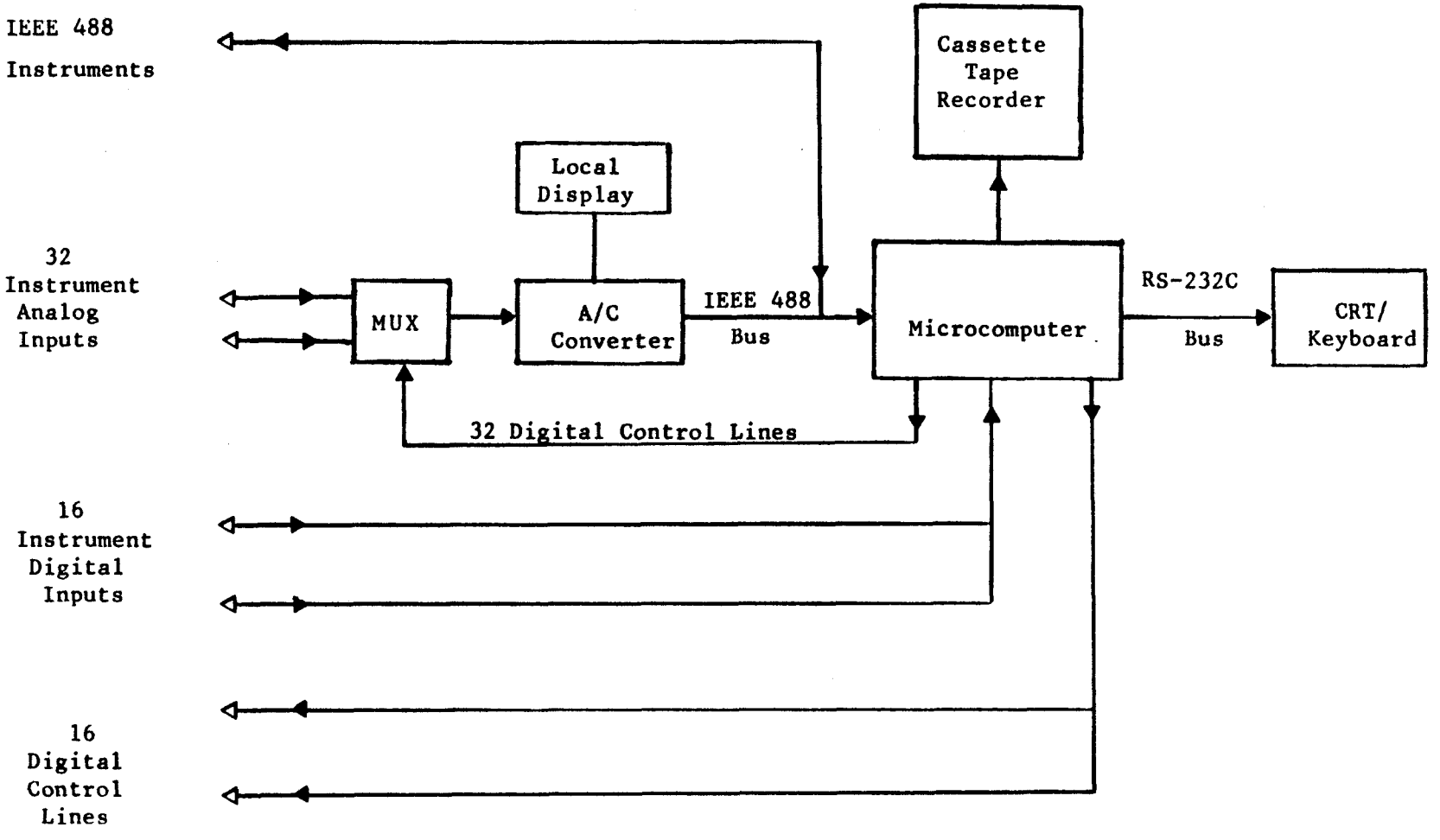

Figure 4. Computer System

begin to compete, adapating our system to their use will be at most a software development problem.

Another requirement that is equally easy to satisfy is that of driving and communicating with a remote terminal. The RS-232C (serial) format has become almost universal for this application. A wide assortment of terminals and displays are available with this format at a nominal price. The chosen computer not only has an appropriate port, it has the inherent capability of driving a long transmission line.

PROTOTYPE SYSTEM COMPONENTS

The major commercial components of the prototype system are listed in Table 1, which also gives relevant information concerning cost and physical characteristics. Weights and sizes apply to the equipment as it is commercially furnished. A major part of our effort will be in repackaging and in eliminating unnecessary weights such as AC power supplies.

The Environmental Research Division of Sandia National Laboratories has supported the development of radio navigational equipment that may be incorporated into the flight system at a later date. At present we have a working system based upon commercial aircraft Distance Measuring Equipment (DME). This uses a microprocessor to cycle a DME through a list of FAA navigational ground stations and Sandia-owned stations that can be positioned near the source being investigated. In the first flight application, position data were put into the RS-232C format

TABLE 1

SYSTEM COMPONENTS

ITEM	WEIGHT(lbs)	DIMENSIONS(in.)	COST(1/1/1982)
Microcomputer	10	6x8x18	$2500
Interface	7	8x3½x7	1100
Display	5	n/a	300
Keyboard	3	n/a	400
O_3 Instrument	35	17x9x23	6000
CO Instrument	45	17x9x23	7000
NO_x Instrument	20	7x8x18	6000
Pump	3	n/a	300
Power Supply	n/a	n/a	n/a
Grab Sampler	5	n/a	n/a
Particle Sampler	2	n/a	n/a

and put on a bus connected to the microcomputer of a helicopter-borne experiment. The data were then telemetered in real time to the ground. In the MARSSS application, data would similarly be transmitted by hard wire to the microcomputer and then either recorded on tape or reformatted for telemetry.

A second navigational system that is currently under in-house development at Sandia is the "Minimarker" touched on in Figure 1. This is a small, low-cost ranging system intended for throw-away use in very small marker balloons. This equipment, too, is adaptable to the present problem although its capabilities are limited when compared to the DME system.

DISTRIBUTION:

David S. Ballantine
Pollutant Characterization and
Safety Research Division/EV-35
Office of Health and
Environmental Research
Mail Stop E-201, Germantown
U. S. Department of Energy
Washington, DC 20545

A. J. Alkezweeny
Pacific Northwest Laboratory
P. O. Box 999
Richland, WA 99352

Sumner Barr
Los Alamos National Laboratory
G-8, MS-588
P. O. Box 1663
Los Alamos, NM 87544

C. E. Decker
Research Triangle Institute
P. O. BOx 12194
Research Triangle Park, NC 27709

Dr. Russell Dietz
Environmental Chemistry Division
Bldg. 426
Brookhaven National Laboratory
Upton, NY 11973

R. Evans
Environmental Monitoring and
Support Laboratory
U. S. Environmental Protection
Agency
P. O. Box 15027
Las Vegas, NV 89114

R. Garber
Air Quality Branch
Tennessee Valley Authority
Sheffield, AL 35660

N. Gillani
Mechanical Engineering Department
Washington University
St. Louis, MO 63130

Paul H. Gudiksen
Lawrence Livermore National Laboratory
University of California
P. O. Box 808
Livermore, CA 94550

N. Hester
Environmental Monitoring and
Support Laboratory
U. S. Environmental Protection Agency
P. O. Box 15027
Las Vegas, NV 89114

Dr. Frank Hudson
Office of Health & Environmental
Research
Department of Energy
Mail Stop E-201
Washington, DC 20545

R. Husar
Mechanical Engineering Department
Washington University
St. Louis, MO 63130

L. Newman
Brookhaven National Laboratory
B426, 51 Bell Avenue
Upton, NY 11973

R. Pueschel
Environmental Research Laboratory
National Oceanic & Atmospheric
Administration
Boulder, CO 80302

W. E. Wilson, Jr.
U. S. Environmental Protection Agency
Research Triangle Park, NC 27711

4700 E. H. Beckner
4770 G. E. Brandvold
4774 B. D. Zak (25)
4774 H. W. Church
4774 A. L. Jensen
4774 R. O. Woods (5)
8266 E. A. Aas
3141 L. J. Erickson (5)
3151 W. L. Garner (3)
3154-3 C. H. Dalin
(for DOE/TIC)(25)