SAND81-1079
Unlimited Release

RECOVERY OF SEISMIC SIGNALS IN NOISE BY ADAPTIVE PROCESSING

Glenn R. Elliott

Sandia National Laboratories

F 2900 Q(3-80)

Issued by Sandia Laboratories, operated for the United States Department of Energy by Sandia Corporation.

NOTICE

This report was prepared as an account of work sponsored by the United States Government. Neither the United States nor the Department of Energy, nor any of their employees, nor any of their contractors, subcontractors, or their employees, makes any warranty, express or implied, or assumes any legal liability or responsibility for the accuracy, completeness or usefulness of any information, apparatus, product or process disclosed, or represents that its use would not infringe privately owned rights.

SF 1004-DF(11-77)

RECOVERY OF SEISMIC SIGNALS IN NOISE BY ADAPTIVE PROCESSING

Glenn R. Elliott
Sandia National Laboratories
Albuquerque, New Mexico 87185

ABSTRACT

This paper describes techniques for use in improving the signal-to-noise ratio of electrical signals buried in noise from seismic sensors. Often not enough information is available about the characteristics of either the signal or the noise to permit the use of more classical detection methods, i.e., matched filtering, likelihood detectors, array averaging, etc. Adaptive processing can be of benefit in these cases. Examples of Sandia's work in improved performance of perimeter intrusion detection systems is presented.

RECOVERY OF SEISMIC SIGNALS IN NOISE BY ADAPTIVE PROCESSING*

Glenn R. Elliott

Sandia National Laboratories
Albuquerque, New Mexico 87185

Abstract

This paper describes techniques for use in improving the signal-to-noise ratio of electrical signals buried in noise from seismic sensors. Often not enough information is available about the characteristics of either the signal or the noise to permit the use of more classical detection methods, i.e., matched filtering, likelihood detectors, array averaging, etc. Adaptive processing can be of benefit in these cases. Examples of Sandia's work in improved performance of perimeter intrusion detection systems is presented.

Introduction

Frequently in seismic measurements, the desired signal is heavily corrupted with various types of seismic or electric/magnetic noise. Many techniques are available to the experimenter/engineer to remove the effects of the noise. Most of these use relatively large arrays employing several sensors. This paper deals with methods of data processing for the enhancement of signal-to-noise ratios (SNR) or for event detection using data from one, or at most, two seismic sensors. Most of the information presented stems from work at Sandia National Laboratories with perimeter intrusion detection devices used in security systems. We have worked extensively with a buried line sensor which responds to magnetic and seismic disturbances and with commercially available broadband geophones. While a substantial part of this effort involves the detection of singular events such as the human footstep with an attendant low false alarm rate, the basic approach used could possibly be applied to other fields as well.

The intrusion detection problem is illustrated in Figure 1 where high-valued items are protected first by a secure fence and then by anti-intrusion sensors; in this case buried line sensors. Usually inside the protected area guards are posted to evaluate the alarms and respond to the intruder, if necessary. Almost always there are numerous sources of seismic and electro/mechanical noise such as roads, trains, heavy equipment, and power lines which can create responses in the sensors which completely mask the intruder signal. Hence, the problem becomes one of detecting a signal buried in noise.

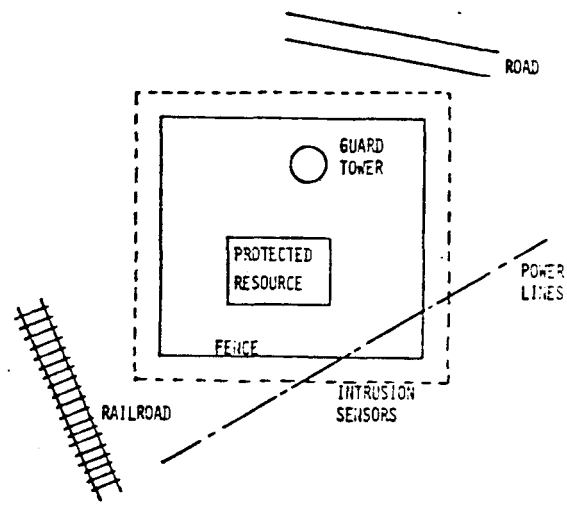

FIGURE 1
A REPRESENTATION OF THE INTRUSION DETECTION PROBLEM

The Adaptive Approach

Early in our project, we were faced with a problem in trying to characterize the noise and intruder-generated signal. If sufficient description of both noise and signal could be obtained, then there are a number of classic methods of removing the noise from the signal which produce excellent results, e.g., matched filtering or pattern recognition. Most noise, however, if not broadband was at best narrow band with an undefinable center frequency which varied from location to location and under different soil conditions. Intruder signals are generally broadband transients which cannot be

*This work was supported and funded by the Physical Security Systems Directorate, Electronic Systems Divison of the Air Force Systems Command, Hanscom Air Force Base, MA 01731.

characterized either. Some off line, after the fact conventional processing procedures come to mind; however none of these were suitable in our real time, on-line processing environment. The only outcome from our signal characterization study was that the noise had more of the statistical parameter of stationarity than the intruder signal. Actually, the noise could not be considered stationary in any sense over the long term at all; but, does exhibit some of the short-sense stationary properties. The adaptive digital filter capitalizes on such differences to improve SNR and decorrelate the stationary components of the noise response. These processes, generally attributed in their modern form to Prof. B. Widrow of Stanford University and others[1], are illustrated in Figure 2.

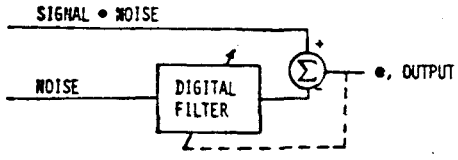

FIGURE 2A.
TWO INPUT ADAPTIVE DIGITAL FILTER

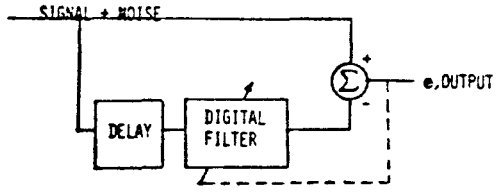

FIGURE 2B.
ADAPTIVE DIGITAL PREDICTOR (ADP)

Figure 2a shows a two-input system where signal plus noise is fed to one input while a source of correlated noise is available at the second input. This configuraton can be especially useful if there are two sensors available, the signal source is much closer to one, and the noise source is distant to both. This has proven to be quite useful for intrusion detection systems where the seismic sensor can be considered as a single point receiver. We have used this configuration quite successfully even when the two sensors are of completely different types. For example, a microphone (noise input)/ geophone (signal plus noise) combination can be used to significantly reduce noise effects generated from low flying airplanes. For the typical buried cable sensor employed in intrusion systems, however, the performance of the two-input version is poor. The responses of both cables are essentially uncorrelated, probably due to the distributed nature of the sensor. Figure 2b illustrates the single input Adaptive Digital Predictor (ADP) which reduces the effect of stationary components in the input. As the name implies, by looking at the incoming signal continuously, the system predicts the future output. It is this ADP which we have widely used in our intrusion detection work, and in the remainder of the paper we will concentrate primarily on it. A basic understanding of the ADP suffices also to be able to work successfully with two-input systems.

Several different forms of the ADP are available now along with several processing algorithms. We will discuss some of these in the rest of the paper. Regardless of form or mathematical process, all generally follow similar principles. The filter itself has an adjustable transfer function accomplished by using variable weights. These weights are adjusted by an algorithm which attempts to minimize the square of the expected value of the output or error signal, e in Figure 2. This is accomplished by expressing $E|e^2|$, the expected value of the square in terms of the filter weights, taking the partial derivative with respect to each weight, setting those equal to zero, and solving the resulting simultaneous differential equations for the weights. Several different methods are available for solving the equations. The most popular involves expressing the error surface in a multi-dimensional weight space; and then solving for the weights that yield the minimum error, using a steepest decent method. Although the derivation can get rather involved with vector and matrix algebra, the resulting computational algorithms are relatively simple and implementable on present microcomputers. In the next section, we shall cover a few of the various structures and corresponding computational algorithms.

Transverse Structure

The most simple and straightforward of all of the ADP's is based upon the transverse structure as shown in Figure 3. If the noise is typically narrow band and very stationary, then the delay could be several samples with a corresponding high system delay in the filter; however, for broadband, less stationary data the delay is best fixed at the minimum of one sample as shown.

Output, e, for a filter length M at time n is calculated by:

$$e(n) = x_0(n) - \sum_{m=1}^{M} a_m(n) x_m(n) \qquad (1)$$

Where n is the time step and m is the filter stage. This is a moderate change in nomenclature from that presented in Reference 1; however, it is consistent with that presented in the remainder of the paper. Using the method of steepest descent, as mentioned in the previous section, the weight update equation is

$$a_m(n+1) = a_m(n) + u e(n) x_m(n) \qquad (2)$$

where u is a convergence constant.

One will note that a_m and x_m are vectors of length N while e is scaler. If the filter is to run continuously for long periods of time, then an additional factor is needed in equation 2 to prevent a long-term stability problem where the system becomes a no-pass filter[2].

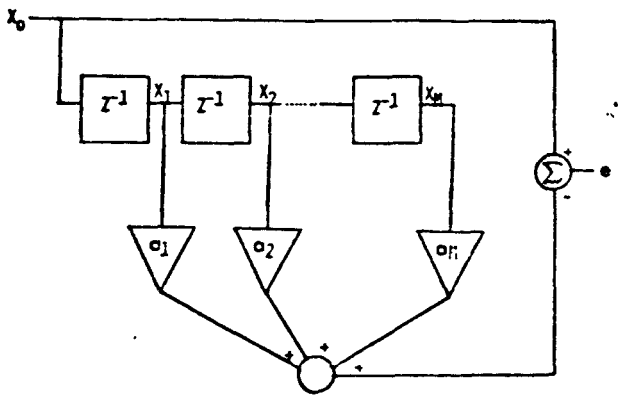

FIGURE 3
TRANSVERSE ADAPTIVE DIGITAL PREDICTOR

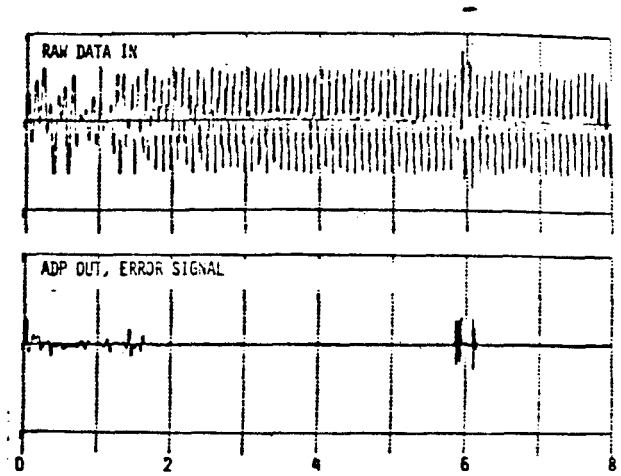

FIGURE 4
PERFORMANCE OF THE TRANSVERSE ADAPTIVE DIGITAL FILTER

$$a_m(n+1) = wa_m(n) + ue(n)x_m(n) \qquad (3)$$

where w is a constant usually slightly less than one. Reference 1 contains considerable discussion pertaining to the selection of u and its dependence upon the degree of correlation and power in the input signal. Larger u's result in faster convergence; however, an upper limit exists where the filter becomes numerically unstable especially when it encounters a burst of high level input.

An examination of equations 1, 2, and 3 reveals a fairly uncomplicated algorithm requiring only 3M multiplications and a similar number of additions. Programming in high level languages which use floating point representations for numeric values is straightforward; however, coding in fixed point systems such as commonly found in microcomputers requires some special care. We have successfully run 16 weight ADP's of this configuraton at rates as high as 400 samples per second in several microcomputers.

Figure 4 is an example of how this version of the ADP can be used to eliminate slowly varying narrow band noise and yet respond to transient signals. The input consists of two additive sinusoids; one is a constant 10 Hz, which continues throughout the record, the second of the same amplitude starts at 21 Hz and rises to nearly 45 Hz at the end of the record. At slightly under six seconds, a sudden burst of 55 Hz, also of equal amplitude, is applied lasting for about 1/4 second. The bottom trace shows the output, e of the ADP. There is a period of adaptation lasting for a couple of seconds and from then on the ADP not only has adapted to eliminate the 10 Hz constant signal, but is continuing to adapt and change its response to remove the varying frequency sine. However, when the sudden burst occurs, it cannot adapt that fast and responds with a large signal on its output. Thus, one can see how the ADP can remove noise that is of unknown frequency or a combination of frequencies which may be changing in frequency (and amplitude) and serve as a detector for a sudden, transient event. One should also observe that the detected signal is considerably altered as it passes through the ADP making these systems much more usable for event detectors than signal enhancers. The two-input adaptive filter of Figure 2a preserves the character of the detected signal better than the ADP and could be used providing a separate sensor is available which responds to noise only.

Lattice Structures

In cases where the noise is broadband and not very stationary, the transverse structure and its algorithm do not perform as well as for the narrow band stationary case. For these we turn to the more complex ADP based upon lattice structures as shown in Figure 5. The lineage of the lattice is difficult to trace with several contributors to its development. We use the methods and implementation presented by Griffiths in Reference 3.

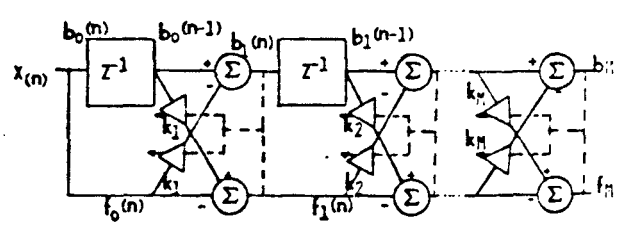

FIGURE 5
LATTICE ADAPTIVE DIGITAL PREDICTOR

As indicated in Figure 5, these ADP's have two error sequences represented as a forward prediction error $f_m(n)$ and a reverse or backward prediction error $b_m(n)$. Normally, we use $f_m(n)$ as the output of the ADP which is computed by the following recursive relationship:

$$f_{m+1}(n) = f_m(n) - k_m(n)b_m(n-1) \quad (4)$$

$$b_{m+1}(n) = -k_m(n)f_m(n) + b_m(n-1) \quad (5)$$

Using an analysis similar to that for the transverse form but somewhat expanded to correct a few difficulties arising from the typically poorly conditioned input data, the weight update equation is:

$$k_m(n+1) = k_m(n) + \frac{\alpha}{\sigma_m^2(n)}\left[f_{m+1}(n)b_m(n-1) + f_m(n)b_{m+1}(n)\right] \quad (6)$$

Note that now the weights, k, at each stage are updated on the basis of error outputs from that stage rather than from a final error. α is a convergence constant and σ^2 is a smoothed estimate of power at that stage which is made by the following recursive estimate:

$$\sigma_m^2(n) = \beta\sigma_m^2(n-1) + (1-\beta)\left[b_m^2(n-1) + f_m^2(n)\right] \quad (7)$$

β is the filter coefficient for the low pass filter and as a rule is set at $1-\alpha$.

As can be seen from equations 6 and 7, the lattice algorithm makes a stage-by-stage local estimate of the incoming signal at that stage, and it uses a dynamic convergence coefficient which varies inversely in response to a smoothed power estimate at each stage. This results in an ADP which not only handles relatively non-stationary inputs but which is inherently stable over a wide range of 's. The lattice structure has an additional advantage for implementation in fixed point systems in that it is inherently less susceptible than the transverse structure to fixed word length problems such as round-off error and limit cycle oscillations.

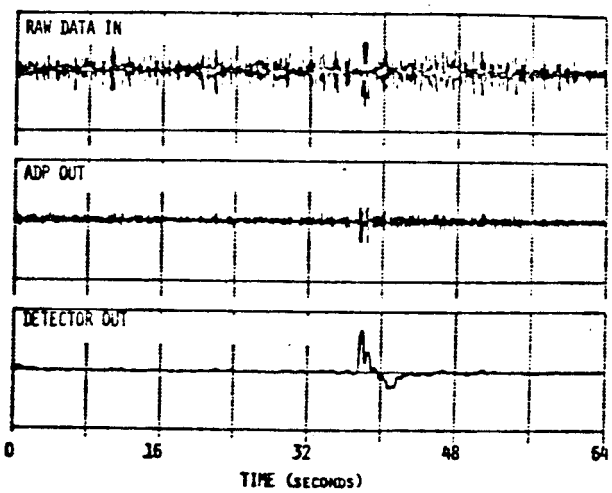

FIGURE 6

PERFORMANCE OF THE LATTICE ADAPTIVE DIGITAL FILTER AND VARIANCE DETECTOR, TRAIN NOISE

An example of the operation of the lattice ADP is shown in Figure 6. Here we have a large freight train passing on tracks that are located about 1 Km from a buried cable seismic sensor. At about 37 seconds into the record, an intruder creeps slowly across the sensor. The top trace represents the raw data into the lattice ADP, and the second trace, the output. The improvement in SNR is quite apparent. Another feature

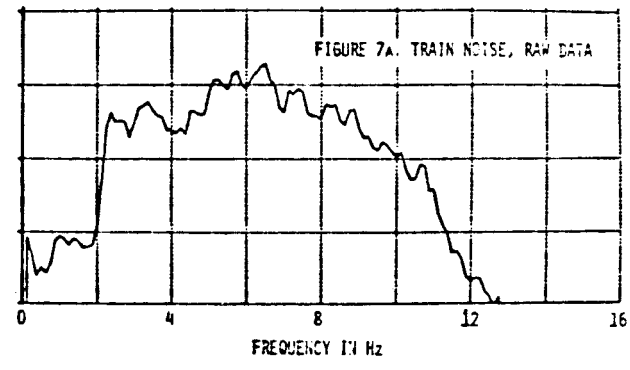

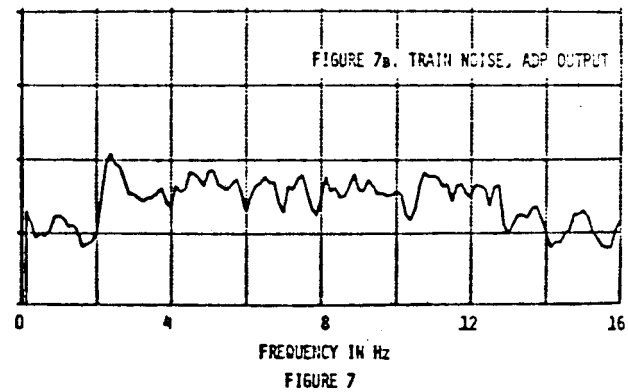

FIGURE 7

POWER DENSITY SPECTRA BEFORE AND AFTER THE LATTICE ADAPTIVE DIGITAL FILTER

of the ADP is shown in Figure 7. The top curve, Figure 7a, is the Power Density Spectrum (PDS) of the input data, and Figure 7b is the PDS of the output of the ADP. Note the "whitening" effect as the correlated components are removed from data. It is this characteristic of whitening which makes the operation of event detectors as described in the next section so successful.

As in the case of the transverse ADP, the signal is substantially changed by the process so the ADP is primarily used as an event detector. If one wishes to better preserve the character-

istics of the signal, then, there are two-sensor input lattice filters available. The operation and computing algorithms are described in Reference 3 and will not be covered here. They generally follow the form of the lattice ADP with a small additional complexity and computation requirement.

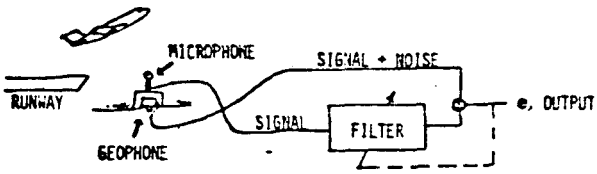

FIGURE 8

USING THE ADAPTIVE DIGITAL LATTICE FILTER FOR REMOVING AIRCRAFT NOISE FROM A GEOPHONE

We have investigated an interesting application of the two input lattice filter. Many times we would like to use a geophone for intrusion detection in areas where there is high coupling of accoustically-generated noise into the soil resulting in significant response from the geophone. This situation is often found near air bases where low overflying aircraft generate seismic signals which make the use of geophones for intrusion detection impossible without signal processing. Here we place a microphone mounted directly above the geophone to pick up the accoustic signal and feed it to the noise input of a lattice adaptive filter. The geophone output goes to the signal plus noise input. This configuration is represented by Figure 8, and in Figure 9, we have the output along with the two inputs to the filter.

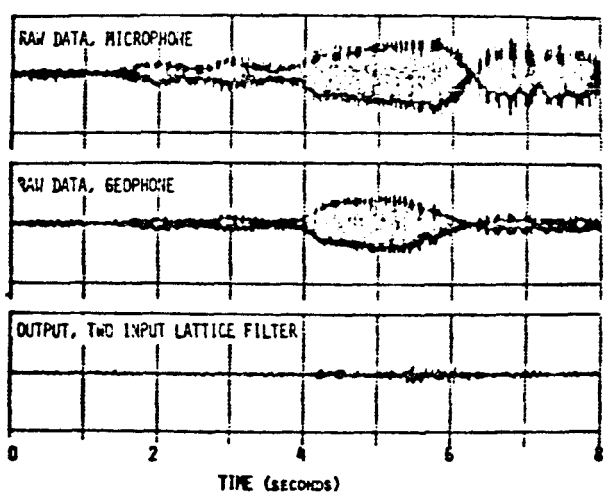

FIGURE 9

PERFORMANCE OF TWO-INPUT ADAPTIVE DIGITAL FILTER AIRCRAFT NOISE

There are additional forms of the lattice structure with cooresponding different computational algorithms. One version, termed the exact least squares lattice has been used with some success for sensor processing[4]. This form allows the two weights at each stage, k_m's in Figure 5, to be numerically different which results in very rapid conversion times, a useful characteristic for data which are essentially non-stationary. In this class of algorithms, conversion time is so short that little signal appears as error at the output. Event detection is usually accomplished by manipulation of the weight vector.

Detectors

In intrusion detection and other applications, we are interested primarily in event detection. A powerful method of event detection exploits the decorrelation abilities of the ADP as was noted in Figuure 7. This appears to be a much more reliable characteristic of these devices than improvements in SNR's. The problem of detection then becomes one of detecting signals in white noise. Techniques for accomplishing this are many and have widely been reported on in the literature for a number of years. We frequently use an adaptive variance estimator. A current estimate of variance based upon a few samples of the ADP output is compared against a past estimate of variance based upon a larger set of samples and delayed a few samples. The differences between the two variance estimates can be used as a detector. An example is represented by the third trace of Figure 6. One will note the very low level from the detector until an intruder is present—a considerable improvement in SNR over the input signal to the ADP, the top trace.

The final design of our intrusion detection system uses the standard lattice ADP of Figure 5, the algorithm of equations 4-7, and a variance detector based upon a ratio of the present and past variance rather than the difference[5]. The ratio makes the whole system somewhat more independent of input signal levels; but does add complexity to the computations, expecially in the fixed point version as implemented in a small microprocessor-based system.

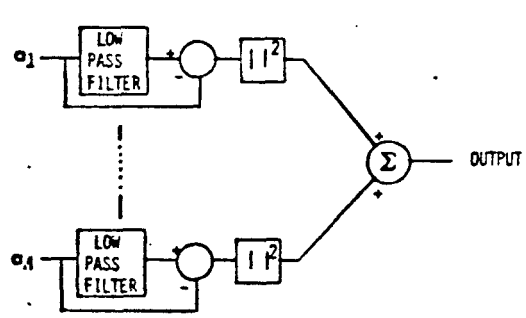

FIGURE 10

SMOOTHED WEIGHT DETECTOR

A technique mentioned earlier which seems to offer good detection possibilities is using the weight vector itself. For the rapidly adapting structure and algorithms, there usually is more movement in weights than in the error signal. One method is a straightforward computational scheme as outlined in Figure 10. Each weight is subtracted from a smoothed representation of its previous values, the difference is squared, and then the sum of all the squared values for all weights is used as the output of the detector. In Figure 11, the input data and detector output from Figure 6 are reproduced for comparison with the third trace, the output from the smoothed weight-change detector. The smoothed weight-change detector clearly indicates the intruder crossing, but also has significant output for other events in the data. One probably would not use it for intrusion detection, nevertheless, there are applications where its use can be advantageous.

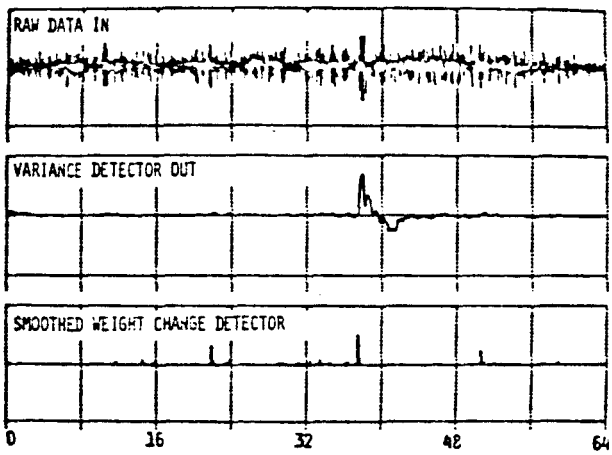

FIGURE 11

COMPARISON OF VARIANCE DETECTOR AND SMOOTHED WEIGHT-CHANGE DETECTOR

This detection technique has recently been used at Sandia for detecting time of arrivals in data from the national seismic station[7]. It appears to have some distinct advantages when the more complex adaptive algorithms can be used, in off line computational situations, for example. Another difficulty does arise when using it for intrusion detection. During periods of very low noise, the noise that is present may be essentially white. If a weak intruder signal is also random and nearly white, then there will be little change in the weights. In this case, the error signal detectors appear to work better.

Conclusions

Adaptive signal processing techniques can be used to advantage in processing seismic data to remove the effects of certain classes of noise. Adaptive processing is especially advantageous where the noise cannot be characterized or is of a slowly varying character. A number of different configurations are available for implementing the adaptive processing technology, most of which are easy and straightforward to use. If event detection is needed, then a number of detectors are available which, depending on the situation, can produce good results.

REFERENCES

1. B. Widrow, et al, "Adaptive Noise Cancelling; Principles and Applications," Proc. of the IEEE, Vol. 63, No. 17. December 1975.

2. N. Ahmed, G. Elliott, S. Stearns, "Long-Term Instability Problems in Adaptive Noise-Cancellers," August 1978, Sandia Report SAND78-1032.

3. L. Griffiths, "An Adaptive Lattice Structure for Noise Cancelling Applications," Proc. ICASSP, Tulsa, Okla. April 1978.

4. J. Claassen, M. Patterson, "A Comparative Study of Adaptive Noise Cancellation Algorithms for Intrusion Detection Systems," Proc. IEEE Midwest Symposium on Circuits and Systems, Albuquerque, NM. June 1981.

5. N. Ahmed, G. Elliott, "An Intrusion-Detection System for Perimeter Sensors," Proc. IEEE Midwest Symposium on Circuits and Systems, Albuquerque, NM. June 1981.

6. S. Stearns, L. Vortman, "Seismic Event Detection Using Adaptive Predictors," Proc. ICASSP, Atlanta, GA. March 1981.

SAND81-1079

Distribution:
Headquarters (3)
ESD/OCB/Stop 36
Hanscom AFB, MA 01731
Attn: COL P. Conran, OCB (1)
B. Allen, OCBE (2)

Kansas State University (5)
Dept. of Electrical Engr.
Manhattan, KS 66506
Attn: Prof. N. Ahmed (5)

1111 S. D. Stearns
1260 R. E. Spaulding
1700 W. C. Myre
1710 V. E. Blake, Jr.
1720 C. H. Mauney
1730 J. D. Kennedy
1738 R. K. Petersen
1750 T. A. Sellers
1760 J. Jacobs
1763 R. C. Beckmann
3141 L. J. Erickson (5)
3151 W. L. Garner (3)
4750 V. L. Dugan
1738 Division File
1738 G. R. Elliott (10)

For DOE/NC (Unlimited Release)
DOE/TIC (25)
(C. Dalin, 3154-3)