HWC

SAND80-7107
Unlimited Release
UC-70

SCANNED

Meteorological and Air Quality Data Quarterly Report 5TH WIPP Site: Eddy County, New Mexico Summer Quarter, June 1977 - August 1977

[redacted]

[redacted]

Sandia National Laboratories

Issued by Sandia Laboratories, operated
for the United States Department of
Energy by Sandia Corporation.

NOTICE

This report was prepared as an account of work sponsored by the United States Government. Neither the United States nor the United States Department of Energy, nor any of their employees, nor any of their contractors, subcontractors, or their employees, makes any warranty, express or implied, or assumes any legal liability or responsibility for the accuracy, completeness or usefulness of any information, apparatus, production or process disclosed, or represents that its use would not infringe privately owned rights.

Printed in the United State of America

Available from

National Technical Information Service
U. S. Department of Commerce
5285 Port Royal Road
Springfield, VA 22161

Price: Printed Copy $7.00, Microfiche $3.00

SAND 80-7107

Unlimited Release

June 1980

METEOROLOGICAL AND AIR QUALITY DATA QUARTERLY REPORT

WIPP SITE: EDDY COUNTY, NEW MEXICO

SUMMER QUARTER, JUNE 1977 - AUGUST 1977

L. P. Pocalujka
E. Babij
P. A. Catizone
TRC Environmental Consultants, Inc.
Wethersfield, CT 06109

H. W. Church
Sandia National Laboratories
Albuquerque, NM 87175

ABSTRACT

The purpose of the WIPP meteorological, air quality, and radiological measurements program was to support the environmental effort for the evaluation of the site suitability. This data report is the latest in a series of seasonal quarterly data summaries to be issued for the southeastern New Mexico site.

TABLE OF CONTENTS

		Page
1.0	INTRODUCTION	1
2.0	EQUIPMENT AND DATA SUITE	3
3.0	DATA COLLECTION AND FORMAT	6
	REFERENCES	10
APPENDIX A -	Meteorological Data Tables	microfiche insert, back cover pocket
APPENDIX B -	Air Quality Data Tables	
APPENDIX C -	Wind Rose Tables and Plots	C-1
APPENDIX D -	Distribution List	D-1

LIST OF FIGURES

1. General Location of the WIPP Site 9

LIST OF TABLES

1. Equipment at WIPP Site as of August, 1977 5

1.0 INTRODUCTION

The U. S. Department of Energy (DOE) is evaluating the suitability of a site in southeastern New Mexico for a Waste Isolation Pilot Plant (WIPP). The WIPP is intended to serve as a nuclear waste repository for those defense transuranic wastes, both contact-handled and remotely handled, that the DOE may designate as requiring deep geologic disposal. The WIPP will also provide a separate underground facility in which in-situ experiments with various waste forms, including high-level waste, may be conducted.

The primary purpose of the WIPP environmental effort is to ensure that WIPP would comply with federal and state regulations, legislative requirements, and potential requirements regarding protection of public health, safety and environmental quality. The meteorological, air quality, and radiological measurements reported here are contributing to the overall WIPP environmental effort.

The WIPP site is located 42 km (26 mi) east of the City of Carlsbad, New Mexico, north of State Highway 128 (Figure 1). All the surrounding land is under Federal or State jurisdiction. The site is gently rolling plain covered with windblown sand and sparse desert vegetation. The climate is cool in the winter and hot in the summer. Rainfall is about 33 cm (13 in) per year. There are no perennial streams in the immediate area; the nearest is the Pecos River 24 km (15 mi) to the west and southwest.

This quarterly data report is the fifth in a series covering the environmental data acquired at the proposed WIPP site in one seasonal quarter. Significant changes in equipment or measurement site location will be discussed in the report for the quarter in which the changes were made. Previous reports in this series are listed in the references.

2.0 EQUIPMENT AND DATA SUITE

The location, equipment used, and methods of data collection have undergone an evolutionary process since the inception of the program in December, 1975. In early 1976 a meteorological station was established at the AEC No. 8 drilling pad (Sect. 11, T22S, R31E). On June 14, 1976, the station was moved to the Old Badger Well site (Sect. 15, T22S, R31E, Elevation 1058 m MSL). The equipment used and modifications made were discussed as they were implemented in the preceding quarterly reports. On May 16, 1977, the station was moved to its present location (Section 21, T22S, R31E, Elevation 1050 meters MSL). It was upgraded to comply with the criteria outlined in U. S. Nuclear Regulatory Commission Regulatory Guide 1.23, Rev. 0.

The meteorological equipment in use during this quarter was a modular meteorological system, consisting of standard sensors mounted on a 30-meter tower and interfaced with signal conditioners.

Air quality parameters included continuous carbon monoxide (CO), ozone (O_3) and background radiation analyzers. The CO analyzer utilized was an NDIR MSA Model 202. The O_3 analyzer was a Dasibi Ultraviolet until July 25 and a Columbia Scientific chemiluminescent instrument thereafter.

All parameters were recorded digitally, utilizing a John Fluke data logger. In addition, wind speed and direction were recorded on Esterline-Angus strip chart recorders. The data logger sequentially sampled sensors at about three channels per

second and recorded the output voltages on paper tape. Appropriate calibration factors were later applied to convert these voltage readings to engineering units. The suite of meteorological and air quality data measured hourly at the site is shown in Table 1.

TABLE 1

EQUIPMENT AT WIPP SITE AS OF AUGUST, 1977

PARAMETER	LOCATION (Hgt. above ground m.)	MAKE AND MODEL	OPERATING RANGE
Wind Speed Wind Direction	3, 10, 30 3, 10, 30	Climatronics Corportion (F-460)	0-50 m/s 0-540 degrees
Temperature T Dewpoint	3, 10, 30 10-3, 30-3, 30-10 3	Climatronics Corporation (F-460)	-30 - +50 C - 2 - +10 C -40 - +42 C
Pressure	Station	Climatronics Corporation	850 - 975 mb
Precipitation	Ground-Level	Texas Electronics	0.01-inch of water/tip
Shortwave Radiation	5	Eppley Model PSP	Sensitivity $\frac{9\ mv}{(W/m^2)}$
Longwave Radiation	5	Eppley Model PIR	Sensitivity $\frac{3\ mv}{(W/m^2)}$
Background Ionizing Radiation	1	Reuter-Stokes (RSS-111)	0-25μr/hour
Carbon Monoxide	3	Mine Safety Appliance Co (202)	0 - 50 ppm
Ozone	3	Dasibi UV before 7/25, Columbia Scientific, Inc. (1100-2) after 7/25	0 - 1.0 ppm

3.0 DATA COLLECTION AND FORMAT

Meteorological data except wind direction were obtained directly from the logger and represent the value of the parameter at the report hour. Wind direction was determined visually from the strip chart as the average value during a 6-minute period centered on the report hour. Peak wind speed was obtained by visually scanning the wind-speed strip chart and finding the maximum value during the hour preceding the report hour. The remaining parameters were automatically averaged and recorded during the 5-minute period from 6 minutes before to 1 minute before the report hour.

This quarterly report presents meteorological, air quality, and radiation data in three appendices. Appendix A presents tabular meteorological data as follows:

1. Daily base-data tabulations that report hourly averaged meteorological data.

2. Monthly base-data tabulations that present daily averages or accumulations of all meteorological and radiation data.

3. Quarterly base-data tabulations that present monthly averages of accumulations for all parameters measured.

Appendix B presents tabular air quality data as follows:

1. Daily base-data tabulations that report hourly averaged air quality data and 8-hour averages for CO.

2. Monthly base-data tabulations that present daily averages of air quality data.

Appendix C presents tabulated and plotted data as follows:

1. Monthly tabulations of wind direction and wind speed frequencies of occurrence.

2. Quarterly tabulation of wind-direction and wind-speed frequencies of occurrence.

3. Monthly average wind rose (direction from which the wind was blowing).

4. Quarterly average wind rose.

Appendices A and B are on microfiche in the back cover pocket.

Several comments should be made regarding the methods of processing and displaying certain data presented in the quarterly report.

1. Daily base-data tabulations: The "DAY.HR" column heading shows the numbered day of the year being reported (day 152 is June 1, 1977) and the last two numbers give the hour (23 is 11:00 PM, Mountain Standard Time). All units are given in the metric system. Sky and reflected radiation are given in W/m^2. Hourly precipitation values are accumulations for the indicated hour in cm.

2. Monthly base-data tabulations: For all but wind data and precipitation, the daily averages are arithmetic averages of the hourly values. For wind data, the daily average wind speed and direction are vector averages obtained in the following manner. The north-south and the east-west vector wind components are summed and divided by the number of hours. The vector wind speed is determined as

$$V_W = (u^2 + v^2)^{1/2},$$

and the vector average wind direction is obtained as

$$\theta = -\tan^{-1}(u/v)$$

Where u is the average of the east-west wind velocity components, and v is the average of the north-south wind velocity components. South to north and west to east wind components are positive. The daily precipitation values shown are the summation of all precipitation during the 24-hr period. The peak wind speed is reported as the peak value that occurred during the 24-hr period. The daily shortwave radiation average will be reported as missing if any data from any of the hours during the day are missing.

3. Monthly and quarterly tabulations of wind-direction and wind-speed frequencies of occurrence: Entries in these tables are the number of hours that winds of a given speed blew from the direction noted.

4. Quarterly base-data tabulations: All comments listed in 1 and 2 above pertain. The monthly sky-radiation averages will be calculated from only those days which were not reported as missing on the monthly base report.

5. The wind rose graphically presents the frequencies of occurrence of wind-direction and wind-speed categories.

6. The entry of a field of 9's in the tabular data indicates that the particular item either was not taken, or appeared erroneous and was deleted. This format was elected as a matter of convention.

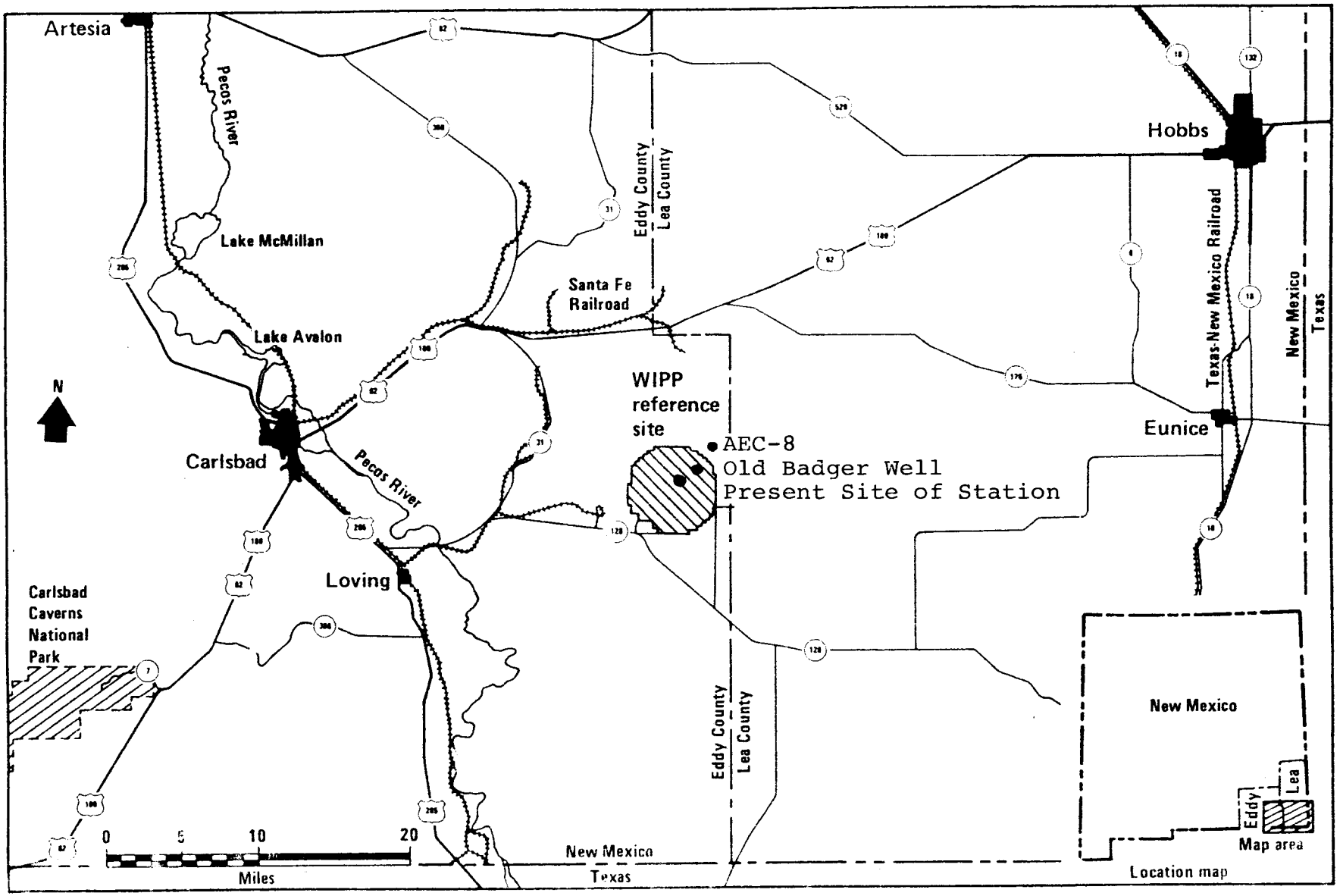

Figure 1. General location of the WIPP reference site.

REFERENCES

Pocalujka, L. P., E. Babij and H. W. Church, 1979a: Meteorological Data Quarterly Report, WIPP Site: Eddy County, New Mexico, Summer Quarter, June-August 1976. Sandia Laboratories Report, SAND 79-7026.

Pocalujka, L. P., E. Babij and H. W. Church, 1979b: Meteorological Data Quarterly Report, WIPP Site: Eddy County, New Mexico, Autumn Quarter, September-November 1976. Sandia Laboratories Report, SAND 79-7041.

Pocalujka, L. P., E. Babij and H. W. Church, 1979c: Meteorological Data Quarterly Report, WIPP Site: Eddy County, New Mexico, Winter Quarter, December 1976 - February 1977. Sandia Laboratories Report, SAND 79-7042.

Pocalujka, L. P., E. Babij, P. A. Catizone, and H. W. Church, 1980a: Meteorological Data Quarterly Report, WIPP Site; Eddy County, New Mexico, Spring Quarter, March-May 1977. Sandia Laboratories Report, SAND 79-7109.

APPENDIX C

WIND ROSE TABLES AND PLOTS

SANDIA WIPP PROJECT

10 M WIND — DISTRIBUTION OF WIND DIRECTIONS AND SPEEDS — 6/ 1/77 - 6/30/77

30-10 M DELTA T — ALL STABILITIES COMBINED

SPEED (MPS)	DIRECTION NNE	NE	ENE	E	ESE	SE	SSE	S	SSW	SW	WSW	W	WNW	NW	NNW	N	TOTAL
0.3- 1.4	1	0	2	2	11	6	2	1	2	3	0	1	1	2	2	2	38
(1)	0.3	0.0	0.6	0.6	3.2	1.7	0.6	0.3	0.6	0.9	0.0	0.3	0.3	0.6	0.6	0.6	11.0
(2)	0.3	0.0	0.6	0.6	3.2	1.7	0.6	0.3	0.6	0.9	0.0	0.3	0.3	0.6	0.6	0.6	11.0
1.5- 3.0	10	3	6	5	29	27	12	8	6	9	2	4	2	2	5	0	130
(1)	2.9	0.9	1.7	1.4	8.4	7.8	3.5	2.3	1.7	2.6	0.6	1.2	0.6	0.6	1.4	0.0	37.7
(2)	2.9	0.9	1.7	1.4	8.4	7.8	3.5	2.3	1.7	2.6	0.6	1.2	0.6	0.6	1.4	0.0	37.7
3.1- 5.0	3	4	4	4	9	35	24	14	9	5	1	1	0	1	0	1	115
(1)	0.9	1.2	1.2	1.2	2.6	10.1	7.0	4.1	2.6	1.4	0.3	0.3	0.0	0.3	0.0	0.3	33.3
(2)	0.9	1.2	1.2	1.2	2.6	10.1	7.0	4.1	2.6	1.4	0.3	0.3	0.0	0.3	0.0	0.3	33.3
5.1- 8.0	1	1	1	3	2	23	14	2	1	0	0	0	0	0	1	0	49
(1)	0.3	0.3	0.3	0.9	0.6	6.7	4.1	0.6	0.3	0.0	0.0	0.0	0.0	0.0	0.3	0.0	14.2
(2)	0.3	0.3	0.3	0.9	0.6	6.7	4.1	0.6	0.3	0.0	0.0	0.0	0.0	0.0	0.3	0.0	14.2
8.1-10.4	0	1	0	1	0	4	3	0	0	0	0	0	1	0	0	0	10
(1)	0.0	0.3	0.0	0.3	0.0	1.2	0.9	0.0	0.0	0.0	0.0	0.0	0.3	0.0	0.0	0.0	2.9
(2)	0.0	0.3	0.0	0.3	0.0	1.2	0.9	0.0	0.0	0.0	0.0	0.0	0.3	0.0	0.0	0.0	2.9
OVER 10.4	0	0	0	0	0	0	2	0	0	0	0	0	0	0	1	0	3
(1)	0.0	0.0	0.0	0.0	0.0	0.0	0.6	0.0	0.0	0.0	0.0	0.0	0.0	0.0	0.3	0.0	0.9
(2)	0.0	0.0	0.0	0.0	0.0	0.0	0.6	0.0	0.0	0.0	0.0	0.0	0.0	0.0	0.3	0.0	0.9
ALL SPEEDS	15	9	13	15	51	95	57	25	18	17	3	6	4	5	9	3	345
(1)	4.3	2.6	3.8	4.3	14.8	27.5	16.5	7.2	5.2	4.9	0.9	1.7	1.2	1.4	2.6	0.9	100.0
(2)	4.3	2.6	3.8	4.3	14.8	27.5	16.5	7.2	5.2	4.9	0.9	1.7	1.2	1.4	2.6	0.9	100.0

(1)=PERCENT OF ALL GOOD OBS FOR THIS PAGE
(2)=PERCENT OF ALL GOOD OBS FOR THE PERIOD

345 GOOD HRS 0 HRS (0.0 PCT) LESS THAN 0.3 MPS 720 HRS IN THE TIME PERIOD 47.9 PCT DATA RECOVERY

SANDIA WIPP PROJECT

10 M WIND — DISTRIBUTION OF WIND DIRECTIONS AND SPEEDS — 7/ 1/77 - 7/31/77

30-10 M DELTA T — ALL STABILITIES COMBINED

SPEED (MPS)		DIRECTION NNE	NE	ENE	E	ESE	SE	SSE	S	SSW	SW	WSW	W	WNW	NW	NNW	N	TOTAL
0.3- 1.4		0	0	3	1	10	26	2	2	1	3	0	2	1	1	2	0	54
	(1)	0.0	0.0	0.5	0.2	1.6	4.1	0.3	0.3	0.2	0.5	0.0	0.3	0.2	0.2	0.3	0.0	8.6
	(2)	0.0	0.0	0.5	0.2	1.6	4.1	0.3	0.3	0.2	0.5	0.0	0.3	0.2	0.2	0.3	0.0	8.6
1.5- 3.0		2	8	2	4	27	79	17	5	7	7	3	3	1	2	4	1	172
	(1)	0.3	1.3	0.3	0.6	4.3	12.5	2.7	0.8	1.1	1.1	0.5	0.5	0.2	0.3	0.6	0.2	27.3
	(2)	0.3	1.3	0.3	0.6	4.3	12.5	2.7	0.8	1.1	1.1	0.5	0.5	0.2	0.3	0.6	0.2	27.3
3.1- 5.0		3	3	6	10	33	100	53	28	12	7	1	3	1	1	1	2	264
	(1)	0.5	0.5	1.0	1.6	5.2	15.9	8.4	4.4	1.9	1.1	0.2	0.5	0.2	0.2	0.2	0.3	41.9
	(2)	0.5	0.5	1.0	1.6	5.2	15.9	8.4	4.4	1.9	1.1	0.2	0.5	0.2	0.2	0.2	0.3	41.9
5.1- 8.0		0	2	3	7	9	33	61	7	3	0	0	0	0	0	0	1	126
	(1)	0.0	0.3	0.5	1.1	1.4	5.2	9.7	1.1	0.5	0.0	0.0	0.0	0.0	0.0	0.0	0.2	20.0
	(2)	0.0	0.3	0.5	1.1	1.4	5.2	9.7	1.1	0.5	0.0	0.0	0.0	0.0	0.0	0.0	0.2	20.0
8.1-10.4		0	1	0	0	1	2	9	0	0	0	0	0	0	0	0	0	13
	(1)	0.0	0.2	0.0	0.0	0.2	0.3	1.4	0.0	0.0	0.0	0.0	0.0	0.0	0.0	0.0	0.0	2.1
	(2)	0.0	0.2	0.0	0.0	0.2	0.3	1.4	0.0	0.0	0.0	0.0	0.0	0.0	0.0	0.0	0.0	2.1
OVER 10.4		0	0	0	0	0	1	0	0	0	0	0	0	0	0	0	0	1
	(1)	0.0	0.0	0.0	0.0	0.0	0.2	0.0	0.0	0.0	0.0	0.0	0.0	0.0	0.0	0.0	0.0	0.2
	(2)	0.0	0.0	0.0	0.0	0.0	0.2	0.0	0.0	0.0	0.0	0.0	0.0	0.0	0.0	0.0	0.0	0.2
ALL SPEEDS		5	14	14	22	80	241	142	42	23	17	4	8	3	4	7	4	630
	(1)	0.8	2.2	2.2	3.5	12.7	38.3	22.5	6.7	3.7	2.7	0.6	1.3	0.5	0.6	1.1	0.6	100.0
	(2)	0.8	2.2	2.2	3.5	12.7	38.3	22.5	6.7	3.7	2.7	0.6	1.3	0.5	0.6	1.1	0.6	100.0

(1)=PERCENT OF ALL GOOD OBS FOR THIS PAGE
(2)=PERCENT OF ALL GOOD OBS FOR THE PERIOD

630 GOOD HRS — 0 HRS (0.0 PCT) LESS THAN 0.3 MPS — 744 HRS IN THE TIME PERIOD — 84.7 PCT DATA RECOVERY

SANDIA WIPP PROJECT

10 M WIND — DISTRIBUTION OF WIND DIRECTIONS AND SPEEDS — 8/ 1/77 - 8/31/77

30-10 M DELTA T — ALL STABILITIES COMBINED

SPEED (MPS)	DIRECTION NNE	NE	ENE	E	ESE	SE	SSE	S	SSW	SW	WSW	W	WNW	NW	NNW	N	TOTAL
0.3- 1.4	1	2	2	1	5	13	4	1	1	0	2	7	2	1	2	1	45
(1)	0.1	0.3	0.3	0.1	0.7	1.9	0.6	0.1	0.1	0.0	0.3	1.0	0.3	0.1	0.3	0.1	6.6
(2)	0.1	0.3	0.3	0.1	0.7	1.9	0.6	0.1	0.1	0.0	0.3	1.0	0.3	0.1	0.3	0.1	6.6
1.5- 3.0	3	4	6	3	36	69	17	13	16	3	5	6	2	3	10	6	202
(1)	0.4	0.6	0.9	0.4	5.3	10.1	2.5	1.9	2.3	0.4	0.7	0.9	0.3	0.4	1.5	0.9	29.6
(2)	0.4	0.6	0.9	0.4	5.3	10.1	2.5	1.9	2.3	0.4	0.7	0.9	0.3	0.4	1.5	0.9	29.6
3.1- 5.0	5	9	10	14	28	83	42	24	17	6	3	2	1	2	3	2	251
(1)	0.7	1.3	1.5	2.0	4.1	12.2	6.1	3.5	2.5	0.9	0.4	0.3	0.1	0.3	0.4	0.3	36.7
(2)	0.7	1.3	1.5	2.0	4.1	12.2	6.1	3.5	2.5	0.9	0.4	0.3	0.1	0.3	0.4	0.3	36.7
5.1- 8.0	2	2	12	7	11	33	60	26	2	2	0	0	2	0	0	1	160
(1)	0.3	0.3	1.8	1.0	1.6	4.8	8.8	3.8	0.3	0.3	0.0	0.0	0.3	0.0	0.0	0.1	23.4
(2)	0.3	0.3	1.8	1.0	1.6	4.8	8.8	3.8	0.3	0.3	0.0	0.0	0.3	0.0	0.0	0.1	23.4
8.1-10.4	0	1	6	4	3	1	4	1	0	0	0	0	0	0	0	0	20
(1)	0.0	0.1	0.9	0.6	0.4	0.1	0.6	0.1	0.0	0.0	0.0	0.0	0.0	0.0	0.0	0.0	2.9
(2)	0.0	0.1	0.9	0.6	0.4	0.1	0.6	0.1	0.0	0.0	0.0	0.0	0.0	0.0	0.0	0.0	2.9
OVER 10.4	0	0	2	2	1	0	0	0	0	0	0	0	0	0	0	0	5
(1)	0.0	0.0	0.3	0.3	0.1	0.0	0.0	0.0	0.0	0.0	0.0	0.0	0.0	0.0	0.0	0.0	0.7
(2)	0.0	0.0	0.3	0.3	0.1	0.0	0.0	0.0	0.0	0.0	0.0	0.0	0.0	0.0	0.0	0.0	0.7
ALL SPEEDS	11	18	38	31	84	199	127	65	36	11	10	15	7	6	15	10	683
(1)	1.6	2.6	5.6	4.5	12.3	29.1	18.6	9.5	5.3	1.6	1.5	2.2	1.0	0.9	2.2	1.5	100.0
(2)	1.6	2.6	5.6	4.5	12.3	29.1	18.6	9.5	5.3	1.6	1.5	2.2	1.0	0.9	2.2	1.5	100.0

(1)=PERCENT OF ALL GOOD OBS FOR THIS PAGE
(2)=PERCENT OF ALL GOOD OBS FOR THE PERIOD

683 GOOD HRS — 0 HRS (0.0 PCT) LESS THAN 0.3 MPS — 744 HRS IN THE TIME PERIOD — 91.8 PCT DATA RECOVERY

SANDIA WIPP PROJECT

10 M WIND — DISTRIBUTION OF WIND DIRECTIONS AND SPEEDS — 6/ 1/77 - 8/31/77

30-10 M DELTA T — ALL STABILITIES COMBINED

SPEED (MPS)		DIRECTION NNE	NE	ENE	E	ESE	SE	SSE	S	SSW	SW	WSW	W	WNW	NW	NNW	N	TOTAL
0.3- 1.4		2	2	7	4	26	45	8	4	4	6	2	10	4	4	6	3	137
	(1)	0.1	0.1	0.4	0.2	1.6	2.7	0.5	0.2	0.2	0.4	0.1	0.6	0.2	0.2	0.4	0.2	8.3
	(2)	0.1	0.1	0.4	0.2	1.6	2.7	0.5	0.2	0.2	0.4	0.1	0.6	0.2	0.2	0.4	0.2	8.3
1.5- 3.0		15	15	14	12	92	175	46	26	29	19	10	13	5	7	19	7	504
	(1)	0.9	0.9	0.8	0.7	5.5	10.6	2.8	1.6	1.7	1.1	0.6	0.8	0.3	0.4	1.1	0.4	30.4
	(2)	0.9	0.9	0.8	0.7	5.5	10.6	2.8	1.6	1.7	1.1	0.6	0.8	0.3	0.4	1.1	0.4	30.4
3.1- 5.0		11	16	20	28	70	218	119	66	38	18	5	6	2	4	4	5	630
	(1)	0.7	1.0	1.2	1.7	4.2	13.1	7.2	4.0	2.3	1.1	0.3	0.4	0.1	0.2	0.2	0.3	38.0
	(2)	0.7	1.0	1.2	1.7	4.2	13.1	7.2	4.0	2.3	1.1	0.3	0.4	0.1	0.2	0.2	0.3	38.0
5.1- 8.0		3	5	16	17	22	89	135	35	6	2	0	0	2	0	1	2	335
	(1)	0.2	0.3	1.0	1.0	1.3	5.4	8.1	2.1	0.4	0.1	0.0	0.0	0.1	0.0	0.1	0.1	20.2
	(2)	0.2	0.3	1.0	1.0	1.3	5.4	8.1	2.1	0.4	0.1	0.0	0.0	0.1	0.0	0.1	0.1	20.2
8.1-10.4		0	3	6	5	4	7	16	1	0	0	0	0	1	0	0	0	43
	(1)	0.0	0.2	0.4	0.3	0.2	0.4	1.0	0.1	0.0	0.0	0.0	0.0	0.1	0.0	0.0	0.0	2.6
	(2)	0.0	0.2	0.4	0.3	0.2	0.4	1.0	0.1	0.0	0.0	0.0	0.0	0.1	0.0	0.0	0.0	2.6
OVER 10.4		0	0	2	2	1	1	2	0	0	0	0	0	0	0	1	0	9
	(1)	0.0	0.0	0.1	0.1	0.1	0.1	0.1	0.0	0.0	0.0	0.0	0.0	0.0	0.0	0.1	0.0	0.5
	(2)	0.0	0.0	0.1	0.1	0.1	0.1	0.1	0.0	0.0	0.0	0.0	0.0	0.0	0.0	0.1	0.0	0.5
ALL SPEEDS		31	41	65	68	215	535	326	132	77	45	17	29	14	15	31	17	1658
	(1)	1.9	2.5	3.9	4.1	13.0	32.3	19.7	8.0	4.6	2.7	1.0	1.7	0.8	0.9	1.9	1.0	100.0
	(2)	1.9	2.5	3.9	4.1	13.0	32.3	19.7	8.0	4.6	2.7	1.0	1.7	0.8	0.9	1.9	1.0	100.0

(1) =PERCENT OF ALL GOOD OBS FOR THIS PAGE
(2) =PERCENT OF ALL GOOD OBS FOR THE PERIOD

1658 GOOD HRS 0 HRS (0.0 PCT) LESS THAN 0.3 MPS 2208 HRS IN THE TIME PERIOD 75.1 PCT DATA RECOVERY

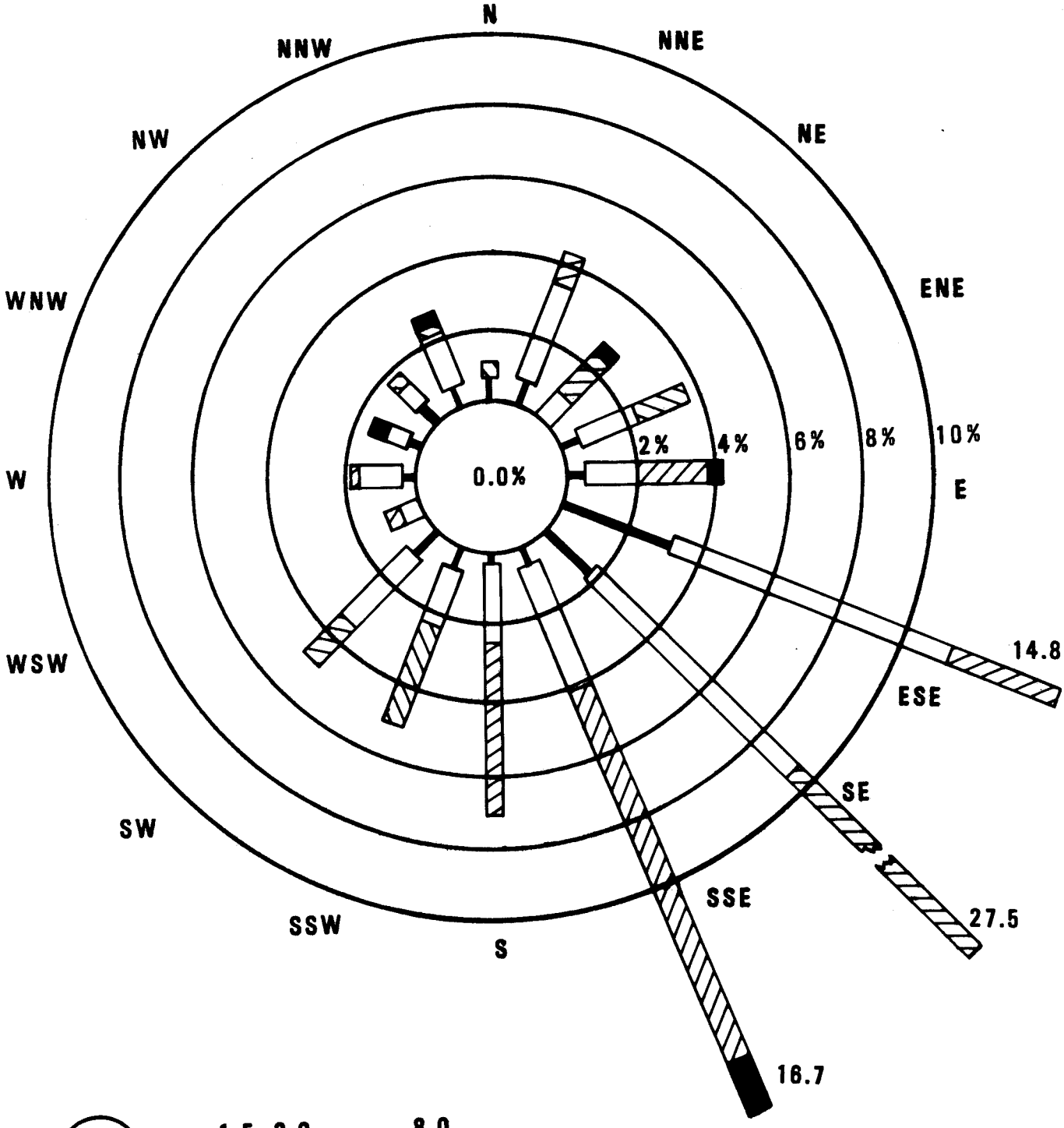

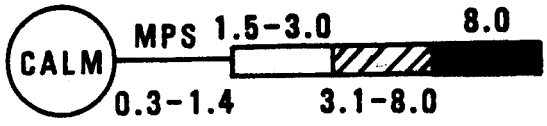

SPEED CLASS LEGEND

Bar Length Segments Are Proportional
To Indicated Speed Intervals Occurrence

WIPP WIND ROSE FOR
JUNE 1977

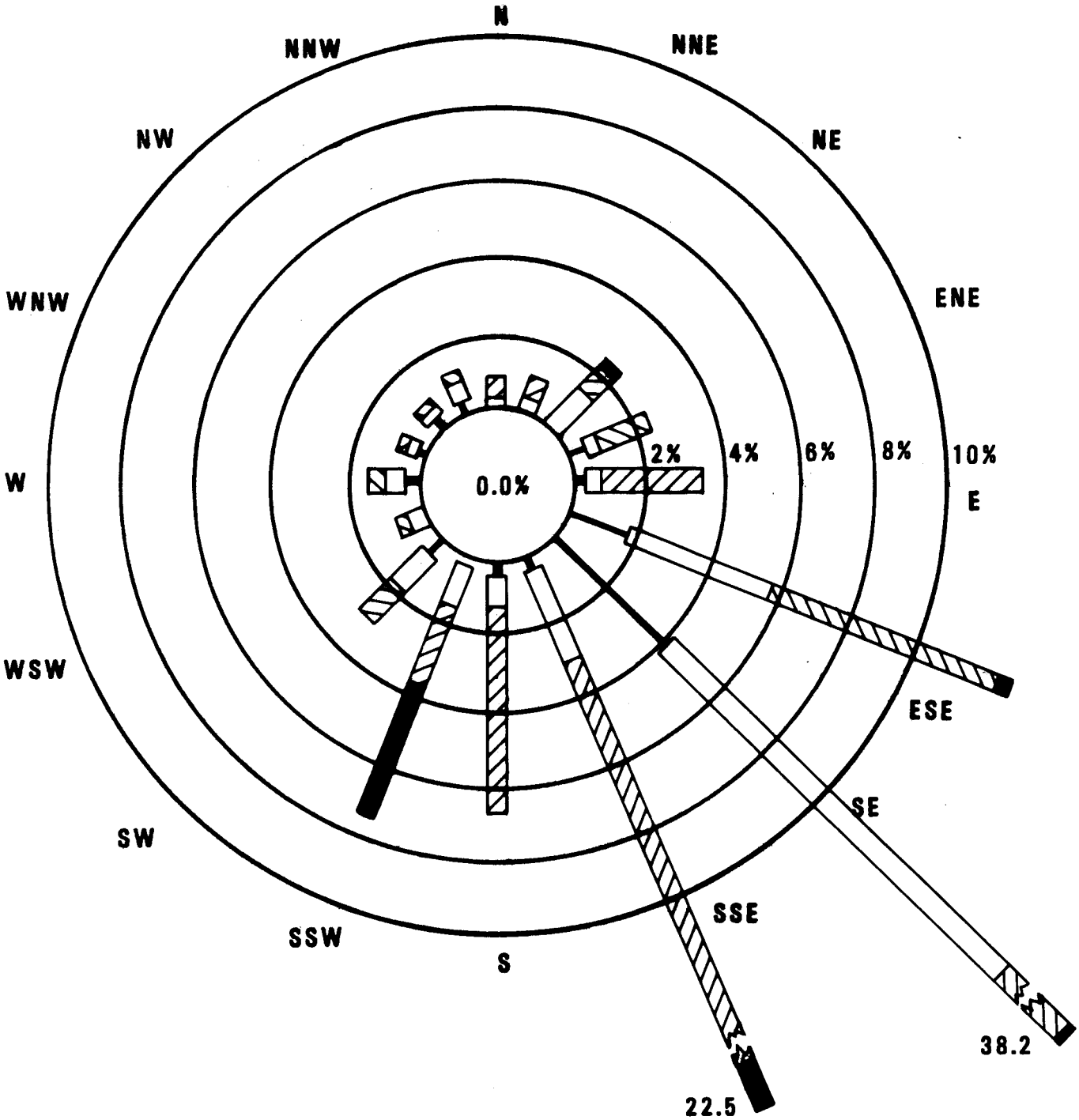

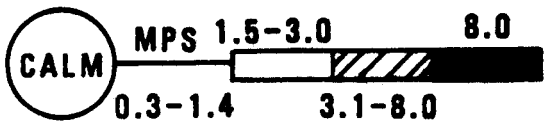

SPEED CLASS LEGEND

Bar Length Segments Are Proportional
To Indicated Speed Intervals Occurrence

WIPP WIND ROSE FOR
JULY 1977

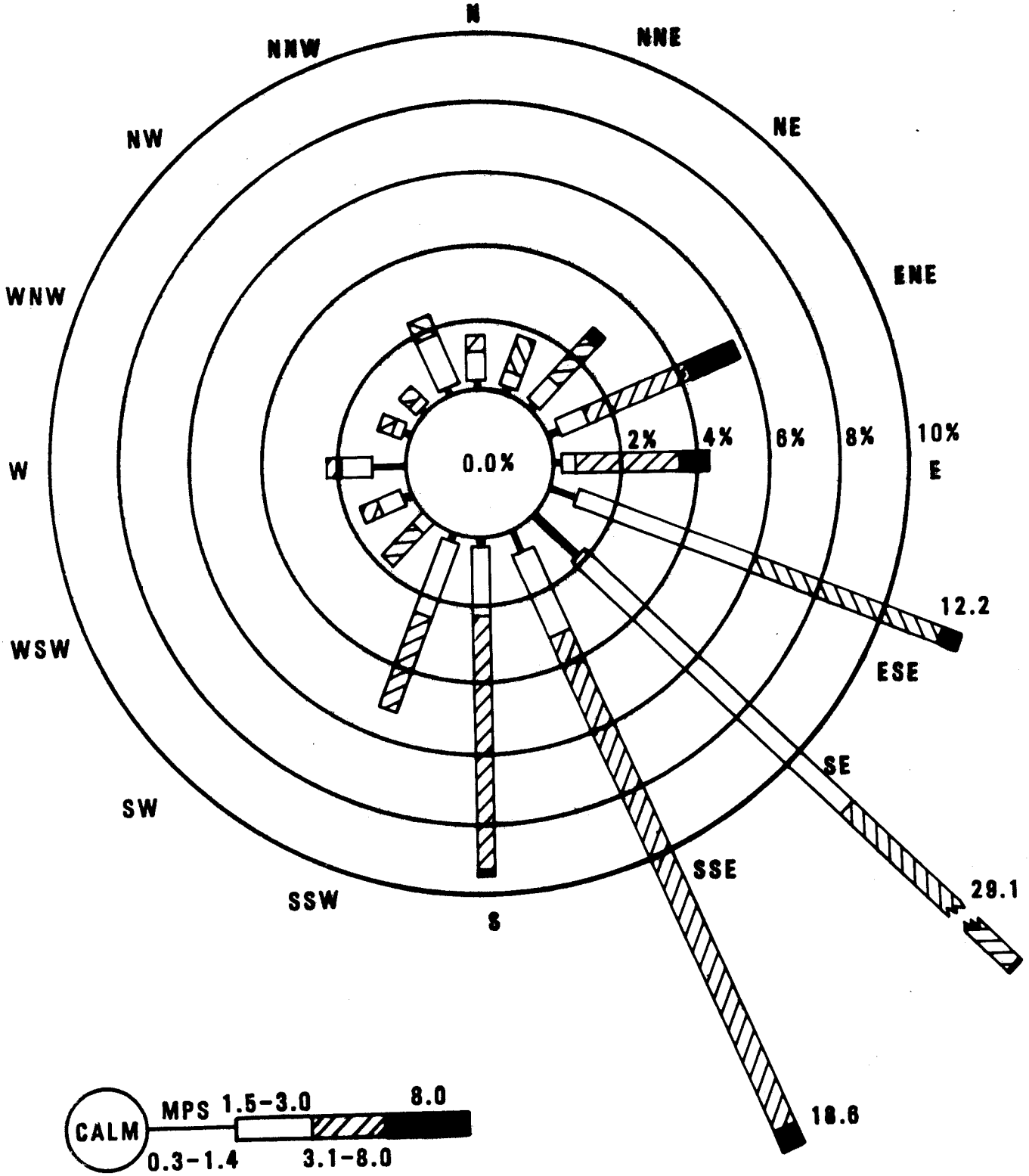

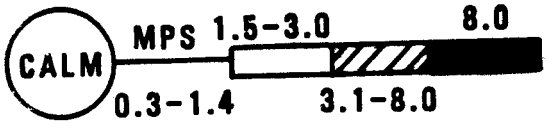

SPEED CLASS LEGEND

Bar Length Segments Are Proportional
To Indicated Speed Intervals Occurrence

WIPP WIND ROSE FOR
AUGUST 1977

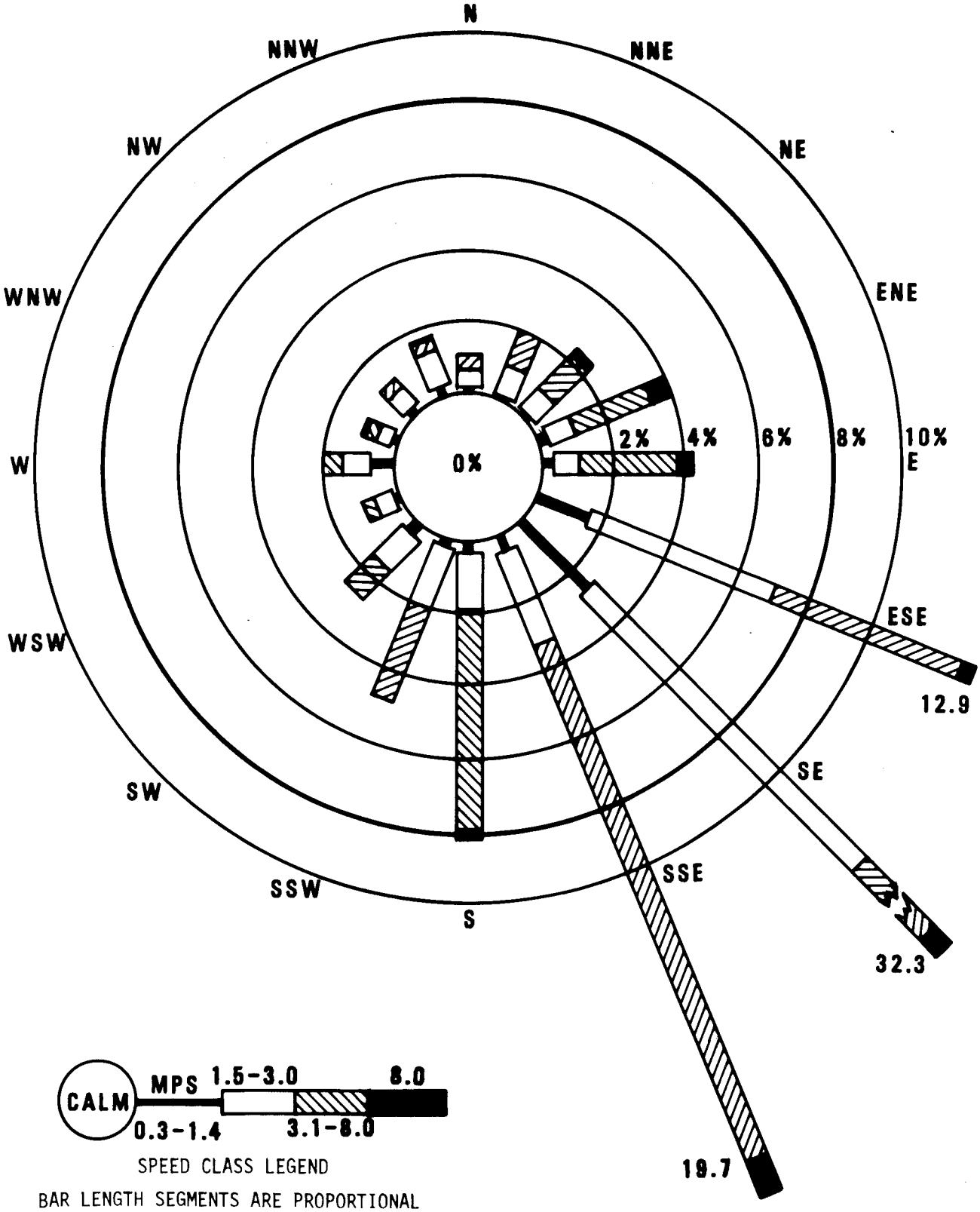

SPEED CLASS LEGEND

BAR LENGTH SEGMENTS ARE PROPORTIONAL
TO INDICATED SPEED INTERVALS OCCURRENCE

WIPP WIND ROSE FOR
SUMMER, 1977

DISTRIBUTION:

U. S. Department of Energy,
Headquarters
Office of Nuclear Waste Management
Washington, DC 20545
Eugene F. Beckett,
Project Coordinator (WIPP) (2)
Colin A. Heath, Director
Division of Waste Isolation (2)

U. S. Department of Energy,
Albuquerque Operations
P. O. Box 5400
Albuquerque, NM 87185
D. T. Schueler, Manager, WIPP
Project Office (3)
G. Dennis, Director, Public
Affairs Division
S. C. Taylor, C&TI Division

U. S. Department of Energy RL/C
Battelle Office of Nuclear Waste
Isolation
505 King Avenue
Columbus, OH 43201
Jeff O. Neff

Battelle Memorial Institute
Office of Nuclear Waste Isolation
505 King Avenue
Columbus, OH 43201
Neil Carter, General Manager (5)

U. S. Department of Energy
Carlsbad WIPP Project
Room 113, Federal Building
Carlsbad, NM 88220

U. S. Department of Energy (5)
Assistant Secretary for Environment
Washington, DC 20545

U. S. Environmental Protection
Agency
Office of Radiation Programs
Washington, DC 20460

Nuclear Regulatory Commission
Office of Standards Development
Washington, DC 20555

Nuclear Regulatory Commission
Office of Nuclear Reactor
Regulations
Washington, DC 20555
Attn: E. Markee

National Oceanic and Atmospheric
Administration
National Climatic Center
Asheville, NC 28801

National Oceanic and Atmospheric
Administration
Atmospheric Turbulence and
Diffusion Lab
Oak Ridge, TN 37830

National Academy of Sciences
WIPP Panel

Frank L. Parker, Chairman
Department of Environmental and
Water Resources Engineering
Vanderbilt University
Nashville, TN 37235

Konrad B. Krauskopf, Vice Chairman
Department of Geology
Stanford University
Stanford, CA 94305

Neville G. W. Cook, Member
Dept. of Material Sciences
and Engineering
Univ. of Calif. at Berkeley
Heart Mining Bldg. #320
Berkeley, CA 94720

Merril Eisenbud, Member
Inst. of Environmental Medicine
New York Univ. Medical Center
Box 817
Tuxedo, NY 10987

Fred M. Ernsberger, Member
Glass Research Center
PPG Industries, Inc.
Box 11472
Pittsburg, PA 15238

DISTRIBUTION (cont'd)

Roger Kasperson, Member
Center for Technology,
Environment and Development
Clark University
Worcester, MA 01610

Richard R. Parizek, Member
Department of Hydrogeology
Pennsylvania State University
University Park, PA 16802

Thomas H. Pigford, Member
Department of Nuclear Engr.
University of California
Berkeley, CA 94720

Roger W. Staehle, Member
Dean, Institute of Technology
University of Minnesota
Lind Hall
Minneapolis, MN 55455

John W. Winchester, Member
Department of Oceanography
Florida State University
Tallahassee, FL 32306

D'Arcy A. Shock, Consultant
233 Virginia
Ponca City, OK 74601

John T. Holloway, Exec. Sec.
2101 Constitution Ave. NW
Washington, DC 20418

Marvin H. Wilkening, Chairman (2)
New Mexico Advisory Committee
on WIPP
NMIMT Graduate Office
Socorro, NM 87801

Robert H. Neill, Director (2)
State of New Mexico
Environmental Evaluation Group
320 Marcy Street
P. O. Box 968
Santa Fe, NM 87503

NM Department of Energy
& Minerals
P. O. Box 2770
Santa Fe, NM 87503
Larry Kehoe, Secretary
Kasey LaPlante, Librarian

New Mexico Bureau of Mines &
Mineral Resources
Socorro, NM 87801
Attn: C. Rautman

New Mexico Environmental
Improvement Division (5)
P. O. Box 968
Santa Fe, NM 87503
Attn: Russell Rhoades
Ted Wolff
Kenneth M. Hargis
Bruce R. Nicholson

New Mexico Scientific
Laboratory System
700 Camino De Salud NE
Albuquerque, NM 87110
Attn: Aaron Bond

New Mexico State Engineer
Bataan Building
Santa Fe, NM 87501
Attn: Steve Reynolds

New Mexico State Geologist
P. O. Box 3860
Santa Fe, NM 87501
Attn: Emory C. Arnold

New Mexico State Planning Office
505 Don Gaspar
Santa Fe, NM 87503
Attn: Ms. Kate Wicks

Wayne Hansen, H-8
University of California
Los Alamos Scientific Laboratory
P. O. Box 1663
Los Alamos, NM 87544

Bruno Giletti, Co-Chairman
Department of Geological Sciences
Brown University
Providence, RI 02912

John Lyons
Department of Earth Sciences
Dartmouth College
Hanover, NH 03755

DISTRITBUTION (cont'd)

Raymond Siever, Co-Chairman
Department of Geological Sciences
Harvard University
Cambridge, MA 02138

A. L. Gennaro
Eastern New Mexico University
Portales, NM 88130

Bruce Wilson
New Mexico State University
P. O. Box 3805
Las Cruces, NM 88002

Lokesh Chaturvedi
Dept. of Civil Engineering
Box 3E
New Mexico State University
Las Cruces, NM 88003

G. P. Mulholland
Department of Mech. Engr.
New Mexico State University
P. O. Box 3450
Las Cruces, NM 88003

Ken Barnett, Physical
Science Lab
New Mexico State University
P. O. Box 3548
Las Cruces, NM 88003

William Pike
New Mexico State University
2900 Church Street
Carlsbad, NM 88220

Ray Bahm, Bureau of Engineering
Research
University of New Mexico
Albuquerque, NM 87131

Ivan Bennett, Department of
Geography
University of New Mexico
Albuquerque, NM 87131

George Pinder
Department of Civil Engineering
Princeton University
Princeton, NJ 08540

John Handin, Director
Center of Techtonophysics
Texas A & M University
College Station, TX 77840

WIPP Public Reading Room
Atomic Museum, Kirtland East AFB
Albuquerque, NM 87185
Attn: Ms. Gwynn Schreiner

WIPP Public Reading Room
Carlsbad Municipal Library
101 S. Hallagueno St.
Carlsbad, NM 88220
Attn: Lee Hubbard, Head Librarian

Thomas Brannigan Library
106 W. Hadley Street
Las Cruces, NM 88001
Attn: Don Dresp, Head Librarian

Roswell Public Library
301 N. Pennsylvania Avenue
Roswell, NM 88201
Attn: Ms. Nancy Langston

Hobbs Public Library
509 N. Ship St.
Hobbs, NM 88248
Attn: Ms. Marcia Lewis, Librarian

Amax Chemical Corporation
P. O. Box 279
Carlsbad, NM 88220

Duval Corporation
P. O. Box 511
Carlsbad, NM 88220
Attn: Mike Scroggins

International Minerals and
Chemical Corp.
Mine Site
Carlsbad, NM 88220

Kerr-McGee Chemical Company
P. O. Box 1120
Carlsbad, NM 88220

Mississippi Potash, Inc.
P. O. Box 101
Carlsbad, NM 88220

DISTRIBUTION (Cont'd)

National Potash Company
P. O. Box 731
Carlsbad, NM 88220

Potash Company of America
P. O. Box 31
Carlsbad, NM 88220

The Research Corporation
125 Silas Deane Highway
Wethersfield, CT 06109
Attn: L. P. Pocalujka (2)

R. C. Mairson (3)
Westinghouse Electric Corp.
P. O. Box 40039
Albuquerque, NM 87196

C. E. Buell
Science Applications, Inc.
2860 S. Circle Drive
Suite 2224
Colorado Springs, CO 80906

Ronald Lantz
1201 Dairy Ashford
Suite 200
Houston, TX 77079

1111 J. R. Banister
1112 C. R. Mehl
1110 J. D. Plimpton
1125 G. L. Ogle
Attn: J. T. McIlmoyle (3)
1130 H. E. Viney
1133 R. D. Statler
1135 P. D. Seward
1417 F. W. Muller
3161 W. R. Geer
3310 W. D. Burnett
3311 D. R. Parker
3311 L. W. Brewer (5)
3312 G. E. Tucker, Jr.
3312 J. H. Metcalf
3313 A. L. Stanley
3650 R. E. Hepplewhite
4500 E. H. Beckner
4510 W. D. Weart
4512 T. O. Hunter
4512 C. L. Christensen
4514 Sieglinde Neuhauser (12)
4514 M. L. Merritt
4551 E. L. Wilmot
4530 R. W. Lynch
4533 B. D. Zak
4533 H. W. Church (5)
4537 L. D. Tyler
4538 R. C. Lincoln
4540 M. L. Kramm
4541 L. W. Scully
4542 J. W. McKiernan
4542 Sandia WIPP Central Files (2)
4550 R. M. Jefferson
5112 P. S. Peercy
5511 D. F. McVey
5521 S. W. Key
5532 B. M. Butler
5812 C. J. M. Northrup, Jr.
8266 E. A. Aas
8275 P. K. Lovell
3141 T. L. Werner (5)
3151 W. L. Garner,
for: DOE/TIC (Unlimited Release) (3)
3154-3 R. P. Campbell,
for: DOE/TIC (25)

J. E. Magruder, Sandia
Carlsbad Representative
4011 N. Canal Street
Carlsbad, NM 88220

	Sum	77
10	aut	77
9	Wint	778
8	Spr	78
7	Sum	78
6	aut	78
5	Wint	789
4	Spr	79
3	Sum	79
2	aut	79
1	Wint	798

"MASTERS" MET SUMM 77
for SAND ~~80-7109~~
SAND 80-7107

********** WIPP METEOROLOGICAL DATA DAILY SUMMARY **********

DIR = VECTOR AVERAGE DIRECTION FROM WHICH THE WIND IS BLOWING, IN DEGREES

TURB INT = WIND TURBULANCE INTENSITY, IN RADIANS

SPD = VECTOR AVERAGE WIND SPEED, IN METERS PER SECOND

PEAK SPD = PEAK WIND SPEED WHICH OCCURRED DURING PERIOD, IN METERS PER SECOND

BAROM PRESS = BAROMETRIC PRESSURE, IN MILLIBARS

TEMPERATURES = AMBIENT TEMPERATURES AT INDICATED LEVEL, IN DEGREES CELSIUS

DELTA TEMPS = TEMPERATURE DIFFERENCES BETWEEN INDICATED LEVELS, IN DEGREES CELSIUS

STAB CLASS = PASQUILL CATEGORY DETERMINED FROM THE 30M-10M DELTA TEMPERATURE

DEW POINT = DEW POINT, IN DEGREES CELSIUS

REL HUM = RELATIVE HUMIDITY, IN PER CENT

PRCP = PRECIPATION AMOUNT DURING PERIOD, IN CENTIMETERS

SW SKY = SHORT WAVE SKY RADIATION, IN WATTS PER SQUARE METER

SW REF = SHORT WAVE REFLECTED RADIATION, IN WATTS PER SQUARE METER

LW SKY = LONG WAVE SKY RADIATION, IN WATTS PER SQUARE METER

LW REF = LONG WAVE REFLECTED RADIATION, IN WATTS PER SQUARE METER

ALL 9'S INDICATE MISSING DATA

****

---------- WIPP METEOROLOGICAL DATA DAILY SUMMARY FOR 6/ 1/77 ----------

JULIAN DAY.HR	3 METER WIND DIR	SPD	PEAK SPD	TURB INT	10 METER WIND DIR	SPD	PEAK SPD	TURB INT	30 METER WIND DIR	SPD	PEAK SPD	TURB INT	BAROM PRESS
152. 0	9999	3.5	14.5	99.99	42	4.3	11.5	99.99	50	6.0	14.8	99.99	900.3
152. 1	9999	6.5	11.5	99.99	72	6.9	16.0	99.99	77	13.5	18.0	99.99	901.0
152. 2	9999	6.5	8.0	99.99	36	7.2	13.0	99.99	40	11.0	16.5	99.99	901.6
152. 3	9999	7.5	9.0	99.99	48	9.9	12.5	99.99	45	12.5	15.3	99.99	897.8
152. 4	9999	4.0	6.0	99.99	54	5.6	10.5	99.99	61	7.0	13.5	99.99	897.6
152. 5	9999	4.0	7.0	99.99	72	6.0	9.0	99.99	72	6.0	10.5	99.99	897.6
152. 6	184	2.0	9.0	99.99	210	3.6	10.0	99.99	211	5.0	10.5	99.99	898.5
152. 7	167	1.0	2.5	99.99	180	2.3	4.0	99.99	205	3.3	5.3	99.99	898.5
152. 8	157	1.0	1.5	99.99	168	1.5	2.0	99.99	194	2.0	3.3	99.99	899.1
152. 9	216	1.5	2.5	99.99	222	1.2	2.5	99.99	227	1.5	2.8	99.99	899.4
152.10	189	2.5	3.5	99.99	204	2.1	4.5	99.99	203	3.0	4.1	99.99	899.4
152.11	151	2.0	4.5	99.99	168	2.2	5.0	99.99	173	2.5	5.0	99.99	899.2
152.12	146	2.0	4.0	99.99	150	3.4	4.5	99.99	146	2.8	4.5	99.99	898.8
152.13	135	1.5	4.0	99.99	162	1.9	4.0	99.99	130	2.0	4.8	99.99	898.1
152.14	124	2.5	5.0	99.99	144	2.6	6.0	99.99	151	3.0	6.5	99.99	897.3
152.15	130	1.5	7.5	99.99	90	1.5	8.0	99.99	97	3.3	7.0	99.99	896.3
152.16	119	1.5	4.5	99.99	126	0.9	8.0	99.99	124	2.5	5.0	99.99	895.3
152.17	119	2.0	4.5	99.99	126	2.5	5.5	99.99	119	4.0	5.5	99.99	894.6
152.18	113	1.5	4.0	99.99	114	1.6	4.5	99.99	108	3.0	5.5	99.99	894.0
152.19	108	1.0	3.5	99.99	114	0.9	4.5	99.99	119	2.5	5.3	99.99	894.0
152.20	86	1.5	2.0	99.99	114	2.5	3.5	99.99	113	2.8	3.5	99.99	894.0
152.21	92	2.0	2.5	99.99	114	4.1	4.5	99.99	113	3.5	4.3	99.99	894.3
152.22	97	3.0	4.5	99.99	114	4.5	6.5	99.99	108	7.0	8.3	99.99	894.4
152.23	97	3.5	5.0	99.99	108	5.2	8.0	99.99	108	7.0	8.5	99.99	894.8

JULIAN DAY.HR	TEMPERATURES 3 M	10 M	30 M	DELTA TEMPS 10-3	30-3	30-10	STAB CLASS	DEW POINT	REL HUM	PRCP	RADIATION PARAMETERS SW SKY	SW REF	LW SKY	LW REF
152. 0	999.9	18.7	999.9	99.99	99.99	99.99		999.9	9999	0.00	0	0	9999	406
152. 1	999.9	19.4	999.9	99.99	99.99	99.99		999.9	9999	0.00	0	0	9999	403
152. 2	999.9	17.6	999.9	99.99	99.99	99.99		999.9	9999	0.00	0	0	9999	398
152. 3	999.9	17.8	999.9	99.99	99.99	99.99		999.9	9999	0.00	2	0	9999	400
152. 4	999.9	18.0	999.9	99.99	99.99	99.99		999.9	9999	0.00	0	0	9999	399
152. 5	999.9	20.1	999.9	99.99	99.99	99.99		999.9	9999	0.00	0	0	9999	403
152. 6	999.9	18.1	999.9	99.99	99.99	99.99		999.9	9999	0.00	3	0	9999	396
152. 7	999.9	17.2	999.9	99.99	99.99	99.99		999.9	9999	0.00	70	12	9999	400
152. 8	999.9	18.5	999.9	99.99	99.99	99.99		999.9	9999	0.00	160	30	9999	416
152. 9	999.9	21.7	999.9	99.99	99.99	99.99		999.9	9999	0.00	652	127	9999	458
152.10	999.9	24.0	999.9	99.99	99.99	99.99		999.9	9999	0.00	826	156	9999	473
152.11	999.9	24.8	999.9	99.99	99.99	99.99		999.9	9999	0.00	1031	199	9999	492
152.12	999.9	25.2	999.9	99.99	99.99	99.99		999.9	9999	0.00	928	173	9999	493
152.13	999.9	26.8	999.9	99.99	99.99	99.99		999.9	9999	0.00	1012	193	9999	531
152.14	999.9	28.1	999.9	99.99	99.99	99.99		999.9	9999	0.00	978	190	9999	520
152.15	999.9	29.0	999.9	99.99	99.99	99.99		999.9	9999	0.00	878	176	9999	539
152.16	999.9	30.1	999.9	99.99	99.99	99.99		999.9	9999	0.00	723	149	9999	522
152.17	999.9	30.2	999.9	99.99	99.99	99.99		999.9	9999	0.00	540	115	9999	507
152.18	999.9	30.5	999.9	99.99	99.99	99.99		999.9	9999	0.03	327	71	9999	489
152.19	999.9	29.6	999.9	99.99	99.99	99.99		999.9	9999	0.00	117	27	9999	475
152.20	999.9	28.3	999.9	99.99	99.99	99.99		999.9	9999	0.00	0	0	9999	432
152.21	999.9	25.9	999.9	99.99	99.99	99.99		999.9	9999	0.00	0	0	9999	432
152.22	999.9	25.2	999.9	99.99	99.99	99.99		999.9	9999	0.00	0	0	9999	438
152.23	999.9	24.0	999.9	99.99	99.99	99.99		999.9	9999	0.00	0	0	9999	430

---------- DAILY SUMMARIES ----------

3 METER TEMP --- AVG = 999.9 MAX = 999.9 MIN = 999.9 AVG DEW POINT = 999.9 TOTAL PRCP = 0.03

10 METER WINDS -- AVG SPEED = 2.3 AVG DIR = 95 PEAK SPEED = 16.0 , OCCURRED DURING HOUR 1

NUMBER OF HOURS PER STABILITY CLASS A = 0 , B = 0, C = 0, D = 0, E = 0, F = 0, G = 0

WIPP METEOROLOGICAL DATA DAILY SUMMARY FOR 6/ 2/77

JULIAN DAY.HR	3 METER WIND DIR	SPD	PEAK SPD	TURB INT	10 METER WIND DIR	SPD	PEAK SPD	TURB INT	30 METER WIND DIR	SPD	PEAK SPD	TURB INT	BAROM PRESS
153. 0	103	2.5	4.5	99.99	114	2.9	6.0	99.99	119	5.8	8.5	99.99	894.8
153. 1	108	3.0	4.5	99.99	126	1.9	5.5	99.99	119	6.5	8.0	99.99	894.8
153. 2	103	3.0	5.0	99.99	120	4.0	6.0	99.99	113	6.5	7.9	99.99	894.8
153. 3	103	2.5	5.0	99.99	120	2.4	3.5	99.99	119	6.0	7.9	99.99	894.8
153. 4	108	2.0	4.5	99.99	114	2.0	6.0	99.99	124	7.0	8.5	99.99	894.8
153. 5	151	1.0	3.0	99.99	120	2.0	6.3	99.99	146	3.0	8.1	99.99	894.8
153. 6	9999	1.0	3.0	99.99	126	0.7	5.5	99.99	178	1.9	6.5	99.99	895.0
153. 7	9999	2.5	4.0	99.99	198	2.7	5.0	99.99	29	5.5	6.5	99.99	895.4
153. 8	167	0.8	5.0	99.99	252	1.0	5.5	99.99	178	1.0	7.0	99.99	895.5
153. 9	135	1.0	2.5	99.99	30	1.5	6.8	99.99	130	1.5	3.0	99.99	895.5
153.10	81	0.8	1.5	99.99	9999	999.9	999.9	99.99	50	1.5	3.8	99.99	9999.0
153.11	92	1.0	2.0	99.99	9999	999.9	999.9	99.99	86	1.0	3.5	99.99	9999.0
153.12	108	1.5	3.0	99.99	90	1.8	2.0	99.99	108	2.9	3.3	99.99	895.0
153.13	130	4.0	7.0	99.99	72	4.6	2.5	99.99	130	4.8	8.0	99.99	894.1
153.14	108	3.5	7.5	99.99	120	4.2	3.5	99.99	124	4.5	8.3	99.99	893.9
153.15	151	3.5	5.5	99.99	72	4.0	4.0	99.99	173	5.0	7.0	99.99	893.2
153.16	9999	999.9	999.9	99.99	114	2.7	5.5	99.99	103	2.5	8.0	99.99	892.4
153.17	9999	999.9	999.9	99.99	162	2.4	8.0	99.99	184	4.0	8.3	99.99	892.0
153.18	9999	999.9	999.9	99.99	126	2.6	5.5	99.99	140	5.0	8.0	99.99	891.8
153.19	9999	999.9	999.9	99.99	108	2.4	6.5	99.99	113	4.0	7.0	99.99	891.8
153.20	9999	999.9	999.9	99.99	108	2.0	3.0	99.99	135	4.8	5.5	99.99	892.1
153.21	9999	999.9	999.9	99.99	108	0.7	4.0	99.99	135	6.8	7.3	99.99	892.4
153.22	9999	999.9	999.9	99.99	120	1.7	2.5	99.99	135	7.0	8.5	99.99	893.0
153.23	9999	999.9	999.9	99.99	108	2.2	5.0	99.99	122	5.5	8.5	99.99	893.6

JULIAN DAY.HR	TEMPERATURES 3 M	10 M	30 M	DELTA TEMPS 10-3	30-3	30-10	STAB CLASS	DEW POINT	REL HUM	PRCP	RADIATION PARAMETERS SW SKY	SW REF	LW SKY	LW REF
153. 0	999.9	23.0	999.9	99.99	99.99	99.99		999.9	9999	0.00	0	0	9999	426
153. 1	999.9	22.0	999.9	99.99	99.99	99.99		999.9	9999	0.00	0	0	9999	420
153. 2	999.9	20.7	999.9	99.99	99.99	99.99		999.9	9999	0.00	0	0	9999	413
153. 3	999.9	20.3	999.9	99.99	99.99	99.99		999.9	9999	0.00	0	0	9999	412
153. 4	999.9	19.5	999.9	99.99	99.99	99.99		999.9	9999	0.00	0	0	9999	407
153. 5	999.9	19.1	999.9	99.99	99.99	99.99		999.9	9999	0.00	0	0	9999	400
153. 6	999.9	18.3	999.9	99.99	99.99	99.99		999.9	9999	0.00	12	3	9999	395
153. 7	999.9	19.3	999.9	99.99	99.99	99.99		999.9	9999	0.00	168	41	9999	416
153. 8	999.9	22.4	999.9	99.99	99.99	99.99		999.9	9999	0.00	379	84	9999	442
153. 9	999.9	24.5	999.9	99.99	99.99	99.99		999.9	9999	0.00	593	127	9999	472
153.10	999.9	999.9	999.9	99.99	99.99	99.99		999.9	9999	99.99	9999	9999	9999	9999
153.11	999.9	999.9	999.9	99.99	99.99	99.99		999.9	9999	99.99	9999	9999	9999	9999
153.12	999.9	30.9	999.9	99.99	99.99	99.99		999.9	9999	0.00	999	201	9999	559
153.13	999.9	31.8	999.9	99.99	99.99	99.99		999.9	9999	0.00	1038	208	9999	556
153.14	999.9	32.6	999.9	99.99	99.99	99.99		999.9	9999	0.00	1005	205	9999	567
153.15	999.9	33.1	999.9	99.99	99.99	99.99		999.9	9999	0.00	887	185	9999	291
153.16	999.9	32.8	999.9	99.99	99.99	99.99		999.9	9999	0.00	742	159	9999	546
153.17	999.9	33.2	999.9	99.99	99.99	99.99		999.9	9999	0.00	550	120	9999	533
153.18	999.9	32.8	999.9	99.99	99.99	99.99		999.9	9999	0.00	326	73	9999	503
153.19	999.9	31.5	999.9	99.99	99.99	99.99		999.9	9999	0.00	114	27	9999	484
153.20	999.9	28.4	999.9	99.99	99.99	99.99		999.9	9999	0.00	0	0	9999	441
153.21	999.9	26.4	999.9	99.99	99.99	99.99		999.9	9999	0.00	0	0	9999	439
153.22	999.9	25.2	999.9	99.99	99.99	99.99		999.9	9999	0.00	0	0	9999	433
153.23	999.9	24.1	999.9	99.99	99.99	99.99		999.9	9999	0.00	0	0	9999	426

DAILY SUMMARIES

3 METER TEMP --- AVG = 999.9 MAX = 999.9 MIN = 999.9 AVG DEW POINT = 999.9 TOTAL PRCP = 0.00

10 METER WINDS -- AVG SPEED = 2.0 AVG DIR = 113 PEAK SPEED = 8.0 , OCCURRED DURING HOUR 17

NUMBER OF HOURS PER STABILITY CLASS A = 0 , B = 0, C = 0, D = 0, E = 0, F = 0, G = 0

WIPP METEOROLOGICAL DATA DAILY SUMMARY FOR 6/ 3/77

JULIAN DAY.HR	3 METER WIND DIR	3 METER WIND SPD	3 METER WIND PEAK SPD	3 METER WIND TURB INT	10 METER WIND DIR	10 METER WIND SPD	10 METER WIND PEAK SPD	10 METER WIND TURB INT	30 METER WIND DIR	30 METER WIND SPD	30 METER WIND PEAK SPD	30 METER WIND TURB INT	BAROM PRESS
154. 0	9999	999.9	999.9	99.99	114	2.0	4.5	99.99	130	5.8	7.8	99.99	893.7
154. 1	9999	999.9	999.9	99.99	138	4.6	9.0	99.99	138	8.0	11.0	99.99	893.9
154. 2	9999	999.9	999.9	99.99	144	6.0	3.5	99.99	138	8.0	11.0	99.99	893.9
154. 3	9999	999.9	999.9	99.99	144	4.8	8.5	99.99	151	6.5	10.0	99.99	893.9
154. 4	9999	999.9	999.9	99.99	132	3.1	6.5	99.99	151	6.5	10.0	99.99	893.9
154. 5	9999	999.9	999.9	99.99	120	2.5	5.0	99.99	130	6.8	7.5	99.99	893.9
154. 6	9999	999.9	999.9	99.99	120	1.9	5.0	99.99	127	5.5	7.5	99.99	894.4
154. 7	9999	999.9	999.9	99.99	114	1.7	4.0	99.99	127	5.3	7.0	99.99	894.6
154. 8	9999	999.9	999.9	99.99	126	2.1	5.5	99.99	119	4.5	7.3	99.99	895.2
154. 9	9999	999.9	999.9	99.99	144	4.6	6.0	99.99	151	5.0	6.5	99.99	895.5
154.10	9999	999.9	999.9	99.99	144	5.7	9.5	99.99	151	6.5	10.5	99.99	895.6
154.11	9999	999.9	999.9	99.99	114	3.9	9.5	99.99	124	7.0	10.0	99.99	895.7
154.12	9999	999.9	999.9	99.99	120	5.4	10.0	99.99	130	6.5	10.8	99.99	895.7
154.13	9999	999.9	999.9	99.99	126	4.0	9.0	99.99	159	6.0	10.5	99.99	894.9
154.14	9999	999.9	999.9	99.99	114	6.3	9.5	99.99	108	5.5	10.3	99.99	894.3
154.15	9999	999.9	999.9	99.99	132	4.4	10.5	99.99	140	7.0	10.8	99.99	893.6
154.16	119	2.0	5.0	99.99	126	4.2	11.5	99.99	108	6.5	12.5	99.99	893.2
154.17	162	2.0	6.5	99.99	126	3.1	12.0	99.99	124	9.5	13.8	99.99	892.8
154.18	130	3.0	4.5	99.99	138	7.0	10.5	99.99	140	7.5	12.0	99.99	892.8
154.19	103	1.5	5.5	99.99	114	2.2	8.0	99.99	122	6.0	10.5	99.99	892.8
154.20	97	1.5	2.5	99.99	114	2.1	4.5	99.99	124	6.3	8.3	99.99	893.5
154.21	113	1.3	2.5	99.99	114	1.5	4.0	99.99	122	6.5	8.0	99.99	894.3
154.22	113	1.0	2.0	99.99	126	2.8	8.5	99.99	124	7.5	9.8	99.99	895.0
154.23	103	2.0	3.5	99.99	126	7.1	10.5	99.99	124	8.0	12.3	99.99	895.7

JULIAN DAY.HR	TEMPERATURES 3 M	TEMPERATURES 10 M	TEMPERATURES 30 M	DELTA TEMPS 10-3	DELTA TEMPS 30-3	DELTA TEMPS 30-10	STAB CLASS	DEW POINT	REL HUM	PRCP	RADIATION PARAMETERS SW SKY	SW REF	LW SKY	LW REF
154. 0	999.9	23.3	999.9	99.99	99.99	99.99		999.9	9999	0.00	0	0	9999	425
154. 1	999.9	24.0	999.9	99.99	99.99	99.99		999.9	9999	0.00	0	0	9999	430
154. 2	999.9	23.3	999.9	99.99	99.99	99.99		999.9	9999	0.00	0	0	9999	428
154. 3	999.9	22.5	999.9	99.99	99.99	99.99		999.9	9999	0.00	0	0	9999	423
154. 4	999.9	21.6	999.9	99.99	99.99	99.99		999.9	9999	0.00	0	0	9999	416
154. 5	999.9	20.3	999.9	99.99	99.99	99.99		999.9	9999	0.00	0	0	9999	409
154. 6	999.9	20.3	999.9	99.99	99.99	99.99		999.9	9999	0.00	12	4	9999	411
154. 7	999.9	20.6	999.9	99.99	99.99	99.99		999.9	9999	0.00	177	43	9999	426
154. 8	999.9	23.7	999.9	99.99	99.99	99.99		999.9	9999	0.00	394	90	9999	447
154. 9	999.9	26.1	999.9	99.99	99.99	99.99		999.9	9999	0.00	604	133	9999	482
154.10	999.9	27.6	999.9	99.99	99.99	99.99		999.9	9999	0.00	800	171	9999	506
154.11	999.9	28.9	999.9	99.99	99.99	99.99		999.9	9999	0.00	932	195	9999	527
154.12	999.9	29.9	999.9	99.99	99.99	99.99		999.9	9999	0.00	1007	209	9999	563
154.13	999.9	31.0	999.9	99.99	99.99	99.99		999.9	9999	0.00	1046	216	9999	563
154.14	999.9	32.5	999.9	99.99	99.99	99.99		999.9	9999	0.00	1004	209	9999	571
154.15	999.9	32.7	999.9	99.99	99.99	99.99		999.9	9999	0.00	894	190	9999	566
154.16	999.9	32.5	999.9	99.99	99.99	99.99		999.9	9999	0.00	768	168	9999	549
154.17	999.9	32.6	999.9	99.99	99.99	99.99		999.9	9999	0.00	562	127	9999	529
154.18	999.9	31.9	999.9	99.99	99.99	99.99		999.9	9999	0.00	204	44	9999	494
154.19	999.9	30.4	999.9	99.99	99.99	99.99		999.9	9999	0.00	59	14	9999	472
154.20	999.9	28.5	999.9	99.99	99.99	99.99		999.9	9999	0.00	0	0	9999	455
154.21	999.9	26.2	999.9	99.99	99.99	99.99		999.9	9999	0.00	0	0	9999	443
154.22	999.9	26.4	999.9	99.99	99.99	99.99		999.9	9999	0.00	0	0	9999	445
154.23	999.9	25.6	999.9	99.99	99.99	99.99		999.9	9999	0.00	0	0	9999	443

DAILY SUMMARIES

3 METER TEMP --- AVG = 999.9 MAX = 999.9 MIN = 999.9 AVG DEW POINT = 999.9 TOTAL PRCP = 0.00

10 METER WINDS -- AVG SPEED = 3.8 AVG DIR = 129 PEAK SPEED = 12.0 , OCCURRED DURING HOUR 17

NUMBER OF HOURS PER STABILITY CLASS A = 0 , B = 0, C = 0, D = 0, E = 0, F = 0, G = 0

WIPP METEOROLOGICAL DATA DAILY SUMMARY FOR 6/ 4/77

JULIAN DAY.HR	3 METER WIND DIR	SPD	PEAK SPD	TURB INT	10 METER WIND DIR	SPD	PEAK SPD	TURB INT	30 METER WIND DIR	SPD	PEAK SPD	TURB INT	BAROM PRESS
155. 0	108	1.8	3.5	99.99	132	5.5	11.0	99.99	138	8.0	11.5	99.99	896.5
155. 1	135	3.5	6.5	99.99	144	5.6	8.0	99.99	140	6.0	10.0	99.99	896.5
155. 2	146	4.0	7.0	99.99	150	1.9	7.0	99.99	151	2.5	8.0	99.99	896.9
155. 3	146	3.0	6.0	99.99	144	2.9	5.0	99.99	157	4.0	6.5	99.99	897.2
155. 4	135	2.0	5.5	99.99	114	2.4	4.5	99.99	124	5.3	6.3	99.99	897.2
155. 5	135	2.0	3.5	99.99	108	2.3	4.5	99.99	113	5.0	8.0	99.99	897.2
155. 6	135	1.0	2.5	99.99	108	3.4	6.0	99.99	108	6.5	8.0	99.99	897.2
155. 7	130	2.0	3.5	99.99	114	2.8	6.5	99.99	113	4.9	8.5	99.99	897.6
155. 8	130	2.0	4.5	99.99	132	4.9	9.5	99.99	130	6.0	9.0	99.99	898.4
155. 9	146	3.5	5.5	99.99	150	4.6	6.5	99.99	173	5.5	7.3	99.99	898.3
155.10	135	5.0	8.5	99.99	132	3.7	6.5	99.99	135	4.0	7.0	99.99	898.3
155.11	130	3.5	8.0	99.99	144	1.8	5.5	99.99	178	2.5	5.8	99.99	898.4
155.12	140	4.5	8.5	99.99	132	2.0	6.5	99.99	124	4.3	6.5	99.99	898.3
155.13	124	4.5	8.0	99.99	138	3.4	8.5	99.99	146	5.5	8.5	99.99	898.1
155.14	140	5.0	8.0	99.99	132	3.9	9.5	99.99	124	7.0	11.0	99.99	897.7
155.15	119	3.5	8.0	99.99	114	5.4	10.5	99.99	113	7.0	10.5	99.99	897.4
155.16	97	4.5	10.0	99.99	114	4.8	9.5	99.99	140	7.8	12.0	99.99	897.0
155.17	108	4.0	9.5	99.99	120	6.7	10.0	99.99	124	6.0	11.0	99.99	896.8
155.18	135	4.5	8.0	99.99	126	5.6	10.5	99.99	124	7.5	11.5	99.99	896.6
155.19	119	2.5	6.5	99.99	132	6.8	11.0	99.99	135	9.8	12.0	99.99	896.7
155.20	130	1.5	4.0	99.99	138	5.9	11.0	99.99	140	8.0	11.3	99.99	897.3
155.21	119	1.5	3.0	99.99	132	5.4	8.5	99.99	140	7.0	10.5	99.99	898.1
155.22	130	3.0	6.0	99.99	138	4.0	7.0	99.99	138	5.8	8.5	99.99	899.1
155.23	135	4.5	7.5	99.99	144	5.2	8.5	99.99	151	7.5	8.5	99.99	899.4

JULIAN DAY.HR	TEMPERATURES 3 M	10 M	30 M	DELTA TEMPS 10-3	30-3	30-10	STAB CLASS	DEW POINT	REL HUM	PRCP	RADIATION PARAMETERS SW SKY	SW REF	LW SKY	LW REF
155. 0	999.9	24.4	999.9	99.99	99.99	99.99		999.9	9999	0.00	0	0	9999	436
155. 1	999.9	23.2	999.9	99.99	99.99	99.99		999.9	9999	0.00	0	0	9999	429
155. 2	999.9	21.9	999.9	99.99	99.99	99.99		999.9	9999	0.00	0	0	9999	415
155. 3	999.9	20.3	999.9	99.99	99.99	99.99		999.9	9999	0.65	0	0	9999	408
155. 4	999.9	19.5	999.9	99.99	99.99	99.99		999.9	9999	0.00	0	0	9999	407
155. 5	999.9	18.9	999.9	99.99	99.99	99.99		999.9	9999	0.00	0	0	9999	403
155. 6	999.9	18.6	999.9	99.99	99.99	99.99		999.9	9999	0.00	14	4	9999	404
155. 7	999.9	19.2	999.9	99.99	99.99	99.99		999.9	9999	0.00	192	48	9999	423
155. 8	999.9	20.9	999.9	99.99	99.99	99.99		999.9	9999	0.00	159	34	9999	429
155. 9	999.9	22.6	999.9	99.99	99.99	99.99		999.9	9999	0.00	298	64	9999	451
155.10	999.9	24.3	999.9	99.99	99.99	99.99		999.9	9999	0.00	486	114	9999	486
155.11	999.9	26.4	999.9	99.99	99.99	99.99		999.9	9999	0.00	955	203	9999	542
155.12	999.9	27.9	999.9	99.99	99.99	99.99		999.9	9999	0.00	1123	237	9999	558
155.13	999.9	28.4	999.9	99.99	99.99	99.99		999.9	9999	0.00	1081	226	9999	561
155.14	999.9	30.3	999.9	99.99	99.99	99.99		999.9	9999	0.00	891	196	9999	553
155.15	999.9	30.8	999.9	99.99	99.99	99.99		999.9	9999	0.00	758	163	9999	540
155.16	999.9	31.0	999.9	99.99	99.99	99.99		999.9	9999	0.00	727	163	9999	532
155.17	999.9	30.6	999.9	99.99	99.99	99.99		999.9	9999	0.00	589	134	9999	520
155.18	999.9	30.1	999.9	99.99	99.99	99.99		999.9	9999	0.00	341	81	9999	496
155.19	999.9	28.8	999.9	99.99	99.99	99.99		999.9	9999	0.00	99	25	9999	471
155.20	999.9	27.0	999.9	99.99	99.99	99.99		999.9	9999	0.00	0	0	9999	450
155.21	999.9	25.3	999.9	99.99	99.99	99.99		999.9	9999	0.00	0	0	9999	438
155.22	999.9	23.5	999.9	99.99	99.99	99.99		999.9	9999	0.00	0	0	9999	426
155.23	999.9	22.9	999.9	99.99	99.99	99.99		999.9	9999	0.00	0	0	9999	424

DAILY SUMMARIES

3 METER TEMP --- AVG = 999.9 MAX = 999.9 MIN = 999.9 AVG DEW POINT = 999.9 TOTAL PRCP = 0.65

10 METER WINDS -- AVG SPEED = 4.1 AVG DIR = 131 PEAK SPEED = 11.0 , OCCURRED DURING HOUR 0

NUMBER OF HOURS PER STABILITY CLASS A = 0 , B = 0, C = 0, D = 0, E = 0, F = 0, G = 0

WIPP METEOROLOGICAL DATA DAILY SUMMARY FOR 6/ 5/77

JULIAN DAY.HR	3 METER WIND DIR	SPD	PEAK SPD	TURB INT	10 METER WIND DIR	SPD	PEAK SPD	TURB INT	30 METER WIND DIR	SPD	PEAK SPD	TURB INT	BAROM PRESS
156. 0	135	4.0	8.5	99.99	144	4.5	6.0	99.99	149	6.3	8.0	99.99	899.8
156. 1	140	4.0	7.0	99.99	132	3.8	5.0	99.99	143	5.3	7.5	99.99	899.9
156. 2	157	1.0	5.5	99.99	132	3.6	6.0	99.99	146	5.5	7.3	99.99	900.0
156. 3	146	1.3	2.5	99.99	120	0.8	3.5	99.99	135	4.5	6.0	99.99	900.2
156. 4	103	1.3	2.5	99.99	126	2.3	4.0	99.99	135	6.0	7.0	99.99	900.2
156. 5	643	2.0	3.5	99.99	126	4.3	6.0	99.99	140	6.8	8.0	99.99	900.2
156. 6	103	3.0	5.0	99.99	126	3.6	6.5	99.99	135	7.0	8.0	99.99	900.2
156. 7	108	2.5	5.0	99.99	126	3.0	6.0	99.99	135	6.0	8.5	99.99	900.2
156. 8	140	4.0	7.5	99.99	144	5.1	7.0	99.99	151	5.0	7.5	99.99	900.6
156. 9	135	4.0	9.5	99.99	150	4.8	9.5	99.99	140	6.3	9.3	99.99	900.7
156.10	130	3.0	6.5	99.99	168	6.0	8.5	99.99	157	6.0	9.5	99.99	900.6
156.11	108	2.5	5.0	99.99	144	3.5	8.5	99.99	151	6.5	7.8	99.99	900.7
156.12	135	2.5	6.0	99.99	120	4.9	14.0	99.99	167	4.3	9.3	99.99	900.4
156.13	146	3.5	7.5	99.99	120	4.3	9.5	99.99	108	4.0	9.0	99.99	899.8
156.14	130	4.5	8.5	99.99	126	3.5	11.5	99.99	119	4.8	12.5	99.99	899.2
156.15	130	4.0	9.0	99.99	72	5.8	9.0	99.99	81	6.0	9.8	99.99	898.7
156.16	140	4.5	8.0	99.99	96	4.6	8.0	99.99	103	5.5	9.5	99.99	898.0
156.17	140	5.0	9.0	99.99	120	3.4	7.0	99.99	113	4.5	8.0	99.99	897.6
156.18	124	4.0	8.5	99.99	114	4.5	8.0	99.99	119	5.5	10.0	99.99	897.2
156.19	130	5.5	8.0	99.99	126	1.4	6.5	99.99	108	4.3	8.0	99.99	897.0
156.20	140	4.0	8.0	99.99	114	2.7	4.5	99.99	119	4.8	7.0	99.99	897.1
156.21	135	3.3	7.0	99.99	108	3.6	5.0	99.99	124	7.0	8.0	99.99	897.4
156.22	135	3.0	5.5	99.99	114	3.7	4.5	99.99	116	5.8	7.5	99.99	898.0
156.23	146	3.8	7.0	99.99	114	2.1	4.5	99.99	119	6.0	7.0	99.99	898.3

JULIAN DAY.HR	TEMPERATURES 3 M	10 M	30 M	DELTA TEMPS 10-3	30-3	30-10	STAB CLASS	DEW POINT	REL HUM	PRCP	RADIATION PARAMETERS SW SKY	SW REF	LW SKY	LW REF
156. 0	999.9	20.8	999.9	99.99	99.99	99.99		999.9	9999	0.00	0	0	9999	412
156. 1	999.9	19.8	999.9	99.99	99.99	99.99		999.9	9999	0.00	0	0	9999	406
156. 2	999.9	18.9	999.9	99.99	99.99	99.99		999.9	9999	0.00	0	0	9999	400
156. 3	999.9	18.0	999.9	99.99	99.99	99.99		999.9	9999	0.00	0	0	9999	392
156. 4	999.9	1.6	999.9	99.99	99.99	99.99		999.9	9999	0.00	0	0	9999	393
156. 5	999.9	17.9	999.9	99.99	99.99	99.99		999.9	9999	0.00	0	0	9999	397
156. 6	999.9	17.4	999.9	99.99	99.99	99.99		999.9	9999	0.00	12	3	9999	396
156. 7	999.9	19.0	999.9	99.99	99.99	99.99		999.9	9999	0.00	173	44	9999	417
156. 8	999.9	21.3	999.9	99.99	99.99	99.99		999.9	9999	0.00	387	90	9999	437
156. 9	999.9	27.9	999.9	99.99	99.99	99.99		999.9	9999	0.00	597	134	9999	465
156.10	999.9	24.1	999.9	99.99	99.99	99.99		999.9	9999	0.00	785	172	9999	492
156.11	999.9	25.3	999.9	99.99	99.99	99.99		999.9	9999	0.00	934	199	9999	533
156.12	999.9	26.0	999.9	99.99	99.99	99.99		999.9	9999	0.00	1007	213	9999	544
156.13	999.9	26.8	999.9	99.99	99.99	99.99		999.9	9999	0.00	1035	218	9999	554
156.14	999.9	28.4	999.9	99.99	99.99	99.99		999.9	9999	0.00	984	207	9999	552
156.15	999.9	28.5	999.9	99.99	99.99	99.99		999.9	9999	0.00	890	193	9999	12
156.16	999.9	29.2	999.9	99.99	99.99	99.99		999.9	9999	0.00	736	163	9999	542
156.17	999.9	29.0	999.9	99.99	99.99	99.99		999.9	9999	0.00	539	123	9999	513
156.18	999.9	28.7	999.9	99.99	99.99	99.99		999.9	9999	0.00	327	76	9999	489
156.19	999.9	28.1	999.9	99.99	99.99	99.99		999.9	9999	0.00	118	30	9999	471
156.20	999.9	25.2	999.9	99.99	99.99	99.99		999.9	9999	0.00	0	0	9999	431
156.21	999.9	22.9	999.9	99.99	99.99	99.99		999.9	9999	0.00	0	0	9999	422
156.22	999.9	21.5	999.9	99.99	99.99	99.99		999.9	9999	0.00	0	0	9999	415
156.23	999.9	21.2	999.9	99.99	99.99	99.99		999.9	9999	0.00	0	0	9999	416

DAILY SUMMARIES

3 METER TEMP --- AVG = 999.9 MAX = 999.9 MIN = 999.9 AVG DEW POINT = 999.9 TOTAL PRCP = 0.00

10 METER WINDS -- AVG SPEED = 3.5 AVG DIR = 125 PEAK SPEED = 14.0 , OCCURRED DURING HOUR 12

NUMBER OF HOURS PER STABILITY CLASS A = 0 , B = 0, C = 0, D = 0, E = 0, F = 0, G = 0

WIPP METEOROLOGICAL DATA DAILY SUMMARY FOR 6/ 6/77

JULIAN DAY.HR	3 METER WIND DIR	SPD	PEAK SPD	TURB INT	10 METER WIND DIR	SPD	PEAK SPD	TURB INT	30 METER WIND DIR	SPD	PEAK SPD	TURB INT	BAROM PRESS
157. 0	135	2.5	5.0	99.99	114	1.9	4.5	99.99	119	6.0	8.3	99.99	898.3
157. 1	135	1.5	4.5	99.99	120	1.8	5.0	99.99	130	7.5	9.0	99.99	898.4
157. 2	135	1.8	4.0	99.99	114	1.7	4.0	99.99	124	7.3	8.0	99.99	898.4
157. 3	103	0.8	1.5	99.99	120	1.4	3.5	99.99	127	6.5	8.0	99.99	898.4
157. 4	119	1.3	2.0	99.99	108	2.0	4.0	99.99	124	6.0	7.5	99.99	898.3
157. 5	135	2.5	4.0	99.99	120	3.3	5.0	99.99	132	6.8	8.0	99.99	898.3
157. 6	124	2.3	4.5	99.99	132	4.3	6.5	99.99	140	6.5	8.3	99.99	898.4
157. 7	124	2.5	4.5	99.99	126	2.9	5.0	99.99	132	5.0	6.8	99.99	898.7
157. 8	135	4.0	6.0	99.99	132	3.8	6.5	99.99	135	4.0	7.0	99.99	899.1
157. 9	140	5.0	8.0	99.99	120	1.6	5.0	99.99	119	3.0	5.3	99.99	899.1
157.10	157	5.0	8.0	99.99	90	3.8	7.0	99.99	92	5.0	6.5	99.99	899.1
157.11	124	4.0	8.0	99.99	126	3.8	8.0	99.99	124	5.5	8.3	99.99	899.1
157.12	135	3.8	8.5	99.99	84	4.1	7.0	99.99	76	6.0	8.0	99.99	899.1
157.13	130	4.0	7.5	99.99	90	6.2	9.0	99.99	81	6.0	10.0	99.99	898.8
157.14	113	3.5	11.5	99.99	90	3.2	9.0	99.99	92	6.5	10.5	99.99	898.3
157.15	9999	999.9	999.9	99.99	90	1.9	9.0	99.99	86	5.8	8.8	99.99	897.3
157.16	137	3.5	8.5	99.99	108	4.3	9.0	99.99	126	5.5	10.5	99.99	896.4
157.17	113	2.0	8.5	99.99	108	2.8	10.0	99.99	137	4.0	9.5	99.99	896.2
157.18	103	4.0	6.0	99.99	90	4.1	7.5	99.99	94	6.0	8.0	99.99	895.9
157.19	95	3.0	5.5	99.99	78	3.3	5.0	99.99	88	5.0	7.5	99.99	895.9
157.20	54	1.5	4.5	99.99	60	3.0	5.0	99.99	69	4.8	6.0	99.99	895.9
157.21	76	2.0	3.0	99.99	72	4.2	4.5	99.99	83	6.0	7.0	99.99	896.2
157.22	86	3.0	3.5	99.99	84	4.4	5.0	99.99	94	7.3	7.5	99.99	896.8
157.23	97	2.5	3.5	99.99	96	4.2	5.0	99.99	110	5.3	8.0	99.99	897.2

JULIAN DAY.HR	TEMPERATURES 3 M	10 M	30 M	DELTA TEMPS 10-3	30-3	30-10	STAB CLASS	DEW POINT	REL HUM	PRCP	RADIATION PARAMETERS SW SKY	SW REF	LW SKY	LW REF
157. 0	999.9	20.6	999.9	99.99	99.99	99.99		999.9	9999	0.00	0	0	9999	411
157. 1	999.9	19.6	999.9	99.99	99.99	99.99		999.9	9999	0.00	0	0	9999	404
157. 2	999.9	19.1	999.9	99.99	99.99	99.99		999.9	9999	0.00	0	0	9999	402
157. 3	999.9	18.9	999.9	99.99	99.99	99.99		999.9	9999	0.00	0	0	9999	398
157. 4	999.9	18.1	999.9	99.99	99.99	99.99		999.9	9999	0.00	0	0	9999	393
157. 5	999.9	18.2	999.9	99.99	99.99	99.99		999.9	9999	0.00	0	0	9999	400
157. 6	999.9	18.0	999.9	99.99	99.99	99.99		999.9	9999	0.00	13	4	9999	403
157. 7	999.9	19.2	999.9	99.99	99.99	99.99		999.9	9999	0.00	168	42	9999	420
157. 8	999.9	21.6	999.9	99.99	99.99	99.99		999.9	9999	0.00	384	90	9999	444
157. 9	999.9	23.5	999.9	99.99	99.99	99.99		999.9	9999	0.00	593	134	9999	478
157.10	999.9	25.4	999.9	99.99	99.99	99.99		999.9	9999	0.00	789	174	9999	504
157.11	999.9	26.5	999.9	99.99	99.99	99.99		999.9	9999	0.00	925	199	9999	535
157.12	999.9	26.6	999.9	99.99	99.99	99.99		999.9	9999	0.00	1015	214	9999	539
157.13	999.9	28.0	999.9	99.99	99.99	99.99		999.9	9999	0.00	1077	227	9999	564
157.14	999.9	28.6	999.9	99.99	99.99	99.99		999.9	9999	0.00	1021	403	9999	568
157.15	999.9	29.1	999.9	99.99	99.99	99.99		999.9	9999	0.00	936	205	9999	563
157.16	999.9	29.4	999.9	99.99	99.99	99.99		999.9	9999	0.00	198	36	9999	512
157.17	999.9	29.8	999.9	99.99	99.99	99.99		999.9	9999	0.00	581	134	9999	527
157.18	999.9	29.8	999.9	99.99	99.99	99.99		999.9	9999	0.00	333	80	9999	498
157.19	999.9	29.0	999.9	99.99	99.99	99.99		999.9	9999	0.00	108	27	9999	475
157.20	999.9	25.6	999.9	99.99	99.99	99.99		999.9	9999	0.00	0	0	9999	428
157.21	999.9	24.1	999.9	99.99	99.99	99.99		999.9	9999	0.00	0	0	9999	424
157.22	999.9	23.6	999.9	99.99	99.99	99.99		999.9	9999	0.00	0	0	9999	428
157.23	999.9	22.9	999.9	99.99	99.99	99.99		999.9	9999	0.00	0	0	9999	422

DAILY SUMMARIES

3 METER TEMP --- AVG = 999.9 MAX = 999.9 MIN = 999.9 AVG DEW POINT = 999.9 TOTAL PRCP = 0.00

10 METER WINDS -- AVG SPEED = 3.1 AVG DIR = 101 PEAK SPEED = 10.0 , OCCURRED DURING HOUR 17

NUMBER OF HOURS PER STABILITY CLASS A = 0 , B = 0, C = 0, D = 0, E = 0, F = 0, G = 0

NIPP METEOROLOGICAL DATA DAILY SUMMARY FOR 6/ 7/77

JULIAN DAY.HR	3 METER WIND DIR	SPD	PEAK SPD	TURB INT	10 METER WIND DIR	SPD	PEAK SPD	TURB INT	30 METER WIND DIR	SPD	PEAK SPD	TURB INT	BAROM PRESS
158. 0	103	2.0	3.5	99.99	108	1.7	4.5	99.99	123	7.0	8.0	99.99	897.2
158. 1	108	1.5	2.5	99.99	108	1.1	2.0	99.99	126	6.5	7.0	99.99	897.2
158. 2	103	1.5	3.0	99.99	102	2.4	3.5	99.99	121	6.0	6.8	99.99	897.2
158. 3	108	1.3	3.0	99.99	108	1.1	4.0	99.99	131	6.5	7.5	99.99	897.0
158. 4	103	1.3	3.0	99.99	108	2.1	4.0	99.99	123	5.8	7.0	99.99	897.0
158. 5	103	2.0	3.0	99.99	96	1.7	3.0	99.99	126	6.0	6.8	99.99	897.0
158. 6	9999	2.0	3.0	99.99	360	1.1	3.0	99.99	356	2.0	6.0	99.99	897.6
158. 7	9999	5.0	7.0	99.99	72	5.9	8.0	99.99	77	7.5	8.0	99.99	898.1
158. 8	9999	5.0	8.0	99.99	72	6.6	9.5	99.99	86	7.5	10.0	99.99	898.4
158. 9	9999	4.8	8.0	99.99	90	5.7	8.5	99.99	94	6.8	9.0	99.99	898.7
158.10	9999	3.5	7.5	99.99	90	5.1	7.5	99.99	99	4.5	8.5	99.99	898.7
158.11	97	1.5	5.0	99.99	120	2.1	6.0	99.99	94	1.8	6.0	99.99	898.7
158.12	86	2.5	4.5	99.99	72	2.3	4.0	99.99	86	2.5	4.5	99.99	898.0
158.13	119	2.3	6.0	99.99	144	3.3	7.0	99.99	131	3.0	8.5	99.99	897.2
158.14	119	2.5	6.3	99.99	120	3.4	7.5	99.99	108	4.5	7.9	99.99	896.1
158.15	9999	999.9	999.9	99.99	126	5.3	8.5	99.99	126	5.0	9.0	99.99	894.8
158.16	9999	999.9	999.9	99.99	96	3.0	7.0	99.99	104	3.0	8.0	99.99	894.2
158.17	9999	999.9	999.9	99.99	144	2.5	7.0	99.99	103	4.0	7.0	99.99	893.7
158.18	9999	1.8	7.5	99.99	120	2.1	8.5	99.99	113	2.5	8.3	99.99	893.5
158.19	9999	3.0	6.0	99.99	150	3.1	7.5	99.99	157	5.5	8.0	99.99	893.3
158.20	9999	1.5	6.0	99.99	180	3.9	7.0	99.99	173	3.5	7.8	99.99	893.3
158.21	9999	2.5	8.0	99.99	162	3.6	8.5	99.99	157	4.8	8.8	99.99	893.3
158.22	9999	1.0	4.0	99.99	132	2.7	5.5	99.99	140	4.5	7.5	99.99	893.8
158.23	9999	0.8	2.0	99.99	162	2.3	5.5	99.99	151	4.5	7.0	99.99	893.9

JULIAN DAY.HR	TEMPERATURES 3 M	10 M	30 M	DELTA TEMPS 10-3	30-3	30-10	STAB CLASS	DEW POINT	REL HUM	PRCP	RADIATION PARAMETERS SW SKY	SW REF	LW SKY	LW REF
158. 0	999.9	22.2	999.9	99.99	99.99	99.99		999.9	9999	0.00	0	0	9999	415
158. 1	999.9	21.6	999.9	99.99	99.99	99.99		999.9	9999	0.00	0	0	9999	416
158. 2	999.9	21.0	999.9	99.99	99.99	99.99		999.9	9999	0.00	0	0	9999	414
158. 3	999.9	20.8	999.9	99.99	99.99	99.99		999.9	9999	0.00	0	0	9999	411
158. 4	999.9	20.1	999.9	99.99	99.99	99.99		999.9	9999	0.00	0	0	9999	403
158. 5	999.9	20.0	999.9	99.99	99.99	99.99		999.9	9999	0.00	0	0	9999	406
158. 6	999.9	19.8	999.9	99.99	99.99	99.99		999.9	9999	0.00	11	3	9999	401
158. 7	999.9	18.8	999.9	99.99	99.99	99.99		999.9	9999	0.00	126	29	9999	415
158. 8	999.9	19.9	999.9	99.99	99.99	99.99		999.9	9999	0.00	255	58	9999	427
158. 9	999.9	22.5	999.9	99.99	99.99	99.99		999.9	9999	0.00	558	127	9999	466
158.10	999.9	24.9	999.9	99.99	99.99	99.99		999.9	9999	0.00	785	172	9999	500
158.11	999.9	25.4	999.9	99.99	99.99	99.99		999.9	9999	0.00	799	169	9999	522
158.12	999.9	26.7	999.9	99.99	99.99	99.99		999.9	9999	0.00	876	183	9999	552
158.13	999.9	28.6	999.9	99.99	99.99	99.99		999.9	9999	0.00	1135	243	9999	579
158.14	999.9	28.4	999.9	99.99	99.99	99.99		999.9	9999	0.00	1023	217	9999	568
158.15	999.9	28.9	999.9	99.99	99.99	99.99		999.9	9999	0.00	445	85	9999	529
158.16	999.9	30.3	999.9	99.99	99.99	99.99		999.9	9999	0.00	756	170	9999	550
158.17	999.9	30.0	999.9	99.99	99.99	99.99		999.9	9999	0.00	559	130	9999	526
158.18	999.9	29.6	999.9	99.99	99.99	99.99		999.9	9999	0.00	331	80	9999	498
158.19	999.9	26.2	999.9	99.99	99.99	99.99		999.9	9999	0.00	0	0	9999	447
158.20	999.9	25.3	999.9	99.99	99.99	99.99		999.9	9999	0.00	0	0	9999	442
158.21	999.9	24.7	999.9	99.99	99.99	99.99		999.9	9999	0.00	0	0	9999	436
158.22	999.9	23.2	999.9	99.99	99.99	99.99		999.9	9999	0.00	0	0	9999	424
158.23	999.9	22.7	999.9	99.99	99.99	99.99		999.9	9999	0.00	0	0	9999	422

DAILY SUMMARIES

3 METER TEMP --- AVG = 999.9 MAX = 999.9 MIN = 999.9 AVG DEW POINT = 999.9 TOTAL PRCP = 0.00

10 METER WINDS -- AVG SPEED = 2.6 AVG DIR = 112 PEAK SPEED = 9.5 , OCCURRED DURING HOUR 8

NUMBER OF HOURS PER STABILITY CLASS A = 0 , B = 0, C = 0, D = 0, E = 0, F = 0, G = 0

WIPP METEOROLOGICAL DATA DAILY SUMMARY FOR 6/ 8/77

JULIAN DAY.HR	3 METER WIND DIR	SPD	PEAK SPD	TURB INT	10 METER WIND DIR	SPD	PEAK SPD	TURB INT	30 METER WIND DIR	SPD	PEAK SPD	TURB INT	BAROM PRESS
159. 0	9999	1.0	2.5	99.99	114	1.8	4.0	99.99	132	4.8	5.9	99.99	893.9
159. 1	9999	1.5	3.0	99.99	120	1.0	3.5	99.99	130	6.5	7.5	99.99	893.9
159. 2	9999	1.3	2.0	99.99	114	1.0	3.0	99.99	130	6.5	7.4	99.99	893.8
159. 3	9999	1.3	2.0	99.99	120	1.5	3.5	99.99	127	6.5	7.5	99.99	893.5
159. 4	9999	1.0	2.5	99.99	126	2.3	4.0	99.99	138	4.5	6.5	99.99	893.4
159. 5	9999	1.5	2.5	99.99	126	1.3	3.0	99.99	127	6.8	7.5	99.99	893.2
159. 6	9999	1.5	3.0	99.99	120	1.6	3.0	99.99	124	7.3	7.5	99.99	893.2
159. 7	9999	2.0	2.5	99.99	114	1.5	3.5	99.99	124	6.5	7.8	99.99	893.2
159. 8	9999	2.0	3.5	99.99	132	3.0	4.5	99.99	135	3.3	6.5	99.99	893.4
159. 9	9999	3.0	5.0	99.99	156	4.0	5.5	99.99	130	5.0	7.0	99.99	893.4
159.10	9999	2.5	5.5	99.99	162	3.4	6.0	99.99	146	3.3	7.9	99.99	893.2
159.11	9999	1.5	7.0	99.99	156	2.7	8.5	99.99	135	3.5	7.8	99.99	893.2
159.12	9999	3.5	7.5	99.99	168	3.4	7.0	99.99	184	5.0	7.0	99.99	892.4
159.13	113	2.0	7.0	99.99	156	2.8	7.5	99.99	173	4.0	7.5	99.99	891.7
159.14	162	3.5	8.0	99.99	174	4.2	9.5	99.99	151	5.0	10.0	99.99	891.0
159.15	173	4.5	7.0	99.99	180	3.8	10.0	99.99	146	6.3	10.0	99.99	890.6
159.16	157	3.5	7.5	99.99	168	5.9	9.0	99.99	162	4.0	9.5	99.99	890.2
159.17	216	4.9	7.5	99.99	210	4.7	9.0	99.99	216	5.0	9.0	99.99	889.8
159.18	221	4.5	7.0	99.99	216	4.8	8.0	99.99	221	5.3	8.8	99.99	889.0
159.19	167	3.5	7.0	99.99	180	4.6	13.0	99.99	173	4.5	9.0	99.99	889.0
159.20	162	3.5	6.5	99.99	168	4.4	7.5	99.99	167	5.0	8.0	99.99	889.3
159.21	184	1.0	4.9	99.99	174	2.3	6.0	99.99	157	2.8	8.0	99.99	889.8
159.22	162	5.5	9.3	99.99	162	7.8	10.0	99.99	157	8.5	12.5	99.99	890.4
159.23	149	4.5	8.5	99.99	144	6.3	9.5	99.99	151	8.0	11.8	99.99	890.6

JULIAN DAY.HR	TEMPERATURES 3 M	10 M	30 M	DELTA TEMPS 10-3	30-3	30-10	STAB CLASS	DEW POINT	REL HUM	PRCP	RADIATION PARAMETERS SW SKY	SW REF	LW SKY	LW REF
159. 0	999.9	21.0	999.9	99.99	99.99	99.99		999.9	9999	0.00	0	0	9999	411
159. 1	999.9	20.3	999.9	99.99	99.99	99.99		999.9	9999	0.00	0	0	9999	412
159. 2	999.9	19.8	999.9	99.99	99.99	99.99		999.9	9999	0.00	0	0	9999	407
159. 3	999.9	19.9	999.9	99.99	99.99	99.99		999.9	9999	0.00	0	0	9999	409
159. 4	999.9	19.0	999.9	99.99	99.99	99.99		999.9	9999	0.00	0	0	9999	402
159. 5	999.9	18.8	999.9	99.99	99.99	99.99		999.9	9999	0.00	0	0	9999	402
159. 6	999.9	18.7	999.9	99.99	99.99	99.99		999.9	9999	0.00	13	3	9999	404
159. 7	999.9	20.6	999.9	99.99	99.99	99.99		999.9	9999	0.00	158	40	9999	424
159. 8	999.9	22.8	999.9	99.99	99.99	99.99		999.9	9999	0.00	361	85	9999	446
159. 9	999.9	24.7	999.9	99.99	99.99	99.99		999.9	9999	0.00	570	129	9999	481
159.10	999.9	25.9	999.9	99.99	99.99	99.99		999.9	9999	0.00	762	167	9999	519
159.11	999.9	27.9	999.9	99.99	99.99	99.99		999.9	9999	0.00	904	193	9999	556
159.12	999.9	29.6	999.9	99.99	99.99	99.99		999.9	9999	0.00	996	211	9999	568
159.13	999.9	30.4	999.9	99.99	99.99	99.99		999.9	9999	0.00	1040	220	9999	596
159.14	999.9	30.9	999.9	99.99	99.99	99.99		999.9	9999	0.00	1034	221	9999	584
159.15	999.9	30.8	999.9	99.99	99.99	99.99		999.9	9999	0.00	278	55	9999	524
159.16	999.9	31.9	999.9	99.99	99.99	99.99		999.9	9999	0.00	754	168	9999	561
159.17	999.9	31.1	999.9	99.99	99.99	99.99		999.9	9999	0.00	558	130	9999	528
159.18	999.9	31.2	999.9	99.99	99.99	99.99		999.9	9999	0.00	338	80	9999	507
159.19	999.9	30.4	999.9	99.99	99.99	99.99		999.9	9999	0.00	95	21	9999	482
159.20	999.9	29.1	999.9	99.99	99.99	99.99		999.9	9999	0.00	0	0	9999	463
159.21	999.9	26.3	999.9	99.99	99.99	99.99		999.9	9999	0.00	0	0	9999	441
159.22	999.9	26.5	999.9	99.99	99.99	99.99		999.9	9999	0.00	0	0	9999	448
159.23	999.9	25.1	999.9	99.99	99.99	99.99		999.9	9999	0.00	0	0	9999	439

DAILY SUMMARIES

3 METER TEMP --- AVG = 999.9 MAX = 999.9 MIN = 999.9 AVG DEW POINT = 999.9 TOTAL PRCP = 0.00

10 METER WINDS -- AVG SPEED = 3.0 AVG DIR = 162 PEAK SPEED = 13.0 , OCCURRED DURING HOUR 19

NUMBER OF HOURS PER STABILITY CLASS A = 0 , B = 0, C = 0, D = 0, E = 0, F = 0, G = 0

WIPP METEOROLOGICAL DATA DAILY SUMMARY FOR 6/ 9/77

JULIAN DAY.HR	3 METER WIND DIR	SPD	PEAK SPD	TURB INT	10 METER WIND DIR	SPD	PEAK SPD	TURB INT	30 METER WIND DIR	SPD	PEAK SPD	TURB INT	BAROM PRESS
160. 0	143	3.5	6.3	99.99	144	5.8	8.0	99.99	146	7.0	9.3	99.99	890.5
160. 1	140	3.8	6.0	99.99	144	4.9	7.5	99.99	146	6.8	9.3	99.99	890.6
160. 2	151	2.5	5.8	99.99	138	3.9	6.5	99.99	151	5.5	9.5	99.99	890.6
160. 3	149	2.5	4.2	99.99	132	3.8	5.5	99.99	140	6.0	8.0	99.99	890.6
160. 4	124	1.3	4.5	99.99	120	2.0	6.5	99.99	135	5.3	7.3	99.99	890.6
160. 5	130	2.0	3.3	99.99	126	2.2	5.5	99.99	132	7.0	8.0	99.99	890.6
160. 6	124	2.0	3.1	99.99	126	2.5	4.0	99.99	130	7.0	8.3	99.99	891.1
160. 7	135	2.8	4.3	99.99	132	3.8	5.5	99.99	135	5.3	8.5	99.99	891.4
160. 8	135	3.5	6.2	99.99	138	4.2	7.5	99.99	140	5.0	8.0	99.99	891.8
160. 9	173	3.5	5.5	99.99	162	4.3	6.0	99.99	162	5.0	6.8	99.99	892.4
160.10	205	3.0	5.9	99.99	180	4.1	6.0	99.99	194	4.8	7.0	99.99	892.6
160.11	221	4.5	7.0	99.99	168	2.5	8.5	99.99	173	5.0	7.3	99.99	892.4
160.12	200	4.0	6.5	99.99	180	3.9	8.5	99.99	184	5.0	7.5	99.99	892.0
160.13	184	5.0	7.3	99.99	180	4.8	8.0	99.99	167	5.5	8.0	99.99	891.8
160.14	162	5.5	12.0	99.99	168	6.3	12.5	99.99	162	6.0	13.0	99.99	891.0
160.15	184	4.5	9.2	99.99	180	6.0	10.0	99.99	184	5.5	11.5	99.99	890.7
160.16	140	5.0	8.8	99.99	168	4.3	10.5	99.99	194	6.3	10.5	99.99	890.2
160.17	140	3.5	9.5	99.99	174	6.7	10.5	99.99	167	7.0	11.5	99.99	889.8
160.18	108	5.0	10.0	99.99	138	6.6	11.5	99.99	92	7.5	11.8	99.99	889.8
160.19	329	3.5	7.0	99.99	306	5.9	8.5	99.99	356	6.5	9.0	99.99	890.9
160.20	227	6.0	7.5	99.99	222	6.4	9.0	99.99	238	10.0	11.3	99.99	892.8
160.21	54	3.0	8.5	99.99	78	3.8	10.5	99.99	76	6.0	12.5	99.99	892.5
160.22	97	6.0	9.9	99.99	114	9.1	14.0	99.99	135	13.0	15.0	99.99	892.8
160.23	70	3.5	9.5	99.99	102	5.3	11.5	99.99	97	7.5	15.8	99.99	892.4

JULIAN DAY.HR	TEMPERATURES 3 M	10 M	30 M	DELTA TEMPS 10-3	30-3	30-10	STAB CLASS	DEW POINT	REL HUM	PRCP	RADIATION PARAMETERS SW SKY	SW REF	LW SKY	LW REF
160. 0	999.9	23.8	999.9	99.99	99.99	99.99		999.9	9999	0.00	0	0	9999	432
160. 1	999.9	22.9	999.9	99.99	99.99	99.99		999.9	9999	0.00	0	0	9999	425
160. 2	999.9	21.8	999.9	99.99	99.99	99.99		999.9	9999	0.00	0	0	9999	419
160. 3	999.9	21.2	999.9	99.99	99.99	99.99		999.9	9999	0.00	0	0	9999	415
160. 4	999.9	20.0	999.9	99.99	99.99	99.99		999.9	9999	0.00	0	0	9999	406
160. 5	999.9	19.3	999.9	99.99	99.99	99.99		999.9	9999	0.00	0	0	9999	406
160. 6	999.9	18.8	999.9	99.99	99.99	99.99		999.9	9999	0.00	14	4	9999	405
160. 7	999.9	20.7	999.9	99.99	99.99	99.99		999.9	9999	0.00	161	41	9999	426
160. 8	999.9	22.8	999.9	99.99	99.99	99.99		999.9	9999	0.00	371	87	9999	453
160. 9	999.9	25.6	999.9	99.99	99.99	99.99		999.9	9999	0.00	576	130	9999	483
160.10	999.9	27.7	999.9	99.99	99.99	99.99		999.9	9999	0.00	764	168	9999	519
160.11	999.9	29.4	999.9	99.99	99.99	99.99		999.9	9999	0.00	902	193	9999	562
160.12	999.9	30.7	999.9	99.99	99.99	99.99		999.9	9999	0.00	1006	212	9999	576
160.13	999.9	31.5	999.9	99.99	99.99	99.99		999.9	9999	0.00	1094	231	9999	592
160.14	999.9	32.0	999.9	99.99	99.99	99.99		999.9	9999	0.00	623	132	9999	555
160.15	999.9	32.7	999.9	99.99	99.99	99.99		999.9	9999	0.00	435	92	9999	548
160.16	999.9	32.6	999.9	99.99	99.99	99.99		999.9	9999	0.00	265	56	9999	523
160.17	999.9	32.2	999.9	99.99	99.99	99.99		999.9	9999	0.00	204	44	9999	508
160.18	999.9	31.0	999.9	99.99	99.99	99.99		999.9	9999	0.00	62	13	9999	486
160.19	999.9	25.4	999.9	99.99	99.99	99.99		999.9	9999	0.00	3	0	9999	451
160.20	999.9	21.1	999.9	99.99	99.99	99.99		999.9	9999	0.03	0	0	9999	410
160.21	999.9	22.3	999.9	99.99	99.99	99.99		999.9	9999	0.35	3	3	9999	422
160.22	999.9	23.2	999.9	99.99	99.99	99.99		999.9	9999	0.00	5	0	9999	428
160.23	999.9	23.9	999.9	99.99	99.99	99.99		999.9	9999	0.00	0	0	9999	427

DAILY SUMMARIES

3 METER TEMP --- AVG = 999.9 MAX = 999.9 MIN = 999.9 AVG DEW POINT = 999.9 TOTAL PRCP = 0.38

10 METER WINDS -- AVG SPEED = 3.6 AVG DIR = 152 PEAK SPEED = 14.0 , OCCURRED DURING HOUR 22

NUMBER OF HOURS PER STABILITY CLASS A = 0 , B = 0, C = 0, D = 0, E = 0, F = 0, G = 0

WIPP METEOROLOGICAL DATA DAILY SUMMARY FOR 6/10/77

JULIAN DAY.HR	3 METER WIND DIR	SPD	PEAK SPD	TURB INT	10 METER WIND DIR	SPD	PEAK SPD	TURB INT	30 METER WIND DIR	SPD	PEAK SPD	TURB INT	BAROM PRESS
161. 0	100	1.5	4.0	99.99	132	3.8	8.0	99.99	135	5.0	8.5	99.99	893.3
161. 1	76	1.5	2.8	99.99	108	0.7	4.5	99.99	119	5.0	7.0	99.99	893.3
161. 2	81	1.5	2.5	99.99	120	0.9	2.5	99.99	127	6.5	8.3	99.99	893.2
161. 3	86	2.0	2.8	99.99	114	1.4	2.5	99.99	124	5.3	8.0	99.99	893.2
161. 4	86	1.5	3.0	99.99	120	1.8	4.0	99.99	130	7.5	8.5	99.99	893.2
161. 5	92	1.5	3.0	99.99	120	2.9	4.5	99.99	132	5.5	8.5	99.99	893.2
161. 6	97	2.0	4.0	99.99	132	3.2	6.0	99.99	135	6.0	8.8	99.99	893.5
161. 7	92	2.5	3.3	99.99	168	2.5	4.0	99.99	130	6.0	8.0	99.99	893.9
161. 8	70	3.0	4.5	99.99	150	3.5	5.5	99.99	157	4.5	6.5	99.99	894.2
161. 9	81	3.8	5.5	99.99	168	4.6	5.5	99.99	173	5.0	6.3	99.99	894.7
161.10	70	3.0	5.3	99.99	150	3.4	5.5	99.99	167	3.5	5.3	99.99	895.0
161.11	178	2.0	4.0	99.99	180	2.6	5.0	99.99	194	2.5	5.5	99.99	894.7
161.12	45	1.5	3.5	99.99	270	1.4	5.0	99.99	83	1.5	4.5	99.99	894.8
161.13	324	1.5	4.3	99.99	342	1.1	9.5	99.99	356	1.5	4.5	99.99	894.4
161.14	103	2.5	3.5	99.99	270	2.0	3.0	99.99	140	2.5	4.3	99.99	893.6
161.15	119	2.0	7.5	99.99	306	3.2	9.5	99.99	148	3.0	7.5	99.99	892.8
161.16	76	3.0	5.5	99.99	108	3.2	6.0	99.99	104	3.5	11.0	99.99	892.6
161.17	88	2.0	4.8	99.99	270	2.3	5.0	99.99	104	4.0	5.5	99.99	892.2
161.18	32	3.5	4.8	99.99	111	3.3	5.0	99.99	65	4.5	6.3	99.99	891.9
161.19	119	6.5	9.8	99.99	162	9.0	12.0	99.99	151	10.0	11.8	99.99	892.0
161.20	119	4.8	9.0	99.99	150	6.5	11.0	99.99	149	8.5	12.0	99.99	892.4
161.21	113	4.5	7.5	99.99	156	6.1	9.5	99.99	140	8.5	10.0	99.99	892.9
161.22	113	4.0	7.5	99.99	159	6.1	10.0	99.99	143	7.8	10.8	99.99	893.7
161.23	113	3.5	7.8	99.99	156	6.2	9.0	99.99	[illegible]	6.5	10.5	99.99	894.2

JULIAN DAY.HR	TEMPERATURES 3 M	10 M	30 M	DELTA TEMPS 10-3	30-3	30-10	STAB CLASS	DEW POINT	REL HUM	PRCP	RADIATION PARAMETERS SW SKY	SW REF	LW SKY	LW REF
161. 0	999.9	21.9	999.9	99.99	99.99	99.99		999.9	9999	0.00	0	0	9999	416
161. 1	999.9	20.2	999.9	99.99	99.99	99.99		999.9	9999	0.00	0	0	9999	405
161. 2	999.9	19.9	999.9	99.99	99.99	99.99		999.9	9999	0.00	0	0	9999	406
161. 3	999.9	19.4	999.9	99.99	99.99	99.99		999.9	9999	0.00	0	0	9999	405
161. 4	999.9	18.8	999.9	99.99	99.99	99.99		999.9	9999	0.00	0	0	9999	402
161. 5	999.9	19.4	999.9	99.99	99.99	99.99		999.9	9999	0.00	0	0	9999	403
161. 6	999.9	19.3	999.9	99.99	99.99	99.99		999.9	9999	0.00	10	2	9999	403
161. 7	999.9	20.4	999.9	99.99	99.99	99.99		999.9	9999	0.00	165	39	9999	421
161. 8	999.9	26.2	999.9	99.99	99.99	99.99		999.9	9999	0.00	377	82	9999	437
161. 9	999.9	24.3	999.9	99.99	99.99	99.99		999.9	9999	0.00	585	122	9999	455
161.10	999.9	27.2	999.9	99.99	99.99	99.99		999.9	9999	0.00	766	158	9999	489
161.11	999.9	28.8	999.9	99.99	99.99	99.99		999.9	9999	0.00	913	185	9999	522
161.12	999.9	29.8	999.9	99.99	99.99	99.99		999.9	9999	0.00	990	200	9999	559
161.13	999.9	30.6	999.9	99.99	99.99	99.99		999.9	9999	0.00	1015	204	9999	583
161.14	999.9	33.3	999.9	99.99	99.99	99.99		999.9	9999	0.00	973	196	9999	572
161.15	999.9	34.0	999.9	99.99	99.99	99.99		999.9	9999	0.00	906	188	9999	573
161.16	999.9	34.5	999.9	99.99	99.99	99.99		999.9	9999	0.00	853	184	9999	568
161.17	999.9	34.3	999.9	99.99	99.99	99.99		999.9	9999	0.00	545	118	9999	541
161.18	999.9	33.9	999.9	99.99	99.99	99.99		999.9	9999	0.00	355	79	9999	517
161.19	999.9	32.1	999.9	99.99	99.99	99.99		999.9	9999	0.00	130	33	9999	491
161.20	999.9	29.9	999.9	99.99	99.99	99.99		999.9	9999	0.00	0	0	9999	468
161.21	999.9	28.6	999.9	99.99	99.99	99.99		999.9	9999	0.00	0	0	9999	461
161.22	999.9	27.3	999.9	99.99	99.99	99.99		999.9	9999	0.00	0	0	9999	450
161.23	999.9	26.4	999.9	99.99	99.99	99.99		999.9	9999	0.00	0	0	9999	448

DAILY SUMMARIES

3 METER TEMP --- AVG = 999.9 MAX = 999.9 MIN = 999.9 AVG DEW POINT = 999.9 TOTAL PRCP = 0.00

10 METER WINDS -- AVG SPEED = 2.5 AVG DIR = 153 PEAK SPEED = 12.0 , OCCURRED DURING HOUR 19

NUMBER OF HOURS PER STABILITY CLASS A = 0 , B = 0, C = 0, D = 0, E = 0, F = 0, G = 0

WIPP METEOROLOGICAL DATA DAILY SUMMARY FOR 6/11/77

JULIAN DAY.HR	3 METER WIND DIR	SPD	PEAK SPD	TURB INT	10 METER WIND DIR	SPD	PEAK SPD	TURB INT	30 METER WIND DIR	SPD	PEAK SPD	TURB INT	BAROM PRESS
162. 0	119	4.0	7.8	99.99	165	5.2	9.0	99.99	151	7.0	9.3	99.99	894.2
162. 1	105	4.3	6.5	99.99	132	4.8	8.0	99.99	140	7.5	9.2	99.99	894.3
162. 2	103	4.3	5.5	99.99	126	5.6	4.5	99.99	135	8.5	10.5	99.99	894.0
162. 3	108	3.5	7.0	99.99	144	5.3	10.0	99.99	140	7.0	10.5	99.99	893.6
162. 4	108	3.0	7.0	99.99	144	4.0	8.5	99.99	135	6.0	9.8	99.99	893.6
162. 5	92	3.5	5.5	99.99	126	4.0	7.0	99.99	130	8.0	9.0	99.99	893.6
162. 6	108	1.3	6.0	99.99	144	3.6	7.5	99.99	140	4.8	9.5	99.99	893.7
162. 7	97	2.5	4.8	99.99	150	3.6	6.0	99.99	138	5.0	6.5	99.99	893.9
162. 8	124	3.0	3.5	99.99	162	4.0	5.0	99.99	162	4.0	5.3	99.99	894.3
162. 9	151	2.5	4.8	99.99	174	3.2	5.0	99.99	167	2.5	5.5	99.99	894.4
162.10	108	2.0	3.5	99.99	162	2.3	4.0	99.99	157	2.0	4.0	99.99	894.4
162.11	103	1.0	4.0	99.99	126	2.0	4.0	99.99	76	1.8	4.5	99.99	894.4
162.12	43	2.0	5.5	99.99	300	2.4	5.5	99.99	103	2.5	5.3	99.99	893.9
162.13	40	2.5	6.0	99.99	270	3.1	6.0	99.99	77	3.5	6.5	99.99	893.2
162.14	81	3.0	5.5	99.99	270	1.5	7.0	99.99	92	5.5	7.0	99.99	892.5
162.15	97	4.0	7.5	99.99	141	1.6	8.0	99.99	140	5.3	7.5	99.99	892.0
162.16	119	3.5	6.8	99.99	144	3.5	8.0	99.99	113	5.0	7.5	99.99	891.1
162.17	76	1.0	6.5	99.99	162	2.8	7.5	99.99	143	1.5	6.5	99.99	890.6
162.18	335	6.5	10.5	99.99	360	9.1	7.5	99.99	356	10.0	19.5	99.99	890.9
162.19	329	6.0	11.8	99.99	360	7.4	14.5	99.99	2	8.5	21.5	99.99	891.4
162.20	351	2.0	8.0	99.99	24	3.7	8.5	99.99	29	3.5	9.5	99.99	891.6
162.21	34	4.0	6.3	99.99	72	5.2	6.0	99.99	72	8.0	10.3	99.99	891.7
162.22	29	4.0	6.5	99.99	72	6.1	8.0	99.99	83	7.5	9.5	99.99	892.4
162.23	61	6.0	10.5	99.99	90	6.4	7.5	99.99	99	12.0	15.0	99.99	892.5

JULIAN DAY.HR	TEMPERATURES 3 M	10 M	30 M	DELTA TEMPS 10-3	30-3	30-10	STAB CLASS	DEW POINT	REL HUM	PRCP	RADIATION PARAMETERS SW SKY	SW REF	LW SKY	LW REF
162. 0	999.9	25.0	999.9	99.99	99.99	99.99		999.9	9999	0.00	0	0	9999	439
162. 1	999.9	23.9	999.9	99.99	99.99	99.99		999.9	9999	0.00	0	0	9999	433
162. 2	999.9	23.2	999.9	99.99	99.99	99.99		999.9	9999	0.00	0	0	9999	428
162. 3	999.9	20.6	999.9	99.99	99.99	99.99		999.9	9999	0.00	0	0	9999	425
162. 4	999.9	21.2	999.9	99.99	99.99	99.99		999.9	9999	0.00	0	0	9999	417
162. 5	999.9	20.7	999.9	99.99	99.99	99.99		999.9	9999	0.00	0	0	9999	415
162. 6	999.9	20.1	999.9	99.99	99.99	99.99		999.9	9999	0.00	16	4	9999	414
162. 7	999.9	21.0	999.9	99.99	99.99	99.99		999.9	9999	0.00	139	33	9999	428
162. 8	999.9	23.4	999.9	99.99	99.99	99.99		999.9	9999	0.00	268	60	9999	445
162. 9	999.9	26.0	999.9	99.99	99.99	99.99		999.9	9999	0.00	621	139	9999	491
162.10	999.9	28.3	999.9	99.99	99.99	99.99		999.9	9999	0.00	773	168	9999	528
162.11	999.9	30.5	999.9	99.99	99.99	99.99		999.9	9999	0.00	909	190	9999	558
162.12	999.9	32.1	999.9	99.99	99.99	99.99		999.9	9999	0.00	988	204	9999	579
162.13	999.9	33.1	999.9	99.99	99.99	99.99		999.9	9999	0.00	1025	210	9999	597
162.14	999.9	34.3	999.9	99.99	99.99	99.99		999.9	9999	0.00	1034	216	9999	624
162.15	999.9	34.4	999.9	99.99	99.99	99.99		999.9	9999	0.00	325	68	9999	544
162.16	999.9	35.3	999.9	99.99	99.99	99.99		999.9	9999	0.00	873	194	9999	577
162.17	999.9	34.3	999.9	99.99	99.99	99.99		999.9	9999	0.00	162	29	9999	512
162.18	999.9	29.4	999.9	99.99	99.99	99.99		999.9	9999	0.00	56	10	9999	473
162.19	999.9	27.6	999.9	99.99	99.99	99.99		999.9	9999	0.00	4	0	9999	464
162.20	999.9	25.8	999.9	99.99	99.99	99.99		999.9	9999	0.00	4	5	9999	439
162.21	999.9	24.9	999.9	99.99	99.99	99.99		999.9	9999	0.00	2	3	9999	434
162.22	999.9	24.1	999.9	99.99	99.99	99.99		999.9	9999	0.00	0	0	9999	429
162.23	999.9	22.2	999.9	99.99	99.99	99.99		999.9	9999	0.00	0	0	9999	422

DAILY SUMMARIES

3 METER TEMP --- AVG = 999.9 MAX = 999.9 MIN = 999.9 AVG DEW POINT = 999.9 TOTAL PRCP = 0.00

10 METER WINDS -- AVG SPEED = 1.9 AVG DIR = 115 PEAK SPEED = 14.5 , OCCURRED DURING HOUR 19

NUMBER OF HOURS PER STABILITY CLASS A = 0 , B = 0, C = 0, D = 0, E = 0, F = 0, G = 0

WIPP METEOROLOGICAL DATA DAILY SUMMARY FOR 6/12/77

JULIAN DAY.HR	3 METER WIND DIR	SPD	PEAK SPD	TURB INT	10 METER WIND DIR	SPD	PEAK SPD	TURB INT	30 METER WIND DIR	SPD	PEAK SPD	TURB INT	BAROM PRESS
163. 0	88	3.0	9.0	99.99	126	5.4	10.0	99.99	69	7.0	13.3	99.99	893.5
163. 1	77	1.5	6.5	99.99	90	2.7	8.0	99.99	104	4.0	9.5	99.99	893.9
163. 2	94	0.5	3.5	99.99	108	2.4	6.0	99.99	104	3.3	7.0	99.99	894.3
163. 3	162	1.0	2.3	99.99	252	2.3	3.5	99.99	211	1.0	3.5	99.99	894.3
163. 4	329	0.8	2.0	99.99	342	0.8	4.0	99.99	305	0.8	3.5	99.99	893.7
163. 5	329	0.8	1.5	99.99	342	1.0	3.5	99.99	302	1.0	3.0	99.99	893.9
163. 6	335	1.0	1.5	99.99	312	1.7	3.0	99.99	292	2.5	3.3	99.99	894.3
163. 7	227	1.5	2.0	99.99	324	1.4	3.0	99.99	308	2.0	3.5	99.99	894.6
163. 8	184	2.5	5.0	99.99	222	3.7	5.5	99.99	213	3.5	5.5	99.99	895.0
163. 9	162	4.0	6.8	99.99	198	4.5	7.0	99.99	194	5.3	6.5	99.99	895.1
163.10	173	4.3	5.5	99.99	180	4.6	7.0	99.99	216	5.5	7.0	99.99	894.7
163.11	151	4.0	5.3	99.99	183	5.1	7.0	99.99	194	5.5	7.5	99.99	894.4
163.12	140	4.8	6.5	99.99	189	4.6	8.5	99.99	184	5.3	7.8	99.99	893.9
163.13	130	4.0	8.3	99.99	162	5.3	8.5	99.99	151	6.0	8.3	99.99	893.1
163.14	113	4.0	8.0	99.99	180	3.9	7.5	99.99	173	5.5	9.0	99.99	892.4
163.15	108	3.5	5.8	99.99	114	2.4	7.0	99.99	108	3.5	7.5	99.99	891.6
163.16	135	4.0	8.0	99.99	180	3.6	8.0	99.99	167	7.0	9.0	99.99	891.1
163.17	119	4.3	8.8	99.99	162	6.7	10.0	99.99	157	7.8	10.8	99.99	890.8
163.18	113	5.0	7.5	99.99	147	5.2	10.0	99.99	140	8.0	9.8	99.99	890.6
163.19	119	7.5	13.5	99.99	171	9.3	15.5	99.99	167	6.5	22.0	99.99	891.0
163.20	113	3.8	9.5	99.99	147	4.1	12.0	99.99	146	6.0	13.0	99.99	891.0
163.21	76	1.3	4.3	99.99	126	1.7	5.5	99.99	127	5.0	7.0	99.99	891.6
163.22	76	2.5	4.5	99.99	111	3.6	6.5	99.99	113	5.3	7.5	99.99	892.4
163.23	70	3.8	7.3	99.99	108	5.9	9.0	99.99	103	7.5	10.3	99.99	892.5

JULIAN DAY.HR	TEMPERATURES 3 M	10 M	30 M	DELTA TEMPS 10-3	30-3	30-10	STAB CLASS	DEW POINT	REL HUM	PRCP	RADIATION PARAMETERS SW SKY	SW REF	LW SKY	LW REF
163. 0	999.9	20.0	999.9	99.99	99.99	99.99		999.9	9999	0.00	0	0	9999	412
163. 1	999.9	19.9	999.9	99.99	99.99	99.99		999.9	9999	0.00	0	0	9999	410
163. 2	999.9	18.8	999.9	99.99	99.99	99.99		999.9	9999	0.00	0	0	9999	405
163. 3	999.9	18.4	999.9	99.99	99.99	99.99		999.9	9999	0.00	0	0	9999	405
163. 4	999.9	18.4	999.9	99.99	99.99	99.99		999.9	9999	0.00	0	0	9999	403
163. 5	999.9	18.4	999.9	99.99	99.99	99.99		999.9	9999	0.00	0	0	9999	396
163. 6	999.9	18.5	999.9	99.99	99.99	99.99		999.9	9999	0.00	5	0	9999	402
163. 7	999.9	19.4	999.9	99.99	99.99	99.99		999.9	9999	0.00	214	50	9999	430
163. 8	999.9	21.1	999.9	99.99	99.99	99.99		999.9	9999	0.00	370	80	9999	435
163. 9	999.9	23.0	999.9	99.99	99.99	99.99		999.9	9999	0.00	575	122	9999	458
163.10	999.9	24.4	999.9	99.99	99.99	99.99		999.9	9999	0.00	759	158	9999	488
163.11	999.9	25.9	999.9	99.99	99.99	99.99		999.9	9999	0.00	908	183	9999	519
163.12	999.9	27.7	999.9	99.99	99.99	99.99		999.9	9999	0.00	984	198	9999	542
163.13	999.9	29.8	999.9	99.99	99.99	99.99		999.9	9999	0.00	1019	204	9999	567
163.14	999.9	30.5	999.9	99.99	99.99	99.99		999.9	9999	0.00	983	198	9999	569
163.15	999.9	32.0	999.9	99.99	99.99	99.99		999.9	9999	0.00	695	144	9999	562
163.16	999.9	33.3	999.9	99.99	99.99	99.99		999.9	9999	0.00	803	171	9999	560
163.17	999.9	31.2	999.9	99.99	99.99	99.99		999.9	9999	0.00	88	18	9999	492
163.18	999.9	32.2	999.9	99.99	99.99	99.99		999.9	9999	0.00	387	87	9999	513
163.19	999.9	28.2	999.9	99.99	99.99	99.99		999.9	9999	0.00	76	18	9999	470
163.20	999.9	27.0	999.9	99.99	99.99	99.99		999.9	9999	0.00	0	0	9999	453
163.21	999.9	25.8	999.9	99.99	99.99	99.99		999.9	9999	0.00	0	0	9999	442
163.22	999.9	26.5	999.9	99.99	99.99	99.99		999.9	9999	0.00	0	0	9999	451
163.23	999.9	25.2	999.9	99.99	99.99	99.99		999.9	9999	0.00	0	0	9999	442

DAILY SUMMARIES

3 METER TEMP --- AVG = 999.9 MAX = 999.9 MIN = 999.9 AVG DEW POINT = 999.9 TOTAL PRCP = 0.00

10 METER WINDS -- AVG SPEED = 2.8 AVG DIR = 160 PEAK SPEED = 15.5 , OCCURRED DURING HOUR 19

NUMBER OF HOURS PER STABILITY CLASS A = 0 , B = 0, C = 0, D = 0, E = 0, F = 0, G = 0

WIPP METEOROLOGICAL DATA DAILY SUMMARY FOR 6/13/77

JULIAN DAY.HR	3 METER WIND DIR	SPD	PEAK SPD	TURB INT	10 METER WIND DIR	SPD	PEAK SPD	TURB INT	30 METER WIND DIR	SPD	PEAK SPD	TURB INT	BAROM PRESS
164. 0	81	2.5	5.8	99.99	120	2.9	7.0	99.99	116	5.8	9.0	99.99	892.5
164. 1	97	3.0	4.5	99.99	132	2.8	7.0	99.99	130	6.0	8.5	99.99	892.6
164. 2	108	4.0	7.0	99.99	144	6.4	9.0	99.99	146	7.5	10.0	99.99	892.6
164. 3	97	2.0	6.5	99.99	132	4.1	8.5	99.99	135	6.0	9.8	99.99	892.5
164. 4	103	3.0	3.8	99.99	144	3.5	6.0	99.99	146	6.5	9.0	99.99	892.6
164. 5	97	2.5	5.8	99.99	132	4.7	8.0	99.99	132	7.5	10.0	99.99	893.0
164. 6	119	3.0	5.5	99.99	144	4.9	8.5	99.99	146	6.0	9.5	99.99	893.6
164. 7	119	2.5	5.3	99.99	150	4.0	7.5	99.99	154	5.0	7.0	99.99	894.0
164. 8	108	4.0	5.1	99.99	219	4.1	6.0	99.99	135	6.0	6.8	99.99	894.3
164. 9	130	4.0	5.9	99.99	138	3.9	6.5	99.99	151	5.0	7.0	99.99	894.4
164.10	173	3.0	5.5	99.99	201	3.6	6.0	99.99	216	4.0	6.5	99.99	894.6
164.11	162	3.8	5.5	99.99	198	3.6	6.0	99.99	211	5.0	5.5	99.99	894.4
164.12	140	2.5	6.5	99.99	198	3.8	8.5	99.99	194	4.5	8.5	99.99	894.2
164.13	135	2.5	6.8	99.99	198	3.4	7.0	99.99	184	3.0	7.5	99.99	893.8
164.14	302	1.0	6.5	99.99	180	2.5	7.0	99.99	50	2.8	7.2	99.99	893.3
164.15	178	2.5	7.5	99.99	198	3.7	8.5	99.99	184	3.0	12.5	99.99	892.8
164.16	140	4.0	7.3	99.99	162	5.5	9.5	99.99	162	7.0	8.8	99.99	892.4
164.17	119	3.0	8.0	99.99	144	5.0	9.0	99.99	146	5.5	9.3	99.99	892.0
164.18	113	4.0	7.0	99.99	144	3.3	9.0	99.99	151	5.0	9.0	99.99	891.7
164.19	108	3.5	6.5	99.99	147	4.1	7.5	99.99	140	6.3	8.0	99.99	891.6
164.20	113	3.5	7.8	99.99	147	5.1	9.0	99.99	149	6.5	9.5	99.99	892.0
164.21	103	2.5	5.2	99.99	144	4.3	3.0	99.99	140	1.5	3.0	99.99	892.4
164.22	81	3.0	5.3	99.99	111	3.6	7.0	99.99	113	6.8	9.3	99.99	893.2
164.23	81	3.5	5.5	99.99	111	2.3	7.5	99.99	113	6.0	9.5	99.99	894.3

JULIAN DAY.HR	TEMPERATURES 3 M	10 M	30 M	DELTA TEMPS 10-3	30-3	30-10	STAB CLASS	DEW POINT	REL HUM	PRCP	RADIATION PARAMETERS SW SKY	SW REF	LW SKY	LW REF
164. 0	999.9	24.0	999.9	99.99	99.99	99.99		999.9	9999	0.00	0	0	9999	433
164. 1	999.9	24.1	999.9	99.99	99.99	99.99		999.9	9999	0.00	0	0	9999	436
164. 2	999.9	24.2	999.9	99.99	99.99	99.99		999.9	9999	0.00	0	0	9999	433
164. 3	999.9	22.7	999.9	99.99	99.99	99.99		999.9	9999	0.00	0	0	9999	423
164. 4	999.9	22.3	999.9	99.99	99.99	99.99		999.9	9999	0.00	0	0	9999	424
164. 5	999.9	21.7	999.9	99.99	99.99	99.99		999.9	9999	0.00	0	0	9999	419
164. 6	999.9	21.5	999.9	99.99	99.99	99.99		999.9	9999	0.00	11	3	9999	420
164. 7	999.9	21.0	999.9	99.99	99.99	99.99		999.9	9999	0.00	49	9	9999	419
164. 8	999.9	24.9	999.9	99.99	99.99	99.99		999.9	9999	0.00	380	88	9999	460
164. 9	999.9	28.0	999.9	99.99	99.99	99.99		999.9	9999	0.00	585	131	9999	493
164.10	999.9	29.8	999.9	99.99	99.99	99.99		999.9	9999	0.00	765	167	9999	529
164.11	999.9	31.4	999.9	99.99	99.99	99.99		999.9	9999	0.00	921	194	9999	561
164.12	999.9	33.5	999.9	99.99	99.99	99.99		999.9	9999	0.00	998	209	9999	591
164.13	999.9	35.0	999.9	99.99	99.99	99.99		999.9	9999	0.00	1033	214	9999	614
164.14	999.9	36.0	999.9	99.99	99.99	99.99		999.9	9999	0.00	999	208	9999	616
164.15	999.9	35.7	999.9	99.99	99.99	99.99		999.9	9999	0.00	900	191	9999	604
164.16	999.9	36.0	999.9	99.99	99.99	99.99		999.9	9999	0.00	782	170	9999	585
164.17	999.9	35.5	999.9	99.99	99.99	99.99		999.9	9999	0.00	556	125	9999	554
164.18	999.9	35.4	999.9	99.99	99.99	99.99		999.9	9999	0.00	337	77	9999	531
164.19	999.9	34.4	999.9	99.99	99.99	99.99		999.9	9999	0.00	129	32	9999	505
164.20	999.9	31.9	999.9	99.99	99.99	99.99		999.9	9999	0.00	0	0	9999	474
164.21	999.9	29.2	999.9	99.99	99.99	99.99		999.9	9999	0.00	0	0	9999	457
164.22	999.9	28.3	999.9	99.99	99.99	99.99		999.9	9999	0.00	0	0	9999	456
164.23	999.9	27.4	999.9	99.99	99.99	99.99		999.9	9999	0.00	0	0	9999	450

DAILY SUMMARIES

3 METER TEMP --- AVG = 999.9 MAX = 999.9 MIN = 999.9 AVG DEW POINT = 999.9 TOTAL PRCP = 0.00

10 METER WINDS -- AVG SPEED = 3.5 AVG DIR = 155 PEAK SPEED = 9.5 , OCCURRED DURING HOUR 16

NUMBER OF HOURS PER STABILITY CLASS A = 0 , B = 0, C = 0, D = 0, E = 0, F = 0, G = 0

WIPP METEOROLOGICAL DATA DAILY SUMMARY FOR 6/14/77

JULIAN DAY.HR	3 METER WIND DIR	SPD	PEAK SPD	TURB INT	10 METER WIND DIR	SPD	PEAK SPD	TURB INT	30 METER WIND DIR	SPD	PEAK SPD	TURB INT	BAROM PRESS
165. 0	76	5.5	9.0	99.99	114	6.6	11.0	99.99	103	4.3	12.8	99.99	895.1
165. 1	76	4.8	9.3	99.99	120	6.1	13.0	99.99	113	9.8	13.0	99.99	895.4
165. 2	76	5.0	11.0	99.99	114	6.3	13.5	99.99	108	9.0	16.0	99.99	895.8
165. 3	81	3.5	7.5	99.99	114	3.6	10.5	99.99	113	7.0	11.3	99.99	895.8
165. 4	103	1.8	6.0	99.99	132	2.8	6.5	99.99	130	5.0	9.5	99.99	895.8
165. 5	86	1.5	2.5	99.99	120	1.2	4.0	99.99	124	6.5	7.0	99.99	895.9
165. 6	92	2.0	3.5	99.99	132	2.2	4.5	99.99	135	6.3	8.0	99.99	896.1
165. 7	92	2.3	4.0	99.99	126	1.9	5.0	99.99	124	5.3	8.0	99.99	896.4
165. 8	146	4.0	4.5	99.99	192	3.3	7.0	99.99	189	3.5	8.0	99.99	896.6
165. 9	211	1.5	4.3	99.99	219	2.3	5.0	99.99	227	2.0	5.3	99.99	897.2
165.10	162	2.5	4.0	99.99	183	2.2	4.5	99.99	205	2.8	4.5	99.99	897.5
165.11	119	3.0	6.5	99.99	147	4.5	7.5	99.99	151	5.0	7.3	99.99	897.6
165.12	113	4.8	7.8	99.99	99	5.5	10.0	99.99	130	6.5	10.3	99.99	897.4
165.13	108	5.3	9.5	99.99	162	6.3	10.5	99.99	140	5.3	10.5	99.99	896.8
165.14	113	5.5	9.0	99.99	9999	999.9	999.9	99.99	151	9.5	13.5	99.99	9999.0
165.15	140	5.5	10.5	99.99	126	4.1	12.0	99.99	113	7.5	13.0	99.99	895.3
165.16	76	4.0	9.8	99.99	120	5.9	12.5	99.99	108	6.5	12.5	99.99	895.1
165.17	135	2.8	9.5	99.99	162	5.1	5.5	99.99	162	5.0	11.8	99.99	894.9
165.18	103	4.0	8.0	99.99	126	5.8	9.5	99.99	135	7.0	9.8	99.99	894.8
165.19	170	3.0	7.8	99.99	159	3.5	9.5	99.99	157	4.0	10.3	99.99	895.1
165.20	308	5.0	9.3	99.99	330	6.8	11.0	99.99	335	7.5	12.0	99.99	896.8
165.21	7	6.0	8.5	99.99	36	7.0	10.0	99.99	34	10.5	12.0	99.99	897.5
165.22	34	6.5	13.5	99.99	42	10.0	16.5	99.99	75	11.5	18.0	99.99	897.6
165.23	50	5.0	10.8	99.99	84	8.2	12.5	99.99	88	10.0	13.8	99.99	897.2

JULIAN DAY.HR	TEMPERATURES 3 M	10 M	30 M	DELTA TEMPS 10-3	30-3	30-10	STAB CLASS	DEW POINT	REL HUM	PRCP	RADIATION PARAMETERS SW SKY	SW REF	LW SKY	LW REF
165. 0	999.9	27.1	999.9	99.99	99.99	99.99		999.9	9999	0.00	0	0	9999	454
165. 1	999.9	25.6	999.9	99.99	99.99	99.99		999.9	9999	0.00	0	0	9999	444
165. 2	999.9	22.4	999.9	99.99	99.99	99.99		999.9	9999	0.00	0	0	9999	429
165. 3	999.9	21.7	999.9	99.99	99.99	99.99		999.9	9999	0.00	0	0	9999	424
165. 4	999.9	21.2	999.9	99.99	99.99	99.99		999.9	9999	0.00	0	0	9999	419
165. 5	999.9	20.5	999.9	99.99	99.99	99.99		999.9	9999	0.00	0	0	9999	415
165. 6	999.9	20.7	999.9	99.99	99.99	99.99		999.9	9999	0.00	13	4	9999	418
165. 7	999.9	22.0	999.9	99.99	99.99	99.99		999.9	9999	0.00	165	41	9999	438
165. 8	999.9	25.7	999.9	99.99	99.99	99.99		999.9	9999	0.00	382	89	9999	463
165. 9	999.9	26.4	999.9	99.99	99.99	99.99		999.9	9999	0.00	579	130	9999	491
165.10	999.9	28.6	999.9	99.99	99.99	99.99		999.9	9999	0.00	759	166	9999	539
165.11	999.9	30.9	999.9	99.99	99.99	99.99		999.9	9999	0.00	916	194	9999	557
165.12	32.4	31.3	31.1	-1.22	-1.06	-0.28	D	999.9	9999	0.00	990	208	9999	579
165.13	34.0	32.8	32.0	-1.26	-1.69	-0.86	A	999.9	9999	0.00	1026	213	9999	591
165.14	35.2	999.9	33.2	-0.88	-1.69	-1.26	A	999.9	9999	99.99	9999	9999	9999	9999
165.15	34.8	33.8	33.2	-1.14	-1.40	-0.70	A	999.9	9999	0.00	879	188	9999	582
165.16	35.1	33.9	33.2	-5.22	-1.68	-0.90	A	999.9	9999	0.00	736	161	9999	569
165.17	34.7	34.0	33.2	-0.74	-0.86	-0.56	A	999.9	9999	0.00	543	122	9999	543
165.18	33.6	33.4	33.1	-0.30	-0.24	-0.37	B	999.9	9999	0.00	206	45	9999	511
165.19	32.2	32.2	32.2	-0.02	0.31	-0.11	D	999.9	9999	0.00	27	5	9999	488
165.20	27.1	27.0	26.9	-0.14	0.12	-0.20	D	999.9	9999	0.00	0	0	9999	461
165.21	21.6	21.8	22.7	0.09	1.37	0.84	G	999.9	9999	0.00	0	0	9999	422
165.22	24.0	24.2	24.8	0.11	1.03	0.48	F	999.9	9999	0.00	0	0	9999	430
165.23	25.9	26.0	26.4	0.06	0.76	0.25	E	999.9	9999	0.00	0	0	9999	440

DAILY SUMMARIES

3 METER TEMP --- AVG = 30.9 MAX = 35.2 MIN = 21.6 AVG DEW POINT = 999.9 TOTAL PRCP = 0.00

10 METER WINDS -- AVG SPEED = 3.1 AVG DIR = 114 PEAK SPEED = 16.5 , OCCURRED DURING HOUR 22

NUMBER OF HOURS PER STABILITY CLASS A = 5 , B = 1, C = 0, D = 3, E = 1, F = 1, G = 1

WIPP METEOROLOGICAL DATA DAILY SUMMARY FOR 6/15/77

JULIAN DAY.HR	3 METER WIND DIR	SPD	PEAK SPD	TURB INT	10 METER WIND DIR	SPD	PEAK SPD	TURB INT	30 METER WIND DIR	SPD	PEAK SPD	TURB INT	BAROM PRESS
166. 0	88	2.5	7.8	99.99	108	2.3	10.0	99.99	126	7.0	11.5	99.99	896.7
166. 1	86	2.0	4.5	99.99	84	2.6	5.5	99.99	150	4.0	9.3	99.99	896.1
166. 2	76	3.5	4.5	99.99	126	3.3	7.5	99.99	110	7.8	9.5	99.99	895.7
166. 3	92	1.5	5.3	99.99	102	2.1	5.0	99.99	131	6.3	9.3	99.99	895.7
166. 4	81	1.0	2.5	99.99	90	2.1	4.0	99.99	131	5.0	7.0	99.99	896.1
166. 5	81	2.0	3.3	99.99	108	2.0	5.0	99.99	123	5.5	7.3	99.99	896.1
166. 6	76	2.5	4.3	99.99	108	2.7	5.0	99.99	115	6.0	7.3	99.99	896.2
166. 7	86	2.3	4.8	99.99	72	2.4	5.5	99.99	121	6.0	7.5	99.99	896.5
166. 8	92	2.5	4.5	99.99	108	2.6	11.0	99.99	126	4.3	8.0	99.99	896.6
166. 9	113	3.0	5.5	99.99	156	3.5	6.0	99.99	148	4.5	7.0	99.99	897.2
166.10	135	3.0	5.5	99.99	180	3.6	6.0	99.99	184	3.5	5.8	99.99	897.0
166.11	124	4.0	6.0	99.99	168	4.1	7.0	99.99	167	5.0	7.0	99.99	896.8
166.12	162	3.0	7.5	99.99	186	4.6	8.5	99.99	189	3.0	8.3	99.99	896.4
166.13	140	3.5	6.8	99.99	180	3.6	8.0	99.99	173	5.5	8.0	99.99	895.7
166.14	205	3.0	7.8	99.99	222	3.5	8.5	99.99	205	3.5	8.5	99.99	895.0
166.15	146	6.0	8.5	99.99	120	2.3	9.0	99.99	167	6.5	9.8	99.99	894.2
166.16	324	2.8	7.5	99.99	180	1.4	5.0	99.99	9999	999.9	9.0	99.99	893.2
166.17	140	4.5	7.5	99.99	132	4.1	8.5	99.99	135	6.0	9.0	99.99	892.8
166.18	146	4.0	7.9	99.99	165	5.1	9.5	99.99	151	5.5	8.5	99.99	892.8
166.19	146	3.0	8.5	99.99	168	4.1	10.0	99.99	151	5.3	9.0	99.99	893.2
166.20	146	2.5	4.5	99.99	147	3.4	6.5	99.99	151	4.8	7.3	99.99	893.2
166.21	167	3.5	5.5	99.99	171	0.4	5.0	99.99	167	6.0	7.0	99.99	9999.0
166.22	157	4.0	5.5	99.99	162	4.4	7.0	99.99	159	7.0	8.0	99.99	893.6
166.23	162	3.5	7.0	99.99	168	4.4	9.0	99.99	167	6.0	10.3	99.99	894.0

JULIAN DAY.HR	TEMPERATURES 3 M	10 M	30 M	DELTA TEMPS 10-3	30-3	30-10	STAB CLASS	DEW POINT	REL HUM	PRCP	RADIATION PARAMETERS SW SKY	SW REF	LW SKY	LW REF
166. 0	25.7	26.0	26.7	0.24	1.31	0.61	F	999.9	9999	0.00	0	0	9999	441
166. 1	25.0	25.6	26.6	0.61	1.98	0.90	G	999.9	9999	0.00	0	0	9999	430
166. 2	24.1	24.1	24.4	-0.10	0.64	0.29	E	999.9	9999	0.00	0	0	9999	430
166. 3	22.8	22.2	23.5	0.04	0.94	0.44	F	999.9	9999	0.00	0	0	9999	420
166. 4	20.6	21.2	23.2	0.53	2.91	1.93	G	999.9	9999	0.00	0	0	9999	412
166. 5	20.9	21.1	21.9	0.13	1.36	0.77	F	999.9	9999	0.00	0	0	9999	415
166. 6	20.4	20.4	21.0	-0.02	0.88	0.44	F	999.9	9999	0.00	13	4	9999	416
166. 7	22.0	21.9	21.8	-0.18	0.10	-0.18	D	999.9	9999	0.00	163	41	9999	433
166. 8	25.7	24.1	24.8	-0.52	-0.55	-0.46	A	999.9	9999	0.00	369	85	9999	455
166. 9	27.4	26.9	26.5	-0.55	-0.64	-0.54	A	999.9	9999	0.00	572	127	9999	494
166.10	29.6	29.0	28.6	-0.61	-0.69	-0.52	A	999.9	9999	0.00	752	162	9999	534
166.11	31.5	31.0	30.2	-0.57	-1.00	-0.89	A	999.9	9999	0.00	897	188	9999	566
166.12	32.1	31.3	31.2	-0.83	-0.49	-0.11	D	999.9	9999	0.00	975	202	9999	587
166.13	34.1	33.2	32.6	-0.88	-1.11	-0.70	A	999.9	9999	0.00	1010	208	9999	613
166.14	34.5	34.4	33.8	-0.17	-0.41	-0.72	A	999.9	9999	0.00	977	202	9999	611
166.15	35.4	41.3	34.2	-0.52	-0.85	-0.83	A	999.9	9999	0.00	895	191	9999	614
166.16	34.6	34.4	34.2	-0.26	-0.10	-0.40	A	999.9	9999	0.00	741	161	9999	593
166.17	36.0	35.1	34.4	-1.06	-1.29	-0.72	A	999.9	9999	0.00	544	121	9999	557
166.18	35.0	34.3	33.8	-0.71	-0.75	-0.51	A	999.9	9999	0.00	342	78	9999	530
166.19	999.9	35.3	999.9	99.99	99.99	99.99		999.9	9999	0.00	37	0	9999	505
166.20	999.9	33.4	999.9	99.99	99.99	99.99		999.9	9999	0.00	0	4	9999	486
166.21	999.9	32.1	999.9	99.99	99.99	99.99		999.9	9999	0.00	7	0	9999	481
166.22	999.9	30.8	999.9	99.99	99.99	99.99		999.9	9999	0.00	0	0	9999	473
166.23	999.9	29.7	999.9	99.99	99.99	99.99		999.9	9999	0.00	7	0	9999	462

DAILY SUMMARIES

3 METER TEMP --- AVG = 28.3 MAX = 36.0 MIN = 20.4 AVG DEW POINT = 999.9 TOTAL PRCP = 0.00

10 METER WINDS -- AVG SPEED = 2.5 AVG DIR = 149 PEAK SPEED = 11.0 , OCCURRED DURING HOUR 8

NUMBER OF HOURS PER STABILITY CLASS A = 10 , B = 0, C = 0, D = 2, E = 1, F = 4, G = 2

WIPP METEOROLOGICAL DATA DAILY SUMMARY FOR 6/16/77

JULIAN DAY.HR	3 METER WIND DIR	SPD	PEAK SPD	TURB INT	10 METER WIND DIR	SPD	PEAK SPD	TURB INT	30 METER WIND DIR	SPD	PEAK SPD	TURB INT	BAROM PRESS
167. 0	146	1.8	5.5	99.99	162	3.0	7.0	99.99	146	5.5	8.5	99.99	894.0
167. 1	138	2.5	3.8	99.99	144	3.7	6.0	99.99	140	6.0	8.0	99.99	893.2
167. 2	135	1.8	4.5	99.99	162	3.4	6.5	99.99	140	6.0	8.0	99.99	892.8
167. 3	135	2.0	4.9	99.99	138	4.2	6.5	99.99	140	6.5	7.8	99.99	892.8
167. 4	140	3.0	6.3	99.99	150	4.4	6.0	99.99	146	7.5	9.8	99.99	892.4
167. 5	146	3.5	6.8	99.99	168	5.0	8.0	99.99	151	7.0	9.5	99.99	892.4
167. 6	124	1.5	5.2	99.99	126	2.7	6.0	99.99	140	5.0	8.5	99.99	854.3
167. 7	146	1.9	4.8	99.99	156	1.5	6.0	99.99	130	4.8	7.0	99.99	894.0
167. 8	157	2.8	4.3	99.99	162	3.0	5.5	99.99	157	4.0	6.0	99.99	894.0
167. 9	178	3.5	4.5	99.99	180	4.0	6.0	99.99	178	5.0	6.0	99.99	894.0
167.10	189	4.5	6.0	99.99	186	4.5	7.0	99.99	194	6.0	7.0	99.99	893.5
167.11	194	4.0	7.5	99.99	204	3.8	8.5	99.99	200	5.0	8.5	99.99	893.4
167.12	200	3.0	8.0	99.99	216	4.0	6.5	99.99	221	3.5	9.0	99.99	893.1
167.13	189	3.0	7.0	99.99	216	3.5	6.5	99.99	9999	5.5	7.5	99.99	892.4
167.14	297	2.0	7.0	99.99	234	1.9	7.0	99.99	9999	3.5	6.0	99.99	891.6
167.15	67	1.5	5.0	99.99	18	2.3	7.5	99.99	9999	2.0	4.8	99.99	890.9
167.16	34	0.5	5.0	99.99	18	2.5	6.5	99.99	9999	1.0	6.0	99.99	890.7
167.17	88	1.5	4.5	99.99	18	2.2	5.5	99.99	9999	2.5	5.5	99.99	889.8
167.18	99	1.5	4.0	99.99	12	3.0	5.5	99.99	9999	3.0	4.8	99.99	889.8
167.19	167	2.0	8.0	99.99	180	2.0	5.0	99.99	9999	3.0	4.5	99.99	889.8
167.20	146	5.0	9.5	99.99	144	7.4	5.0	99.99	9999	8.5	12.0	99.99	889.8
167.21	151	6.5	10.0	99.99	144	8.1	8.5	99.99	9999	10.0	12.3	99.99	890.2
167.22	151	6.5	10.0	99.99	144	8.5	11.5	99.99	9999	10.5	13.0	99.99	890.6
167.23	157	6.5	11.0	99.99	150	8.5	7.0	99.99	9999	10.0	13.5	99.99	890.9

JULIAN DAY.HR	TEMPERATURES 3 M	10 M	30 M	DELTA TEMPS 10-3	30-3	30-10	STAB CLASS	DEW POINT	REL HUM	PRCP	RADIATION PARAMETERS SW SKY	SW REF	LW SKY	LW REF
167. 0	999.9	27.1	999.9	99.99	99.99	99.99		999.9	9999	0.00	0	0	9999	443
167. 1	999.9	27.0	999.9	99.99	99.99	99.99		999.9	9999	0.00	0	0	9999	446
167. 2	999.9	26.0	999.9	99.99	99.99	99.99		999.9	9999	0.00	7	0	9999	441
167. 3	999.9	24.9	999.9	99.99	99.99	99.99		999.9	9999	0.00	0	0	9999	435
167. 4	999.9	24.6	999.9	99.99	99.99	99.99		999.9	9999	0.00	0	0	9999	432
167. 5	999.9	24.4	999.9	99.99	99.99	99.99		999.9	9999	0.00	0	0	9999	430
167. 6	999.9	23.9	999.9	99.99	99.99	99.99		999.9	9999	0.00	0	0	9999	427
167. 7	999.9	24.4	999.9	99.99	99.99	99.99		999.9	9999	0.00	160	33	9999	446
167. 8	999.9	27.6	999.9	99.99	99.99	99.99		999.9	9999	0.00	388	83	9999	473
167. 9	999.9	31.1	999.9	99.99	99.99	99.99		999.9	9999	0.00	605	131	9999	514
167.10	32.2	31.5	30.8	-0.68	-1.02	-0.79	A	999.9	9999	0.00	771	169	9999	546
167.11	34.0	33.3	32.6	-0.78	-1.08	-0.79	A	999.9	9999	0.00	921	196	9999	577
167.12	34.7	34.2	34.0	-0.60	-0.42	-0.29	D	999.9	9999	0.00	1014	213	9999	606
167.13	36.0	35.8	35.4	-0.33	-0.32	-0.47	A	999.9	9999	0.00	1026	217	9999	636
167.14	37.0	36.8	36.5	-0.36	-0.20	-0.35	B	999.9	9999	0.00	1003	212	9999	643
167.15	38.2	37.7	37.2	-0.50	-0.63	-0.60	A	999.9	9999	0.00	905	194	9999	632
167.16	38.2	37.8	645.5	-0.52	-0.38	-0.32	C	999.9	9999	0.00	748	166	9999	618
167.17	38.4	38.0	37.7	-0.37	-0.34	-0.44	A	999.9	9999	0.00	548	123	9999	579
167.18	38.0	37.9	37.7	-0.20	-0.01	-0.27	D	999.9	9999	0.00	348	78	9999	550
167.19	38.0	37.8	37.7	-0.14	0.04	-0.23	D	999.9	9999	0.00	131	29	9999	520
167.20	34.0	34.2	34.2	0.08	0.50	-0.03	E	999.9	9999	0.00	0	0	9999	492
167.21	31.9	32.2	32.3	0.15	0.68	0.05	E	999.9	9999	0.00	0	0	9999	479
167.22	30.6	30.8	31.0	0.11	0.68	0.10	E	999.9	9999	0.00	0	0	9999	472
167.23	29.3	29.5	29.6	0.14	0.67	0.05	E	999.9	9999	0.00	0	0	9999	465

DAILY SUMMARIES

3 METER TEMP -- AVG = 35.0 MAX = 38.4 MIN = 29.3 AVG DEW POINT = 999.9 TOTAL PRCP = 0.00

10 METER WINDS -- AVG SPEED = 2.9 AVG DIR = 157 PEAK SPEED = 11.5 , OCCURRED DURING HOUR 22

NUMBER OF HOURS PER STABILITY CLASS A = 5 , B = 1, C = 1, D = 3, E = 4, F = 0, G = 0

WIPP METEOROLOGICAL DATA DAILY SUMMARY FOR 6/17/77

JULIAN DAY.HR	3 METER WIND DIR	SPD	PEAK SPD	TURB INT	10 METER WIND DIR	SPD	PEAK SPD	TURB INT	30 METER WIND DIR	SPD	PEAK SPD	TURB INT	BAROM PRESS
168. 0	157	5.5	8.5	99.99	150	8.7	8.0	99.99	9999	9.0	13.3	99.99	891.2
168. 1	151	5.0	7.0	99.99	156	5.7	7.5	99.99	9999	7.5	11.5	99.99	891.3
168. 2	146	3.0	7.0	99.99	144	5.5	10.0	99.99	9999	7.0	9.8	99.99	891.3
168. 3	146	4.0	7.0	99.99	144	6.5	8.0	99.99	9999	8.0	10.3	99.99	891.3
168. 4	146	3.0	5.5	99.99	144	5.4	8.0	99.99	9999	7.0	9.5	99.99	891.3
168. 5	140	3.0	5.0	99.99	138	4.9	7.0	99.99	9999	7.0	9.0	99.99	891.3
168. 6	151	3.0	5.0	99.99	138	4.4	7.0	99.99	9999	6.0	9.5	99.99	891.3
168. 7	140	2.5	5.0	99.99	138	3.6	5.0	99.99	9999	5.5	9.0	99.99	891.6
168. 8	151	3.0	5.0	99.99	132	3.9	6.0	99.99	9999	4.0	8.0	99.99	892.2
168. 9	216	3.0	5.0	99.99	180	3.1	5.5	99.99	9999	3.5	6.3	99.99	892.5
168.10	216	2.0	4.5	99.99	234	2.9	5.0	99.99	9999	2.5	5.5	99.99	892.6
168.11	270	2.5	7.0	99.99	282	2.3	5.5	99.99	9999	3.0	6.0	99.99	892.4
168.12	313	2.0	6.0	99.99	276	3.2	5.0	99.99	205	3.3	7.5	99.99	892.0
168.13	243	3.0	6.0	99.99	276	2.0	6.5	99.99	194	3.8	7.5	99.99	891.7
168.14	146	2.5	8.0	99.99	150	2.4	6.5	99.99	292	3.5	8.5	99.99	891.0
168.15	135	2.5	5.0	99.99	216	2.8	8.0	99.99	45	4.0	5.8	99.99	890.6
168.16	270	3.0	8.0	99.99	210	5.0	5.0	99.99	50	4.0	7.8	99.99	890.0
168.17	72	1.5	7.5	99.99	336	2.5	6.5	99.99	67	2.5	8.0	99.99	889.5
168.18	335	1.5	6.0	99.99	240	2.0	7.0	99.99	86	2.5	7.5	99.99	889.1
168.19	146	1.0	5.5	99.99	150	0.7	6.0	99.99	173	1.5	6.0	99.99	889.0
168.20	124	1.0	2.5	99.99	144	3.5	6.5	99.99	149	5.0	6.5	99.99	889.0
168.21	146	5.0	7.5	99.99	132	7.5	3.0	99.99	149	9.0	12.3	99.99	889.4
168.22	151	5.0	9.0	99.99	138	7.5	7.5	99.99	151	6.0	12.3	99.99	889.9
168.23	151	6.0	10.5	99.99	144	8.6	6.0	99.99	151	5.0	9.3	99.99	890.3

JULIAN DAY.HR	TEMPERATURES 3 M	10 M	30 M	DELTA TEMPS 10-3	30-3	30-10	STAB CLASS	DEW POINT	REL HUM	PRCP	RADIATION PARAMETERS SW SKY	SW REF	LW SKY	LW REF
168. 0	28.2	28.4	28.5	0.13	0.61	0.02	E	999.9	9999	0.00	0	0	9999	456
168. 1	26.5	26.8	26.9	0.18	0.68	0.04	E	999.9	9999	0.00	0	0	9999	449
168. 2	24.5	24.8	25.1	0.24	1.00	0.29	E	999.9	9999	0.00	0	0	9999	435
168. 3	23.7	23.9	24.2	0.18	0.76	0.14	E	999.9	9999	0.00	0	0	9999	431
168. 4	22.2	22.4	22.7	0.14	0.73	0.12	E	999.9	9999	0.00	0	0	9999	425
168. 5	21.6	21.9	22.3	0.22	0.97	0.29	E	999.9	9999	0.00	0	0	9999	421
168. 6	20.9	21.2	21.8	0.25	1.19	0.40	F	999.9	9999	0.00	13	3	9999	419
168. 7	22.8	22.8	22.8	-0.13	0.26	-0.08	E	999.9	9999	0.00	174	43	9999	437
168. 8	26.4	26.0	25.7	-0.38	-0.34	-0.41	A	999.9	9999	0.00	393	93	9999	468
168. 9	29.1	28.5	28.2	-0.67	-0.60	-0.38	A	999.9	9999	0.00	601	138	9999	504
168.10	31.5	31.2	31.0	-0.32	-0.23	-0.39	A	999.9	9999	0.00	792	175	9999	551
168.11	34.2	34.1	33.6	-0.19	-0.38	-0.60	A	999.9	9999	0.00	940	204	9999	591
168.12	36.3	35.4	35.3	-0.97	-0.71	-0.21	D	999.9	9999	0.00	1034	221	9999	618
168.13	37.6	37.3	37.1	-0.37	-0.22	-0.32	C	999.9	9999	0.00	1050	226	9999	652
168.14	39.1	39.1	38.4	-0.06	-0.39	-0.79	A	999.9	9999	0.00	1021	219	9999	654
168.15	39.9	39.6	39.1	-0.37	-0.58	-0.64	A	999.9	9999	0.00	912	199	9999	639
168.16	41.0	40.4	39.9	-0.63	-0.88	-0.66	A	999.9	9999	0.00	761	172	9999	619
168.17	39.2	39.0	38.8	-0.23	-0.10	-0.29	D	999.9	9999	0.00	556	128	9999	597
168.18	39.3	39.1	38.8	-0.34	-0.22	-0.34	B	999.9	9999	0.00	347	79	9999	552
168.19	38.8	38.9	38.8	-0.05	0.22	-0.21	D	999.9	9999	0.00	120	28	9999	526
168.20	34.0	35.5	36.7	1.91	3.51	1.13	G	999.9	9999	0.00	0	0	9999	474
168.21	32.8	33.1	33.3	0.25	0.81	0.11	E	999.9	9999	0.00	0	0	9999	484
168.22	31.0	31.2	31.4	0.20	0.76	0.10	E	999.9	9999	0.00	0	0	9999	472
168.23	29.1	29.2	29.3	-3.87	0.62	0.03	E	999.9	9999	0.00	0	0	9999	463

DAILY SUMMARIES

3 METER TEMP --- AVG = 31.2 MAX = 41.0 MIN = 20.9 AVG DEW POINT = 999.9 TOTAL PRCP = 0.00

10 METER WINDS -- AVG SPEED = 3.2 AVG DIR = 156 PEAK SPEED = 10.0 , OCCURRED DURING HOUR 2

NUMBER OF HOURS PER STABILITY CLASS A = 7 , B = 1, C = 1, D = 3, E = 10, F = 1, G = 1

WIPP METEOROLOGICAL DATA DAILY SUMMARY FOR 6/18/77

JULIAN DAY.HR	3 METER WIND DIR	SPD	PEAK SPD	TURB INT	10 METER WIND DIR	SPD	PEAK SPD	TURB INT	30 METER WIND DIR	SPD	PEAK SPD	TURB INT	BAROM PRESS
169. 0	9999	999.9	999.9	99.99	144	7.9	9.0	99.99	157	10.0	13.5	99.99	890.6
169. 1	9999	999.9	999.9	99.99	156	7.0	15.0	99.99	157	8.0	12.5	99.99	890.7
169. 2	9999	999.9	999.9	99.99	150	6.8	6.5	99.99	140	8.5	11.5	99.99	890.7
169. 3	9999	999.9	999.9	99.99	144	5.9	6.0	99.99	146	7.5	11.0	99.99	890.7
169. 4	9999	999.9	999.9	99.99	144	4.6	4.5	99.99	135	6.0	9.3	99.99	890.8
169. 5	9999	999.9	999.9	99.99	144	3.9	6.5	99.99	132	5.0	9.5	99.99	891.0
169. 6	9999	999.9	999.9	99.99	120	3.1	7.5	99.99	135	6.5	7.3	99.99	891.3
169. 7	9999	999.9	999.9	99.99	114	1.3	5.5	99.99	135	5.0	7.0	99.99	892.1
169. 8	9999	999.9	999.9	99.99	156	2.6	3.5	99.99	157	3.0	6.5	99.99	892.6
169. 9	9999	999.9	999.9	99.99	204	2.5	5.0	99.99	211	3.0	4.5	99.99	893.0
169.10	9999	999.9	999.9	99.99	138	1.7	3.5	99.99	216	1.5	3.8	99.99	893.1
169.11	9999	999.9	999.9	99.99	156	1.1	3.5	99.99	248	0.5	3.5	99.99	893.2
169.12	9999	999.9	999.9	99.99	342	2.3	3.5	99.99	313	1.0	4.0	99.99	893.1
169.13	9999	999.9	999.9	99.99	204	1.5	4.0	99.99	302	1.0	4.3	99.99	892.6
169.14	9999	999.9	999.9	99.99	6	1.1	5.0	99.99	167	1.0	5.5	99.99	891.8
169.15	9999	999.9	999.9	99.99	204	3.4	6.5	99.99	130	5.0	7.5	99.99	891.3
169.16	9999	999.9	999.9	99.99	204	3.2	7.0	99.99	259	4.5	8.0	99.99	890.6
169.17	9999	999.9	999.9	99.99	180	3.6	7.0	99.99	72	3.0	7.5	99.99	890.0
169.18	9999	999.9	999.9	99.99	180	4.4	7.0	99.99	313	4.0	7.0	99.99	889.7
169.19	9999	999.9	999.9	99.99	216	4.3	7.0	99.99	137	4.5	10.5	99.99	889.7
169.20	9999	999.9	999.9	99.99	156	3.2	11.5	99.99	153	4.0	6.3	99.99	889.7
169.21	9999	999.9	999.9	99.99	144	7.8	3.5	99.99	148	9.3	11.0	99.99	889.9
169.22	9999	999.9	999.9	99.99	144	9.3	9.5	99.99	148	12.0	15.5	99.99	890.9
169.23	9999	999.9	999.9	99.99	156	10.6	14.5	99.99	153	11.0	16.0	99.99	891.5

JULIAN DAY.HR	TEMPERATURES 3 M	10 M	30 M	DELTA TEMPS 10-3	30-3	30-10	STAB CLASS	DEW POINT	REL HUM	PRCP	RADIATION PARAMETERS SW SKY	SW REF	LW SKY	LW REF
169. 0	27.4	27.6	27.7	0.09	0.58	0.03	E	999.9	9999	0.00	0	0	9999	455
169. 1	25.8	26.0	26.1	0.08	0.57	0.04	E	999.9	9999	0.00	0	0	9999	445
169. 2	24.4	24.7	24.8	0.18	0.69	0.04	E	999.9	9999	0.00	0	0	9999	437
169. 3	23.6	23.9	24.0	0.14	0.71	0.11	E	999.9	9999	0.00	0	0	9999	431
169. 4	22.7	23.1	24.0	0.35	1.57	0.77	F	999.9	9999	0.00	0	0	9999	425
169. 5	22.0	22.8	23.9	0.71	2.22	1.05	G	999.9	9999	0.00	0	0	9999	420
169. 6	20.5	20.9	22.2	0.36	2.04	1.21	G	999.9	9999	0.00	14	4	9999	416
169. 7	22.5	22.5	22.8	-0.06	0.58	0.14	E	999.9	9999	0.00	135	33	9999	432
169. 8	27.8	27.6	27.3	-0.20	-0.15	-0.39	A	999.9	9999	0.00	390	93	9999	474
169. 9	30.2	29.9	29.4	-0.42	-0.45	-0.47	A	999.9	9999	0.00	595	138	9999	508
169.10	32.5	31.9	31.5	-0.61	-0.66	-0.51	A	999.9	9999	0.00	783	175	9999	557
169.11	33.8	33.6	33.4	-0.24	-0.01	-0.26	D	999.9	9999	0.00	920	200	9999	598
169.12	35.2	35.1	35.1	-0.20	0.16	-0.08	E	999.9	9999	0.00	1011	216	9999	631
169.13	36.9	36.7	36.5	-0.33	-0.21	-0.31	C	999.9	9999	0.00	1025	218	9999	651
169.14	37.3	37.0	36.8	-0.38	-0.31	-0.37	B	999.9	9999	0.00	993	213	9999	654
169.15	39.5	38.8	38.2	-0.77	-1.04	-0.73	A	999.9	9999	0.00	914	199	9999	624
169.16	37.8	37.6	37.3	-0.30	-0.21	-0.35	B	999.9	9999	0.00	114	20	9999	548
169.17	40.1	39.6	39.1	-0.52	-0.74	-0.68	A	999.9	9999	0.00	589	138	9999	589
169.18	37.2	37.2	37.2	-0.06	0.26	-0.14	D	999.9	9999	0.00	96	19	9999	521
169.19	36.7	36.8	36.9	0.06	0.43	-0.07	E	999.9	9999	0.00	108	27	9999	513
169.20	32.0	35.2	36.1	3.22	4.46	0.78	F	999.9	9999	0.00	0	0	9999	469
169.21	32.7	33.0	33.2	0.20	0.75	0.08	E	999.9	9999	0.00	0	0	9999	482
169.22	30.9	31.1	31.2	0.12	0.65	0.06	E	999.9	9999	0.00	0	0	9999	474
169.23	28.7	28.8	28.8	0.06	0.46	-0.06	E	999.9	9999	0.00	0	0	9999	461

DAILY SUMMARIES

3 METER TEMP --- AVG = 30.8 MAX = 40.1 MIN = 20.5 AVG DEW POINT = 999.9 TOTAL PRCP = 0.00

10 METER WINDS -- AVG SPEED = 3.7 AVG DIR = 157 PEAK SPEED = 15.0 , OCCURRED DURING HOUR 1

NUMBER OF HOURS PER STABILITY CLASS A = 5, B = 2, C = 1, D = 2, E = 10, F = 2, G = 2

WIPP METEOROLOGICAL DATA DAILY SUMMARY FOR 6/19/77

JULIAN DAY.HR	3 METER WIND DIR	3 METER WIND SPD	3 METER WIND PEAK SPD	3 METER WIND TURB INT	10 METER WIND DIR	10 METER WIND SPD	10 METER WIND PEAK SPD	10 METER WIND TURB INT	30 METER WIND DIR	30 METER WIND SPD	30 METER WIND PEAK SPD	30 METER WIND TURB INT	BAROM PRESS
170. 0	9999	999.9	999.9	99.99	150	10.5	15.0	99.99	148	12.0	17.0	99.99	891.7
170. 1	9999	999.9	999.9	99.99	156	9.3	17.0	99.99	145	9.0	15.5	99.99	891.6
170. 2	9999	999.9	999.9	99.99	144	7.1	14.5	99.99	145	8.5	13.0	99.99	891.8
170. 3	9999	999.9	999.9	99.99	150	6.8	5.5	99.99	148	8.5	12.0	99.99	891.8
170. 4	9999	999.9	999.9	99.99	150	6.0	11.5	99.99	142	8.0	11.0	99.99	891.8
170. 5	9999	999.9	999.9	99.99	150	3.5	10.7	99.99	148	6.0	9.5	99.99	892.4
170. 6	9999	999.9	999.9	99.99	9999	999.9	999.9	99.99	9999	999.9	999.9	99.99	9999.0
170. 7	9999	999.9	999.9	99.99	9999	999.9	999.9	99.99	9999	999.9	999.9	99.99	9999.0
170. 8	9999	999.9	999.9	99.99	9999	999.9	999.9	99.99	9999	999.9	999.9	99.99	9999.0
170. 9	9999	999.9	999.9	99.99	9999	999.9	999.9	99.99	9999	999.9	999.9	99.99	9999.0
170.10	9999	999.9	999.9	99.99	9999	999.9	999.9	99.99	9999	999.9	999.9	99.99	9999.0
170.11	9999	999.9	999.9	99.99	9999	999.9	999.9	99.99	9999	999.9	999.9	99.99	9999.0
170.12	9999	999.9	999.9	99.99	9999	999.9	999.9	99.99	9999	999.9	999.9	99.99	9999.0
170.13	9999	999.9	999.9	99.99	9999	999.9	999.9	99.99	9999	999.9	999.9	99.99	9999.0
170.14	9999	999.9	999.9	99.99	9999	999.9	999.9	99.99	9999	999.9	999.9	99.99	9999.0
170.15	9999	999.9	999.9	99.99	9999	999.9	999.9	99.99	9999	999.9	999.9	99.99	9999.0
170.16	9999	999.9	999.9	99.99	9999	999.9	999.9	99.99	9999	999.9	999.9	99.99	9999.0
170.17	9999	999.9	999.9	99.99	9999	999.9	999.9	99.99	9999	999.9	999.9	99.99	9999.0
170.18	9999	999.9	999.9	99.99	9999	999.9	999.9	99.99	9999	999.9	999.9	99.99	9999.0
170.19	9999	999.9	999.9	99.99	9999	999.9	999.9	99.99	9999	999.9	999.9	99.99	9999.0
170.20	9999	999.9	999.9	99.99	9999	999.9	999.9	99.99	9999	999.9	999.9	99.99	9999.0
170.21	9999	999.9	999.9	99.99	9999	999.9	999.9	99.99	9999	999.9	999.9	99.99	9999.0
170.22	9999	999.9	999.9	99.99	9999	999.9	999.9	99.99	9999	999.9	999.9	99.99	9999.0
170.23	9999	999.9	999.9	99.99	9999	999.9	999.9	99.99	9999	999.9	999.9	99.99	9999.0

JULIAN DAY.HR	TEMPERATURES 3 M	10 M	30 M	DELTA TEMPS 10-3	30-3	30-10	STAB CLASS	DEW POINT	REL HUM	PRCP	RADIATION PARAMETERS SW SKY	SW REF	LW SKY	LW REF
170. 0	26.9	27.0	27.1	0.09	0.52	-0.03	E	999.9	9999	0.00	0	0	9999	452
170. 1	25.5	25.6	25.6	0.09	0.52	-0.04	E	999.9	9999	0.00	0	0	9999	444
170. 2	24.3	24.5	24.6	0.13	0.65	0.06	E	999.9	9999	0.00	0	0	9999	436
170. 3	23.5	23.7	23.8	0.14	0.62	0.02	E	999.9	9999	0.00	0	0	9999	432
170. 4	22.8	23.0	23.2	0.14	0.67	0.07	E	999.9	9999	0.00	0	0	9999	428
170. 5	21.5	-9.3	22.2	0.31	0.78	0.21	E	999.9	9999	0.00	0	0	9999	418
170. 6	999.9	999.9	999.9	99.99	99.99	99.99		999.9	9999	99.99	9999	9999	9999	9999
170. 7	999.9	999.9	999.9	99.99	99.99	99.99		999.9	9999	99.99	9999	9999	9999	9999
170. 8	999.9	999.9	999.9	99.99	99.99	99.99		999.9	9999	99.99	9999	9999	9999	9999
170. 9	999.9	999.9	999.9	99.99	99.99	99.99		999.9	9999	99.99	9999	9999	9999	9999
170.10	999.9	999.9	999.9	99.99	99.99	99.99		999.9	9999	99.99	9999	9999	9999	9999
170.11	999.9	999.9	999.9	99.99	99.99	99.99		999.9	9999	99.99	9999	9999	9999	9999
170.12	999.9	999.9	999.9	99.99	99.99	99.99		999.9	9999	99.99	9999	9999	9999	9999
170.13	999.9	999.9	999.9	99.99	99.99	99.99		999.9	9999	99.99	9999	9999	9999	9999
170.14	999.9	999.9	999.9	99.99	99.99	99.99		999.9	9999	99.99	9999	9999	9999	9999
170.15	999.9	999.9	999.9	99.99	99.99	99.99		999.9	9999	99.99	9999	9999	9999	9999
170.16	999.9	999.9	999.9	99.99	99.99	99.99		999.9	9999	99.99	9999	9999	9999	9999
170.17	999.9	999.9	999.9	99.99	99.99	99.99		999.9	9999	99.99	9999	9999	9999	9999
170.18	999.9	999.9	999.9	99.99	99.99	99.99		999.9	9999	99.99	9999	9999	9999	9999
170.19	999.9	999.9	999.9	99.99	99.99	99.99		999.9	9999	99.99	9999	9999	9999	9999
170.20	999.9	999.9	999.9	99.99	99.99	99.99		999.9	9999	99.99	9999	9999	9999	9999
170.21	999.9	999.9	999.9	99.99	99.99	99.99		999.9	9999	99.99	9999	9999	9999	9999
170.22	999.9	999.9	999.9	99.99	99.99	99.99		999.9	9999	99.99	9999	9999	9999	9999
170.23	999.9	999.9	999.9	99.99	99.99	99.99		999.9	9999	99.99	9999	9999	9999	9999

DAILY SUMMARIES

3 METER TEMP --- AVG = 24.1 MAX = 26.9 MIN = 21.5 AVG DEW POINT = 999.9 TOTAL PRCP = 0.00

10 METER WINDS -- AVG SPEED = 7.2 AVG DIR = 150 PEAK SPEED = 17.0 , OCCURRED DURING HOUR 1

NUMBER OF HOURS PER STABILITY CLASS A = 0 , B = 0, C = 0, D = 0, E = 6, F = 0, G = 0

WIPP METEOROLOGICAL DATA DAILY SUMMARY FOR 6/20/77

JULIAN DAY.HR	3 METER WIND DIR	3 METER WIND SPD	3 METER WIND PEAK SPD	3 METER WIND TURB INT	10 METER WIND DIR	10 METER WIND SPD	10 METER WIND PEAK SPD	10 METER WIND TURB INT	30 METER WIND DIR	30 METER WIND SPD	30 METER WIND PEAK SPD	30 METER WIND TURB INT	BAROM PRESS
171. 0	9999	999.9	999.9	99.99	9999	999.9	999.9	99.99	9999	999.9	999.9	99.99	9999.0
171. 1	9999	999.9	999.9	99.99	9999	999.9	999.9	99.99	9999	999.9	999.9	99.99	9999.0
171. 2	9999	999.9	999.9	99.99	9999	999.9	999.9	99.99	9999	999.9	999.9	99.99	9999.0
171. 3	9999	999.9	999.9	99.99	9999	999.9	999.9	99.99	9999	999.9	999.9	99.99	9999.0
171. 4	9999	999.9	999.9	99.99	9999	999.9	999.9	99.99	9999	999.9	999.9	99.99	9999.0
171. 5	9999	999.9	999.9	99.99	9999	999.9	999.9	99.99	9999	999.9	999.9	99.99	9999.0
171. 6	9999	999.9	999.9	99.99	9999	999.9	999.9	99.99	9999	999.9	999.9	99.99	9999.0
171. 7	9999	999.9	999.9	99.99	9999	999.9	999.9	99.99	9999	999.9	999.9	99.99	9999.0
171. 8	9999	999.9	999.9	99.99	9999	999.9	999.9	99.99	9999	999.9	999.9	99.99	9999.0
171. 9	9999	999.9	999.9	99.99	9999	999.9	999.9	99.99	9999	999.9	999.9	99.99	9999.0
171.10	9999	999.9	999.9	99.99	9999	999.9	999.9	99.99	9999	999.9	999.9	99.99	9999.0
171.11	9999	999.9	999.9	99.99	9999	999.9	999.9	99.99	9999	999.9	999.9	99.99	9999.0
171.12	9999	999.9	999.9	99.99	9999	999.9	999.9	99.99	9999	999.9	999.9	99.99	9999.0
171.13	9999	999.9	999.9	99.99	9999	999.9	999.9	99.99	9999	999.9	999.9	99.99	9999.0
171.14	130	3.5	9.0	99.99	360	3.4	10.0	99.99	135	6.0	10.5	99.99	890.6
171.15	162	3.0	9.5	99.99	144	4.6	10.5	99.99	140	3.3	11.0	99.99	889.8
171.16	146	2.5	14.5	99.99	126	2.3	10.0	99.99	135	4.0	10.0	99.99	889.0
171.17	340	9.0	16.0	99.99	330	11.0	10.5	99.99	335	14.0	19.8	99.99	889.4
171.18	131	2.5	6.0	99.99	84	4.0	17.5	99.99	67	3.3	17.0	99.99	890.0
171.19	142	5.5	8.5	99.99	126	6.0	15.5	99.99	137	10.0	14.5	99.99	889.6
171.20	137	3.5	5.0	99.99	138	7.0	13.0	99.99	142	9.0	13.5	99.99	890.6
171.21	61	2.5	5.0	99.99	54	4.1	10.0	99.99	83	5.3	10.5	99.99	892.2
171.22	45	2.5	4.0	99.99	30	3.4	7.0	99.99	56	3.0	7.0	99.99	892.5
171.23	153	1.5	4.5	99.99	54	3.9	5.5	99.99	72	3.5	4.5	99.99	893.2

JULIAN DAY.HR	TEMPERATURES 3 M	TEMPERATURES 10 M	TEMPERATURES 30 M	DELTA TEMPS 10-3	DELTA TEMPS 30-3	DELTA TEMPS 30-10	STAB CLASS	DEW POINT	REL HUM	PRCP	RADIATION PARAMETERS SW SKY	SW REF	LW SKY	LW REF
171. 0	999.9	999.9	999.9	99.99	99.99	99.99		999.9	9999	99.99	9999	9999	9999	9999
171. 1	999.9	999.9	999.9	99.99	99.99	99.99		999.9	9999	99.99	9999	9999	9999	9999
171. 2	999.9	999.9	999.9	99.99	99.99	99.99		999.9	9999	99.99	9999	9999	9999	9999
171. 3	999.9	999.9	999.9	99.99	99.99	99.99		999.9	9999	99.99	9999	9999	9999	9999
171. 4	999.9	999.9	999.9	99.99	99.99	99.99		999.9	9999	99.99	9999	9999	9999	9999
171. 5	999.9	999.9	999.9	99.99	99.99	99.99		999.9	9999	99.99	9999	9999	9999	9999
171. 6	999.9	999.9	999.9	99.99	99.99	99.99		999.9	9999	99.99	9999	9999	9999	9999
171. 7	999.9	999.9	999.9	99.99	99.99	99.99		999.9	9999	99.99	9999	9999	9999	9999
171. 8	999.9	999.9	999.9	99.99	99.99	99.99		999.9	9999	99.99	9999	9999	9999	9999
171. 9	999.9	999.9	999.9	99.99	99.99	99.99		999.9	9999	99.99	9999	9999	9999	9999
171.10	999.9	999.9	999.9	99.99	99.99	99.99		999.9	9999	99.99	9999	9999	9999	9999
171.11	999.9	999.9	999.9	99.99	99.99	99.99		999.9	9999	99.99	9999	9999	9999	9999
171.12	999.9	999.9	999.9	99.99	99.99	99.99		999.9	9999	99.99	9999	9999	9999	9999
171.13	999.9	999.9	999.9	99.99	99.99	99.99		999.9	9999	99.99	9999	9999	9999	9999
171.14	34.1	33.5	32.3	-0.60	-1.94	-1.27	A	999.9	9999	0.00	1068	229	9999	597
171.15	34.4	-30.0	33.2	-0.64	-2.48	-0.54	A	999.9	9999	0.00	941	549	9999	602
171.16	33.3	32.9	32.5	-0.38	-2.15	-0.47	A	999.9	9999	0.00	259	56	9999	536
171.17	25.6	25.3	24.9	-0.35	-2.08	-0.44	A	999.9	9999	0.00	9	0	9999	456
171.18	19.9	19.8	19.8	-0.09	-1.44	-0.06	E	999.9	9999	0.08	4	2	9999	423
171.19	19.1	19.1	19.2	0.05	-1.29	0.01	E	999.9	9999	0.02	10	0	9999	415
171.20	22.6	23.0	24.2	0.48	0.22	1.06	G	999.9	9999	0.00	10	3	9999	428
171.21	21.5	21.7	21.8	0.11	-1.12	0.07	E	999.9	9999	0.00	0	0	9999	425
171.22	20.4	20.4	20.4	0.03	-1.34	-0.09	E	999.9	9999	0.00	0	0	9999	422
171.23	19.5	19.7	20.3	0.21	-0.54	0.56	F	999.9	9999	0.00	0	0	9999	415

DAILY SUMMARIES

3 METER TEMP --- AVG = 25.0 MAX = 34.4 MIN = 19.1 AVG DEW POINT = 999.9 TOTAL PRCP = 0.10

10 METER WINDS -- AVG SPEED = 2.2 AVG DIR = 71 PEAK SPEED = 17.5 , OCCURRED DURING HOUR 18

NUMBER OF HOURS PER STABILITY CLASS A = 4 , B = 0, C = 0, D = 0, E = 4, F = 1, G = 1

WIPP METEOROLOGICAL DATA DAILY SUMMARY FOR 6/21/77

JULIAN DAY.HR	3 METER WIND DIR	SPD	PEAK SPD	TURB INT	10 METER WIND DIR	SPD	PEAK SPD	TURB INT	30 METER WIND DIR	SPD	PEAK SPD	TURB INT	BAROM PRESS
172. 0	94	2.5	5.0	99.99	78	3.4	4.5	99.99	91	6.0	7.0	99.99	893.2
172. 1	94	3.5	4.8	99.99	84	5.2	5.5	99.99	88	6.0	8.3	99.99	893.5
172. 2	77	2.0	5.0	99.99	66	3.1	6.5	99.99	77	4.5	8.0	99.99	893.5
172. 3	137	2.5	5.0	99.99	120	1.4	3.0	99.99	126	4.8	7.5	99.99	893.6
172. 4	151	4.0	6.5	99.99	138	1.5	5.5	99.99	131	6.0	8.5	99.99	893.2
172. 5	173	3.0	5.0	99.99	156	5.0	7.0	99.99	164	6.5	9.5	99.99	893.3
172. 6	178	1.5	2.0	99.99	186	1.9	7.5	99.99	186	3.3	7.5	99.99	893.9
172. 7	216	1.0	5.0	99.99	222	0.8	6.0	99.99	227	2.0	4.3	99.99	894.2
172. 8	200	3.5	5.5	99.99	204	3.3	3.0	99.99	189	4.0	5.5	99.99	894.4
172. 9	205	4.0	6.0	99.99	192	4.2	4.0	99.99	194	4.3	6.3	99.99	894.3
172.10	178	3.0	6.0	99.99	198	3.9	6.5	99.99	178	4.0	7.3	99.99	894.1
172.11	178	3.5	5.0	99.99	186	3.6	6.5	99.99	167	3.5	8.0	99.99	893.9
172.12	200	2.0	5.0	99.99	180	2.5	7.0	99.99	173	3.0	5.5	99.99	893.3
172.13	146	2.5	5.0	99.99	150	2.3	5.5	99.99	140	2.5	6.8	99.99	893.1
172.14	135	2.0	5.0	99.99	144	2.0	5.5	99.99	130	3.0	5.5	99.99	893.1
172.15	259	3.0	4.5	99.99	258	3.5	5.0	99.99	238	3.0	5.5	99.99	892.0
172.16	108	1.5	4.0	99.99	216	1.2	4.5	99.99	248	2.0	6.3	99.99	891.0
172.17	140	5.0	10.5	99.99	120	2.4	5.0	99.99	137	8.0	4.5	99.99	891.0
172.18	130	4.0	10.5	99.99	126	5.7	4.5	99.99	126	10.0	15.5	99.99	891.8
172.19	81	5.5	9.0	99.99	60	8.0	8.5	99.99	83	9.0	13.5	99.99	892.8
172.20	103	5.0	7.5	99.99	102	7.0	12.5	99.99	104	9.0	11.8	99.99	892.9
172.21	119	3.0	5.0	99.99	114	2.3	10.0	99.99	115	6.5	11.0	99.99	893.0
172.22	119	1.0	2.5	99.99	108	1.5	4.5	99.99	110	3.3	9.5	99.99	893.9
172.23	124	1.0	2.5	99.99	108	0.7	6.5	99.99	121	3.0	4.5	99.99	894.6

JULIAN DAY.HR	TEMPERATURES 3 M	10 M	30 M	DELTA TEMPS 10-3	30-3	30-10	STAB CLASS	DEW POINT	REL HUM	PRCP	RADIATION PARAMETERS SW SKY	SW REF	LW SKY	LW REF
172. 0	20.2	20.7	23.8	0.48	2.20	3.04	G	999.9	9999	0.00	0	0	9999	417
172. 1	20.4	20.5	20.8	0.06	-1.05	0.19	E	999.9	9999	0.00	0	0	9999	414
172. 2	19.6	19.8	20.2	0.18	-0.72	0.41	F	999.9	9999	0.00	0	0	9999	412
172. 3	19.1	19.4	19.6	0.22	-0.92	0.15	E	999.9	9999	0.00	0	0	9999	409
172. 4	20.0	20.2	20.5	0.26	-0.84	0.20	E	999.9	9999	0.00	0	0	9999	415
172. 5	19.3	19.4	19.6	0.15	-1.10	0.05	E	999.9	9999	0.00	0	0	9999	409
172. 6	18.3	18.6	19.0	0.28	-0.67	0.36	F	999.9	9999	0.00	13	3	9999	406
172. 7	19.4	19.3	19.2	-0.12	-1.55	-0.15	D	999.9	9999	0.0	90	17	9999	416
172. 8	20.8	20.7	20.5	-0.18	-1.78	-0.31	C	999.9	9999	0.00	243	47	9999	431
172. 9	23.0	22.6	22.3	-0.40	-2.10	-0.40	A	999.9	9999	0.00	548	109	9999	456
172.10	23.9	23.5	23.3	-0.37	-2.00	-0.34	B	999.9	9999	0.00	573	110	9999	463
172.11	25.3	24.9	24.5	-0.36	-0.71	-0.42	A	999.9	9999	0.00	668	130	9999	482
172.12	25.7	26.8	25.2	-0.28	-0.39	-0.22	D	999.9	9999	0.00	463	90	9999	487
172.13	28.1	27.7	27.5	-0.30	-0.58	-0.31	C	999.9	9999	0.00	385	74	9999	489
172.14	28.6	28.1	27.8	-0.43	-0.78	-0.40	A	999.9	9999	0.00	414	80	9999	500
172.15	29.8	29.2	28.9	-0.53	-0.90	-0.40	A	999.9	9999	0.00	938	186	9999	555
172.16	29.9	29.8	29.3	-0.19	-0.67	-0.53	A	999.9	9999	0.00	264	47	9999	504
172.17	29.7	29.4	29.2	-0.31	-0.51	-0.24	D	999.9	9999	0.00	137	26	9999	486
172.18	23.8	23.5	23.2	-0.26	-0.61	-0.39	A	999.9	9999	0.00	130	27	9999	451
172.19	20.9	20.8	20.6	-0.16	-0.38	-0.28	D	999.9	9999	0.00	16	4	9999	427
172.20	20.7	20.5	20.4	-0.19	-0.27	-0.13	D	999.9	9999	0.00	0	0	9999	420
172.21	19.7	19.6	19.6	-0.04	-0.02	-0.04	E	999.9	9999	0.00	0	0	9999	416
172.22	19.4	19.3	19.4	-0.20	-0.07	0.07	E	999.9	9999	0.00	0	0	9999	412
172.23	19.5	19.6	19.7	-0.02	0.16	0.10	E	999.9	9999	0.00	0	0	9999	417

DAILY SUMMARIES

3 METER TEMP -- AVG = 22.7 MAX = 29.9 MIN = 18.3 AVG DEW POINT = 999.9 TOTAL PRCP = 0.00

10 METER WINDS -- AVG SPEED = 1.9 AVG DIR = 134 PEAK SPEED = 12.5 , OCCURRED DURING HOUR 20

NUMBER OF HOURS PER STABILITY CLASS A = 6 , B = 1, C = 2, D = 5, E = 7, F = 2, G = 1

WIPP METEOROLOGICAL DATA DAILY SUMMARY FOR 6/22/77

JULIAN DAY.HR	3 METER WIND DIR	SPD	PEAK SPD	TURB INT	10 METER WIND DIR	SPD	PEAK SPD	TURB INT	30 METER WIND DIR	SPD	PEAK SPD	TURB INT	BAROM PRESS
173. 0	86	2.0	3.0	99.99	66	2.6	3.0	99.99	83	4.0	5.0	99.99	894.9
173. 1	92	2.0	2.3	99.99	90	2.6	2.5	99.99	88	3.0	5.5	99.99	894.6
173. 2	302	0.8	2.0	99.99	96	0.5	3.5	99.99	131	1.3	3.5	99.99	894.2
173. 3	140	0.5	2.0	99.99	144	1.6	5.0	99.99	148	2.0	3.2	99.99	893.6
173. 4	227	1.5	2.3	99.99	228	1.5	1.5	99.99	221	2.5	4.0	99.99	893.3
173. 5	140	0.5	2.0	99.99	144	0.4	3.0	99.99	135	2.5	3.0	99.99	893.1
173. 6	92	1.0	2.5	99.99	108	1.5	2.5	99.99	108	2.0	3.0	99.99	893.1
173. 7	146	1.5	3.5	99.99	138	2.0	2.5	99.99	119	3.5	4.3	99.99	893.5
173. 8	162	2.5	3.8	99.99	156	2.7	2.0	99.99	151	2.8	5.3	99.99	894.2
173. 9	146	2.5	4.8	99.99	138	2.6	4.5	99.99	138	3.0	4.5	99.99	894.2
173.10	146	3.5	6.5	99.99	144	4.1	4.0	99.99	140	5.0	5.5	99.99	894.6
173.11	178	4.5	7.5	99.99	180	5.6	6.5	99.99	173	7.0	8.5	99.99	895.1
173.12	173	4.5	6.0	99.99	168	5.7	7.0	99.99	167	6.0	9.0	99.99	895.0
173.13	173	4.5	6.5	99.99	180	4.9	7.5	99.99	173	6.0	8.3	99.99	894.9
173.14	157	4.0	7.3	99.99	144	4.9	7.0	99.99	159	4.5	7.8	99.99	894.3
173.15	194	3.0	5.8	99.99	180	4.3	7.5	99.99	178	3.5	8.3	99.99	893.6
173.16	140	2.5	7.0	99.99	162	4.4	7.0	99.99	140	4.0	8.0	99.99	892.7
173.17	140	3.0	5.5	99.99	144	3.0	5.5	99.99	127	4.8	8.5	99.99	892.5
173.18	135	3.0	5.5	99.99	144	4.5	8.0	99.99	130	5.0	7.5	99.99	892.3
173.19	119	1.5	8.0	99.99	126	1.6	6.5	99.99	108	2.5	7.0	99.99	892.5
173.20	18	4.0	7.0	99.99	18	6.0	6.5	99.99	23	6.0	9.8	99.99	893.6
173.21	104	4.5	7.5	99.99	90	6.3	9.5	99.99	104	9.5	11.0	99.99	893.8
173.22	94	2.0	10.0	99.99	72	2.9	7.5	99.99	88	3.8	10.5	99.99	894.2
173.23	275	7.0	11.5	99.99	282	9.2	9.0	99.99	275	12.0	13.5	99.99	896.4

JULIAN DAY.HR	TEMPERATURES 3 M	10 M	30 M	DELTA TEMPS 10-3	30-3	30-10	STAB CLASS	DEW POINT	REL HUM	PRCP	RADIATION PARAMETERS SW SKY	SW REF	LW SKY	LW REF
173. 0	19.8	19.9	20.1	0.10	0.37	0.20	E	999.9	9999	0.00	0	0	9999	415
173. 1	20.5	20.4	20.4	-0.04	-0.06	-0.10	D	999.9	9999	0.00	0	0	9999	422
173. 2	19.5	19.8	20.3	0.32	0.85	0.41	F	999.9	9999	0.00	0	0	9999	415
173. 3	19.2	19.6	19.8	0.46	0.66	0.15	E	999.9	9999	0.00	0	0	9999	413
173. 4	19.2	19.2	19.2	0.02	0.09	-0.04	E	999.9	9999	0.00	0	0	9999	414
173. 5	19.0	19.1	19.2	0.09	0.28	0.06	E	999.9	9999	0.00	0	0	9999	413
173. 6	18.9	19.0	19.0	0.04	0.12	-0.03	E	999.9	9999	0.00	0	0	9999	413
173. 7	19.3	19.3	19.2	-0.06	-0.13	-0.19	D	999.9	9999	0.00	31	7	9999	417
173. 8	19.8	19.7	19.5	-0.11	-0.22	-0.23	D	999.9	9999	0.00	62	13	9999	421
173. 9	20.0	19.9	19.8	-0.14	-0.21	-0.19	D	999.9	9999	0.00	112	22	9999	425
173.10	21.4	21.1	20.8	-0.30	-0.72	-0.37	B	999.9	9999	0.00	246	50	9999	438
173.11	21.4	21.1	20.7	-0.28	-0.63	-0.43	A	999.9	9999	0.00	236	48	9999	440
173.12	21.6	21.3	20.9	-0.30	-0.71	-0.49	A	999.9	9999	0.00	203	41	9999	442
173.13	23.2	22.8	22.4	-0.45	-0.83	-0.37	B	999.9	9999	0.00	479	100	9999	467
173.14	25.8	25.0	24.5	-0.74	-1.33	-0.55	A	999.9	9999	0.00	1028	212	9999	518
173.15	27.1	26.1	25.8	-0.93	-1.32	-0.36	B	999.9	9999	0.00	878	179	9999	532
173.16	28.0	27.3	26.9	-0.70	-1.29	-0.54	A	999.9	9999	0.00	727	153	9999	522
173.17	28.7	27.8	27.2	-0.92	-1.49	-0.54	A	999.9	9999	0.00	655	142	9999	519
173.18	27.8	27.2	26.8	-0.60	-1.10	-0.46	A	999.9	9999	0.00	356	78	9999	487
173.19	26.3	26.1	25.9	-0.24	-0.49	-0.24	D	999.9	9999	0.00	31	6	9999	461
173.20	22.3	22.2	22.1	-0.08	-0.31	-0.20	D	999.9	9999	0.00	0	0	9999	436
173.21	22.6	22.3	22.0	-0.32	-0.68	-0.33	C	999.9	9999	0.00	0	0	9999	435
173.22	22.2	22.0	22.1	-0.20	-0.06	0.14	E	999.9	9999	0.00	0	0	9999	432
173.23	17.6	17.6	17.6	0.06	-0.04	-0.09	E	999.9	9999	0.38	0	0	9999	398

DAILY SUMMARIES

3 METER TEMP --- AVG = 22.1 MAX = 28.7 MIN = 17.6 AVG DEW POINT = 999.9 TOTAL PRCP = 0.38

10 METER WINDS -- AVG SPEED = 1.9 AVG DIR = 145 PEAK SPEED = 9.5 , OCCURRED DURING HOUR 21

NUMBER OF HOURS PER STABILITY CLASS A = 6 , B = 3, C = 1, D = 6, E = 7, F = 1, G = 0

WIPP METEOROLOGICAL DATA DAILY SUMMARY FOR 6/23/77

JULIAN DAY.HR	3 METER WIND DIR	SPD	PEAK SPD	TURB INT	10 METER WIND DIR	SPD	PEAK SPD	TURB INT	30 METER WIND DIR	SPD	PEAK SPD	TURB INT	BAROM PRESS
174. 0	281	1.3	3.0	99.99	300	1.6	11.5	99.99	286	1.5	16.0	99.99	897.1
174. 1	45	2.0	4.8	99.99	342	1.2	13.5	99.99	18	3.3	4.5	99.99	896.4
174. 2	45	2.3	3.3	99.99	30	3.3	3.5	99.99	42	4.0	6.0	99.99	894.7
174. 3	194	0.5	3.5	99.99	234	0.7	5.0	99.99	203	0.5	4.0	99.99	894.2
174. 4	259	2.0	3.0	99.99	264	2.7	3.0	99.99	259	2.5	4.0	99.99	894.2
174. 5	45	1.3	3.5	99.99	336	1.2	3.5	99.99	346	2.0	3.0	99.99	894.7
174. 6	104	2.0	3.5	99.99	108	2.9	2.5	99.99	107	5.0	5.5	99.99	895.4
174. 7	135	2.5	6.0	99.99	120	2.3	3.0	99.99	137	5.0	6.3	99.99	895.8
174. 8	151	4.0	6.5	99.99	156	5.2	4.0	99.99	148	6.0	7.5	99.99	896.2
174. 9	157	3.0	6.5	99.99	156	4.4	6.0	99.99	154	4.5	8.0	99.99	896.5
174.10	146	4.0	7.0	99.99	168	4.6	8.0	99.99	157	5.0	6.5	99.99	896.0
174.11	178	3.0	5.5	99.99	150	5.0	6.5	99.99	189	4.0	7.5	99.99	896.5
174.12	167	2.5	7.5	99.99	204	3.1	7.0	99.99	194	3.5	7.0	99.99	896.5
174.13	162	2.5	5.5	99.99	150	3.0	5.5	99.99	167	3.0	7.0	99.99	896.4
174.14	135	1.5	4.5	99.99	138	2.8	9.0	99.99	113	2.5	6.3	99.99	895.6
174.15	243	0.5	6.3	99.99	180	2.8	6.5	99.99	243	2.0	5.5	99.99	894.6
174.16	308	1.0	4.5	99.99	180	1.6	5.0	99.99	248	2.0	6.0	99.99	894.3
174.17	324	1.0	3.5	99.99	120	2.0	4.5	99.99	292	1.0	5.3	99.99	894.2
174.18	130	0.8	3.0	99.99	138	2.2	4.0	99.99	119	1.5	4.5	99.99	893.8
174.19	81	1.0	2.0	99.99	84	1.8	4.0	99.99	108	2.0	3.8	99.99	893.6
174.20	324	1.5	4.5	99.99	66	0.7	3.5	99.99	319	3.8	4.0	99.99	893.6
174.21	45	3.0	6.0	99.99	30	4.2	2.5	99.99	50	5.5	7.0	99.99	893.7
174.22	110	3.0	7.0	99.99	114	3.1	5.5	99.99	121	5.8	9.0	99.99	895.0
174.23	121	3.0	12.0	99.99	120	3.2	4.0	99.99	115	6.0	10.5	99.99	895.8

JULIAN DAY.HR	TEMPERATURES 3 M	10 M	30 M	DELTA TEMPS 10-3	30-3	30-10	STAB CLASS	DEW POINT	REL HUM	PRCP	RADIATION PARAMETERS SW SKY	SW REF	LW SKY	LW REF
174. 0	16.1	15.9	15.8	-0.14	-0.37	-0.22	D	999.9	9999	0.66	0	0	9999	399
174. 1	16.7	16.7	16.8	-0.08	0.02	0.12	E	999.9	9999	0.43	0	0	9999	402
174. 2	16.9	17.0	17.3	0.07	0.32	0.27	E	999.9	9999	0.10	0	0	9999	401
174. 3	17.2	999.9	17.4	0.01	0.10	0.11	E	999.9	9999	0.00	0	0	9999	404
174. 4	16.5	16.4	16.2	-0.12	-0.30	-0.16	D	999.9	9999	0.00	0	0	9999	398
174. 5	15.9	16.2	16.5	0.37	0.44	0.18	E	999.9	9999	0.00	0	0	9999	394
174. 6	16.3	16.1	16.1	-0.26	-0.27	0.03	E	999.9	9999	0.00	7	0	9999	395
174. 7	17.3	17.2	17.0	-0.11	-0.30	-0.17	D	999.9	9999	0.00	188	32	9999	408
174. 8	19.6	19.4	19.2	-0.15	-0.50	-0.26	D	999.9	9999	0.00	383	72	9999	420
174. 9	21.3	21.0	20.7	-0.36	-0.70	-0.30	C	999.9	9999	0.00	600	116	9999	442
174.10	23.0	22.3	21.9	-0.70	-1.22	-0.51	A	999.9	9999	0.00	717	135	9999	462
174.11	24.4	24.4	23.7	-0.10	-0.86	-0.73	A	999.9	9999	0.00	914	171	9999	483
174.12	24.2	24.1	24.3	-0.08	0.03	0.11	E	999.9	9999	0.00	1013	192	9999	504
174.13	26.1	25.6	25.3	-0.47	-0.90	-0.41	A	999.9	9999	0.00	1029	197	9999	520
174.14	27.2	26.9	26.2	-0.33	-1.11	-0.78	A	999.9	9999	0.00	984	192	9999	524
174.15	28.1	27.4	27.2	-0.64	-0.95	-0.28	D	999.9	9999	0.00	887	176	9999	533
174.16	28.1	27.8	28.0	-0.39	-0.23	0.12	E	999.9	9999	0.00	742	152	9999	531
174.17	28.5	28.1	27.9	-0.37	-0.64	-0.24	D	999.9	9999	0.00	616	128	9999	524
174.18	28.9	28.6	28.3	-0.35	-0.65	-0.32	C	999.9	9999	0.00	343	73	9999	491
174.19	27.2	27.4	27.6	0.26	0.40	0.18	E	999.9	9999	0.00	29	0	9999	455
174.20	24.3	25.8	26.7	1.58	2.40	0.82	G	999.9	9999	0.00	0	0	9999	439
174.21	23.0	23.5	24.7	0.40	1.63	1.23	G	999.9	9999	0.00	0	0	9999	432
174.22	23.4	23.4	23.3	-0.15	-0.27	-0.14	D	999.9	9999	0.00	0	0	9999	439
174.23	21.6	21.5	21.4	-0.08	-0.30	-0.21	D	999.9	9999	0.00	0	0	9999	429

DAILY SUMMARIES

3 METER TEMP --- AVG = 22.2 MAX = 28.9 MIN = 15.9 AVG DEW POINT = 999.9 TOTAL PRCP = 1.19

10 METER WINDS -- AVG SPEED = 1.5 AVG DIR = 139 PEAK SPEED = 13.5 , OCCURRED DURING HOUR 1

NUMBER OF HOURS PER STABILITY CLASS A = 4 , B = 0, C = 2, D = 8, E = 8, F = 0, G = 2

WIPP METEOROLOGICAL DATA DAILY SUMMARY FOR 6/24/77

JULIAN DAY.HR	3 METER WIND DIR	SPD	PEAK SPD	TURB INT	10 METER WIND DIR	SPD	PEAK SPD	TURB INT	30 METER WIND DIR	SPD	PEAK SPD	TURB INT	BAROM PRESS
175. 0	135	5.0	9.0	99.99	144	7.5	7.0	99.99	131	6.0	16.8	99.99	895.6
175. 1	97	3.5	7.0	99.99	120	5.0	11.5	99.99	115	6.0	14.5	99.99	895.8
175. 2	140	2.5	3.5	99.99	144	4.5	9.0	99.99	137	6.5	9.5	99.99	895.3
175. 3	324	1.0	2.0	99.99	330	2.3	5.0	99.99	292	2.5	7.0	99.99	895.3
175. 4	308	0.8	2.5	99.99	318	1.6	3.5	99.99	302	2.5	3.3	99.99	895.2
175. 5	140	1.5	3.0	99.99	168	2.7	2.5	99.99	162	3.8	4.0	99.99	895.5
175. 6	124	0.5	2.5	99.99	168	2.0	2.5	99.99	162	2.5	5.5	99.99	896.0
175. 7	130	0.8	3.5	99.99	114	1.7	2.5	99.99	124	2.0	4.9	99.99	896.8
175. 8	157	1.5	3.5	99.99	162	1.9	2.5	99.99	162	2.0	4.0	99.99	897.1
175. 9	124	1.5	4.0	99.99	138	2.0	2.5	99.99	157	2.0	3.8	99.99	897.3
175.10	151	2.5	4.5	99.99	174	2.4	3.5	99.99	162	3.0	4.3	99.99	897.3
175.11	135	3.0	6.0	99.99	144	1.9	4.0	99.99	151	3.5	5.3	99.99	897.3
175.12	146	3.0	5.5	99.99	120	3.0	5.0	99.99	130	3.5	6.0	99.99	897.5
175.13	119	3.0	7.5	99.99	138	3.4	6.0	99.99	162	4.0	7.0	99.99	896.8
175.14	140	3.5	6.0	99.99	138	4.4	7.5	99.99	140	4.8	6.8	99.99	896.0
175.15	130	4.0	6.5	99.99	132	4.8	6.5	99.99	135	5.5	8.3	99.99	895.2
175.16	140	5.0	8.0	99.99	144	6.0	8.5	99.99	135	7.0	9.5	99.99	894.2
175.17	162	5.0	8.5	99.99	150	5.1	8.5	99.99	162	6.5	10.0	99.99	894.2
175.18	167	3.0	8.0	99.99	180	3.6	9.0	99.99	173	3.5	16.5	99.99	894.6
175.19	178	1.5	5.5	99.99	198	2.2	16.0	99.99	211	2.0	6.5	99.99	894.7
175.20	124	0.5	2.5	99.99	138	0.4	6.5	99.99	130	1.0	3.0	99.99	895.1
175.21	18	2.5	3.5	99.99	54	3.6	3.0	99.99	76	6.5	6.0	99.99	895.8
175.22	61	2.5	6.0	99.99	78	3.4	3.0	99.99	84	4.5	8.0	99.99	896.8
175.23	18	2.0	3.0	99.99	36	2.9	7.5	99.99	59	5.0	6.3	99.99	896.9

JULIAN DAY.HR	TEMPERATURES 3 M	10 M	30 M	DELTA TEMPS 10-3	30-3	30-10	STAB CLASS	DEW POINT	REL HUM	PRCP	RADIATION PARAMETERS SW SKY	SW REF	LW SKY	LW REF
175. 0	17.9	18.6	19.4	0.60	1.39	0.78	F	999.9	9999	0.05	0	0	9999	407
175. 1	21.4	21.6	21.8	0.21	0.29	0.08	E	999.9	9999	0.00	0	0	9999	419
175. 2	19.2	19.6	20.1	0.38	0.84	0.46	F	999.9	9999	0.00	0	0	9999	407
175. 3	16.8	18.4	18.8	1.50	1.90	0.38	F	999.9	9999	0.00	0	0	9999	397
175. 4	15.7	17.9	18.3	2.14	2.50	0.35	F	999.9	9999	0.00	0	0	9999	391
175. 5	15.5	16.1	17.1	0.59	1.53	0.90	G	999.9	9999	0.00	0	0	9999	391
175. 6	15.8	16.0	16.5	0.25	0.70	0.43	F	999.9	9999	0.00	12	3	9999	395
175. 7	18.2	18.1	18.0	-0.15	-0.28	-0.15	D	999.9	9999	0.00	163	38	9999	418
175. 8	19.9	19.8	19.6	-0.22	-0.42	-0.28	D	999.9	9999	0.00	371	80	9999	428
175. 9	21.5	21.2	21.0	-0.28	-0.63	-0.35	B	999.9	9999	0.00	573	121	9999	449
175.10	23.5	22.9	22.4	-0.70	-1.20	-0.52	A	999.9	9999	0.00	760	156	9999	478
175.11	24.2	23.7	23.4	-0.46	-0.88	-0.45	A	999.9	9999	0.00	877	178	9999	499
175.12	25.2	24.4	24.4	-0.79	-0.80	-0.06	E	999.9	9999	0.00	999	200	9999	532
175.13	27.0	26.8	26.2	-0.78	-1.39	-0.65	A	999.9	9999	0.00	915	177	9999	540
175.14	28.3	27.7	27.1	-0.59	-1.17	-0.62	A	999.9	9999	0.00	1155	237	9999	542
175.15	27.9	27.3	26.8	-0.60	-1.07	-0.52	A	999.9	9999	0.00	315	63	9999	495
175.16	30.0	29.0	28.7	-0.89	-1.24	-0.43	A	999.9	9999	0.00	789	168	9999	533
175.17	28.9	28.7	28.4	-0.20	-0.49	-0.34	B	999.9	9999	0.00	173	36	9999	482
175.18	25.3	25.1	24.8	-0.23	-0.45	-0.30	C	999.9	9999	0.00	161	35	9999	467
175.19	25.3	25.0	24.8	-0.33	-0.45	-0.27	D	999.9	9999	0.00	70	11	9999	449
175.20	22.8	23.8	24.1	1.01	1.39	0.28	E	999.9	9999	0.00	0	0	9999	426
175.21	21.2	21.3	21.5	0.09	0.32	0.16	E	999.9	9999	0.00	0	0	9999	423
175.22	19.6	19.6	19.9	-0.09	0.20	0.23	E	999.9	9999	0.00	0	0	9999	415
175.23	19.2	19.5	20.3	0.22	1.04	0.78	F	999.9	9999	0.00	0	0	9999	411

DAILY SUMMARIES

3 METER TEMP --- AVG = 22.1 MAX = 30.0 MIN = 15.5 AVG DEW POINT = 999.9 TOTAL PRCP = 0.05

10 METER WINDS -- AVG SPEED = 2.4 AVG DIR = 137 PEAK SPEED = 16.0 , OCCURRED DURING HOUR 19

NUMBER OF HOURS PER STABILITY CLASS A = 6 , B = 2, C = 1, D = 3, E = 5, F = 6, G = 1

WIPP METEOROLOGICAL DATA DAILY SUMMARY FOR 6/25/77

JULIAN DAY.HR	3 METER WIND DIR	SPD	PEAK SPD	TURB INT	10 METER WIND DIR	SPD	PEAK SPD	TURB INT	30 METER WIND DIR	SPD	PEAK SPD	TURB INT	BAROM PRESS
176. 0	56	3.5	4.5	99.99	66	4.5	4.0	99.99	36	6.0	7.8	99.99	896.9
176. 1	34	1.5	4.0	99.99	60	2.2	3.5	99.99	86	4.0	6.3	99.99	896.9
176. 2	2	1.5	2.5	99.99	30	2.0	4.0	99.99	81	2.8	5.0	99.99	896.6
176. 3	67	1.5	2.0	99.99	90	3.1	3.5	99.99	108	5.5	6.3	99.99	896.0
176. 4	67	2.0	3.0	99.99	84	2.8	2.5	99.99	97	4.0	6.0	99.99	895.8
176. 5	184	1.0	2.5	99.99	234	1.5	4.0	99.99	130	1.5	4.5	99.99	895.8
176. 6	351	0.5	1.5	99.99	354	0.9	3.5	99.99	13	0.3	2.5	99.99	896.2
176. 7	18	1.0	1.5	99.99	48	1.6	2.5	99.99	77	1.0	2.3	99.99	896.6
176. 8	346	2.0	3.0	99.99	12	2.7	2.0	99.99	34	2.5	999.9	99.99	897.2
176. 9	346	2.0	3.0	99.99	24	1.6	3.5	99.99	29	1.8	4.3	99.99	897.5
176.10	18	1.5	3.5	99.99	24	1.6	3.5	99.99	61	2.0	3.5	99.99	897.5
176.11	56	1.5	4.5	99.99	324	1.2	3.5	99.99	104	1.5	5.5	99.99	897.2
176.12	335	2.5	4.5	99.99	216	2.2	6.0	99.99	7	2.0	4.0	99.99	896.4
176.13	50	2.0	4.5	99.99	114	1.8	5.5	99.99	70	2.0	5.5	99.99	896.0
176.14	200	1.5	3.5	99.99	216	2.3	5.5	99.99	227	1.3	4.5	99.99	895.5
176.15	18	2.5	5.5	99.99	36	3.4	4.0	99.99	50	2.5	6.0	99.99	894.7
176.16	281	3.5	6.0	99.99	312	4.6	5.5	99.99	308	5.0	7.0	99.99	894.2
176.17	238	2.5	4.0	99.99	330	2.9	4.5	99.99	297	2.0	5.3	99.99	893.4
176.18	335	1.0	4.0	99.99	18	1.7	4.0	99.99	29	1.5	4.5	99.99	892.8
176.19	308	0.5	2.0	99.99	324	0.8	4.5	99.99	356	1.5	2.8	99.99	892.8
176.20	7	1.0	2.0	99.99	36	2.3	3.0	99.99	34	2.0	3.3	99.99	893.2
176.21	45	1.5	2.0	99.99	72	2.9	3.0	99.99	88	2.8	2.8	99.99	893.3
176.22	72	1.0	2.0	99.99	108	1.4	3.0	99.99	126	4.5	5.5	99.99	893.8
176.23	126	1.0	1.5	99.99	120	0.6	4.5	99.99	142	5.5	5.8	99.99	893.9

JULIAN DAY.HR	TEMPERATURES 3 M	10 M	30 M	DELTA TEMPS 10-3	30-3	30-10	STAB CLASS	DEW POINT	REL HUM	PRCP	RADIATION PARAMETERS SW SKY	SW REF	LW SKY	LW REF
176. 0	19.0	19.0	19.1	-0.03	0.07	0.03	E	999.9	9999	0.00	0	0	9999	409
176. 1	19.5	19.8	22.3	0.24	2.80	2.49	G	999.9	9999	0.00	0	0	9999	414
176. 2	20.0	20.2	22.8	0.22	2.81	2.54	G	999.9	9999	0.00	0	0	9999	416
176. 3	20.5	20.9	22.7	0.34	2.16	1.75	G	999.9	9999	0.00	0	0	9999	419
176. 4	19.9	19.9	20.1	-0.05	0.22	0.19	E	999.9	9999	0.00	0	0	9999	414
176. 5	18.5	19.1	19.3	0.58	0.81	0.16	E	999.9	9999	0.00	0	0	9999	407
176. 6	17.0	19.1	19.1	2.02	2.08	-0.05	E	999.9	9999	0.00	7	3	9999	407
176. 7	19.0	19.0	19.4	-0.06	0.43	0.37	F	999.9	9999	0.00	71	15	9999	416
176. 8	20.2	20.1	20.0	-0.11	-0.28	-0.23	D	999.9	9999	0.00	132	29	9999	428
176. 9	21.3	21.2	21.0	-0.13	-0.28	-0.23	D	999.9	9999	0.00	607	137	9999	476
176.10	23.5	23.3	22.8	-0.28	-0.73	-0.53	A	999.9	9999	0.00	398	79	9999	477
176.11	24.9	24.4	23.8	-0.55	-1.10	-0.64	A	999.9	9999	0.00	327	59	9999	477
176.12	25.9	25.6	25.2	-0.24	-0.64	-0.50	A	999.9	9999	0.00	993	203	9999	543
176.13	26.6	26.4	26.2	-0.22	-0.40	-0.25	D	999.9	9999	0.00	390	76	9999	497
176.14	30.1	29.3	28.8	-0.76	-1.23	-0.54	A	999.9	9999	0.00	1098	228	9999	580
176.15	29.0	28.5	28.2	-0.55	-0.83	-0.37	B	999.9	9999	0.00	190	36	9999	506
176.16	29.2	28.6	28.2	-0.66	-1.03	-0.46	A	999.9	9999	0.00	920	202	9999	536
176.17	29.9	29.3	29.1	-0.64	-0.82	-0.26	D	999.9	9999	0.00	523	115	9999	518
176.18	29.4	29.4	29.3	-0.01	-0.09	-0.16	D	999.9	9999	0.00	38	0	9999	469
176.19	28.7	28.8	28.8	0.12	0.18	-0.01	E	999.9	9999	0.00	80	19	9999	474
176.20	26.7	27.9	28.7	1.19	2.02	0.74	F	999.9	9999	0.00	0	0	9999	438
176.21	25.0	27.1	28.1	2.11	3.21	1.02	G	999.9	9999	0.00	0	0	9999	434
176.22	23.5	24.5	27.2	1.02	3.79	2.65	G	999.9	9999	0.00	0	0	9999	432
176.23	22.7	23.6	25.9	0.98	3.20	2.15	G	999.9	9999	0.00	0	0	9999	430

DAILY SUMMARIES

3 METER TEMP --- AVG = 23.7 MAX = 30.1 MIN = 17.0 AVG DEW POINT = 999.9 TOTAL PRCP = 0.00

10 METER WINDS -- AVG SPEED = 1.1 AVG DIR = 38 PEAK SPEED = 6.0 , OCCURRED DURING HOUR 12

NUMBER OF HOURS PER STABILITY CLASS A = 5 , B = 1, C = 0, D = 5, E = 5, F = 2, G = 6

WIPP METEOROLOGICAL DATA DAILY SUMMARY FOR 6/26/77

JULIAN DAY.HR	3 METER WIND DIR	SPD	PEAK SPD	TURB INT	10 METER WIND DIR	SPD	PEAK SPD	TURB INT	30 METER WIND DIR	SPD	PEAK SPD	TURB INT	BAROM PRESS
177. 0	67	1.0	1.5	99.99	114	1.6	3.5	99.99	142	3.5	5.5	99.99	893.8
177. 1	83	1.5	3.5	99.99	126	0.8	3.5	99.99	213	0.3	4.5	99.99	893.8
177. 2	88	2.5	3.5	99.99	114	3.1	4.5	99.99	119	5.5	6.3	99.99	893.8
177. 3	94	2.0	5.5	99.99	114	2.0	5.0	99.99	119	6.0	8.0	99.99	893.2
177. 4	153	4.0	6.5	99.99	144	4.9	4.0	99.99	146	6.0	8.5	99.99	893.2
177. 5	140	3.5	5.0	99.99	138	4.4	7.0	99.99	130	6.0	7.5	99.99	893.5
177. 6	151	2.5	5.0	99.99	144	3.4	7.0	99.99	151	5.0	7.0	99.99	893.5
177. 7	140	3.0	4.0	99.99	144	2.7	4.5	99.99	140	3.5	5.8	99.99	893.6
177. 8	151	3.0	4.5	99.99	150	3.8	4.5	99.99	162	3.5	5.0	99.99	893.9
177. 9	194	2.0	4.0	99.99	204	2.3	5.0	99.99	189	2.0	4.5	99.99	894.2
177.10	184	2.0	4.5	99.99	198	1.6	5.0	99.99	194	3.0	4.8	99.99	894.2
177.11	211	2.0	4.0	99.99	228	2.4	5.0	99.99	281	1.0	999.9	99.99	894.2
177.12	113	1.0	4.0	99.99	270	0.7	4.0	99.99	346	1.0	4.5	99.99	893.6
177.13	167	2.5	4.5	99.99	216	2.1	4.5	99.99	216	1.0	4.5	99.99	893.0
177.14	162	3.0	5.5	99.99	180	2.7	5.0	99.99	167	3.0	5.0	99.99	892.3
177.15	146	4.0	6.5	99.99	150	3.7	5.0	99.99	200	4.5	7.3	99.99	892.0
177.16	167	3.5	5.0	99.99	180	3.2	6.5	99.99	181	5.0	5.5	99.99	891.1
177.17	151	3.0	5.5	99.99	180	2.6	4.5	99.99	178	3.0	6.5	99.99	890.9
177.18	157	2.5	5.5	99.99	156	3.5	5.5	99.99	173	3.5	6.3	99.99	890.5
177.19	130	1.5	4.5	99.99	138	1.8	6.0	99.99	135	4.0	4.5	99.99	890.6
177.20	119	1.5	2.0	99.99	126	0.5	4.5	99.99	130	4.8	4.8	99.99	890.5
177.21	124	1.5	2.0	99.99	120	1.4	2.0	99.99	124	7.0	7.5	99.99	891.0
177.22	135	3.5	7.5	99.99	126	3.7	2.5	99.99	135	9.0	11.5	99.99	891.6
177.23	146	5.0	8.0	99.99	144	7.0	8.0	99.99	56	6.0	11.0	99.99	891.7

JULIAN DAY.HR	TEMPERATURES 3 M	10 M	30 M	DELTA TEMPS 10-3	30-3	30-10	STAB CLASS	DEW POINT	REL HUM	PRCP	RADIATION PARAMETERS SW SKY	SW REF	LW SKY	LW REF
177. 0	22.4	23.0	26.2	0.54	3.81	3.20	G	999.9	9999	0.00	0	0	9999	426
177. 1	21.6	24.6	25.3	2.99	3.71	0.64	F	999.9	9999	0.00	0	0	9999	423
177. 2	22.2	22.5	24.0	0.28	1.80	1.44	G	999.9	9999	0.00	0	0	9999	428
177. 3	21.0	21.1	21.4	0.10	0.43	0.25	E	999.9	9999	0.00	0	0	9999	420
177. 4	21.3	21.3	21.4	0.08	0.14	-0.02	E	999.9	9999	0.00	0	0	9999	424
177. 5	20.2	20.3	20.4	0.08	0.22	0.02	E	999.9	9999	0.00	0	0	9999	417
177. 6	19.7	19.9	20.3	0.20	0.62	0.34	F	999.9	9999	0.00	11	3	9999	415
177. 7	21.4	21.2	21.0	-0.20	-0.32	-0.22	D	999.9	9999	0.00	158	38	9999	435
177. 8	23.6	23.2	22.9	-0.36	-0.71	-0.43	A	999.9	9999	0.00	366	83	9999	451
177. 9	25.4	25.0	24.7	-0.34	-0.60	-0.30	C	999.9	9999	0.00	563	125	9999	478
177.10	27.2	26.9	26.6	-0.33	-0.59	-0.35	B	999.9	9999	0.00	749	161	9999	517
177.11	29.1	29.2	28.6	0.12	-0.49	-0.70	A	999.9	9999	0.00	887	186	9999	282
177.12	31.1	30.7	30.5	-0.35	-0.53	-0.28	D	999.9	9999	0.00	950	201	9999	569
177.13	32.7	32.3	31.8	-0.37	-0.78	-0.50	A	999.9	9999	0.00	995	205	9999	597
177.14	33.8	33.9	33.4	0.09	-0.37	-0.57	A	999.9	9999	0.00	975	201	9999	589
177.15	35.2	34.3	33.6	-0.97	-1.54	-0.68	A	999.9	9999	0.00	894	189	9999	582
177.16	35.6	34.8	34.2	-0.76	-1.30	-0.64	A	999.9	9999	0.00	732	158	9999	565
177.17	34.1	34.0	33.8	-0.17	-0.34	-0.27	D	999.9	9999	0.00	381	83	9999	528
177.18	33.7	33.6	33.4	-0.10	-0.22	-0.23	D	999.9	9999	0.00	193	42	9999	506
177.19	31.5	32.0	32.6	0.46	1.16	0.60	F	999.9	9999	0.00	82	16	9999	484
177.20	28.7	29.8	32.2	1.10	3.53	2.34	G	999.9	9999	0.00	4	0	9999	462
177.21	27.8	28.5	31.7	0.73	3.86	3.04	G	999.9	9999	0.00	0	0	9999	458
177.22	26.8	27.0	27.1	0.11	0.24	0.02	E	999.9	9999	0.00	0	0	9999	454
177.23	27.0	27.2	27.3	0.18	0.36	0.08	E	999.9	9999	0.00	0	0	9999	454

DAILY SUMMARIES

3 METER TEMP --- AVG = 27.2 MAX = 35.6 MIN = 19.7 AVG DEW POINT = 999.9 TOTAL PRCP = 0.00

10 METER WINDS -- AVG SPEED = 2.4 AVG DIR = 153 PEAK SPEED = 8.0 , OCCURRED DURING HOUR 23

NUMBER OF HOURS PER STABILITY CLASS A = 6 , B = 1, C = 1, D = 4, E = 5, F = 3, G = 4

WIPP METEOROLOGICAL DATA DAILY SUMMARY FOR 6/27/77

JULIAN DAY.HR	3 METER WIND DIR	SPD	PEAK SPD	TURB INT	10 METER WIND DIR	SPD	PEAK SPD	TURB INT	30 METER WIND DIR	SPD	PEAK SPD	TURB INT	BAROM PRESS
178. 0	151	4.0	7.0	99.99	144	5.4	9.0	99.99	151	6.5	11.0	99.99	891.6
178. 1	140	1.5	5.0	99.99	138	2.6	9.0	99.99	140	5.0	7.8	99.99	891.3
178. 2	329	1.5	4.0	99.99	348	2.5	7.0	99.99	332	3.5	6.5	99.99	891.4
178. 3	61	1.5	4.0	99.99	96	3.5	4.0	99.99	110	5.3	6.5	99.99	891.0
178. 4	56	1.5	2.5	99.99	114	1.8	5.5	99.99	137	4.0	6.3	99.99	890.8
178. 5	67	1.5	3.5	99.99	108	1.9	4.0	99.99	115	4.5	6.3	99.99	891.0
178. 6	88	1.5	3.5	99.99	114	1.4	5.0	99.99	121	5.0	6.5	99.99	891.3
178. 7	83	1.0	2.5	99.99	114	1.2	4.5	99.99	126	3.3	7.3	99.99	891.7
178. 8	151	1.0	2.0	99.99	138	0.7	4.0	99.99	142	1.0	4.0	99.99	892.2
178. 9	178	1.0	1.5	99.99	198	0.6	2.5	99.99	205	0.5	2.3	99.99	892.[illegible]
178.10	270	1.5	2.0	99.99	300	1.4	2.0	99.99	302	2.0	3.0	99.99	892.8
178.11	324	2.0	3.5	99.99	306	2.1	3.0	99.99	340	2.8	4.3	99.99	892.8
178.12	254	2.0	4.0	99.99	270	2.1	4.0	99.99	270	3.0	4.5	99.99	892.3
178.13	259	2.0	5.5	99.99	276	2.3	4.5	99.99	281	3.0	7.5	99.99	892.0
178.14	335	2.0	3.5	99.99	18	2.3	6.5	99.99	7	1.5	4.5	99.99	891.4
178.15	140	2.0	6.0	99.99	240	2.0	5.0	99.99	243	2.5	6.0	99.99	890.5
178.16	340	1.0	4.0	99.99	18	1.3	6.5	99.99	23	1.0	4.5	99.99	890.3
178.17	140	2.0	3.0	99.99	138	2.4	4.5	99.99	142	2.0	3.5	99.99	889.6
178.18	140	2.0	3.0	99.99	156	2.5	3.5	99.99	146	2.0	3.5	99.99	889.1
178.19	135	1.5	2.5	99.99	144	2.2	3.5	99.99	130	4.0	4.5	99.99	889.1
178.20	146	4.5	8.5	99.99	144	5.8	3.5	99.99	140	8.0	11.5	99.99	889.8
178.21	140	3.0	6.5	99.99	150	5.0	10.5	99.99	146	6.3	9.5	99.99	890.1
178.22	146	4.5	6.0	99.99	156	5.1	9.0	99.99	151	7.5	8.0	99.99	890.6
178.23	135	3.0	7.0	99.99	144	4.5	7.5	99.99	146	6.3	10.5	99.99	891.3

JULIAN DAY.HR	TEMPERATURES 3 M	10 M	30 M	DELTA TEMPS 10-3	30-3	30-10	STAB CLASS	DEW POINT	REL HUM	PRCP	RADIATION PARAMETERS SW SKY	SW REF	LW SKY	LW REF
178. 0	26.2	26.4	26.6	0.19	0.46	0.16	E	999.9	9999	0.00	0	0	444	448
178. 1	24.8	25.1	25.5	0.32	0.74	0.35	F	999.9	9999	0.00	0	0	451	441
178. 2	23.0	24.7	25.3	1.61	2.29	0.59	F	999.9	9999	0.00	0	0	436	430
178. 3	22.4	23.0	25.3	0.57	3.00	2.35	G	999.9	9999	0.00	0	0	9999	426
178. 4	22.3	23.0	25.3	0.74	3.12	2.28	G	999.9	9999	0.00	0	0	9999	424
178. 5	22.1	22.3	22.7	0.20	0.71	0.41	F	999.9	9999	0.00	0	0	434	425
178. 6	21.8	21.9	22.2	0.10	0.46	0.28	E	999.9	9999	0.00	7	2	456	429
178. 7	21.9	22.0	22.3	0.06	0.44	0.26	E	999.9	9999	0.00	36	8	461	432
178. 8	23.4	23.3	23.2	-0.09	-0.18	-0.16	D	999.9	9999	0.00	179	40	464	455
178. 9	25.4	25.1	24.9	-0.28	-0.47	-0.26	D	999.9	9999	0.00	284	60	453	468
178.10	28.3	28.1	27.6	-0.12	-0.54	-0.53	A	999.9	9999	0.00	747	160	474	515
178.11	30.3	29.9	29.5	-0.48	-0.79	-0.44	A	999.9	9999	0.00	894	188	485	556
178.12	33.4	32.8	32.7	-0.57	-0.61	-0.15	D	999.9	9999	0.00	1056	221	502	594
178.13	33.7	33.5	33.1	-0.24	-0.60	-0.46	A	999.9	9999	0.00	741	153	492	571
178.14	34.8	34.6	34.1	-0.16	-0.62	-0.62	A	999.9	9999	0.00	894	189	513	619
178.15	35.7	35.5	35.2	-0.25	-0.46	-0.32	C	999.9	9999	0.00	757	162	504	596
178.16	34.6	34.5	34.4	-0.07	-0.07	-0.16	D	999.9	9999	0.00	382	81	485	538
178.17	35.2	35.1	34.9	-0.18	-0.16	-0.21	D	999.9	9999	0.00	302	62	475	516
178.18	35.9	35.6	35.4	-0.30	-0.24	-0.24	D	999.9	9999	0.00	345	77	479	524
178.19	32.7	34.1	34.8	1.38	2.40	0.64	F	999.9	9999	0.00	64	9	467	480
178.20	28.7	28.8	28.9	0.11	0.56	0.03	E	999.9	9999	0.00	0	0	449	462
178.21	27.2	27.4	27.6	0.22	0.86	0.19	E	999.9	9999	0.00	0	0	444	453
178.22	27.6	27.9	28.4	0.30	1.21	0.43	F	999.9	9999	0.00	0	0	449	456
178.23	26.9	27.0	27.2	0.15	0.82	0.20	E	999.9	9999	0.00	0	0	451	451

DAILY SUMMARIES

3 METER TEMP --- AVG = 28.3 MAX = 35.9 MIN = 21.8 AVG DEW POINT = 999.9 TOTAL PRCP = 0.00

10 METER WINDS -- AVG SPEED = 1.4 AVG DIR = 142 PEAK SPEED = 10.5 , OCCURRED DURING HOUR 21

NUMBER OF HOURS PER STABILITY CLASS A = 4 , B = 0, C = 1, D = 6, E = 6, F = 5, G = 2

WIPP METEOROLOGICAL DATA DAILY SUMMARY FOR 6/28/77

JULIAN DAY.HR	3 METER WIND DIR	SPD	PEAK SPD	TURB INT	10 METER WIND DIR	SPD	PEAK SPD	TURB INT	30 METER WIND DIR	SPD	PEAK SPD	TURB INT	BAROM PRESS
179. 0	113	2.0	6.0	99.99	108	3.4	9.0	99.99	119	6.0	9.3	99.99	891.6
179. 1	151	1.5	5.0	99.99	162	1.5	6.5	99.99	162	1.5	8.0	99.99	892.3
179. 2	65	1.5	4.0	99.99	60	1.9	7.0	99.99	108	2.0	2.5	99.99	892.0
179. 3	92	2.0	3.5	99.99	96	3.7	4.0	99.99	116	4.8	5.5	99.99	891.1
179. 4	130	2.0	3.5	99.99	120	1.6	4.0	99.99	130	6.5	7.3	99.99	890.8
179. 5	113	2.0	4.0	99.99	108	1.5	5.0	99.99	119	6.5	8.3	99.99	890.5
179. 6	130	3.5	6.0	99.99	120	4.0	4.0	99.99	130	8.0	10.8	99.99	891.4
179. 7	140	4.0	6.5	99.99	144	5.1	7.0	99.99	200	7.0	10.5	99.99	892.6
179. 8	173	4.0	6.0	99.99	180	3.9	8.5	99.99	189	4.5	9.0	99.99	893.0
179. 9	178	5.0	7.5	99.99	198	5.7	7.0	99.99	189	7.0	8.5	99.99	893.0
179.10	9999	999.9	999.9	99.99	9999	999.9	999.9	99.99	9999	999.9	999.9	99.99	9999.0
179.11	9999	999.9	999.9	99.99	9999	999.9	999.9	99.99	9999	999.9	999.9	99.99	9999.0
179.12	9999	999.9	999.9	99.99	9999	999.9	999.9	99.99	9999	999.9	999.9	99.99	9999.0
179.13	157	4.0	5.5	99.99	120	3.2	6.5	99.99	119	4.0	7.0	99.99	893.0
179.14	130	2.5	7.0	99.99	138	3.3	6.0	99.99	130	4.5	9.5	99.99	892.7
179.15	108	3.5	6.0	99.99	144	2.9	7.0	99.99	103	5.0	8.0	99.99	892.2
179.16	113	2.5	7.5	99.99	150	3.5	8.0	99.99	124	5.8	8.3	99.99	891.4
179.17	146	4.5	7.0	99.99	180	5.2	8.0	99.99	146	6.0	8.5	99.99	890.8
179.18	140	4.5	7.0	99.99	132	5.7	8.5	99.99	135	7.5	10.5	99.99	890.9
179.19	140	5.0	7.0	99.99	144	6.8	9.0	99.99	135	8.5	11.5	99.99	890.9
179.20	140	3.0	6.5	99.99	144	4.5	10.5	99.99	140	7.5	9.5	99.99	892.0
179.21	130	2.5	4.0	99.99	126	2.9	9.0	99.99	130	7.5	9.5	99.99	892.7
179.22	130	2.5	5.0	99.99	126	2.3	5.0	99.99	130	7.5	10.5	99.99	893.8
179.23	130	3.0	4.0	99.99	132	3.9	6.5	99.99	130	8.0	9.5	99.99	894.6

JULIAN DAY.HR	TEMPERATURES 3 M	10 M	30 M	DELTA TEMPS 10-3	30-3	30-10	STAB CLASS	DEW POINT	REL HUM	PRCP	RADIATION PARAMETERS SW SKY	SW REF	LW SKY	LW REF
179. 0	25.4	25.5	25.8	0.13	0.90	0.30	E	999.9	9999	0.00	0	0	448	442
179. 1	25.5	25.7	25.7	0.14	0.63	-0.03	E	999.9	9999	0.00	0	0	463	445
179. 2	22.8	23.5	25.4	0.73	3.13	1.88	G	999.9	9999	0.00	0	0	432	425
179. 3	22.8	23.1	24.8	0.30	2.58	1.73	G	999.9	9999	0.00	0	0	423	423
179. 4	22.4	22.6	23.0	0.19	1.15	0.42	F	999.9	9999	0.00	0	0	9999	423
179. 5	21.6	21.8	22.3	0.20	1.24	0.52	F	999.9	9999	0.00	0	0	415	418
179. 6	21.9	21.9	22.0	0.06	0.58	-0.01	E	999.9	9999	0.00	0	0	417	421
179. 7	21.9	21.8	21.8	-0.04	0.43	-0.07	E	999.9	9999	0.00	74	15	425	428
179. 8	24.5	24.3	24.1	-0.22	0.11	-0.22	D	999.9	9999	0.00	268	59	439	451
179. 9	27.5	26.9	26.6	-0.57	-0.35	-0.33	C	999.9	9999	0.00	319	119	452	486
179.10	999.9	999.9	999.9	99.99	99.99	99.99		999.9	9999	99.99	9999	9999	9999	9999
179.11	999.9	999.9	999.9	99.99	99.99	99.99		999.9	9999	99.99	9999	9999	9999	9999
179.12	999.9	999.9	999.9	99.99	99.99	99.99		999.9	9999	99.99	9999	9999	9999	9999
179.13	35.2	34.2	33.5	-0.99	-2.05	-0.77	A	999.9	9999	0.00	992	207	497	601
179.14	35.0	34.5	33.8	-0.58	-1.52	-0.80	A	999.9	9999	0.00	966	204	492	601
179.15	35.7	35.0	34.4	-0.68	-1.44	-0.68	A	999.9	9999	0.00	886	190	494	601
179.16	36.2	35.3	34.8	-0.92	-1.50	-0.53	A	999.9	9999	0.00	733	160	489	580
179.17	35.9	35.2	34.6	-0.67	-1.36	-0.68	A	999.9	9999	0.00	553	124	483	552
179.18	34.0	33.9	33.6	-0.18	-0.44	-0.26	D	999.9	9999	0.00	137	29	9999	511
179.19	33.6	33.3	33.0	-0.26	-0.60	-0.36	B	999.9	9999	0.00	200	51	496	509
179.20	30.3	30.6	30.8	0.25	0.48	0.22	E	999.9	9999	0.00	0	0	461	473
179.21	28.3	28.5	28.8	0.26	0.52	0.22	E	999.9	9999	0.00	0	0	453	461
179.22	27.5	27.7	27.9	0.18	0.30	0.08	E	999.9	9999	0.00	0	0	458	458
179.23	26.6	26.8	26.9	0.15	0.18	0.00	E	999.9	9999	0.00	0	0	449	451

DAILY SUMMARIES

3 METER TEMP --- AVG = 28.3 MAX = 36.2 MIN = 21.6 AVG DEW POINT = 999.9 TOTAL PRCP = 0.00

10 METER WINDS -- AVG SPEED = 3.2 AVG DIR = 140 PEAK SPEED = 10.5 , OCCURRED DURING HOUR 20

NUMBER OF HOURS PER STABILITY CLASS A = 5 , B = 1, C = 1, D = 2, E = 8, F = 2, G = 2

WIPP METEOROLOGICAL DATA DAILY SUMMARY FOR 6/29/77

JULIAN DAY.HR	3 METER WIND DIR	SPD	PEAK SPD	TURB INT	10 METER WIND DIR	SPD	PEAK SPD	TURB INT	30 METER WIND DIR	SPD	PEAK SPD	TURB INT	BAROM PRESS
180. 0	130	3.5	8.0	99.99	132	4.0	7.5	99.99	130	8.0	11.5	99.99	894.9
180. 1	135	3.5	6.0	99.99	144	4.6	10.0	99.99	140	7.5	9.5	99.99	895.0
180. 2	103	1.0	5.0	99.99	114	1.5	8.0	99.99	178	2.0	9.3	99.99	895.3
180. 3	115	0.5	1.5	99.99	198	0.6	7.0	99.99	194	1.5	3.0	99.99	895.8
180. 4	92	1.5	2.5	99.99	126	1.4	2.5	99.99	135	2.5	4.5	99.99	895.7
180. 5	56	1.0	3.0	99.99	114	2.6	3.5	99.99	108	3.3	3.5	99.99	895.6
180. 6	67	1.5	2.5	99.99	120	1.4	4.0	99.99	111	4.3	5.0	99.99	895.6
180. 7	61	1.5	2.5	99.99	108	2.5	4.0	99.99	103	4.5	5.0	99.99	895.8
180. 8	99	2.5	4.0	99.99	120	2.2	3.0	99.99	124	4.5	6.5	99.99	896.2
180. 9	110	3.0	5.0	99.99	138	3.3	4.5	99.99	135	4.5	6.5	99.99	896.4
180.10	135	3.5	5.5	99.99	138	3.6	4.5	99.99	140	6.0	7.8	99.99	896.4
180.11	135	3.5	6.5	99.99	150	4.5	6.5	99.99	140	6.5	999.9	99.99	896.0
180.12	119	4.0	7.0	99.99	120	3.0	4.5	99.99	124	6.0	8.8	99.99	895.8
180.13	140	3.5	8.0	99.99	156	5.5	8.0	99.99	146	5.5	9.5	99.99	895.2
180.14	162	3.5	6.5	99.99	168	4.9	8.0	99.99	146	4.0	8.0	99.99	893.8
180.15	135	2.5	6.5	99.99	120	3.3	8.0	99.99	135	5.0	7.5	99.99	892.8
180.16	157	3.5	8.0	99.99	150	4.2	8.0	99.99	162	6.0	9.3	99.99	892.1
180.17	135	4.0	6.5	99.99	144	4.3	10.0	99.99	135	5.3	9.3	99.99	891.3
180.18	130	3.0	5.5	99.99	132	3.8	7.5	99.99	130	4.5	7.5	99.99	890.4
180.19	157	3.5	6.0	99.99	168	4.8	7.0	99.99	162	6.0	7.3	99.99	890.6
180.20	146	2.5	5.5	99.99	150	3.7	7.5	99.99	151	5.5	8.5	99.99	890.8
180.21	162	2.0	5.5	99.99	162	3.2	7.0	99.99	130	3.5	9.5	99.99	891.3
180.22	135	1.5	2.5	99.99	150	2.9	7.0	99.99	157	5.0	6.3	99.99	891.9
180.23	124	1.5	2.5	99.99	120	0.9	3.5	99.99	130	5.5	6.5	99.99	891.9

JULIAN DAY.HR	TEMPERATURES 3 M	10 M	30 M	DELTA TEMPS 10-3	30-3	30-10	STAB CLASS	DEW POINT	REL HUM	PRCP	RADIATION PARAMETERS SW SKY	SW REF	LW SKY	LW REF
180. 0	25.6	25.8	25.8	0.16	0.17	-0.02	E	999.9	9999	0.00	0	0	448	446
180. 1	24.6	24.8	24.9	0.16	0.28	0.05	E	999.9	9999	0.00	0	0	436	439
180. 2	23.6	24.0	24.5	0.46	0.92	0.39	F	999.9	9999	0.00	0	0	436	429
180. 3	22.2	23.3	23.6	1.04	1.26	0.19	E	999.9	9999	0.00	0	0	436	421
180. 4	21.9	22.3	23.5	0.42	1.59	1.08	G	999.9	9999	0.00	0	0	9999	424
180. 5	21.0	21.3	23.2	0.22	2.18	1.88	G	999.9	9999	0.00	0	0	434	420
180. 6	21.0	21.2	21.8	0.13	0.82	0.60	F	999.9	9999	0.00	3	0	9999	419
180. 7	21.6	21.5	21.8	-0.21	0.09	0.22	E	999.9	9999	0.00	89	22	425	430
180. 8	23.5	23.3	22.8	-0.28	-0.68	-0.52	A	999.9	9999	0.00	312	73	441	454
180. 9	25.1	24.5	24.1	-0.60	-0.97	-0.48	A	999.9	9999	0.00	508	116	453	485
180.10	26.2	25.3	24.7	-0.86	-1.39	-0.64	A	999.9	9999	0.00	719	159	456	500
180.11	26.4	25.6	25.0	-0.74	-1.31	-0.70	A	999.9	9999	0.00	619	135	458	500
180.12	27.9	27.1	26.6	-0.80	-1.26	-0.58	A	999.9	9999	0.00	876	190	469	538
180.13	28.6	28.0	27.5	-0.56	-0.96	-0.58	A	999.9	9999	0.00	513	110	468	509
180.14	31.6	31.5	30.7	-0.20	-0.90	-0.89	A	999.9	9999	0.00	1063	226	484	574
180.15	31.8	31.0	30.6	-0.78	-1.10	-0.53	A	999.9	9999	0.00	856	184	481	553
180.16	31.9	31.5	31.0	-0.52	-0.82	-0.51	A	999.9	9999	0.00	164	31	467	516
180.17	32.8	32.0	31.4	-0.80	-1.24	-0.64	A	999.9	9999	0.00	570	128	474	536
180.18	32.0	31.7	31.4	-0.26	-0.45	-0.38	A	999.9	9999	0.00	167	34	457	499
180.19	31.2	31.2	31.0	-0.06	-0.08	-0.22	D	999.9	9999	0.00	149	37	464	489
180.20	28.6	29.0	29.3	0.34	0.83	0.26	E	999.9	9999	0.00	0	0	449	461
180.21	26.2	26.8	27.4	0.53	1.32	0.58	F	999.9	9999	0.00	0	0	445	445
180.22	23.7	24.6	26.3	0.92	2.73	1.62	G	999.9	9999	0.00	0	0	437	434
180.23	23.2	23.7	26.7	0.56	3.75	2.96	G	999.9	9999	0.00	0	0	432	432

DAILY SUMMARIES

3 METER TEMP --- AVG = 26.3 MAX = 32.8 MIN = 21.0 AVG DEW POINT = 999.9 TOTAL PRCP = 0.00

10 METER WINDS -- AVG SPEED = 3.0 AVG DIR = 142 PEAK SPEED = 10.0 , OCCURRED DURING HOUR 1

NUMBER OF HOURS PER STABILITY CLASS A = 11 , B = 0, C = 0, D = 1, E = 5, F = 3, G = 4

WIPP METEOROLOGICAL DATA DAILY SUMMARY FOR 6/30/77

JULIAN DAY.HR	3 METER WIND DIR	SPD	PEAK SPD	TURB INT	10 METER WIND DIR	SPD	PEAK SPD	TURB INT	30 METER WIND DIR	SPD	PEAK SPD	TURB INT	BAROM PRESS
181. 0	130	2.0	3.0	99.99	126	2.1	3.5	99.99	130	9.0	10.0	99.99	892.1
181. 1	173	2.0	7.0	99.99	162	2.8	4.5	99.99	167	3.0	9.5	99.99	892.6
181. 2	140	2.5	3.5	99.99	144	3.6	7.5	99.99	151	5.5	6.3	99.99	892.7
181. 3	151	6.5	7.0	99.99	156	6.0	4.0	99.99	159	8.5	9.3	99.99	891.3
181. 4	157	3.5	7.5	99.99	144	4.6	7.5	99.99	167	6.0	10.8	99.99	890.8
181. 5	151	2.0	4.0	99.99	144	2.9	9.0	99.99	157	4.5	6.5	99.99	890.8
181. 6	157	3.0	4.5	99.99	162	3.7	3.0	99.99	165	5.5	7.3	99.99	891.4
181. 7	151	3.0	4.0	99.99	162	3.8	5.5	99.99	162	5.0	7.0	99.99	891.6
181. 8	157	4.0	6.0	99.99	174	4.6	6.0	99.99	178	6.5	7.5	99.99	891.7
181. 9	173	4.5	6.5	99.99	168	4.7	6.0	99.99	184	5.5	7.5	99.99	892.0
181.10	184	3.5	6.0	99.99	198	4.9	6.5	99.99	205	4.5	8.0	99.99	892.0
181.11	211	2.5	6.0	99.99	228	3.5	4.5	99.99	238	4.5	6.5	99.99	892.3
181.12	184	3.5	8.0	99.99	204	3.0	6.0	99.99	194	5.5	8.5	99.99	892.3
181.13	135	1.5	5.5	99.99	144	1.5	7.5	99.99	130	2.5	4.8	99.99	892.0
181.14	184	2.0	5.0	99.99	102	2.5	5.0	99.99	189	3.5	6.3	99.99	891.3
181.15	61	1.5	6.0	99.99	96	1.2	5.5	99.99	115	4.5	6.5	99.99	891.2
181.16	130	2.0	6.5	99.99	108	2.9	6.0	99.99	140	4.0	7.5	99.99	891.0
181.17	81	1.0	4.0	99.99	66	0.9	7.0	99.99	77	1.8	6.0	99.99	890.4
181.18	146	1.5	3.5	99.99	144	2.7	5.0	99.99	148	3.0	4.0	99.99	890.5
181.19	113	0.8	3.0	99.99	120	0.6	3.0	99.99	121	3.0	3.5	99.99	890.8
181.20	70	2.0	2.5	99.99	126	1.9	3.0	99.99	81	2.0	4.0	99.99	891.2
181.21	135	4.5	7.5	99.99	144	6.1	3.5	99.99	140	8.0	10.0	99.99	892.4
181.22	135	3.5	8.5	99.99	144	4.7	9.0	99.99	146	6.0	11.3	99.99	893.2
181.23	124	1.5	4.5	99.99	132	1.5	8.5	99.99	130	5.5	6.5	99.99	893.8

JULIAN DAY.HR	TEMPERATURES 3 M	10 M	30 M	DELTA TEMPS 10-3	30-3	30-10	STAB CLASS	DEW POINT	REL HUM	PRCP	RADIATION PARAMETERS SW SKY	SW REF	LW SKY	LW REF
181. 0	22.5	22.8	23.7	0.31	1.30	0.76	F	999.9	9999	0.00	0	0	425	429
181. 1	22.2	22.3	22.4	0.10	0.44	0.10	E	999.9	9999	0.00	0	0	422	422
181. 2	20.5	20.9	21.4	0.40	1.05	0.42	F	999.9	9999	0.00	0	0	418	417
181. 3	21.4	21.5	21.7	0.15	0.52	0.12	E	999.9	9999	0.00	0	0	424	423
181. 4	21.0	21.2	21.4	0.18	0.55	0.17	E	999.9	9999	0.00	0	0	9999	419
181. 5	20.6	20.9	21.3	0.30	0.78	0.27	E	999.9	9999	0.00	0	0	415	415
181. 6	20.4	20.6	21.1	0.18	0.86	0.46	F	999.9	9999	0.00	11	3	433	417
181. 7	21.9	21.8	21.8	-0.06	0.06	-0.12	D	999.9	9999	0.00	151	37	425	435
181. 8	24.3	24.1	23.9	-0.21	-0.30	-0.33	C	999.9	9999	0.00	382	88	441	459
181. 9	26.5	26.1	25.8	-0.42	-0.63	-0.45	A	999.9	9999	0.00	646	147	457	492
181.10	28.4	27.8	27.1	-0.65	-1.16	-0.76	A	999.9	9999	0.00	402	87	472	506
181.11	30.1	29.6	29.2	-0.44	-0.72	-0.52	A	999.9	9999	0.00	1124	244	504	569
181.12	31.1	30.5	30.1	-0.53	-0.74	-0.48	A	999.9	9999	0.00	313	59	469	519
181.13	32.2	31.9	31.6	-0.32	-0.40	-0.36	B	999.9	9999	0.00	1204	255	9999	575
181.14	33.8	33.5	33.1	-0.36	-0.53	-0.43	A	999.9	9999	0.00	1050	220	495	599
181.15	35.3	34.5	33.9	-0.88	-1.27	-0.64	A	999.9	9999	0.00	924	198	497	604
181.16	35.2	34.5	33.9	-0.76	-1.13	-0.62	A	999.9	9999	0.00	522	113	491	555
181.17	33.5	33.5	33.4	-0.05	0.01	-0.19	D	999.9	9999	0.00	286	62	495	526
181.18	33.7	33.5	33.2	-0.14	-0.20	-0.31	C	999.9	9999	0.00	181	39	489	510
181.19	32.3	32.5	32.8	0.16	0.64	0.25	E	999.9	9999	0.00	55	12	491	490
181.20	30.0	30.4	30.5	0.38	0.75	0.12	E	999.9	9999	0.00	0	0	486	472
181.21	28.3	28.4	28.5	0.13	0.38	0.00	E	999.9	9999	0.00	0	0	472	464
181.22	26.4	26.5	26.6	0.15	0.42	0.06	E	999.9	9999	0.00	0	0	454	450
181.23	24.6	24.8	25.4	0.27	0.96	0.46	F	999.9	9999	0.00	0	0	441	439

DAILY SUMMARIES

3 METER TEMP --- AVG = 27.3 MAX = 35.3 MIN = 20.4 AVG DEW POINT = 999.9 TOTAL PRCP = 0.00

10 METER WINDS -- AVG SPEED = 2.8 AVG DIR = 154 PEAK SPEED = 9.0 , OCCURRED DURING HOUR 5

NUMBER OF HOURS PER STABILITY CLASS A = 7 , B = 1, C = 2, D = 2, E = 8, F = 4, G = 0

WIPP METEOROLOGICAL DATA DAILY SUMMARY FOR 7/ 1/77

JULIAN DAY.HR	3 METER WIND DIR	SPD	PEAK SPD	TURB INT	10 METER WIND DIR	SPD	PEAK SPD	TURB INT	30 METER WIND DIR	SPD	PEAK SPD	TURB INT	BAROM PRESS
182. 0	140	2.0	4.5	99.99	144	3.1	5.0	99.99	140	5.5	8.3	99.99	894.0
182. 1	146	3.0	5.0	99.99	150	4.0	5.5	99.99	157	5.5	7.5	99.99	894.0
182. 2	151	2.0	4.5	99.99	156	3.1	6.0	99.99	162	4.5	7.0	99.99	894.0
182. 3	130	1.5	2.5	99.99	144	3.7	5.5	99.99	130	6.3	7.0	99.99	894.2
182. 4	130	1.5	3.5	99.99	184	3.3	4.0	99.99	146	5.5	8.0	99.99	894.6
182. 5	167	1.0	2.5	99.99	168	2.1	4.5	99.99	189	2.0	6.5	99.99	895.0
182. 6	97	0.5	1.5	99.99	210	0.7	4.5	99.99	189	2.0	3.0	99.99	895.4
182. 7	151	1.5	2.5	99.99	150	2.4	2.5	99.99	162	3.0	5.5	99.99	895.8
182. 8	178	2.0	3.0	99.99	186	2.7	3.0	99.99	216	2.5	4.5	99.99	896.2
182. 9	178	2.0	3.5	99.99	210	2.9	4.0	99.99	243	3.0	4.0	99.99	896.4
182.10	259	2.5	4.0	99.99	252	2.0	4.5	99.99	9999	3.3	4.8	99.99	896.5
182.11	238	1.5	4.0	99.99	234	1.4	4.5	99.99	9999	2.3	5.0	99.99	896.5
182.12	194	1.5	3.5	99.99	234	1.5	4.5	99.99	9999	2.0	4.5	99.99	896.5
182.13	243	2.5	5.0	99.99	180	3.3	5.5	99.99	9999	4.0	5.5	99.99	896.4
182.14	119	3.0	8.5	99.99	162	4.1	10.0	99.99	9999	5.5	9.8	99.99	896.0
182.15	130	3.0	7.0	99.99	132	4.1	9.5	99.99	9999	7.0	10.0	99.99	895.1
182.16	140	4.5	8.5	99.99	126	4.6	11.0	99.99	9999	7.0	10.5	99.99	894.2
182.17	135	4.0	10.0	99.99	126	3.3	11.5	99.99	9999	5.0	13.0	99.99	893.8
182.18	157	3.5	8.0	99.99	162	6.2	10.0	99.99	9999	7.5	10.5	99.99	893.6
182.19	146	4.0	9.0	99.99	150	6.2	10.5	99.99	9999	8.5	11.8	99.99	893.6
182.20	151	5.0	8.0	99.99	156	6.5	10.0	99.99	9999	7.0	11.3	99.99	893.9
182.21	162	5.0	7.5	99.99	168	6.6	8.5	99.99	9999	7.5	9.5	99.99	894.6
182.22	162	4.0	9.0	99.99	174	5.2	11.0	99.99	9999	6.5	12.0	99.99	895.2
182.23	140	4.0	8.0	99.99	156	5.6	9.5	99.99	9999	6.5	11.5	99.99	895.4

JULIAN DAY.HR	TEMPERATURES 3 M	10 M	30 M	DELTA TEMPS 10-3	30-3	30-10	STAB CLASS	DEW POINT	REL HUM	PRCP	RADIATION PARAMETERS SW SKY	SW REF	LW SKY	LW REF
182. 0	23.3	23.7	24.4	0.44	1.30	0.62	F	999.9	9999	0.00	0	0	435	432
182. 1	23.3	23.6	23.7	0.18	0.54	0.11	E	999.9	9999	0.00	0	0	433	432
182. 2	21.9	22.6	23.0	0.66	1.32	0.42	F	999.9	9999	0.00	0	0	430	424
182. 3	21.2	21.7	22.8	0.43	1.66	1.00	G	999.9	9999	0.00	0	0	438	423
182. 4	21.4	21.7	22.6	0.35	1.44	0.85	G	999.9	9999	0.00	0	0	434	421
182. 5	20.3	21.2	21.9	0.87	1.72	0.60	F	999.9	9999	0.00	0	0	420	410
182. 6	19.1	20.2	20.9	1.19	2.07	0.66	F	999.9	9999	0.00	6	0	415	405
182. 7	21.6	21.6	21.7	-0.08	0.24	0.08	E	999.9	9999	0.00	134	33	430	435
182. 8	24.1	23.7	23.4	-0.39	-0.48	-0.33	C	999.9	9999	0.00	311	72	444	454
182. 9	25.7	25.4	25.2	-0.40	-0.36	-1.50	A	999.9	9999	0.00	556	125	458	490
182.10	28.0	27.4	27.1	-0.56	-0.72	-0.41	A	999.9	9999	0.00	735	161	472	526
182.11	29.6	29.5	28.8	-0.01	-0.47	-0.70	A	999.9	9999	0.00	878	187	486	561
182.12	31.1	30.9	31.2	-0.24	0.17	0.17	E	999.9	9999	0.00	966	205	497	601
182.13	33.2	32.6	32.1	-0.55	-0.84	-0.56	A	999.9	9999	0.00	1004	211	306	596
182.14	34.0	33.5	32.5	-0.55	-1.29	-0.99	A	999.9	9999	0.00	986	207	495	594
182.15	34.7	33.5	33.1	-1.16	-1.40	-0.52	A	999.9	9999	0.00	952	205	502	590
182.16	34.0	33.2	32.1	-0.92	-1.80	-1.12	A	999.9	9999	0.00	740	163	494	573
182.17	34.0	32.9	32.4	-1.08	-1.44	-0.60	A	999.9	9999	0.00	546	124	487	552
182.18	33.0	32.4	31.9	-0.56	-0.90	-0.58	A	999.9	9999	0.00	341	78	485	523
182.19	31.2	31.1	30.9	-0.10	-0.08	-0.22	D	999.9	9999	0.00	74	18	472	488
182.20	29.5	29.6	29.5	0.08	0.24	-0.06	E	999.9	9999	0.00	0	0	460	469
182.21	28.2	28.3	28.2	0.05	0.20	-0.12	D	999.9	9999	0.00	0	0	466	464
182.22	26.2	26.2	26.2	0.07	0.26	-0.05	E	999.9	9999	0.00	0	0	452	451
182.23	24.4	24.6	24.6	0.12	0.32	-0.04	E	999.9	9999	0.00	0	0	437	441

DAILY SUMMARIES

3 METER TEMP --- AVG = 27.2 MAX = 34.7 MIN = 19.1 AVG DEW POINT = 999.9 TOTAL PRCP = 0.00

10 METER WINDS -- AVG SPEED = 3.3 AVG DIR = 160 PEAK SPEED = 11.5 , OCCURRED DURING HOUR 17

NUMBER OF HOURS PER STABILITY CLASS A = 9 , B = 0, C = 1, D = 2, E = 6, F = 4, G = 2

WIPP METEOROLOGICAL DATA DAILY SUMMARY FOR 7/ 2/77

JULIAN DAY.HR	3 METER WIND DIR	SPD	PEAK SPD	TURB INT	10 METER WIND DIR	SPD	PEAK SPD	TURB INT	30 METER WIND DIR	SPD	PEAK SPD	TURB INT	BAROM PRESS
183. 0	135	3.5	5.5	99.99	144	5.4	7.0	99.99	9999	7.0	8.8	99.99	895.7
183. 1	140	3.0	6.5	99.99	150	4.5	8.5	99.99	9999	6.5	9.0	99.99	896.0
183. 2	140	3.0	6.0	99.99	150	4.7	7.5	99.99	9999	5.5	8.0	99.99	896.4
183. 3	130	1.5	4.0	99.99	132	1.9	6.0	99.99	9999	5.5	7.5	99.99	896.4
183. 4	324	1.5	3.0	99.99	348	2.0	3.5	99.99	9999	3.0	7.3	99.99	896.8
183. 5	104	1.5	2.5	99.99	126	1.2	2.5	99.99	9999	5.0	7.0	99.99	896.0
183. 6	61	1.5	2.0	99.99	114	3.2	4.0	99.99	9999	5.0	5.3	99.99	896.5
183. 7	88	1.5	2.0	99.99	126	1.3	4.0	99.99	9999	5.5	6.5	99.99	896.6
183. 8	157	4.5	6.5	99.99	156	5.4	7.5	99.99	9999	5.5	8.3	99.99	896.5
183. 9	162	4.5	6.5	99.99	168	5.3	7.0	99.99	9999	5.3	8.0	99.99	896.8
183.10	162	3.5	6.0	99.99	174	3.8	8.0	99.99	9999	4.0	8.0	99.99	896.8
183.11	184	4.0	7.0	99.99	180	3.6	8.0	99.99	9999	5.3	7.5	99.99	896.7
183.12	178	3.0	7.5	99.99	180	4.1	9.0	99.99	9999	4.5	8.3	99.99	896.4
183.13	162	4.5	6.5	99.99	180	5.1	8.0	99.99	9999	6.0	8.5	99.99	895.5
183.14	151	5.5	9.5	99.99	180	6.0	11.0	99.99	9999	7.0	10.0	99.99	894.7
183.15	173	5.5	9.5	99.99	180	6.3	11.0	99.99	9999	7.5	11.0	99.99	894.1
183.16	151	4.0	9.0	99.99	156	5.6	10.0	99.99	9999	6.5	9.5	99.99	893.4
183.17	162	5.0	9.0	99.99	162	6.5	10.5	99.99	9999	7.0	10.5	99.99	892.8
183.18	157	5.0	9.5	99.99	162	6.0	10.5	99.99	9999	7.0	11.5	99.99	892.5
183.19	146	6.0	9.5	99.99	138	7.5	11.5	99.99	9999	9.5	12.5	99.99	892.1
183.20	151	6.5	10.0	99.99	150	8.0	12.0	99.99	9999	11.0	12.3	99.99	892.2
183.21	146	5.5	10.0	99.99	156	8.3	12.0	99.99	9999	9.8	13.5	99.99	892.5
183.22	140	4.5	8.0	99.99	150	6.8	11.0	99.99	9999	7.5	11.8	99.99	893.2
183.23	130	3.5	7.5	99.99	138	5.2	9.0	99.99	9999	7.0	9.5	99.99	893.8

JULIAN DAY.HR	TEMPERATURES 3 M	10 M	30 M	DELTA TEMPS 10-3	30-3	30-10	STAB CLASS	DEW POINT	REL HUM	PRCP	RADIATION PARAMETERS SW SKY	SW REF	LW SKY	LW REF
183. 0	23.5	23.6	23.7	0.11	0.34	0.00	E	999.9	9999	0.00	0	0	432	435
183. 1	22.8	23.0	23.1	0.14	0.42	0.06	E	999.9	9999	0.00	0	0	426	429
183. 2	22.6	22.8	23.0	0.16	0.50	0.12	E	999.9	9999	0.00	0	0	427	429
183. 3	21.1	21.4	21.9	0.27	0.99	0.50	F	999.9	9999	0.00	0	0	428	421
183. 4	20.9	21.2	21.4	0.30	0.64	0.12	E	999.9	9999	0.00	0	0	431	420
183. 5	20.5	20.7	21.4	0.22	1.06	0.60	F	999.9	9999	0.00	0	0	430	419
183. 6	19.8	20.1	21.0	0.27	1.32	0.81	G	999.9	9999	0.00	5	0	423	413
183. 7	20.1	20.3	20.7	0.16	0.80	0.40	F	999.9	9999	0.00	35	7	410	416
183. 8	23.3	22.9	22.5	-4.44	-0.70	-0.49	A	999.9	9999	0.00	373	87	427	448
183. 9	25.8	25.3	24.9	-0.52	-0.80	-0.50	A	999.9	9999	0.00	575	130	439	478
183.10	27.4	26.9	26.4	-0.50	-0.88	-0.62	A	999.9	9999	0.00	763	167	452	518
183.11	29.2	28.8	28.1	-0.56	-1.10	-0.80	A	999.9	9999	0.00	908	194	462	544
183.12	29.5	28.7	28.3	-0.88	-1.10	-0.48	A	999.9	9999	0.00	988	211	477	577
183.13	31.5	30.4	29.6	-1.14	-1.74	-0.86	A	999.9	9999	0.00	1020	215	479	583
183.14	32.2	31.0	30.4	-1.28	-1.70	-0.66	A	999.9	9999	0.00	999	210	483	576
183.15	33.4	32.2	31.7	-1.20	-1.52	-0.58	A	999.9	9999	0.00	916	198	495	588
183.16	33.3	32.7	32.2	-0.66	-0.98	-0.56	A	999.9	9999	0.00	750	166	492	575
183.17	33.3	32.3	31.6	-0.94	-1.48	-0.76	A	999.9	9999	0.00	551	125	478	545
183.18	33.2	32.6	32.1	-0.52	-0.88	-0.60	A	999.9	9999	0.00	348	80	475	523
183.19	31.6	31.3	31.0	-0.30	-0.43	-0.37	B	999.9	9999	0.00	139	34	470	494
183.20	29.6	29.6	29.5	0.00	0.12	-0.12	D	999.9	9999	0.00	0	0	462	471
183.21	27.2	27.2	27.2	0.04	0.19	-0.09	E	999.9	9999	0.00	0	0	453	458
183.22	26.0	26.1	26.2	0.09	0.28	-0.03	E	999.9	9999	0.00	0	0	445	449
183.23	24.9	25.0	25.0	0.12	0.28	-0.08	E	999.9	9999	0.00	0	0	439	442

DAILY SUMMARIES

3 METER TEMP -- AVG = 26.8 MAX = 33.4 MIN = 19.8 AVG DEW POINT = 999.9 TOTAL PRCP = 0.00

10 METER WINDS -- AVG SPEED = 4.5 AVG DIR = 157 PEAK SPEED = 12.0 , OCCURRED DURING HOUR 20

NUMBER OF HOURS PER STABILITY CLASS A = 11 , B = 1, C = 0, D = 1, E = 7, F = 3, G = 1

WIPP METEOROLOGICAL DATA DAILY SUMMARY FOR 7/ 3/77

JULIAN DAY.HR	3 METER WIND DIR	SPD	PEAK SPD	TURB INT	10 METER WIND DIR	SPD	PEAK SPD	TURB INT	30 METER WIND DIR	SPD	PEAK SPD	TURB INT	BAROM PRESS
184. 0	135	4.0	7.0	99.99	138	5.7	9.5	99.99	9999	7.5	10.8	99.99	893.8
184. 1	135	5.0	8.0	99.99	144	6.9	10.5	99.99	9999	9.0	12.5	99.99	893.8
184. 2	135	4.0	8.5	99.99	138	5.6	10.5	99.99	9999	8.0	11.5	99.99	893.8
184. 3	135	3.5	6.5	99.99	138	4.6	9.0	99.99	9999	7.5	10.0	99.99	893.8
184. 4	130	3.5	5.5	99.99	132	3.6	8.5	99.99	9999	8.0	10.3	99.99	893.8
184. 5	135	4.0	6.5	99.99	138	4.4	8.5	99.99	9999	7.5	10.5	99.99	893.8
184. 6	135	3.5	6.5	99.99	138	4.3	9.0	99.99	9999	7.5	10.3	99.99	894.3
184. 7	135	4.5	8.0	99.99	144	6.3	8.5	99.99	9999	8.0	9.5	99.99	894.5
184. 8	151	5.5	9.5	99.99	150	7.4	10.5	99.99	9999	9.0	10.5	99.99	894.7
184. 9	151	5.0	8.5	99.99	156	7.7	10.0	99.99	9999	8.0	10.0	99.99	894.7
184.10	157	5.0	8.0	99.99	162	6.0	9.0	99.99	9999	6.3	9.5	99.99	894.7
184.11	162	4.5	8.5	99.99	168	5.2	8.5	99.99	9999	6.0	8.5	99.99	894.7
184.12	157	4.0	7.5	99.99	174	3.9	8.5	99.99	9999	6.0	8.5	99.99	894.2
184.13	167	4.5	8.0	99.99	180	5.6	8.5	99.99	9999	6.5	9.3	99.99	893.6
184.14	167	5.0	9.0	99.99	162	6.4	10.0	99.99	9999	6.5	11.3	99.99	893.0
184.15	173	4.5	9.0	99.99	186	4.7	9.5	99.99	9999	7.0	10.5	99.99	892.3
184.16	167	5.5	9.5	99.99	162	6.6	11.0	99.99	9999	7.0	10.8	99.99	891.6
184.17	162	4.0	9.0	99.99	156	4.4	10.5	99.99	9999	7.5	11.3	99.99	891.0
184.18	162	5.5	9.5	99.99	156	5.5	10.5	99.99	9999	8.0	10.5	99.99	890.8
184.19	140	6.0	9.0	99.99	150	7.2	11.0	99.99	9999	9.5	11.8	99.99	890.8
184.20	135	7.5	10.0	99.99	156	9.7	13.0	99.99	9999	12.0	14.5	99.99	891.3
184.21	151	8.0	10.0	99.99	156	9.8	13.0	99.99	9999	13.0	14.5	99.99	892.4
184.22	140	6.5	11.5	99.99	150	8.7	14.0	99.99	9999	10.0	15.0	99.99	893.2
184.23	140	5.5	9.0	99.99	150	7.6	12.5	99.99	9999	9.0	13.0	99.99	894.2

JULIAN DAY.HR	TEMPERATURES 3 M	10 M	30 M	DELTA TEMPS 10-3	30-3	30-10	STAB CLASS	DEW POINT	REL HUM	PRCP	RADIATION PARAMETERS SW SKY	SW REF	LW SKY	LW REF
184. 0	24.0	24.1	24.2	0.10	0.30	-0.04	E	999.9	9999	0.00	0	0	436	437
184. 1	22.6	22.7	22.7	0.06	0.22	-0.05	E	999.9	9999	0.00	0	0	429	430
184. 2	21.7	21.8	21.8	0.08	0.22	-0.08	E	999.9	9999	0.00	0	0	425	424
184. 3	20.9	21.0	21.0	0.08	0.26	-0.06	E	999.9	9999	0.00	0	0	423	420
184. 4	20.2	20.3	20.3	0.06	0.24	-0.05	E	999.9	9999	0.00	0	0	419	416
184. 5	19.9	20.0	20.0	0.08	0.28	0.00	E	999.9	9999	0.00	0	0	418	415
184. 6	19.6	19.7	19.8	0.11	0.32	0.00	E	999.9	9999	0.00	8	0	415	414
184. 7	20.8	20.6	20.4	-0.17	-0.18	-0.25	D	999.9	9999	0.00	137	33	423	427
184. 8	22.8	22.4	22.0	-0.44	-0.68	-0.48	A	999.9	9999	0.00	348	80	434	444
184. 9	25.1	24.3	23.7	-0.74	-1.18	-0.66	A	999.9	9999	0.00	571	130	444	475
184.10	27.6	27.0	26.0	-0.68	-1.52	-1.08	A	999.9	9999	0.00	759	167	458	513
184.11	27.8	27.7	27.1	-0.10	-0.50	-0.64	A	999.9	9999	0.00	902	194	470	548
184.12	30.5	29.8	29.4	-0.74	-0.96	-0.47	A	999.9	9999	0.00	988	210	477	568
184.13	32.1	31.4	30.7	-0.75	-1.24	-0.72	A	999.9	9999	0.00	1018	215	487	588
184.14	32.4	31.8	31.0	-0.68	-1.28	-0.84	A	999.9	9999	0.00	990	211	483	589
184.15	33.1	32.3	31.1	-0.81	-1.16	-0.58	A	999.9	9999	0.00	896	194	486	590
184.16	33.8	33.2	32.3	-0.64	-1.30	-0.91	A	999.9	9999	0.00	763	171	488	584
184.17	34.5	33.9	33.4	-0.66	-1.00	-0.60	A	999.9	9999	0.00	597	137	492	562
184.18	33.2	32.8	32.4	-0.38	-0.60	-0.48	A	999.9	9999	0.00	105	19	477	508
184.19	32.4	32.1	31.8	-0.29	-0.38	-0.35	B	999.9	9999	0.00	150	37	475	501
184.20	29.6	29.6	29.5	-0.01	0.11	-0.14	D	999.9	9999	0.00	0	0	462	472
184.21	28.4	28.5	28.5	0.06	0.25	-0.08	E	999.9	9999	0.00	0	0	457	465
184.22	26.1	26.2	26.1	0.03	0.18	-0.10	D	999.9	9999	0.00	0	0	444	451
184.23	25.0	25.1	25.1	0.08	0.24	-0.06	E	999.9	9999	0.00	0	0	439	443

DAILY SUMMARIES

3 METER TEMP --- AVG = 26.8 MAX = 34.5 MIN = 19.6 AVG DEW POINT = 999.9 TOTAL PRCP = 0.00

10 METER WINDS -- AVG SPEED = 6.0 AVG DIR = 154 PEAK SPEED = 14.0 , OCCURRED DURING HOUR 22

NUMBER OF HOURS PER STABILITY CLASS A = 11 , B = 1, C = 0, D = 3, E = 9, F = 0, G = 0

WIPP METEOROLOGICAL DATA DAILY SUMMARY FOR 7/ 4/77

JULIAN DAY.HR	3 METER WIND DIR	SPD	PEAK SPD	TURB INT	10 METER WIND DIR	SPD	PEAK SPD	TURB INT	30 METER WIND DIR	SPD	PEAK SPD	TURB INT	BAROM PRESS
185. 0	140	6.5	8.5	99.99	150	8.2	12.0	99.99	9999	9.5	13.3	99.99	894.2
185. 1	140	6.0	9.5	99.99	150	8.7	12.0	99.99	9999	9.0	13.0	99.99	894.2
185. 2	140	5.5	10.0	99.99	150	7.4	11.5	99.99	9999	8.8	12.5	99.99	894.2
185. 3	140	5.0	8.5	99.99	150	7.4	11.5	99.99	9999	9.0	11.8	99.99	894.2
185. 4	146	5.5	9.0	99.99	156	7.9	11.0	99.99	9999	9.5	11.5	99.99	894.6
185. 5	151	5.0	9.0	99.99	150	6.8	11.5	99.99	9999	8.5	11.3	99.99	894.9
185. 6	146	4.0	8.5	99.99	150	6.2	10.5	99.99	9999	7.5	11.3	99.99	895.3
185. 7	146	4.5	7.5	99.99	156	6.0	10.0	99.99	9999	8.0	10.8	99.99	895.8
185. 8	146	5.0	8.0	99.99	156	7.0	10.0	99.99	9999	12.5	10.5	99.99	896.2
185. 9	157	6.0	9.0	99.99	168	6.8	10.5	99.99	9999	8.0	11.5	99.99	896.2
185.10	146	5.0	9.5	99.99	162	6.1	10.0	99.99	9999	8.0	10.8	99.99	896.2
185.11	167	5.0	8.0	99.99	180	4.5	9.0	99.99	9999	7.0	10.5	99.99	896.1
185.12	167	4.0	8.5	99.99	216	4.6	9.5	99.99	9999	6.5	10.5	99.99	896.2
185.13	173	6.0	8.5	99.99	198	5.9	9.0	99.99	9999	6.5	9.8	99.99	895.8
185.14	162	7.5	10.0	99.99	162	5.4	12.0	99.99	9999	10.0	12.8	99.99	894.9
185.15	151	7.5	12.0	99.99	168	9.3	12.5	99.99	9999	9.0	12.8	99.99	894.2
185.16	140	7.0	11.0	99.99	156	7.0	16.0	99.99	9999	10.0	15.3	99.99	893.6
185.17	140	7.0	11.5	99.99	144	8.7	13.5	99.99	9999	11.0	14.0	99.99	893.2
185.18	146	7.5	12.0	99.99	150	8.9	14.0	99.99	9999	10.5	14.3	99.99	892.9
185.19	135	6.0	11.0	99.99	144	7.7	13.5	99.99	9999	11.0	14.3	99.99	892.8
185.20	140	5.0	10.0	99.99	150	7.6	12.0	99.99	9999	10.5	13.3	99.99	893.5
185.21	146	4.5	8.5	99.99	150	6.0	9.5	99.99	9999	8.0	11.0	99.99	894.7
185.22	178	6.5	9.5	99.99	204	8.0	5.5	99.99	9999	9.0	12.8	99.99	896.4
185.23	340	1.5	7.5	99.99	36	1.9	9.0	99.99	9999	2.3	10.5	99.99	897.1

JULIAN DAY.HR	TEMPERATURES 3 M	10 M	30 M	DELTA TEMPS 10-3	30-3	30-10	STAB CLASS	DEW POINT	REL HUM	PRCP	RADIATION PARAMETERS SW SKY	SW REF	LW SKY	LW REF
185. 0	24.4	24.5	24.5	0.05	0.22	-0.07	E	999.9	9999	0.00	0	0	441	440
185. 1	23.9	24.0	23.9	0.03	0.20	-0.08	E	999.9	9999	0.00	0	0	437	436
185. 2	23.6	23.6	23.6	0.05	0.20	-0.09	E	999.9	9999	0.00	0	0	449	437
185. 3	23.4	23.4	23.4	0.00	0.10	-0.13	D	999.9	9999	0.00	0	0	469	437
185. 4	23.1	23.2	23.1	0.04	0.19	-0.08	E	999.9	9999	0.00	0	0	451	434
185. 5	22.7	22.8	22.7	0.07	0.22	-0.08	E	999.9	9999	0.00	0	0	443	431
185. 6	21.8	21.9	21.8	0.01	0.16	-0.09	E	999.9	9999	0.00	9	2	445	427
185. 7	21.9	21.8	21.6	-0.14	-0.15	-0.25	D	999.9	9999	0.00	149	36	431	434
185. 8	23.9	23.4	23.1	-0.46	-0.58	-0.36	B	999.9	9999	0.00	366	85	443	453
185. 9	26.2	25.7	25.1	-0.54	-0.94	-0.63	A	999.9	9999	0.00	559	127	457	486
185.10	28.0	27.2	26.5	-0.85	-1.31	-0.68	A	999.9	9999	0.00	747	164	468	518
185.11	29.5	28.8	28.2	-0.77	-1.06	-0.54	A	999.9	9999	0.00	893	192	473	544
185.12	30.4	29.5	29.2	-0.84	-0.98	-0.37	B	999.9	9999	0.00	972	208	483	573
185.13	30.6	29.9	29.5	-0.75	-0.93	-0.43	A	999.9	9999	0.00	488	99	472	540
185.14	33.0	32.0	31.3	-0.99	-1.57	-0.83	A	999.9	9999	0.00	1031	219	492	580
185.15	34.1	32.9	31.6	-1.21	-2.30	-1.37	A	999.9	9999	0.00	891	194	485	574
185.16	34.1	33.3	32.8	-0.86	-1.22	-0.62	A	999.9	9999	0.00	753	169	492	568
185.17	33.5	32.8	32.1	-0.73	-1.22	-0.75	A	999.9	9999	0.00	555	128	482	538
185.18	32.8	32.3	31.9	-0.53	-0.73	-0.46	A	999.9	9999	0.00	347	81	476	513
185.19	30.9	30.8	30.7	-0.07	-0.04	-0.21	D	999.9	9999	0.00	58	12	467	485
185.20	29.6	29.6	29.6	0.05	0.22	-0.09	E	999.9	9999	0.00	2	0	471	473
185.21	28.4	28.2	28.5	0.12	0.29	-0.07	E	999.9	9999	0.00	0	0	458	463
185.22	26.2	26.1	25.9	-0.18	-0.20	-0.28	D	999.9	9999	0.00	0	0	463	449
185.23	22.3	22.3	22.3	-0.02	0.16	-0.08	E	999.9	9999	0.00	0	0	435	430

DAILY SUMMARIES

3 METER TEMP --- AVG = 27.4 MAX = 34.1 MIN = 21.8 AVG DEW POINT = 999.9 TOTAL PRCP = 0.00

10 METER WINDS -- AVG SPEED = 6.4 AVG DIR = 159 PEAK SPEED = 16.0 , OCCURRED DURING HOUR 16

NUMBER OF HOURS PER STABILITY CLASS A = 9 , B = 2, C = 0, D = 4, E = 9, F = 0, G = 0

WIPP METEOROLOGICAL DATA DAILY SUMMARY FOR 1/16/78

JULIAN DAY.HR	3 METER WIND DIR	SPD	PEAK SPD	TURB INT	10 METER WIND DIR	SPD	PEAK SPD	TURB INT	30 METER WIND DIR	SPD	PEAK SPD	TURB INT	BAROM PRESS
16. 0	269	5.3	9.5	0.16	267	6.8	11.1	0.16	267	8.5	12.2	0.14	887.6
16. 1	270	3.7	6.4	0.23	268	5.0	7.6	0.22	266	6.8	9.8	0.17	887.3
16. 2	280	4.8	7.1	0.15	277	6.2	8.5	0.14	275	8.0	9.9	0.10	887.9
16. 3	259	4.8	7.9	0.15	257	6.3	9.8	0.13	257	8.0	11.2	0.11	887.7
16. 4	267	4.1	6.0	0.10	264	5.4	7.8	0.09	263	7.1	9.4	0.06	887.9
16. 5	268	4.9	7.9	0.13	266	6.4	10.0	0.11	265	8.2	11.3	0.09	887.9
16. 6	266	3.3	5.3	0.15	265	4.7	6.3	0.14	266	6.6	8.3	0.11	888.7
16. 7	258	1.7	5.6	0.36	255	2.9	6.9	0.27	256	4.8	8.5	0.17	889.9
16. 8	342	1.8	3.6	0.40	327	2.9	4.6	0.25	311	3.9	6.1	0.20	891.3
16. 9	319	3.4	5.1	0.19	315	4.4	6.2	0.17	311	5.1	6.6	0.17	892.6
16.10	329	3.4	4.9	0.31	325	4.2	5.8	0.28	323	4.8	6.5	0.27	893.4
16.11	3	6.7	11.2	0.36	358	8.5	13.4	0.34	357	9.7	15.1	0.34	894.5
16.12	51	6.4	8.5	0.16	47	7.7	10.3	0.15	46	8.5	10.8	0.15	895.0
16.13	56	7.1	9.7	0.14	52	8.4	11.2	0.11	53	9.3	11.7	0.11	894.2
16.14	56	6.7	9.6	0.15	51	8.0	10.7	0.12	51	8.9	11.4	0.12	893.9
16.15	64	5.8	8.7	0.19	59	7.0	10.1	0.16	60	7.6	10.7	0.15	894.2
16.16	70	5.1	7.4	0.17	64	6.2	8.5	0.14	66	6.9	9.4	0.13	894.8
16.17	73	4.2	6.4	0.17	68	5.2	7.9	0.15	69	5.9	8.0	0.14	896.0
16.18	87	2.9	5.1	0.16	82	4.0	6.7	0.15	83	5.1	7.4	0.10	896.7
16.19	104	2.7	4.8	0.16	102	3.7	6.4	0.18	100	5.3	7.5	0.14	897.1
16.20	107	3.6	5.7	0.12	105	4.6	7.0	0.13	103	6.3	8.2	0.10	897.9
16.21	112	3.4	6.3	0.14	110	3.9	7.2	0.13	109	6.2	8.3	0.12	897.8
16.22	118	3.1	5.8	0.12	115	3.0	6.7	0.10	114	6.3	8.7	0.09	897.8
16.23	114	3.4	6.2	0.10	112	3.7	7.2	0.09	111	6.4	9.7	0.08	897.8

JULIAN DAY.HR	TEMPERATURES 3 M	10 M	30 M	DELTA TEMPS 10-3	30-3	30-10	STAB CLASS	DEW POINT	REL HUM	PRCP	RADIATION PARAMETERS SW SKY	SW REF	LW SKY	LW REF
16. 0	999.9	999.9	999.9	99.99	99.99	99.99		999.9	9999	0.00	0	0	319	344
16. 1	999.9	999.9	999.9	99.99	99.99	99.99		999.9	9999	0.00	0	0	292	337
16. 2	999.9	999.9	999.9	99.99	99.99	99.99		999.9	9999	0.00	0	0	327	343
16. 3	999.9	999.9	999.9	99.99	99.99	99.99		999.9	9999	0.00	0	0	319	343
16. 4	999.9	999.9	999.9	99.99	99.99	99.99		999.9	9999	0.00	0	0	309	338
16. 5	999.9	999.9	999.9	99.99	99.99	99.99		999.9	9999	0.00	0	0	289	336
16. 6	999.9	999.9	999.9	99.99	99.99	99.99		999.9	9999	0.00	0	0	252	324
16. 7	999.9	999.9	999.9	99.99	99.99	99.99		999.9	9999	0.00	0	0	247	314
16. 8	999.9	999.9	999.9	99.99	99.99	99.99		999.9	9999	0.00	60	14	254	320
16. 9	999.9	999.9	999.9	99.99	99.99	99.99		999.9	9999	0.00	249	61	259	346
16.10	999.9	999.9	999.9	99.99	99.99	99.99		999.9	9999	0.00	433	105	264	372
16.11	999.9	999.9	999.9	99.99	99.99	99.99		999.9	9999	0.00	568	137	263	385
16.12	999.9	999.9	999.9	99.99	99.99	99.99		999.9	9999	0.00	631	152	252	380
16.13	999.9	999.9	999.9	99.99	99.99	99.99		999.9	9999	0.00	636	154	251	378
16.14	999.9	999.9	999.9	99.99	99.99	99.99		999.9	9999	0.00	575	139	249	374
16.15	999.9	999.9	999.9	99.99	99.99	99.99		999.9	9999	0.00	445	109	247	365
16.16	999.9	999.9	999.9	99.99	99.99	99.99		999.9	9999	0.00	257	63	244	348
16.17	999.9	999.9	999.9	99.99	99.99	99.99		999.9	9999	0.00	79	16	246	327
16.18	3.2	3.2	3.2	-0.06	-0.00	0.02	E	-8.5	45	0.00	0	0	233	306
16.19	1.6	1.6	1.6	-0.00	0.05	0.02	E	-9.1	47	0.00	0	0	241	299
16.20	0.8	0.7	0.6	-0.04	-0.11	-0.11	D	-9.6	47	0.00	0	0	258	298
16.21	0.3	0.3	0.1	-0.03	-0.12	-0.14	D	-9.9	47	0.00	0	0	268	297
16.22	-0.3	-0.3	-0.4	-0.00	-0.10	-0.14	D	-10.7	46	0.00	0	0	263	295
16.23	-0.8	-0.9	-1.0	-0.02	-0.13	-0.15	D	-11.5	45	0.00	0	0	264	292

========== DAILY SUMMARIES ==========

3 METER TEMP --- AVG = 0.8 MAX = 3.2 MIN = -0.8 AVG DEW POINT = -9.9 TOTAL PRCP = 0.00

10 METER WINDS -- AVG SPEED = 1.4 AVG DIR = 11 PEAK SPEED = 13.4 , OCCURRED DURING HOUR 11

NUMBER OF HOURS PER STABILITY CLASS A = 0 , B = 0, C = 0, D = [illegible]

WIPP METEOROLOGICAL DATA DAILY SUMMARY FOR 1/ 5476

JULIAN DAY.HR	3 METER WIND DIR	SPD	PEAK SPD	TURB INT	10 METER WIND DIR	SPD	PEAK SPD	TURB INT	30 METER WIND DIR	SPD	PEAK SPD	TURB INT	BAROM PRESS
5. 0	68	1.5	2.7	0.20	123	0.7	2.0	1.01	229	1.4	2.7	0.37	896.3
5. 1	88	0.7	1.8	0.65	180	1.1	2.1	0.49	222	1.7	2.5	0.20	896.4
5. 2	112	0.6	1.1	0.42	171	2.3	3.1	0.20	214	2.4	3.5	0.19	896.6
5. 3	105	0.7	1.6	0.54	161	2.0	2.7	0.23	198	2.3	3.2	0.31	896.5
5. 4	251	0.8	3.8	1.11	263	2.7	6.2	0.39	272	5.9	9.4	0.19	896.5
5. 5	270	2.0	4.7	0.55	268	3.9	6.8	0.46	274	7.0	10.3	0.29	896.5
5. 6	144	1.1	2.0	0.32	181	1.9	2.8	0.87	225	2.6	4.8	0.27	896.9
5. 7	78	1.0	2.3	0.92	161	1.0	3.0	0.56	223	1.7	3.8	0.33	897.5
5. 8	46	0.4	1.8	0.60	267	0.9	1.7	0.33	257	2.8	3.9	0.18	898.3
5. 9	213	2.0	3.8	0.22	220	2.8	4.7	0.20	233	4.4	6.1	0.23	898.9
5.10	266	4.4	6.6	0.22	264	5.6	8.1	0.21	265	6.3	8.6	0.17	899.4
5.11	275	5.4	7.8	0.21	272	6.9	9.1	0.19	271	7.6	9.6	0.16	898.8
5.12	270	6.0	9.4	0.20	268	7.5	12.0	0.19	267	8.3	12.0	0.17	897.5
5.13	261	5.4	7.9	0.30	259	6.7	9.7	0.29	261	7.4	9.9	0.27	896.2
5.14	231	3.2	5.4	0.43	229	4.0	6.9	0.38	231	4.4	6.7	0.30	896.0
5.15	247	3.1	5.8	0.42	246	3.9	7.0	0.38	248	4.3	7.5	0.32	896.1
5.16	273	3.2	5.8	0.28	270	4.1	7.4	0.26	270	4.5	7.4	0.23	896.1
5.17	290	2.7	4.7	0.19	287	3.8	6.4	0.15	285	4.7	6.5	0.12	896.4
5.18	295	2.1	4.1	0.23	288	4.1	6.1	0.11	282	6.1	9.0	0.09	896.6
5.19	291	1.3	3.9	1.05	284	2.6	5.5	0.74	279	3.9	8.4	0.45	897.1
5.20	183	1.0	3.5	0.97	198	2.1	5.8	0.82	212	3.1	6.6	0.67	897.2
5.21	150	1.2	2.6	0.46	182	2.3	4.0	0.47	211	3.0	4.8	0.37	897.4
5.22	94	1.2	2.8	0.28	149	1.6	2.4	0.18	180	1.6	2.7	0.43	897.8
5.23	101	1.3	2.2	0.19	131	0.7	2.8	0.12	161	1.1	1.6	0.24	897.6

JULIAN DAY.HR	TEMPERATURES 3 M	10 M	30 M	DELTA TEMPS 10-3	30-3	30-10	STAB CLASS	DEW POINT	REL HUM	PRCP	RADIATION PARAMETERS SW SKY	SW REF	LW SKY	LW REF
5. 0	2.2	10.2	11.4	8.00	8.97	1.24	G	-5.9	55	0.00	0	0	248	293
5. 1	3.7	9.2	10.2	5.53	6.53	0.97	G	-5.3	50	0.00	0	0	254	295
5. 2	3.7	8.0	9.9	4.36	6.23	1.84	G	-5.7	52	0.00	0	0	243	289
5. 3	4.3	8.2	9.3	3.89	4.98	1.06	G	-5.1	47	0.00	0	0	250	291
5. 4	7.1	9.5	12.3	2.40	5.21	2.79	G	-2.4	41	0.00	0	0	272	301
5. 5	8.3	9.4	12.4	1.27	4.07	2.78	G	-4.9	49	0.00	0	0	264	316
5. 6	5.4	7.8	9.2	2.44	3.88	1.41	G	-5.0	50	0.00	0	0	256	298
5. 7	3.5	7.6	8.8	4.18	5.35	1.14	G	-5.8	54	0.00	0	0	252	293
5. 8	4.7	7.9	9.3	3.23	4.66	1.40	G	-3.9	49	0.00	25	4	254	298
5. 9	9.3	9.7	10.7	0.36	1.40	1.02	G	-0.9	41	0.00	233	59	266	340
5.10	14.3	14.1	13.8	-0.18	-0.46	-0.31	C	-1.4	32	0.00	402	99	279	382
5.11	16.7	16.3	15.9	-0.36	-0.81	-0.47	A	-1.5	27	0.00	581	135	289	412
5.12	18.9	18.4	17.8	-0.51	-1.11	-0.63	A	-2.8	22	0.00	611	150	296	432
5.13	19.7	19.2	18.5	-0.54	-1.19	-0.67	A	-3.1	21	0.00	610	149	299	441
5.14	20.1	19.6	19.2	-0.47	-0.90	-0.45	A	-3.1	21	0.00	503	122	297	441
5.15	20.4	19.9	19.5	-0.43	-0.86	-0.45	A	-3.0	20	0.00	411	100	296	434
5.16	20.4	20.1	19.8	-0.28	-0.60	-0.35	B	-3.3	20	0.00	236	56	294	415
5.17	18.9	19.1	19.1	0.19	0.19	-0.02	E	-3.5	25	0.00	53	11	286	366
5.18	15.0	16.6	17.9	1.60	2.87	1.24	G	-3.2	29	0.00	0	0	275	354
5.19	14.1	15.4	16.3	1.23	2.18	0.93	G	-3.5	32	0.00	0	0	271	348
5.20	10.9	13.1	14.9	2.17	4.02	1.82	G	-3.7	37	0.00	0	0	263	330
5.21	8.6	11.7	12.7	3.02	4.10	1.05	G	-3.8	42	0.00	0	0	257	316
5.22	6.0	10.9	11.5	4.90	5.55	0.62	F	-4.5	46	0.00	0	0	253	308
5.23	6.0	10.6	11.4	4.60	5.40	0.77	F	-4.4	52	0.00	0	0	252	303

DAILY SUMMARIES

3 METER TEMP ... AVG = 10.9 MAX = 20.4 MIN = 2.2 AVG DEW POINT = -3.7 TOTAL PRCP = 0.00

10 METER WINDS .. AVG SPEED = 2.4 AVG DIR = 249 PEAK SPEED = 12.0 , OCCURRED DURING HOUR 12

NUMBER OF HOURS PER STABILITY CLASS A = 5, B = 1, C = 1, D = 0, E = 1, F = 2, G = 14

WIPP METEOROLOGICAL DATA DAILY SUMMARY FOR 1/ 6/78

JULIAN DAY.HR	3 METER WIND DIR	SPD	PEAK SPD	TURB INT	10 METER WIND DIR	SPD	PEAK SPD	TURB INT	30 METER WIND DIR	SPD	PEAK SPD	TURB INT	BAROM PRESS
6. 0	85	1.1	1.6	0.45	138	1.8	2.9	0.12	204	0.8	1.2	0.25	896.9
6. 1	66	1.2	1.9	0.22	130	0.3	1.6	1.22	305	1.1	2.4	0.61	896.6
6. 2	49	2.1	2.6	0.08	19	2.7	3.7	0.22	5	3.3	4.3	0.25	896.3
6. 3	43	2.6	3.3	0.08	34	4.7	5.6	0.06	11	4.9	5.5	0.04	895.7
6. 4	51	2.3	3.2	0.12	46	4.2	5.5	0.08	16	4.7	5.7	0.06	895.2
6. 5	62	1.7	2.2	0.16	52	3.0	3.6	0.09	8	3.0	4.8	0.10	894.6
6. 6	62	0.6	1.9	0.79	28	1.0	2.9	0.79	340	2.3	3.8	0.35	894.6
6. 7	149	0.6	1.4	0.46	180	1.6	2.6	0.39	206	1.6	2.6	0.34	894.5
6. 8	116	0.6	1.9	0.96	179	1.5	3.0	0.25	223	2.0	3.1	0.18	895.0
6. 9	166	0.9	2.2	0.60	177	1.7	2.6	0.29	214	2.0	3.1	0.26	895.4
6.10	270	1.9	5.0	0.58	268	2.4	6.2	0.54	269	2.7	6.0	0.42	895.6
6.11	250	3.5	5.2	0.27	249	4.4	6.3	0.24	250	4.6	6.6	0.19	894.2
6.12	241	3.8	6.0	0.27	239	4.8	7.3	0.24	239	5.1	7.4	0.20	892.7
6.13	243	4.8	8.3	0.32	241	6.1	10.0	0.28	241	6.5	10.4	0.24	891.1
6.14	253	5.0	7.9	0.24	250	6.3	9.8	0.23	250	6.8	10.1	0.20	890.4
6.15	232	3.8	6.3	0.36	230	4.7	8.0	0.35	232	5.1	8.2	0.33	890.0
6.16	242	3.5	5.8	0.27	241	4.6	7.5	0.24	242	5.2	7.4	0.21	889.9
6.17	272	3.3	6.1	0.32	268	4.7	8.7	0.30	265	6.2	9.8	0.28	889.7
6.18	285	3.3	5.7	0.16	282	4.9	7.8	0.13	279	6.3	10.0	0.10	889.9
6.19	249	3.1	5.6	0.37	248	4.8	7.0	0.33	252	6.7	9.1	0.25	890.4
6.20	257	3.7	5.2	0.28	254	5.8	7.7	0.26	253	8.3	10.4	0.20	890.6
6.21	289	3.6	6.6	0.25	288	5.3	8.4	0.23	287	7.3	11.1	0.22	891.2
6.22	340	2.1	3.6	0.38	329	3.5	5.7	0.27	319	5.1	8.7	0.15	891.5
6.23	356	2.0	2.9	0.41	342	3.6	4.8	0.35	328	4.6	5.9	0.24	890.9

JULIAN DAY.HR	TEMPERATURES 3 M	10 M	30 M	DELTA TEMPS 10-3	30-3	30-10	STAB CLASS	DEW POINT	REL HUM	PRCP	RADIATION PARAMETERS SW SKY	SW REF	LW SKY	LW REF
6. 0	4.0	10.1	11.6	6.09	7.55	1.42	G	-4.2	52	0.00	0	0	250	298
6. 1	3.0	10.3	11.7	7.22	8.55	1.41	G	-6.6	56	0.00	0	0	257	301
6. 2	2.8	10.7	11.4	7.85	8.58	0.73	F	-5.4	56	0.00	0	0	252	297
6. 3	3.2	7.8	10.8	4.67	7.63	2.92	G	-4.4	54	0.00	0	0	251	299
6. 4	4.2	6.4	10.2	2.19	6.00	3.79	G	-4.6	52	0.00	0	0	273	304
6. 5	4.9	8.1	10.5	3.15	5.54	2.36	G	-4.6	56	0.00	0	0	286	307
6. 6	4.6	7.2	9.2	2.60	4.58	1.98	G	-4.6	51	0.00	0	0	292	308
6. 7	4.5	6.4	7.7	1.87	3.19	1.29	G	-4.5	51	0.00	0	0	289	307
6. 8	4.5	7.9	9.6	3.36	5.14	1.78	G	-3.9	50	0.00	32	6	255	304
6. 9	8.3	9.3	10.3	0.99	2.01	0.99	G	-1.4	41	0.00	168	41	269	338
6.10	13.7	13.5	13.3	-0.16	-0.40	-0.26	D	-1.2	32	0.00	397	97	277	383
6.11	15.6	15.2	14.8	-0.40	-0.80	-0.43	A	-1.2	31	0.00	542	131	280	410
6.12	17.3	16.7	16.1	-0.55	-1.11	-0.58	A	-1.9	25	0.00	617	150	287	431
6.13	19.0	18.4	17.8	-0.65	-1.24	-0.62	A	-3.3	21	0.00	632	154	292	441
6.14	19.8	19.2	18.6	-0.63	-1.18	-0.57	A	-3.2	20	0.00	568	137	294	441
6.15	20.6	20.1	19.6	-0.52	-1.01	-0.51	A	-4.2	18	0.00	424	105	294	434
6.16	20.3	20.1	19.9	-0.16	-0.40	-0.27	D	-4.6	19	0.00	181	41	289	409
6.17	18.6	18.8	19.0	0.19	0.43	0.21	E	-4.1	23	0.00	46	9	288	385
6.18	16.5	17.0	17.4	0.47	0.87	0.38	F	-4.0	24	0.00	0	0	281	366
6.19	15.0	15.6	16.3	0.61	1.33	0.70	F	-2.8	30	0.00	0	0	272	357
6.20	13.5	14.2	15.5	0.70	2.08	1.35	G	-2.5	32	0.00	0	0	270	350
6.21	13.4	14.0	14.6	0.55	1.21	0.65	F	-3.0	38	0.00	0	0	271	349
6.22	11.4	13.2	14.2	1.73	2.77	1.01	G	-4.5	34	0.00	0	0	267	336
6.23	10.4	12.7	13.5	2.27	3.14	0.84	G	-3.9	38	0.00	0	0	274	330

DAILY SUMMARIES

3 METER TEMP --- AVG = 11.2 MAX = 20.6 MIN = 2.8 AVG DEW POINT = -3.7 TOTAL PRCP = 0.00

10 METER WINDS -- AVG SPEED = 1.9 AVG DIR = 266 PEAK SPEED = 10.0 , OCCURRED DURING HOUR 13

NUMBER OF HOURS PER STABILITY CLASS A = 5 , B = 0, C = 0, D = 2, E = 1, F = 4, G = 12

WIPP METEOROLOGICAL DATA DAILY SUMMARY FOR 1/ 7/78

JULIAN DAY.HR	3 METER WIND DIR	SPD	PEAK SPD	TURB INT	10 METER WIND DIR	SPD	PEAK SPD	TURB INT	30 METER WIND DIR	SPD	PEAK SPD	TURB INT	BAROM PRESS
7. 0	28	1.4	2.9	0.20	4	2.8	4.7	0.18	339	3.7	6.3	0.24	890.6
7. 1	313	0.8	1.9	0.82	293	2.0	3.7	0.30	283	3.3	5.0	0.13	890.4
7. 2	331	1.3	3.9	0.84	323	2.6	5.9	0.59	316	3.4	5.5	0.41	890.6
7. 3	24	0.9	2.4	0.65	353	1.6	3.2	0.46	338	2.0	3.6	0.37	890.8
7. 4	66	0.4	2.1	0.99	247	0.3	2.0	1.89	291	0.6	2.3	0.90	890.9
7. 5	355	0.5	2.2	1.05	275	1.5	4.4	0.90	275	2.4	4.7	0.65	891.5
7. 6	352	1.8	5.4	0.46	342	3.5	7.1	0.27	338	4.4	8.5	0.22	892.2
7. 7	340	1.9	4.8	0.45	335	3.2	6.8	0.37	335	4.2	8.7	0.31	892.6
7. 8	2	4.2	6.1	0.15	356	5.8	7.6	0.12	352	7.3	9.1	0.11	893.7
7. 9	359	6.0	9.4	0.17	353	7.9	11.8	0.15	351	9.0	13.4	0.18	895.3
7.10	350	7.5	10.3	0.15	345	10.0	13.3	0.13	343	11.3	14.2	0.12	896.1
7.11	342	6.9	9.4	0.17	338	9.2	12.3	0.14	336	10.3	13.2	0.13	896.3
7.12	348	6.3	9.1	0.18	343	8.4	11.7	0.16	341	9.1	12.4	0.16	896.0
7.13	1	5.5	8.2	0.24	356	7.1	10.0	0.21	354	7.6	11.1	0.19	895.4
7.14	356	4.4	7.6	0.27	351	5.7	9.1	0.22	349	6.1	9.2	0.20	895.3
7.15	341	4.4	7.4	0.31	337	5.8	9.5	0.28	335	6.3	9.6	0.28	895.6
7.16	349	4.3	7.4	0.28	344	5.6	8.8	0.25	342	6.3	9.2	0.24	895.9
7.17	4	3.4	5.8	0.16	359	4.7	7.4	0.14	357	5.5	8.1	0.13	896.6
7.18	45	1.7	2.4	0.28	26	3.0	3.8	0.21	14	4.2	5.4	0.11	897.0
7.19	61	2.1	2.5	0.07	50	3.7	4.3	0.10	30	4.1	4.9	0.06	897.4
7.20	67	1.3	2.4	0.12	68	3.0	4.9	0.18	38	3.0	4.3	0.13	897.9
7.21	57	1.7	2.3	0.19	50	2.7	3.8	0.09	28	2.8	3.9	0.13	898.9
7.22	26	1.0	2.3	0.48	19	2.4	4.2	0.47	10	3.1	5.4	0.45	900.0
7.23	42	1.9	3.2	0.14	28	3.4	5.7	0.32	11	3.8	6.9	0.42	900.7

JULIAN DAY.HR	TEMPERATURES 3 M	10 M	30 M	DELTA TEMPS 10-3	30-3	30-10	STAB CLASS	DEW POINT	REL HUM	PRCP	RADIATION PARAMETERS SW SKY	SW REF	LW SKY	LW REF
7. 0	9.6	11.5	12.8	1.87	3.13	1.23	G	-3.7	38	0.00	0	0	295	331
7. 1	10.3	12.1	12.9	1.72	2.54	0.79	F	-3.5	38	0.00	0	0	297	328
7. 2	10.0	11.7	12.5	1.77	2.55	0.78	F	-2.7	44	0.00	0	0	275	327
7. 3	8.9	11.3	11.7	2.47	2.84	0.33	F	-3.1	45	0.00	0	0	261	313
7. 4	6.8	10.5	11.1	3.70	4.25	0.51	F	-4.9	50	0.00	0	0	262	306
7. 5	5.2	7.9	10.2	2.67	4.95	2.25	G	-4.7	51	0.00	0	0	257	301
7. 6	6.1	8.3	9.7	2.13	3.60	1.45	G	-3.2	48	0.00	0	0	255	309
7. 7	6.9	7.9	8.3	0.93	1.39	0.44	F	-3.6	45	0.00	0	0	249	310
7. 8	7.5	7.7	7.8	0.20	0.36	0.14	E	-3.5	43	0.00	59	14	247	322
7. 9	9.3	9.2	9.0	-0.13	-0.32	-0.22	D	-6.5	30	0.00	248	63	241	345
7.10	11.0	10.6	10.2	-0.36	-0.75	-0.42	A	-8.1	24	0.00	433	109	245	365
7.11	11.9	11.4	10.8	-0.57	-1.10	-0.56	A	-7.3	25	0.00	560	139	254	384
7.12	12.9	12.2	11.7	-0.70	-1.26	-0.59	A	-8.4	21	0.00	631	156	257	401
7.13	13.5	12.8	12.2	-0.68	-1.21	-0.56	A	-8.8	20	0.00	652	156	259	410
7.14	14.1	13.4	13.0	-0.68	-1.15	-0.50	A	-9.6	18	0.00	545	139	260	413
7.15	14.5	13.9	13.4	-0.58	-1.05	-0.50	A	-10.4	17	0.00	489	107	259	402
7.16	14.4	14.1	13.7	-0.37	-0.70	-0.37	B	-11.3	16	0.00	253	63	254	365
7.17	13.3	13.4	13.3	0.03	-0.02	-0.08	E	-12.5	17	0.00	66	18	247	350
7.18	8.0	11.3	12.3	3.34	4.36	0.99	G	-13.7	25	0.00	0	0	236	326
7.19	4.2	10.0	11.8	5.72	7.51	1.78	G	-13.5	27	0.00	0	0	231	309
7.20	3.3	7.0	11.0	3.66	7.71	4.02	G	-14.1	30	0.00	0	0	229	294
7.21	2.1	8.5	10.8	6.44	8.70	2.24	G	-13.9	30	0.00	0	0	229	289
7.22	1.4	6.1	8.9	4.67	7.54	2.84	G	-13.2	34	0.00	0	0	227	286
7.23	0.6	5.2	7.0	4.59	6.34	1.78	G	-14.3	38	0.00	0	0	223	284

********** DAILY SUMMARIES **********

3 METER TEMP --- AVG = 8.6 MAX = 14.5 MIN = 0.6 AVG DEW POINT = -8.3 TOTAL PRCP = 0.00

10 METER WINDS -- AVG SPEED = 4.0 AVG DIR = 308 PEAK SPEED = 13.3 , OCCURRED DURING HOUR 10

NUMBER OF HOURS PER STABILITY CLASS A = 6 , B = 1, C = 0, D = 1, E = 8, F = 5, G = 9

WIPP METEOROLOGICAL DATA DAILY SUMMARY FOR 1/ 8/78

JULIAN DAY.HR	3 METER WIND DIR	SPD	PEAK SPD	TURB INT	10 METER WIND DIR	SPD	PEAK SPD	TURB INT	30 METER WIND DIR	SPD	PEAK SPD	TURB INT	BAROM PRESS
8. 0	49	2.1	2.8	0.21	46	4.0	5.4	0.14	34	5.2	6.3	0.07	900.9
8. 1	49	2.0	3.1	0.13	41	4.0	4.9	0.13	23	5.7	6.8	0.10	901.1
8. 2	53	1.5	2.3	0.13	42	2.7	3.9	0.09	7	3.9	5.2	0.13	901.8
8. 3	61	0.8	2.0	0.41	44	1.7	3.4	0.15	19	2.7	3.9	0.13	902.4
8. 4	151	0.2	1.0	1.89	93	0.7	2.3	0.94	55	2.2	3.5	0.35	902.9
8. 5	47	0.1	1.7	2.98	196	0.5	2.1	0.71	331	0.3	1.8	1.78	903.7
8. 6	51	0.6	1.7	0.52	329	0.3	1.1	1.71	350	1.0	2.6	0.84	904.5
8. 7	90	0.5	1.8	1.07	269	0.3	1.6	1.51	304	1.7	2.6	0.34	905.2
8. 8	34	0.8	2.1	0.29	360	1.3	2.7	0.58	334	2.9	4.1	0.43	905.9
8. 9	284	0.5	1.3	0.99	295	0.5	1.6	1.12	322	0.5	2.1	0.99	906.6
8.10	50	1.4	3.7	0.49	47	1.8	4.1	0.46	48	1.8	4.1	0.38	906.6
8.11	106	1.3	3.8	0.68	103	1.7	4.0	0.59	103	2.0	4.1	0.76	906.6
8.12	161	1.4	3.9	0.60	161	1.8	5.0	0.50	160	1.9	4.6	0.45	905.9
8.13	148	1.4	4.2	0.87	148	1.9	4.9	0.66	146	2.1	5.0	0.58	904.4
8.14	179	3.9	7.3	0.25	178	4.7	8.3	0.23	180	4.9	8.6	0.24	904.1
8.15	184	4.4	7.1	0.27	183	5.5	8.6	0.24	183	5.6	8.9	0.23	903.8
8.16	180	4.3	6.8	0.18	179	5.3	7.8	0.17	181	5.5	7.6	0.16	903.4
8.17	169	3.9	5.5	0.11	168	5.1	6.8	0.10	168	5.5	6.9	0.10	903.3
8.18	152	1.8	3.6	0.20	152	3.6	4.8	0.17	158	5.3	6.5	0.09	902.9
8.19	135	1.7	3.1	0.11	138	3.5	5.3	0.08	149	6.5	7.2	0.04	902.9
8.20	140	2.2	3.3	0.11	140	3.9	5.4	0.09	143	6.7	7.9	0.08	902.8
8.21	130	2.4	3.6	0.09	131	2.9	5.2	0.06	133	7.8	8.9	0.04	902.9
8.22	133	2.9	4.2	0.09	133	3.9	6.1	0.06	133	8.0	9.6	0.04	903.0
8.23	133	3.5	5.0	0.10	133	4.4	7.3	0.07	131	8.6	9.9	0.07	902.9

JULIAN DAY.HR	TEMPERATURES 3 M	10 M	30 M	DELTA TEMPS 10-3	30-3	30-10	STAB CLASS	DEW POINT	REL HUM	PRCP	RADIATION PARAMETERS SW SKY	SW REF	LW SKY	LW REF
8. 0	0.4	3.8	6.3	3.38	5.93	2.51	G	-13.5	35	0.00	0	0	228	285
8. 1	-0.3	2.3	5.7	2.63	6.06	3.40	G	-12.7	41	0.00	0	0	226	284
8. 2	-1.7	2.4	4.9	4.06	6.61	2.52	G	-11.5	47	0.00	0	0	226	277
8. 3	-1.0	1.7	3.5	2.62	4.45	1.79	G	-11.5	49	0.00	0	0	224	273
8. 4	-2.1	0.1	2.2	2.23	4.38	2.12	G	-10.2	53	0.00	0	0	225	270
8. 5	-2.3	0.0	2.2	2.32	4.45	2.10	G	-12.6	48	0.00	0	0	224	269
8. 6	-3.4	-0.1	1.1	3.33	4.50	1.14	G	-11.4	48	0.00	0	0	223	267
8. 7	-4.8	-1.3	-0.6	3.56	4.27	0.67	F	-13.0	52	0.00	0	0	220	264
8. 8	-3.3	-2.1	-0.7	1.18	2.53	1.32	G	-10.3	48	0.00	60	15	224	278
8. 9	1.5	1.5	1.5	-0.03	-0.02	-0.02	E	-6.7	48	0.00	239	50	234	316
8.10	5.5	5.2	5.0	-0.26	-0.47	-0.23	D	-3.3	44	0.00	414	99	244	351
8.11	8.5	8.2	7.8	-0.35	-0.76	-0.44	A	-3.3	40	0.00	547	129	255	385
8.12	9.7	9.3	8.9	-0.39	-0.79	-0.43	A	-3.5	37	0.00	612	144	260	402
8.13	10.5	10.0	9.6	-0.48	-0.90	-0.45	A	-3.5	36	0.00	612	144	263	410
8.14	11.5	11.0	10.4	-0.56	-1.12	-0.59	A	-3.7	35	0.00	549	132	262	401
8.15	11.5	10.9	10.4	-0.58	-1.08	-0.53	A	-3.9	34	0.00	421	104	260	386
8.16	11.0	10.6	10.2	-0.43	-0.84	-0.44	A	-4.1	35	0.00	248	61	256	367
8.17	10.1	10.0	9.7	-0.13	-0.34	-0.23	D	-4.3	39	0.00	66	15	250	346
8.18	6.9	7.6	8.4	0.69	1.54	0.82	G	-5.2	48	0.00	0	0	240	321
8.19	4.5	5.3	7.1	0.83	2.56	1.70	G	-5.4	50	0.00	0	0	235	309
8.20	4.1	4.7	5.9	0.59	1.74	1.12	G	-5.2	51	0.00	0	0	233	306
8.21	3.9	4.3	5.1	0.40	1.19	0.76	F	-5.0	52	0.00	0	0	232	305
8.22	3.8	4.2	4.6	0.34	0.81	0.44	F	-5.2	52	0.00	0	0	231	304
8.23	3.5	3.7	4.0	0.27	0.57	0.27	E	-5.6	53	0.00	0	0	229	302

DAILY SUMMARIES

3 METER TEMP --- AVG = 3.7 MAX = 11.5 MIN = -4.8 AVG DEW POINT = -7.3 TOTAL PRCP = 0.00

10 METER WINDS -- AVG SPEED = 1.7 AVG DIR = 135 PEAK SPEED = 8.6 , OCCURRED DURING HOUR 15

NUMBER OF HOURS PER STABILITY CLASS A = 6 , B = 0, C = 0, D = 2, E = 2, F = 3, G = 11

WIPP METEOROLOGICAL DATA DAILY SUMMARY FOR 1/ 9/78

JULIAN DAY.HR	3 METER WIND DIR	SPD	PEAK SPD	TURB INT	10 METER WIND DIR	SPD	PEAK SPD	TURB INT	30 METER WIND DIR	SPD	PEAK SPD	TURB INT	BAROM PRESS
9. 0	122	3.5	4.8	0.08	122	2.8	4.2	0.07	122	8.6	10.7	0.05	902.7
9. 1	115	4.0	6.2	0.11	114	4.5	9.2	0.10	114	8.7	11.1	0.09	902.2
9. 2	109	5.6	8.5	0.08	109	7.3	12.4	0.07	107	10.6	13.8	0.06	901.9
9. 3	109	5.6	8.8	0.08	110	7.3	11.5	0.06	108	10.5	13.8	0.05	901.7
9. 4	104	5.5	9.0	0.09	105	7.5	12.1	0.08	104	9.5	12.6	0.06	901.4
9. 5	106	4.8	6.7	0.08	106	6.8	11.0	0.07	104	8.8	11.3	0.05	900.9
9. 6	109	3.8	6.8	0.12	109	5.0	8.8	0.09	107	7.4	10.5	0.07	900.9
9. 7	106	3.6	6.2	0.12	106	4.9	8.0	0.11	105	7.1	9.4	0.08	900.7
9. 8	109	3.3	4.9	0.11	108	4.2	6.8	0.10	107	6.4	7.9	0.09	900.7
9. 9	127	3.0	4.9	0.26	129	2.9	6.2	0.27	125	5.2	7.1	0.20	900.4
9.10	164	3.4	5.1	0.23	162	4.2	5.9	0.20	163	4.4	6.2	0.17	899.7
9.11	170	3.2	5.1	0.24	169	3.8	5.7	0.20	168	3.9	5.4	0.18	898.5
9.12	164	2.0	4.3	0.43	162	2.5	4.7	0.37	163	2.6	4.4	0.34	897.0
9.13	155	1.9	3.8	0.31	155	2.4	4.8	0.25	152	2.6	4.5	0.25	895.7
9.14	174	2.8	4.7	0.38	172	3.4	5.3	0.34	173	3.5	5.0	0.30	894.8
9.15	194	3.4	5.5	0.20	192	4.2	6.3	0.18	192	4.3	6.3	0.17	894.5
9.16	178	3.8	5.5	0.13	177	4.9	6.8	0.12	177	5.3	6.8	0.12	894.2
9.17	157	3.0	4.7	0.13	156	4.3	6.0	0.12	155	5.1	6.4	0.12	894.2
9.18	150	2.0	3.2	0.10	147	3.7	5.3	0.08	143	5.5	7.5	0.08	894.1
9.19	144	2.3	3.5	0.09	140	3.9	5.2	0.07	137	6.9	8.4	0.06	894.2
9.20	132	1.9	3.1	0.13	132	2.8	5.1	0.10	131	7.1	8.6	0.08	894.5
9.21	135	1.4	4.4	0.50	132	2.1	4.5	0.34	123	4.8	7.1	0.16	894.9
9.22	106	5.4	9.5	0.11	105	7.2	12.8	0.12	104	9.9	13.9	0.10	894.8
9.23	97	7.1	10.7	0.08	95	9.9	13.6	0.09	94	11.5	14.3	0.05	895.2

JULIAN DAY.HR	TEMPERATURES 3 M	10 M	30 M	DELTA TEMPS 10-3	30-3	30-10	STAB CLASS	DEW POINT	REL HUM	PRCP	RADIATION PARAMETERS SW SKY	SW REF	LW SKY	LW REF
9. 0	2.0	2.1	2.3	0.17	0.35	0.15	E	-6.8	55	0.00	0	0	223	297
9. 1	0.2	0.3	0.4	0.10	0.23	0.10	E	-8.1	59	0.00	0	0	218	290
9. 2	-1.9	-1.9	-1.9	0.02	0.08	0.03	E	-11.0	52	0.00	0	0	212	282
9. 3	-3.0	-2.9	-2.9	0.03	0.10	0.05	E	-12.6	50	0.00	0	0	209	277
9. 4	-4.5	-4.5	-4.5	-0.04	-0.03	-0.01	E	-14.0	49	0.00	0	0	205	271
9. 5	-5.8	-5.8	-5.8	-0.04	-0.01	0.00	E	-15.4	48	0.00	0	0	202	266
9. 6	-6.5	-6.5	-6.4	0.00	0.09	0.05	E	-16.3	47	0.00	0	0	199	263
9. 7	-7.2	-7.2	-7.2	-0.02	0.05	0.05	E	-16.9	46	0.00	0	0	198	261
9. 8	-7.0	-7.1	-7.2	-0.12	-0.19	-0.09	E	-15.8	45	0.00	64	16	201	266
9. 9	-4.2	-4.5	-4.8	-0.36	-0.60	-0.27	D	-12.6	43	0.00	254	66	207	288
9.10	-0.1	-0.5	-0.9	-0.42	-0.85	-0.46	A	-10.0	42	0.00	441	111	215	320
9.11	2.9	2.4	2.0	-0.45	-0.90	-0.47	A	-10.0	34	0.00	589	146	226	351
9.12	5.8	5.4	4.9	-0.44	-0.87	-0.46	A	-10.1	27	0.00	644	157	245	382
9.13	8.8	8.4	8.0	-0.40	-0.87	-0.50	A	-9.3	24	0.00	548	131	257	392
9.14	12.0	11.5	11.1	-0.47	-0.93	-0.49	A	-9.4	20	0.00	546	138	275	404
9.15	13.5	13.2	12.9	-0.31	-0.63	-0.35	B	-10.5	17	0.00	273	63	276	388
9.16	13.3	13.2	13.0	-0.09	-0.29	-0.22	D	-10.2	20	0.00	124	27	275	360
9.17	11.0	11.2	11.2	0.11	0.13	-0.00	E	-9.9	24	0.00	43	8	258	346
9.18	7.3	8.1	8.9	0.73	1.54	0.79	F	-8.9	33	0.00	0	0	233	318
9.19	5.5	6.1	7.4	0.61	1.89	1.25	G	-7.7	38	0.00	0	0	229	309
9.20	5.4	6.0	7.1	0.54	1.70	1.13	G	-7.6	38	0.00	0	0	229	308
9.21	4.9	5.5	6.1	0.62	1.25	0.61	F	-7.6	39	0.00	0	0	230	302
9.22	4.0	4.1	4.2	0.11	0.27	0.14	E	-10.4	40	0.00	0	0	226	303
9.23	-0.0	-0.2	-0.2	-0.11	-0.12	-0.04	E	-13.4	38	0.00	0	0	220	288

DAILY SUMMARIES

3 METER TEMP --- AVG = 2.8 MAX = 13.5 MIN = -7.2 AVG DEW POINT = -11.0 TOTAL PRCP = 0.00

10 METER WINDS -- AVG SPEED = 4.1 AVG DIR = 126 PEAK SPEED = 13.6 , OCCURRED DURING HOUR 23

NUMBER OF HOURS PER STABILITY CLASS A = 5 , B = 1, C = 0, D = 2, E = 12, F = 2, G = 2

WIPP METEOROLOGICAL DATA DAILY SUMMARY FOR 1/10/78

JULIAN DAY.HR	3 METER WIND DIR	SPD	PEAK SPD	TURB INT	10 METER WIND DIR	SPD	PEAK SPD	TURB INT	30 METER WIND DIR	SPD	PEAK SPD	TURB INT	BAROM PRESS
10. 0	96	7.5	10.9	0.07	93	10.5	13.7	0.08	94	12.0	14.3	0.05	895.7
10. 1	92	7.2	9.9	0.09	88	10.0	13.2	0.09	90	11.4	13.6	0.06	895.8
10. 2	86	7.3	9.7	0.09	81	9.9	13.4	0.08	84	11.3	13.9	0.06	896.3
10. 3	81	7.7	10.5	0.09	77	10.2	12.8	0.07	79	11.5	13.7	0.05	896.7
10. 4	71	6.8	10.4	0.12	68	8.7	12.8	0.11	70	9.8	13.7	0.09	897.8
10. 5	68	5.3	7.8	0.14	65	6.9	10.3	0.12	68	7.8	11.1	0.10	898.5
10. 6	71	5.4	8.2	0.13	68	7.0	10.4	0.11	70	7.9	10.5	0.10	899.3
10. 7	67	3.3	5.1	0.17	65	4.2	6.3	0.14	67	4.8	7.4	0.12	899.8
10. 8	79	4.0	6.6	0.15	76	5.3	7.7	0.13	77	6.0	8.5	0.11	900.4
10. 9	89	4.5	7.0	0.14	85	5.9	8.6	0.15	86	6.4	8.4	0.11	900.9
10.10	91	3.7	5.8	0.19	88	4.9	7.6	0.19	89	5.1	7.0	0.15	901.2
10.11	109	3.0	5.3	0.22	106	3.5	6.9	0.22	106	4.4	999.9	0.46	900.9
10.12	124	2.3	4.4	0.34	122	2.6	5.2	0.35	120	3.7	5.3	0.25	899.4
10.13	126	2.0	3.9	0.46	125	2.3	4.9	0.47	125	3.0	4.9	0.33	898.2
10.14	141	2.1	4.3	0.37	140	2.6	5.2	0.35	136	3.1	5.1	0.31	897.8
10.15	138	2.1	4.3	0.36	138	2.6	5.8	0.34	133	3.3	5.3	0.30	897.6
10.16	136	2.7	4.5	0.19	137	3.2	6.4	0.17	133	4.7	6.4	0.15	897.6
10.17	137	2.8	5.2	0.21	139	3.4	6.7	0.17	135	5.1	7.1	0.16	897.1
10.18	134	2.1	3.9	0.20	135	2.7	5.4	0.17	132	4.1	5.8	0.16	897.5
10.19	113	2.0	4.4	0.13	112	2.3	5.8	0.10	112	3.9	6.7	0.09	897.6
10.20	112	3.0	5.2	0.11	111	3.4	6.5	0.08	110	5.6	7.3	0.08	897.6
10.21	118	2.8	4.1	0.10	118	2.4	5.3	0.10	117	5.5	7.0	0.07	898.2
10.22	119	2.8	4.5	0.12	118	2.5	4.9	0.11	117	5.7	7.7	0.09	898.6
10.23	116	2.9	5.3	0.10	116	2.8	5.7	0.08	115	5.9	7.7	0.08	898.5

JULIAN DAY.HR	TEMPERATURES 3 M	10 M	30 M	DELTA TEMPS 10-3	30-3	30-10	STAB CLASS	DEW POINT	REL HUM	PRCP	RADIATION PARAMETERS SW SKY	SW REF	LW SKY	LW REF
10. 0	-1.5	-1.6	-1.6	-0.13	-0.17	-0.06	E	-14.5	38	0.00	0	0	226	284
10. 1	-3.0	-3.1	-3.2	-0.13	-0.19	-0.08	E	-16.6	36	0.00	0	0	222	278
10. 2	-4.7	-4.8	-4.9	-0.10	-0.19	-0.12	D	-18.5	35	0.00	0	0	226	273
10. 3	-6.0	-6.1	-6.2	-0.09	-0.22	-0.16	D	-19.8	34	0.00	0	0	234	270
10. 4	-7.0	-7.0	-7.2	-0.07	-0.22	-0.17	D	-20.5	34	0.00	0	0	233	267
10. 5	-7.4	-7.5	-7.7	-0.08	-0.24	-0.18	D	-20.8	34	0.00	0	0	237	266
10. 6	-7.9	-8.0	-8.1	-0.09	-0.26	-0.20	D	-21.0	34	0.00	0	0	239	265
10. 7	-8.2	-8.2	-8.4	-0.08	-0.24	-0.18	D	-20.8	36	0.00	0	0	231	263
10. 8	-8.0	-8.2	-8.4	-0.16	-0.36	-0.22	D	-19.9	36	0.00	36	8	232	266
10. 9	-6.8	-7.2	-7.6	-0.43	-0.76	-0.35	B	-18.6	37	0.00	156	36	228	277
10.10	-5.2	-5.7	-6.1	-0.57	-0.99	-0.44	A	-17.3	35	0.00	306	72	234	295
10.11	-3.9	-4.4	-4.9	-0.57	-1.01	-0.46	A	-16.3	35	0.00	335	78	232	305
10.12	-2.8	-3.3	-3.7	-0.49	-0.94	-0.47	A	-15.0	37	0.00	361	83	242	316
10.13	-1.8	-2.3	-2.7	-0.52	-0.99	-0.50	A	-14.3	38	0.00	499	117	250	337
10.14	-1.1	-1.6	-2.1	-0.49	-0.92	-0.46	A	-12.8	38	0.00	368	85	254	331
10.15	-0.1	-0.6	-1.0	-0.50	-0.87	-0.40	A	-13.3	37	0.00	271	61	247	327
10.16	-0.2	-0.5	-0.8	-0.33	-0.64	-0.33	C	-12.2	41	0.00	100	21	266	311
10.17	-0.8	-0.9	-1.2	-0.18	-0.42	-0.27	D	-11.6	45	0.00	28	5	260	299
10.18	-1.5	-1.5	-1.7	-0.06	-0.21	-0.18	D	-11.1	49	0.00	0	0	260	292
10.19	-1.8	-1.9	-2.1	-0.08	-0.24	-0.19	D	-11.1	50	0.00	0	0	265	290
10.20	-2.7	-2.8	-3.0	-0.10	-0.26	-0.20	D	-10.2	58	0.00	0	0	259	286
10.21	-3.4	-3.5	-3.7	-0.10	-0.29	-0.22	D	-9.8	62	0.00	0	0	270	285
10.22	-3.8	-3.8	-4.0	-0.11	-0.30	-0.22	D	-9.6	65	0.00	0	0	270	284
10.23	-4.2	-4.3	-4.4	-0.07	-0.22	-0.18	D	-8.9	70	0.00	0	0	254	280

========== DAILY SUMMARIES ==========

3 METER TEMP --- AVG = -3.9 MAX = -0.1 MIN = -8.2 AVG DEW POINT = -15.2 TOTAL PRCP = 0.00

10 METER WINDS -- AVG SPEED = 4.6 AVG DIR = 92 PEAK SPEED = 13.7 , OCCURRED DURING HOUR 0

NUMBER OF HOURS PER STABILITY CLASS A = 6 , B = 1, C = 1, D = 14, E = 2, F = 0, G = 0

WIPP METEOROLOGICAL DATA DAILY SUMMARY FOR 1/11/78

JULIAN DAY.HR	3 METER WIND DIR	SPD	PEAK SPD	TURB INT	10 METER WIND DIR	SPD	PEAK SPD	TURB INT	30 METER WIND DIR	SPD	PEAK SPD	TURB INT	BAROM PRESS
11. 0	110	3.2	5.8	0.18	108	3.8	8.1	0.16	110	5.7	7.9	0.17	898.2
11. 1	121	2.5	3.9	0.15	122	2.1	4.9	0.18	121	5.0	6.4	0.12	898.2
11. 2	122	2.3	3.7	0.13	123	2.0	3.6	0.13	121	4.9	6.6	0.09	897.9
11. 3	129	2.8	5.3	0.16	132	2.9	6.5	0.18	128	5.8	8.4	0.10	897.9
11. 4	134	2.6	4.9	0.15	135	3.2	7.1	0.12	132	5.1	7.0	0.11	897.5
11. 5	126	1.6	3.3	0.17	127	1.5	4.2	0.20	125	3.3	5.3	0.12	896.5
11. 6	148	2.4	3.9	0.19	147	3.3	5.5	0.17	145	3.9	6.2	0.17	897.3
11. 7	140	2.1	3.8	0.27	142	2.5	4.9	0.22	137	3.6	5.2	0.25	897.3
11. 8	157	2.9	4.5	0.21	156	3.9	5.5	0.19	155	4.1	5.6	0.19	897.6
11. 9	155	2.4	4.5	0.20	155	3.1	5.6	0.18	154	3.3	5.5	0.16	897.8
11.10	173	2.8	4.4	0.26	173	3.4	5.1	0.24	173	3.4	5.0	0.20	898.0
11.11	177	2.7	4.6	0.33	176	3.3	5.1	0.30	176	3.3	5.3	0.29	897.1
11.12	191	2.2	4.4	0.36	189	2.7	4.7	0.32	188	2.8	4.5	0.26	895.6
11.13	196	2.0	4.3	0.44	194	2.4	5.4	0.36	196	2.4	4.1	0.32	894.6
11.14	201	2.2	4.7	0.38	200	2.7	5.2	0.32	202	2.9	5.4	0.28	893.8
11.15	212	2.8	4.1	0.29	210	3.5	5.3	0.24	211	3.6	5.4	0.21	893.5
11.16	197	2.8	4.6	0.25	195	3.6	5.2	0.22	196	3.7	5.2	0.22	893.5
11.17	164	2.3	3.7	0.15	165	3.2	4.7	0.11	170	3.4	4.4	0.13	893.5
11.18	165	1.9	4.2	0.16	167	3.3	5.5	0.18	171	4.6	6.1	0.20	893.8
11.19	153	1.7	2.9	0.22	151	3.2	5.2	0.17	158	5.0	6.3	0.11	894.3
11.20	153	1.2	2.5	0.27	151	2.4	4.7	0.22	158	3.9	6.0	0.11	895.0
11.21	138	0.9	1.7	0.21	138	2.1	4.2	0.10	161	3.9	4.8	0.10	895.5
11.22	137	1.8	2.4	0.16	141	3.5	4.9	0.13	165	4.8	5.9	0.18	895.7
11.23	129	1.3	2.4	0.24	137	3.0	4.8	0.09	171	3.8	5.3	0.09	895.7

JULIAN DAY.HR	TEMPERATURES 3 M	10 M	30 M	DELTA TEMPS 10-3	30-3	30-10	STAB CLASS	DEW POINT	REL HUM	PRCP	RADIATION PARAMETERS SW SKY	SW REF	LW SKY	LW REF
11. 0	-4.3	-4.5	-4.6	-0.17	-0.35	-0.21	D	-8.6	74	0.00	0	0	277	282
11. 1	-4.6	-4.7	-4.9	-0.12	-0.29	-0.20	D	-8.4	75	0.00	0	0	279	282
11. 2	-4.7	-4.8	-4.9	-0.13	-0.28	-0.19	D	-8.2	77	0.00	0	0	279	282
11. 3	-4.9	-4.9	-5.1	-0.11	-0.21	-0.13	D	-8.2	78	0.00	0	0	279	281
11. 4	-5.1	-5.2	-5.3	-0.11	-0.21	-0.13	D	-8.9	74	0.00	0	0	278	280
11. 5	-5.0	-5.1	-5.3	-0.11	-0.30	-0.22	D	-9.2	73	0.00	0	0	276	279
11. 6	-4.8	-4.9	-5.1	-0.11	-0.26	-0.18	D	-8.8	74	0.00	0	0	278	280
11. 7	-4.8	-4.9	-5.1	-0.12	-0.28	-0.19	D	-8.5	77	0.00	0	0	279	281
11. 8	-4.9	-5.0	-5.1	-0.12	-0.24	-0.15	D	-7.7	80	0.00	5	1	280	281
11. 9	-4.5	-4.6	-4.7	-0.11	-0.20	-0.12	D	-7.1	80	0.00	30	4	284	285
11.10	-3.6	-3.8	-4.0	-0.21	-0.35	-0.17	D	-6.5	76	0.00	114	23	288	294
11.11	-1.5	-2.0	-2.5	-0.42	-0.93	-0.53	A	-5.2	68	0.00	389	94	278	323
11.12	0.3	-0.1	-0.5	-0.37	-0.76	-0.42	A	-4.7	64	0.00	390	89	273	338
11.13	2.9	2.6	2.2	-0.33	-0.72	-0.43	A	-3.3	59	0.00	546	128	274	367
11.14	6.5	6.1	5.6	-0.39	-0.85	-0.48	A	-1.3	51	0.00	528	126	261	379
11.15	8.3	7.9	7.5	-0.39	-0.74	-0.38	A	-1.6	50	0.00	254	56	277	365
11.16	9.4	9.1	8.7	-0.33	-0.64	-0.34	B	-1.4	47	0.00	210	51	266	356
11.17	8.7	8.7	8.6	-0.00	-0.08	-0.11	D	-2.1	50	0.00	63	13	258	339
11.18	6.2	6.8	7.4	0.64	1.27	0.60	F	-3.3	57	0.00	0	0	251	317
11.19	3.6	4.1	5.1	0.53	1.52	0.95	G	-3.5	61	0.00	0	0	251	306
11.20	2.9	3.5	4.4	0.60	1.48	0.85	G	-4.0	64	0.00	0	0	243	299
11.21	1.5	2.3	4.6	0.81	3.05	2.21	G	-4.4	65	0.00	0	0	239	291
11.22	1.2	2.3	5.0	1.14	3.85	2.68	G	-4.6	66	0.00	0	0	238	293
11.23	0.9	2.2	5.6	1.24	4.70	3.43	G	-4.4	66	0.00	0	0	236	289

========== DAILY SUMMARIES ==========

3 METER TEMP --- AVG = -0.0 MAX = 9.4 MIN = -5.1 AVG DEW POINT = -5.6 TOTAL PRCP = 0.00

10 METER WINDS -- AVG SPEED = 2.6 AVG DIR = 157 PEAK SPEED = 8.1 , OCCURRED DURING HOUR 0

NUMBER OF HOURS PER STABILITY CLASS A = 5 , B = 1, C = 0, D = 12, E = 0, F = 1, G = 5

WIPP METEOROLOGICAL DATA DAILY SUMMARY FOR 1/12/78

JULIAN DAY.HR	3 METER WIND DIR	SPD	PEAK SPD	TURB INT	10 METER WIND DIR	SPD	PEAK SPD	TURB INT	30 METER WIND DIR	SPD	PEAK SPD	TURB INT	BAROM PRESS
12. 0	115	0.9	1.6	0.49	145	2.3	4.1	0.18	177	2.4	3.8	0.25	895.3
12. 1	137	1.1	1.9	0.38	160	3.1	4.1	0.21	194	3.2	4.6	0.16	895.3
12. 2	115	1.0	1.8	0.60	156	2.4	4.1	0.36	189	3.0	4.8	0.24	895.3
12. 3	121	0.7	1.4	0.35	157	2.7	3.4	0.12	191	2.6	3.2	0.13	894.9
12. 4	81	0.6	1.8	0.81	152	1.0	3.1	0.51	209	1.3	3.2	0.74	894.7
12. 5	130	0.6	1.6	1.09	189	1.7	2.7	0.42	232	2.0	3.4	0.38	894.7
12. 6	119	0.8	2.5	1.53	194	1.3	3.3	0.51	243	2.4	4.1	0.25	894.9
12. 7	138	0.4	1.5	1.30	218	1.0	2.3	0.31	254	2.1	2.9	0.21	894.8
12. 8	183	1.0	1.8	0.43	223	1.8	2.3	0.25	252	3.0	3.7	0.11	894.9
12. 9	259	2.6	5.0	0.23	258	3.3	6.7	0.19	260	4.0	6.4	0.14	895.6
12.10	287	4.8	8.3	0.22	286	6.2	10.4	0.21	284	6.9	10.8	0.20	896.0
12.11	9999	999.9	999.9	99.99	9999	999.9	999.9	99.99	9999	999.9	999.9	99.99	9999.0
12.12	9999	999.9	999.9	99.99	9999	999.9	999.9	99.99	9999	999.9	999.9	99.99	9999.0
12.13	9999	999.9	999.9	99.99	9999	999.9	999.9	99.99	9999	999.9	999.9	99.99	9999.0
12.14	9999	999.9	999.9	99.99	9999	999.9	999.9	99.99	9999	999.9	999.9	99.99	9999.0
12.15	9999	999.9	999.9	99.99	9999	999.9	999.9	99.99	9999	999.9	999.9	99.99	9999.0
12.16	9999	999.9	999.9	99.99	9999	999.9	999.9	99.99	9999	999.9	999.9	99.99	9999.0
12.17	9999	999.9	999.9	99.99	9999	999.9	999.9	99.99	9999	999.9	999.9	99.99	9999.0
12.18	9999	999.9	999.9	99.99	9999	999.9	999.9	99.99	9999	999.9	999.9	99.99	9999.0
12.19	337	1.4	3.4	0.21	322	3.0	4.8	0.11	322	5.1	7.1	0.06	895.0
12.20	344	1.6	2.4	0.15	332	3.1	3.9	0.15	325	5.4	6.4	0.13	896.0
12.21	1	1.4	2.6	0.45	332	2.7	3.5	0.36	312	4.5	6.1	0.18	896.7
12.22	22	1.5	2.3	0.31	347	2.4	3.0	0.27	323	3.7	5.0	0.15	897.4
12.23	345	0.8	2.1	1.05	325	2.2	3.5	0.48	317	4.3	5.5	0.15	897.8

JULIAN DAY.HR	TEMPERATURES 3 M	10 M	30 M	DELTA TEMPS 10-3	30-3	30-10	STAB CLASS	DEW POINT	REL HUM	PRCP	RADIATION PARAMETERS SW SKY	SW REF	LW SKY	LW REF
12. 0	1.1	4.9	6.0	3.78	4.90	1.08	G	-4.7	67	0.00	0	0	238	285
12. 1	0.9	4.2	5.9	3.27	5.04	1.73	G	-4.6	66	0.00	0	0	236	284
12. 2	0.6	4.0	5.5	3.31	4.87	1.52	G	-4.7	68	0.00	0	0	236	281
12. 3	0.5	4.6	5.6	4.07	5.17	1.05	G	-4.8	69	0.00	0	0	236	279
12. 4	-0.6	2.7	4.1	3.19	4.65	1.42	G	-6.7	70	0.00	0	0	233	276
12. 5	-1.6	2.3	3.5	3.92	5.10	1.14	G	-5.7	70	0.00	0	0	231	273
12. 6	-1.2	2.0	3.3	3.17	4.51	1.29	G	-7.2	66	0.00	0	0	231	273
12. 7	-0.5	2.5	3.3	2.98	3.78	0.76	F	-6.0	69	0.00	0	0	230	273
12. 8	0.8	2.8	3.5	1.93	2.66	0.70	F	-2.5	67	0.00	61	15	236	286
12. 9	5.3	5.2	5.2	-0.11	-0.13	-0.06	E	-1.2	54	0.00	225	61	246	324
12.10	10.0	9.8	9.4	-0.27	-0.59	-0.36	B	-2.9	35	0.00	412	105	260	362
12.11	999.9	999.9	999.9	99.99	99.99	99.99		999.9	9999	99.99	9999	9999	9999	9999
12.12	999.9	999.9	999.9	99.99	99.99	99.99		999.9	9999	99.99	9999	9999	9999	9999
12.13	999.9	999.9	999.9	99.99	99.99	99.99		999.9	9999	99.99	9999	9999	9999	9999
12.14	999.9	999.9	999.9	99.99	99.99	99.99		999.9	9999	99.99	9999	9999	9999	9999
12.15	999.9	999.9	999.9	99.99	99.99	99.99		999.9	9999	99.99	9999	9999	9999	9999
12.16	999.9	999.9	999.9	99.99	99.99	99.99		999.9	9999	99.99	9999	9999	9999	9999
12.17	999.9	999.9	999.9	99.99	99.99	99.99		999.9	9999	99.99	9999	9999	9999	9999
12.18	999.9	999.9	999.9	99.99	99.99	99.99		999.9	9999	99.99	9999	9999	9999	9999
12.19	8.4	10.3	11.9	1.88	3.47	1.55	G	-20.6	11	0.00	0	0	250	318
12.20	6.9	8.5	9.9	1.58	2.96	1.34	G	-21.6	12	0.00	0	0	246	311
12.21	5.2	7.5	9.0	2.25	3.76	1.48	G	-23.0	12	0.00	0	0	241	302
12.22	4.3	7.1	8.0	2.86	3.78	0.88	G	-23.1	11	0.00	0	0	240	296
12.23	3.9	5.9	7.6	2.00	3.77	1.74	G	-24.2	12	0.00	0	0	237	293

========== DAILY SUMMARIES ==========

3 METER TEMP --- AVG = 2.8 MAX = 10.0 MIN = -1.6 AVG DEW POINT = -10.2 TOTAL PRCP = 0.00

10 METER WINDS -- AVG SPEED = 0.8 AVG DIR = 259 PEAK SPEED = 10.4 , OCCURRED DURING HOUR 10

NUMBER OF HOURS PER STABILITY CLASS A = 0 , B = 1, C = 0, D = 0, E = 1, F = 2, G = 12

WIPP METEOROLOGICAL DATA DAILY SUMMARY FOR 1/13/78

JULIAN DAY.HR	3 METER WIND DIR	SPD	PEAK SPD	TURB INT	10 METER WIND DIR	SPD	PEAK SPD	TURB INT	30 METER WIND DIR	SPD	PEAK SPD	TURB INT	BAROM PRESS
13. 0	26	0.9	1.9	0.44	335	1.7	2.6	0.31	318	3.9	5.0	0.11	897.8
13. 1	13	1.1	2.3	0.45	328	2.0	3.3	0.23	309	3.8	4.9	0.12	897.8
13. 2	339	1.7	2.3	0.16	328	3.6	4.6	0.08	319	5.5	6.9	0.05	897.8
13. 3	6	1.6	2.2	0.40	340	3.2	4.5	0.24	325	5.2	6.9	0.13	898.2
13. 4	13	2.2	3.5	0.24	358	3.7	5.2	0.15	348	5.2	6.7	0.09	898.2
13. 5	3	3.3	5.4	0.15	355	4.8	6.5	0.12	351	6.4	8.4	0.10	898.5
13. 6	26	2.2	3.8	0.17	13	3.9	5.4	0.16	360	5.7	7.3	0.13	899.4
13. 7	22	2.0	3.3	0.31	4	3.6	5.1	0.20	350	5.0	6.4	0.10	899.8
13. 8	57	0.3	2.9	1.80	7	1.2	5.0	0.44	358	3.2	7.2	0.20	900.4
13. 9	20	2.4	5.0	0.29	12	3.1	6.3	0.28	6	3.5	6.8	0.22	900.7
13.10	349	4.9	8.4	0.19	344	6.6	10.7	0.16	343	7.5	999.9	0.23	901.1
13.11	351	6.7	8.6	0.13	347	8.4	10.3	0.11	345	9.5	11.3	0.10	900.5
13.12	1	5.4	7.9	0.23	355	6.6	9.2	0.21	353	7.3	10.4	0.56	900.1
13.13	356	4.5	6.8	0.23	351	5.5	8.4	0.20	349	6.1	9.1	0.18	899.1
13.14	339	3.7	6.2	0.39	334	4.5	7.2	0.34	333	5.1	7.8	0.31	898.9
13.15	352	3.8	6.1	0.29	346	4.7	7.4	0.24	344	5.2	7.8	0.22	898.7
13.16	360	3.5	6.0	0.29	355	4.3	6.7	0.27	353	4.8	7.3	0.26	898.7
13.17	355	2.7	4.4	0.21	351	3.6	6.1	0.16	349	4.3	6.3	0.15	899.3
13.18	6	1.2	2.0	0.25	352	2.2	2.8	0.11	348	3.5	3.9	0.08	900.0
13.19	83	2.3	3.8	0.29	79	4.2	5.9	0.27	77	6.0	7.7	0.26	900.4
13.20	94	3.3	4.8	0.08	89	5.3	6.6	0.09	90	8.4	9.1	0.08	900.4
13.21	97	3.8	5.1	0.07	94	5.8	7.0	0.08	95	8.6	9.5	0.03	900.1
13.22	104	3.4	5.0	0.11	101	5.1	6.8	0.11	100	8.0	9.0	0.10	900.5
13.23	112	3.3	5.2	0.09	111	3.9	6.6	0.07	112	7.5	9.3	0.05	900.7

JULIAN DAY.HR	TEMPERATURES 3 M	10 M	30 M	DELTA TEMPS 10-3	30-3	30-10	STAB CLASS	DEW POINT	REL HUM	PRCP	RADIATION PARAMETERS SW SKY	SW REF	LW SKY	LW REF
13. 0	3.5	5.3	7.0	1.72	3.52	1.76	G	-24.1	11	0.00	0	0	236	286
13. 1	2.6	5.8	7.2	3.17	4.58	1.37	G	-25.2	10	0.00	0	0	236	285
13. 2	2.9	5.2	6.7	2.29	3.86	1.52	G	-24.8	12	0.00	0	0	233	286
13. 3	1.4	3.4	5.0	2.03	3.63	1.56	G	-25.6	11	0.00	0	0	229	284
13. 4	2.1	4.1	5.0	1.93	2.93	0.96	G	-24.2	11	0.00	0	0	230	288
13. 5	3.9	4.5	5.0	0.59	1.10	0.47	F	-23.4	11	0.00	0	0	230	297
13. 6	1.3	2.6	3.9	1.32	2.61	1.25	G	-26.0	12	0.00	0	0	224	286
13. 7	0.2	2.6	4.1	2.44	4.00	1.52	G	-26.2	11	0.00	0	0	225	281
13. 8	0.3	2.3	3.9	1.98	3.58	1.56	G	-23.5	13	0.00	61	15	230	290
13. 9	5.6	5.6	5.6	-0.02	0.07	0.05	E	-19.1	13	0.00	249	63	238	327
13.10	9.8	9.4	9.1	-0.32	-0.67	-0.38	B	-16.5	13	0.00	437	110	247	341
13.11	11.8	11.2	10.6	-0.57	-1.08	-0.54	A	-16.0	12	0.00	609	154	252	387
13.12	12.4	11.7	11.2	-0.64	-1.16	-0.55	A	-15.3	12	0.00	642	159	257	400
13.13	13.4	12.7	12.2	-0.66	-1.15	-0.52	A	-14.0	13	0.00	645	159	261	413
13.14	999.9	999.9	999.9	99.99	99.99	99.99		999.9	9999	0.00	581	143	263	410
13.15	999.9	999.9	999.9	99.99	99.99	99.99		999.9	9999	0.00	453	113	259	405
13.16	999.9	999.9	999.9	99.99	99.99	99.99		999.9	9999	0.00	272	68	255	387
13.17	999.9	999.9	999.9	99.99	99.99	99.99		999.9	9999	0.00	79	17	249	362
13.18	999.9	999.9	999.9	99.99	99.99	99.99		999.9	9999	0.00	0	0	243	323
13.19	999.9	999.9	999.9	99.99	99.99	99.99		999.9	9999	0.00	0	0	238	311
13.20	999.9	999.9	999.9	99.99	99.99	99.99		999.9	9999	0.00	0	0	236	313
13.21	999.9	999.9	999.9	99.99	99.99	99.99		999.9	9999	0.00	0	0	235	312
13.22	999.9	999.9	999.9	99.99	99.99	99.99		999.9	9999	0.00	0	0	233	308
13.23	999.9	999.9	999.9	99.99	99.99	99.99		999.9	9999	0.00	0	0	230	304

---------- DAILY SUMMARIES ----------

3 METER TEMP --- AVG = 5.1 MAX = 13.4 MIN = 0.2 AVG DEW POINT = -21.7 TOTAL PRCP = 0.00

10 METER WINDS -- AVG SPEED = 3.1 AVG DIR = 9 PEAK SPEED = 10.7 , OCCURRED DURING HOUR 10

NUMBER OF HOURS PER STABILITY CLASS A = 3 , B = 1, C = 0, D = 0, E = 1, F = 1, G = 8

WIPP METEOROLOGICAL DATA DAILY SUMMARY FOR 1/14/78

JULIAN DAY.HR	3 METER WIND DIR	SPD	PEAK SPD	TURB INT	10 METER WIND DIR	SPD	PEAK SPD	TURB INT	30 METER WIND DIR	SPD	PEAK SPD	TURB INT	BAROM PRESS
14. 0	120	2.2	4.6	0.28	122	2.2	5.0	0.35	119	5.6	8.1	0.18	900.7
14. 1	225	0.6	3.3	0.89	231	1.4	4.2	0.44	218	2.6	4.5	0.42	901.1
14. 2	87	1.1	1.8	0.34	144	1.1	2.1	0.32	168	1.6	3.0	0.28	901.2
14. 3	92	1.3	2.3	0.24	118	0.4	1.8	0.14	143	1.9	2.5	0.18	900.9
14. 4	64	1.7	2.1	0.11	108	1.0	2.6	0.23	138	1.8	2.4	0.11	900.8
14. 5	82	1.9	2.6	0.15	95	3.7	4.5	0.18	112	2.8	4.8	0.15	900.5
14. 6	101	2.5	4.1	0.27	103	3.7	5.3	0.22	110	6.9	7.9	0.06	900.5
14. 7	108	3.3	4.6	0.06	109	4.5	6.0	0.05	109	7.5	8.8	0.03	900.4
14. 8	108	4.1	7.8	0.09	108	5.2	8.9	0.08	106	8.2	10.7	0.07	900.8
14. 9	110	4.0	6.8	0.12	109	4.6	8.9	0.11	108	7.0	9.9	0.11	901.0
14.10	131	3.3	5.4	0.17	132	3.3	6.7	0.15	128	6.0	8.0	0.12	901.3
14.11	150	4.5	7.2	0.19	150	5.7	9.0	0.17	148	6.6	9.5	0.18	900.8
14.12	164	4.3	6.7	0.23	162	5.2	8.0	0.20	161	5.6	8.5	0.18	899.3
14.13	167	3.7	5.8	0.26	165	4.4	6.7	0.22	165	4.6	7.6	0.21	897.9
14.14	161	3.8	5.9	0.19	160	4.6	6.8	0.16	159	4.9	7.0	0.16	897.1
14.15	158	3.4	5.2	0.19	157	4.4	6.6	0.16	157	4.8	6.4	0.15	896.4
14.16	165	3.7	5.1	0.16	164	4.6	6.2	0.13	163	5.1	6.7	0.12	896.0
14.17	157	3.4	5.0	0.12	157	4.4	6.0	0.11	156	5.1	6.6	0.10	895.6
14.18	152	2.9	4.6	0.12	151	4.1	5.9	0.10	151	5.2	6.8	0.08	895.2
14.19	148	2.3	3.8	0.10	149	3.7	5.5	0.07	150	5.3	6.8	0.06	895.0
14.20	150	2.7	3.6	0.08	150	4.3	5.4	0.06	155	6.6	7.7	0.04	894.5
14.21	147	2.2	2.9	0.09	147	4.2	5.1	0.07	155	6.6	7.5	0.04	894.2
14.22	144	2.2	3.2	0.08	144	4.3	5.4	0.04	152	7.0	7.7	0.04	893.8
14.23	144	2.5	3.7	0.09	144	4.2	5.5	0.07	147	6.6	7.6	0.05	893.4

JULIAN DAY.HR	TEMPERATURES 3 M	10 M	30 M	DELTA TEMPS 10-3	30-3	30-10	STAB CLASS	DEW POINT	REL HUM	PRCP	RADIATION PARAMETERS SW SKY	SW REF	LW SKY	LW REF
14. 0	999.9	999.9	999.9	99.99	99.99	99.99		999.9	9999	0.00	0	0	227	300
14. 1	999.9	999.9	999.9	99.99	99.99	99.99		999.9	9999	0.00	0	0	227	287
14. 2	999.9	999.9	999.9	99.99	99.99	99.99		999.9	9999	0.00	0	0	228	279
14. 3	999.9	999.9	999.9	99.99	99.99	99.99		999.9	9999	0.00	0	0	225	275
14. 4	999.9	999.9	999.9	99.99	99.99	99.99		999.9	9999	0.00	0	0	222	271
14. 5	999.9	999.9	999.9	99.99	99.99	99.99		999.9	9999	0.00	0	0	223	274
14. 6	999.9	999.9	999.9	99.99	99.99	99.99		999.9	9999	0.00	0	0	230	284
14. 7	999.9	999.9	999.9	99.99	99.99	99.99		999.9	9999	0.00	0	0	229	289
14. 8	999.9	999.9	999.9	99.99	99.99	99.99		999.9	9999	0.00	51	11	229	291
14. 9	999.9	999.9	999.9	99.99	99.99	99.99		999.9	9999	0.00	222	55	232	305
14.10	999.9	999.9	999.9	99.99	99.99	99.99		999.9	9999	0.00	415	103	241	333
14.11	999.9	999.9	999.9	99.99	99.99	99.99		999.9	9999	0.00	515	125	252	360
14.12	999.9	999.9	999.9	99.99	99.99	99.99		999.9	9999	0.00	580	133	255	371
14.13	999.9	999.9	999.9	99.99	99.99	99.99		999.9	9999	0.00	465	110	274	377
14.14	999.9	999.9	999.9	99.99	99.99	99.99		999.9	9999	0.00	269	60	298	370
14.15	999.9	999.9	999.9	99.99	99.99	99.99		999.9	9999	0.00	140	29	308	360
14.16	999.9	999.9	999.9	99.99	99.99	99.99		999.9	9999	0.00	79	15	304	355
14.17	999.9	999.9	999.9	99.99	99.99	99.99		999.9	9999	0.00	21	3	305	345
14.18	999.9	999.9	999.9	99.99	99.99	99.99		999.9	9999	0.00	0	0	292	332
14.19	999.9	999.9	999.9	99.99	99.99	99.99		999.9	9999	0.00	0	0	249	317
14.20	999.9	999.9	999.9	99.99	99.99	99.99		999.9	9999	0.00	0	0	242	310
14.21	999.9	999.9	999.9	99.99	99.99	99.99		999.9	9999	0.00	0	0	230	303
14.22	999.9	999.9	999.9	99.99	99.99	99.99		999.9	9999	0.00	0	0	241	302
14.23	999.9	999.9	999.9	99.99	99.99	99.99		999.9	9999	0.00	0	0	249	304

DAILY SUMMARIES

3 METER TEMP --- AVG = 999.9 MAX = 999.9 MIN = 999.9 AVG DEW POINT = 999.9 TOTAL PRCP = 0.00

10 METER WINDS -- AVG SPEED = 3.4 AVG DIR = 141 PEAK SPEED = 9.0 , OCCURRED DURING HOUR 11

NUMBER OF HOURS PER STABILITY CLASS A = 0 , B = 0, C = 0, D = 0, E = 0, F = 0, G = 0

WIPP METEOROLOGICAL DATA DAILY SUMMARY FOR 1/15/78

JULIAN DAY.HR	3 METER WIND DIR	SPD	PEAK SPD	TURB INT	10 METER WIND DIR	SPD	PEAK SPD	TURB INT	30 METER WIND DIR	SPD	PEAK SPD	TURB INT	BAROM PRESS
15. 0	158	0.4	2.9	1.98	164	1.0	4.6	0.96	150	2.5	6.5	0.30	892.9
15. 1	107	1.3	2.3	0.28	119	0.6	2.4	0.11	133	4.4	6.7	0.06	892.0
15. 2	125	1.9	2.7	0.11	125	1.7	3.5	0.08	135	7.2	8.3	0.06	891.6
15. 3	128	1.4	2.2	0.13	127	1.4	2.8	0.09	134	5.6	6.7	0.07	891.2
15. 4	136	1.8	2.9	0.16	135	2.5	4.3	0.10	137	5.9	6.7	0.07	890.9
15. 5	149	1.8	2.9	0.21	144	2.9	4.3	0.13	146	5.4	6.2	0.07	890.5
15. 6	137	1.8	3.1	0.11	136	2.9	5.1	0.07	147	5.9	6.7	0.08	890.5
15. 7	128	1.5	2.7	0.17	128	1.8	3.9	0.12	139	5.5	6.7	0.09	890.5
15. 8	128	2.1	3.5	0.14	130	2.3	4.6	0.11	135	6.3	7.5	0.10	890.5
15. 9	146	2.7	4.7	0.19	145	3.5	5.6	0.17	147	5.1	6.5	0.15	890.6
15.10	172	2.8	4.1	0.15	171	3.5	5.2	0.13	169	3.9	5.3	0.11	891.0
15.11	181	2.3	3.9	0.24	180	2.8	4.5	0.21	179	3.4	4.8	0.19	890.6
15.12	168	1.9	3.5	0.21	167	2.6	4.0	0.18	169	3.4	5.1	0.14	889.8
15.13	179	1.2	3.2	0.61	176	1.6	4.0	0.51	173	2.4	5.1	0.36	888.3
15.14	163	4.0	5.7	0.11	162	5.2	7.3	0.09	163	6.5	8.6	0.08	887.2
15.15	174	4.0	5.9	0.14	172	5.0	7.4	0.11	172	6.1	8.4	0.10	887.0
15.16	199	2.0	4.7	0.37	199	2.7	5.8	0.33	202	3.6	6.4	0.28	887.2
15.17	164	1.2	2.5	0.15	169	2.2	3.6	0.18	189	3.4	4.8	0.21	887.2
15.18	195	1.2	3.5	0.62	199	2.5	5.2	0.44	216	4.4	8.0	0.17	887.0
15.19	228	3.6	6.5	0.11	226	5.1	8.0	0.10	228	6.5	9.8	0.09	887.2
15.20	246	4.0	6.5	0.16	243	5.4	8.0	0.14	244	7.1	9.7	0.12	887.4
15.21	251	4.4	7.7	0.17	249	5.9	9.6	0.14	248	7.4	11.5	0.12	887.6
15.22	230	4.9	7.7	0.12	227	6.4	9.4	0.10	228	8.1	11.0	0.10	887.7
15.23	243	3.7	10.1	0.29	241	5.0	12.4	0.27	243	6.6	13.7	0.21	887.5

JULIAN DAY.HR	TEMPERATURES 3 M	10 M	30 M	DELTA TEMPS 10-3	30-3	30-10	STAB CLASS	DEW POINT	REL HUM	PRCP	RADIATION PARAMETERS SW SKY	SW REF	LW SKY	LW REF
15. 0	999.9	999.9	999.9	99.99	99.99	99.99		999.9	9999	0.00	0	0	249	298
15. 1	999.9	999.9	999.9	99.99	99.99	99.99		999.9	9999	0.00	0	0	244	292
15. 2	999.9	999.9	999.9	99.99	99.99	99.99		999.9	9999	0.00	0	0	266	304
15. 3	999.9	999.9	999.9	99.99	99.99	99.99		999.9	9999	0.00	0	0	283	307
15. 4	999.9	999.9	999.9	99.99	99.99	99.99		999.9	9999	0.00	0	0	276	307
15. 5	999.9	999.9	999.9	99.99	99.99	99.99		999.9	9999	0.00	0	0	276	305
15. 6	999.9	999.9	999.9	99.99	99.99	99.99		999.9	9999	0.00	0	0	280	306
15. 7	999.9	999.9	999.9	99.99	99.99	99.99		999.9	9999	0.00	0	0	270	304
15. 8	999.9	999.9	999.9	99.99	99.99	99.99		999.9	9999	0.00	40	8	286	312
15. 9	999.9	999.9	999.9	99.99	99.99	99.99		999.9	9999	0.00	111	24	317	335
15.10	999.9	999.9	999.9	99.99	99.99	99.99		999.9	9999	0.00	66	12	327	342
15.11	999.9	999.9	999.9	99.99	99.99	99.99		999.9	9999	0.00	47	7	332	344
15.12	999.9	999.9	999.9	99.99	99.99	99.99		999.9	9999	0.00	40	5	332	340
15.13	999.9	999.9	999.9	99.99	99.99	99.99		999.9	9999	0.00	59	8	331	340
15.14	999.9	999.9	999.9	99.99	99.99	99.99		999.9	9999	0.00	87	14	334	345
15.15	999.9	999.9	999.9	99.99	99.99	99.99		999.9	9999	0.00	62	10	335	348
15.16	999.9	999.9	999.9	99.99	99.99	99.99		999.9	9999	0.00	18	1	334	343
15.17	999.9	999.9	999.9	99.99	99.99	99.99		999.9	9999	0.00	2	0	334	335
15.18	999.9	999.9	999.9	99.99	99.99	99.99		999.9	9999	0.00	0	0	339	335
15.19	999.9	999.9	999.9	99.99	99.99	99.99		999.9	9999	0.00	0	0	346	348
15.20	999.9	999.9	999.9	99.99	99.99	99.99		999.9	9999	0.00	0	0	348	349
15.21	999.9	999.9	999.9	99.99	99.99	99.99		999.9	9999	0.00	0	0	341	349
15.22	999.9	999.9	999.9	99.99	99.99	99.99		999.9	9999	0.00	0	0	332	346
15.23	999.9	999.9	999.9	99.99	99.99	99.99		999.9	9999	0.00	0	0	315	341

DAILY SUMMARIES

3 METER TEMP --- AVG = 999.9 MAX = 999.9 MIN = 999.9 AVG DEW POINT = 999.9 TOTAL PRCP = 0.00

10 METER WINDS -- AVG SPEED = 2.4 AVG DIR = 187 PEAK SPEED = 12.4 , OCCURRED DURING HOUR 23

NUMBER OF HOURS PER STABILITY CLASS A = 0 , B = 0, C = 0, D = 0, E = 0, F = 0, G = 0

WIPP METEOROLOGICAL DATA DAILY SUMMARY FOR 7/ 5/77

JULIAN DAY.HR	3 METER WIND DIR	SPD	PEAK SPD	TURB INT	10 METER WIND DIR	SPD	PEAK SPD	TURB INT	30 METER WIND DIR	SPD	PEAK SPD	TURB INT	BAROM PRESS
186. 0	18	2.5	4.0	99.99	54	3.3	5.0	99.99	9999	4.5	7.0	99.99	897.2
186. 1	158	2.0	4.0	99.99	132	3.6	5.5	99.99	9999	6.0	8.0	99.99	897.1
186. 2	153	1.5	4.0	99.99	132	0.6	6.0	99.99	9999	5.3	8.5	99.99	896.9
186. 3	158	2.5	4.5	99.99	150	4.4	6.0	99.99	9999	5.5	7.5	99.99	897.0
186. 4	178	3.0	4.5	99.99	192	4.1	5.5	99.99	9999	4.8	6.5	99.99	896.9
186. 5	151	1.0	5.0	99.99	168	2.0	4.5	99.99	9999	3.0	6.0	99.99	897.0
186. 6	157	0.8	1.5	99.99	156	1.7	3.0	99.99	9999	3.0	4.5	99.99	897.1
186. 7	151	2.5	4.5	99.99	156	3.5	5.0	99.99	9999	4.0	6.0	99.99	897.2
186. 8	151	2.5	4.5	99.99	174	3.6	5.5	99.99	9999	3.5	5.5	99.99	897.8
186. 9	194	2.0	4.0	99.99	216	3.5	5.0	99.99	9999	2.5	5.5	99.99	9999.0
186.10	162	2.0	3.5	99.99	174	2.0	4.0	99.99	9999	2.5	4.0	99.99	9999.0
186.11	178	2.5	4.5	99.99	192	3.0	5.0	99.99	9999	3.5	5.5	99.99	9999.0
186.12	184	3.0	5.5	99.99	198	2.5	7.0	99.99	9999	3.5	7.0	99.99	9999.0
186.13	173	1.5	6.0	99.99	198	3.0	7.0	99.99	9999	1.5	7.5	99.99	9999.0
186.14	184	4.0	8.0	99.99	204	4.7	8.5	99.99	173	5.0	9.0	99.99	896.8
186.15	157	2.5	7.0	99.99	162	3.9	8.5	99.99	140	4.0	8.5	99.99	896.1
186.16	151	3.0	9.0	99.99	180	4.1	10.0	99.99	189	6.0	9.5	99.99	895.4
186.17	173	4.0	8.5	99.99	180	4.3	8.5	99.99	151	6.5	9.8	99.99	895.2
186.18	157	4.5	7.5	99.99	168	5.8	8.5	99.99	167	6.0	9.5	99.99	894.5
186.19	157	4.0	7.0	99.99	156	5.4	8.0	99.99	154	5.5	9.3	99.99	894.4
186.20	140	2.0	5.5	99.99	150	3.4	6.0	99.99	167	5.3	9.3	99.99	894.6
186.21	135	2.0	3.5	99.99	144	3.7	5.0	99.99	157	7.5	8.8	99.99	895.0
186.22	140	4.0	8.5	99.99	144	6.7	4.5	99.99	162	8.0	11.0	99.99	895.6
186.23	140	4.0	8.0	99.99	150	5.5	10.0	99.99	167	8.5	11.5	99.99	896.4

JULIAN DAY.HR	TEMPERATURES 3 M	10 M	30 M	DELTA TEMPS 10-3	30-3	30-10	STAB CLASS	DEW POINT	REL HUM	PRCP	RADIATION PARAMETERS SW SKY	SW REF	LW SKY	LW REF
186. 0	21.8	21.8	21.9	0.02	0.29	0.00	E	999.9	9999	0.00	0	0	435	427
186. 1	24.0	24.2	24.4	0.26	0.60	0.10	E	999.9	9999	0.00	0	0	445	438
186. 2	23.3	23.5	23.6	0.14	0.53	0.14	E	999.9	9999	0.00	0	0	448	432
186. 3	23.0	23.2	23.3	0.14	0.42	0.04	E	999.9	9999	0.00	0	0	448	432
186. 4	22.5	22.6	22.7	0.12	0.44	0.04	E	999.9	9999	0.00	0	0	445	429
186. 5	20.7	21.4	21.9	0.64	1.30	0.40	F	999.9	9999	0.00	0	0	437	418
186. 6	20.4	20.9	21.2	0.46	1.06	0.33	F	999.9	9999	0.00	16	6	435	418
186. 7	22.4	22.3	22.0	-0.22	-0.27	-0.32	C	999.9	9999	0.00	174	45	446	442
186. 8	23.4	23.2	23.0	-0.13	-0.13	-0.26	D	999.9	9999	0.00	146	32	442	444
186. 9	999.9	999.9	999.9	99.99	99.99	99.99		999.9	9999	99.99	9999	9999	9999	9999
186.10	999.9	999.9	999.9	99.99	99.99	99.99		999.9	9999	99.99	9999	9999	9999	9999
186.11	999.9	999.9	999.9	99.99	99.99	99.99		999.9	9999	99.99	9999	9999	9999	9999
186.12	999.9	999.9	999.9	99.99	99.99	99.99		999.9	9999	99.99	9999	9999	9999	9999
186.13	999.9	999.9	999.9	99.99	99.99	99.99		999.9	9999	99.99	9999	9999	9999	9999
186.14	33.3	32.3	31.7	-1.01	-1.46	-0.72	A	999.9	9999	0.00	977	225	505	608
186.15	34.6	34.0	33.0	-0.70	-1.39	-0.98	A	999.9	9999	0.00	965	213	518	623
186.16	34.2	33.7	33.0	-0.58	-0.99	-0.68	A	999.9	9999	0.00	748	169	488	582
186.17	33.7	33.0	32.5	-0.68	-0.97	-0.56	A	999.9	9999	0.00	223	51	472	532
186.18	34.0	33.4	32.9	-0.62	-0.94	-0.61	A	999.9	9999	0.00	343	80	477	531
186.19	32.4	32.3	32.2	-0.05	0.01	-0.20	D	999.9	9999	0.00	39	6	464	492
186.20	30.1	30.4	30.8	0.30	0.88	0.32	F	999.9	9999	0.00	0	0	458	472
186.21	27.9	28.5	29.1	0.56	1.38	0.56	F	999.9	9999	0.00	0	0	454	461
186.22	28.0	28.2	28.3	0.16	0.47	0.02	E	999.9	9999	0.00	0	0	453	460
186.23	26.7	26.9	27.0	0.21	0.48	0.01	E	999.9	9999	0.00	0	0	446	452

DAILY SUMMARIES

3 METER TEMP --- AVG = 27.2 MAX = 34.6 MIN = 20.4 AVG DEW POINT = 999.9 TOTAL PRCP = 0.00

10 METER WINDS -- AVG SPEED = 3.2 AVG DIR = 166 PEAK SPEED = 10.0 , OCCURRED DURING HOUR 16

NUMBER OF HOURS PER STABILITY CLASS A = 5 , B = 0, C = 1, D = 2, E = 7, F = 4, G = 0

WIPP METEOROLOGICAL DATA DAILY SUMMARY FOR 7/ 6/77

JULIAN DAY.HR	3 METER WIND DIR	SPD	PEAK SPD	TURB INT	10 METER WIND DIR	SPD	PEAK SPD	TURB INT	30 METER WIND DIR	SPD	PEAK SPD	TURB INT	BAROM PRESS
187. 0	157	4.0	6.5	99.99	180	5.0	8.0	99.99	194	5.5	11.0	99.99	896.8
187. 1	157	3.5	5.0	99.99	168	4.9	6.5	99.99	184	7.0	9.3	99.99	897.1
187. 2	140	1.8	5.5	99.99	138	2.9	6.5	99.99	157	5.0	8.8	99.99	897.1
187. 3	135	2.0	3.0	99.99	132	2.8	5.0	99.99	146	6.5	8.5	99.99	896.8
187. 4	124	2.5	3.5	99.99	126	2.3	4.5	99.99	140	7.5	9.0	99.99	896.8
187. 5	130	2.5	4.0	99.99	120	2.7	6.0	99.99	143	6.5	9.8	99.99	896.7
187. 6	135	2.0	4.5	99.99	150	3.6	7.5	99.99	157	5.0	9.5	99.99	896.8
187. 7	135	2.0	4.0	99.99	144	2.9	5.5	99.99	154	4.5	7.5	99.99	897.1
187. 8	151	2.5	5.0	99.99	162	3.1	6.0	99.99	162	3.0	7.3	99.99	897.5
187. 9	162	2.0	5.0	99.99	162	2.1	5.0	99.99	184	2.5	6.0	99.99	897.5
187.10	243	1.0	3.0	99.99	180	1.1	3.0	99.99	59	1.5	4.8	99.99	897.4
187.11	18	1.5	4.0	99.99	60	1.0	3.5	99.99	346	2.5	4.8	99.99	897.2
187.12	248	1.5	4.0	99.99	270	0.8	4.0	99.99	292	1.8	4.5	99.99	896.5
187.13	130	1.5	5.5	99.99	120	2.0	5.5	99.99	140	3.5	6.8	99.99	896.0
187.14	119	3.0	5.5	99.99	144	2.9	6.0	99.99	108	4.5	7.8	99.99	895.0
187.15	108	2.5	5.5	99.99	144	10.5	6.0	99.99	151	6.0	7.5	99.99	894.5
187.16	151	3.0	6.0	99.99	144	2.3	7.0	99.99	146	5.0	7.8	99.99	894.1
187.17	135	4.0	6.5	99.99	144	4.1	9.0	99.99	151	6.5	9.5	99.99	893.5
187.18	135	3.5	7.0	99.99	132	4.2	8.0	99.99	119	5.0	8.5	99.99	893.0
187.19	140	2.0	4.5	99.99	150	2.8	6.5	99.99	162	3.0	9.0	99.99	894.0
187.20	313	2.0	8.0	99.99	312	2.6	9.0	99.99	335	3.5	9.5	99.99	894.6
187.21	324	2.0	4.5	99.99	336	3.0	5.5	99.99	356	4.3	7.0	99.99	894.6
187.22	351	1.5	2.5	99.99	12	3.0	3.0	99.99	10	4.5	5.5	99.99	894.6
187.23	45	1.0	2.0	99.99	72	2.4	3.5	99.99	2	2.0	5.5	99.99	895.1

JULIAN DAY.HR	TEMPERATURES 3 M	10 M	30 M	DELTA TEMPS 10-3	30-3	30-10	STAB CLASS	DEW POINT	REL HUM	PRCP	RADIATION PARAMETERS SW SKY	SW REF	LW SKY	LW REF
187. 0	26.1	26.2	10.2	0.06	0.24	-0.09	E	999.9	9999	0.00	0	0	475	451
187. 1	24.7	24.8	24.9	0.15	0.43	0.02	E	999.9	9999	0.00	0	0	436	440
187. 2	22.8	23.1	23.5	0.29	0.84	0.28	E	999.9	9999	0.00	0	0	427	429
187. 3	22.0	22.3	22.6	0.24	0.76	0.30	E	999.9	9999	0.00	0	0	422	425
187. 4	21.5	21.7	21.9	0.20	0.65	0.21	E	999.9	9999	0.00	0	0	418	422
187. 5	20.9	21.1	21.2	0.19	0.50	0.07	E	999.9	9999	0.00	0	0	415	418
187. 6	20.2	20.3	20.4	0.13	0.42	0.06	E	999.9	9999	0.00	7	0	412	414
187. 7	21.1	20.9	20.7	-0.18	-0.23	-0.29	D	999.9	9999	0.00	147	36	421	431
187. 8	23.6	23.2	22.9	-0.46	-0.54	-0.33	C	999.9	9999	0.00	357	83	439	456
187. 9	25.4	24.8	24.6	-0.61	-0.69	-0.32	C	999.9	9999	0.00	556	127	454	493
187.10	28.1	27.3	26.5	-0.75	-1.33	-0.78	A	999.9	9999	0.00	741	164	461	518
187.11	29.4	29.6	28.6	0.20	-0.63	-1.11	A	999.9	9999	0.00	889	164	484	558
187.12	30.4	30.1	30.0	-0.30	-0.20	-0.16	D	999.9	9999	0.00	1093	208	420	594
187.13	32.7	31.6	31.1	-1.08	-1.41	-0.60	A	999.9	9999	0.00	1142	216	426	613
187.14	33.5	32.6	32.3	-0.44	-1.02	-0.87	A	999.9	9999	0.00	199	34	401	551
187.15	35.3	34.1	33.4	-5.17	-2.38	-0.70	A	999.9	9999	0.00	951	189	410	595
187.16	36.3	35.1	34.2	-1.22	-2.30	-0.94	A	999.9	9999	0.00	827	168	415	599
187.17	35.1	34.3	33.8	-0.79	-1.21	-0.58	A	999.9	9999	0.00	644	131	408	563
187.18	33.2	33.2	33.0	-0.05	-0.16	-0.20	D	999.9	9999	0.00	46	7	412	504
187.19	29.0	28.9	28.7	-0.17	-0.33	-0.25	D	999.9	9999	0.00	29	5	410	476
187.20	28.0	28.1	28.0	0.04	0.04	-0.10	D	999.9	9999	0.00	3	0	399	466
187.21	26.9	27.3	27.8	0.40	0.95	0.46	F	999.9	9999	0.00	0	0	386	455
187.22	24.0	25.5	27.0	1.52	3.11	1.50	G	999.9	9999	0.00	0	0	377	435
187.23	22.4	23.7	26.6	1.36	4.26	-1.16	A	999.9	9999	0.00	0	0	369	426

DAILY SUMMARIES

3 METER TEMP --- AVG = 27.2 MAX = 36.3 MIN = 20.2 AVG DEW POINT = 999.9 TOTAL PRCP = 0.00

10 METER WINDS -- AVG SPEED = 2.2 AVG DIR = 142 PEAK SPEED = 9.0 , OCCURRED DURING HOUR 17

NUMBER OF HOURS PER STABILITY CLASS A = 8 , B = 0, C = 2, D = 5, E = 7, F = 1, G = 1

NIPP METEOROLOGICAL DATA DAILY SUMMARY FOR 7/ 7/77

JULIAN DAY.HR	3 METER WIND DIR	SPD	PEAK SPD	TURB INT	10 METER WIND DIR	SPD	PEAK SPD	TURB INT	30 METER WIND DIR	SPD	PEAK SPD	TURB INT	BAROM PRESS
188. 0	61	0.5	2.0	99.99	114	2.5	3.5	99.99	148	2.8	3.5	99.99	895.3
188. 1	137	2.0	3.5	99.99	114	1.9	3.5	99.99	130	7.0	9.5	99.99	895.1
188. 2	153	2.5	4.5	99.99	120	3.6	4.0	99.99	9999	6.0	9.0	99.99	895.0
188. 3	140	1.5	4.5	99.99	144	2.9	5.5	99.99	9999	4.8	8.5	99.99	895.1
188. 4	151	2.5	4.0	99.99	144	3.8	5.5	99.99	9999	5.0	7.8	99.99	894.9
188. 5	124	1.3	3.0	99.99	156	1.6	5.5	99.99	164	6.5	7.5	99.99	894.7
188. 6	140	1.5	3.0	99.99	126	2.9	5.0	99.99	169	4.8	7.5	99.99	894.9
188. 7	113	2.0	3.0	99.99	138	1.6	4.0	99.99	153	5.5	7.5	99.99	895.3
188. 8	130	3.5	5.0	99.99	120	3.9	4.0	99.99	169	5.5	7.0	99.99	895.4
188. 9	151	4.0	6.0	99.99	138	4.6	6.5	99.99	9999	5.0	7.5	99.99	895.8
188.10	124	2.0	6.0	99.99	162	0.4	7.5	99.99	184	3.0	6.5	99.99	895.8
188.11	146	3.0	5.0	99.99	144	2.4	5.5	99.99	140	4.0	6.3	99.99	895.8
188.12	151	4.0	7.5	99.99	180	3.6	7.5	99.99	167	3.8	8.0	99.99	895.6
188.13	184	3.5	7.5	99.99	180	4.5	8.0	99.99	205	3.5	8.0	99.99	894.9
188.14	119	2.0	7.5	99.99	126	2.6	8.0	99.99	184	2.8	8.5	99.99	894.2
188.15	189	3.5	6.0	99.99	180	1.4	8.5	99.99	140	4.5	8.5	99.99	893.4
188.16	157	4.5	8.0	99.99	162	5.1	8.5	99.99	162	5.3	9.5	99.99	893.0
188.17	130	2.5	6.5	99.99	156	2.3	9.0	99.99	140	6.0	8.5	99.99	892.5
188.18	92	1.5	7.5	99.99	126	2.1	8.0	99.99	119	5.0	9.3	99.99	892.4
188.19	356	4.5	10.5	99.99	54	5.7	13.5	99.99	23	8.0	15.5	99.99	893.8
188.20	335	4.5	6.5	99.99	360	5.9	7.0	99.99	18	8.5	10.5	99.99	894.2
188.21	7	4.0	8.0	99.99	18	4.0	9.5	99.99	45	7.0	11.5	99.99	894.6
188.22	340	1.0	5.5	99.99	360	1.7	7.0	99.99	72	1.8	9.5	99.99	894.9
188.23	135	4.0	5.0	99.99	144	5.6	8.0	99.99	94	7.5	10.5	99.99	894.9

JULIAN DAY.HR	TEMPERATURES 3 M	10 M	30 M	DELTA TEMPS 10-3	30-3	30-10	STAB CLASS	DEW POINT	REL HUM	PRCP	RADIATION PARAMETERS SW SKY	SW REF	LW SKY	LW REF
188. 0	22.4	23.9	26.3	1.41	3.94	2.44	G	999.9	9999	0.00	0	0	366	427
188. 1	23.5	23.8	24.5	0.32	1.01	0.60	F	999.9	9999	0.00	0	0	370	434
188. 2	23.1	23.4	23.8	0.30	0.73	0.33	F	999.9	9999	0.00	0	0	369	431
188. 3	21.5	22.1	22.8	0.58	1.29	0.62	F	999.9	9999	0.00	0	0	363	423
188. 4	21.5	21.9	22.5	0.41	1.05	0.54	F	999.9	9999	0.00	0	0	363	420
188. 5	20.3	20.7	21.5	0.35	1.16	0.69	F	999.9	9999	0.00	0	0	359	415
188. 6	20.1	20.4	21.0	0.33	0.93	0.52	F	999.9	9999	0.00	9	2	358	415
188. 7	21.6	21.5	21.3	-0.14	-0.29	-0.26	D	999.9	9999	0.00	165	35	366	434
188. 8	24.1	23.7	23.3	-0.45	-0.73	-0.41	A	999.9	9999	0.00	404	83	380	458
188. 9	26.2	25.6	25.2	-0.56	-0.96	-0.52	A	999.9	9999	0.00	614	128	392	492
188.10	28.5	27.9	27.5	-0.59	-1.00	-0.52	A	999.9	9999	0.00	809	165	401	527
188.11	31.1	30.6	29.9	-0.54	-1.79	-0.78	A	999.9	9999	0.00	988	192	416	567
188.12	32.1	31.3	30.8	-0.79	-1.40	-0.61	A	999.9	9999	0.00	1103	208	419	587
188.13	32.5	32.2	31.8	-0.34	-0.75	-0.48	A	999.9	9999	0.00	1162	220	430	610
188.14	34.3	33.4	32.8	-0.88	-1.46	-0.64	A	999.9	9999	0.00	1209	240	445	629
188.15	34.4	33.9	33.6	-0.48	-0.84	-0.41	A	999.9	9999	0.00	1164	236	452	613
188.16	33.4	33.1	32.7	-0.35	-0.69	-0.41	A	999.9	9999	0.00	951	195	435	559
188.17	34.9	34.3	33.7	-0.60	-1.15	-0.62	A	999.9	9999	0.00	674	140	430	556
188.18	33.6	33.2	32.9	-0.38	-0.65	-0.35	B	999.9	9999	0.00	105	20	430	511
188.19	25.7	25.8	26.4	0.10	0.76	0.58	F	999.9	9999	0.00	0	0	412	451
188.20	25.0	25.0	25.2	-0.01	0.24	0.14	E	999.9	9999	0.00	3	0	412	449
188.21	25.5	25.5	25.4	-0.04	-0.02	-0.09	E	999.9	9999	0.00	0	0	415	453
188.22	26.3	26.6	26.8	0.36	0.53	0.04	E	999.9	9999	0.00	0	0	412	454
188.23	26.2	26.3	26.4	0.09	0.18	0.00	E	999.9	9999	0.00	0	0	412	456

DAILY SUMMARIES

3 METER TEMP --- AVG = 27.0 MAX = 34.9 MIN = 20.1 AVG DEW POINT = 999.9 TOTAL PRCP = 0.00

10 METER WINDS -- AVG SPEED = 2.0 AVG DIR = 128 PEAK SPEED = 13.5 , OCCURRED DURING HOUR 19

NUMBER OF HOURS PER STABILITY CLASS A = 10 , B = 1, C = 0, D = 1, E = 4, F = 7, G = 1

WIPP METEOROLOGICAL DATA DAILY SUMMARY FOR 7/ 8/77

JULIAN DAY.HR	3 METER WIND DIR	SPD	PEAK SPD	TURB INT	10 METER WIND DIR	SPD	PEAK SPD	TURB INT	30 METER WIND DIR	SPD	PEAK SPD	TURB INT	BAROM PRESS
189. 0	135	3.5	6.0	99.99	144	4.6	8.0	99.99	148	7.0	10.0	99.99	894.3
189. 1	124	1.5	3.0	99.99	138	2.9	5.5	99.99	142	6.0	8.3	99.99	894.4
189. 2	135	1.5	3.5	99.99	138	3.0	5.5	99.99	142	5.5	7.8	99.99	894.5
189. 3	162	1.5	3.5	99.99	174	2.9	5.0	99.99	173	4.5	7.8	99.99	894.6
189. 4	140	1.3	2.5	99.99	144	2.9	3.0	99.99	151	4.5	5.8	99.99	894.9
189. 5	119	1.5	2.5	99.99	132	2.1	4.5	99.99	135	6.5	7.3	99.99	895.3
189. 6	108	2.0	3.0	99.99	120	1.6	4.0	99.99	119	5.5	8.3	99.99	895.7
189. 7	135	2.5	4.0	99.99	138	3.2	5.5	99.99	135	6.0	8.5	99.99	896.6
189. 8	119	2.5	4.0	99.99	132	2.0	6.0	99.99	130	5.0	8.5	99.99	897.1
189. 9	119	2.0	4.5	99.99	132	2.2	6.0	99.99	124	4.5	7.5	99.99	897.9
189.10	108	3.0	4.5	99.99	9999	3.9	999.9	99.99	86	5.0	6.5	99.99	898.2
189.11	92	4.5	3.5	99.99	90	2.2	5.5	99.99	97	2.5	6.0	99.99	898.2
189.12	81	1.5	3.0	99.99	30	2.9	4.5	99.99	18	3.0	5.5	99.99	898.2
189.13	346	2.0	4.0	99.99	48	8.1	4.5	99.99	67	9.5	18.3	99.99	899.3
189.14	7	6.0	11.5	99.99	24	4.9	15.0	99.99	29	6.0	15.5	99.99	899.7
189.15	340	3.0	10.0	99.99	36	3.6	13.0	99.99	29	5.0	7.0	99.99	900.1
189.16	346	2.0	3.5	99.99	174	4.9	4.5	99.99	184	6.5	9.5	99.99	899.2
189.17	162	3.5	4.5	99.99	150	1.6	7.0	99.99	146	2.5	9.5	99.99	899.0
189.18	157	1.5	3.0	99.99	156	2.4	6.5	99.99	130	6.0	7.5	99.99	898.2
189.19	70	2.0	4.0	99.99	84	2.7	5.0	99.99	81	4.5	8.5	99.99	897.6
189.20	43	1.5	3.5	99.99	66	2.4	5.0	99.99	54	3.0	8.0	99.99	897.9
189.21	76	1.5	2.5	99.99	90	1.1	5.5	99.99	86	4.5	5.0	99.99	898.7
189.22	346	0.5	2.5	99.99	330	1.0	3.5	99.99	259	0.3	6.0	99.99	899.3
189.23	313	0.5	1.5	99.99	60	0.5	4.0	99.99	248	1.0	1.5	99.99	899.8

JULIAN DAY.HR	TEMPERATURES 3 M	10 M	30 M	DELTA TEMPS 10-3	30-3	30-10	STAB CLASS	DEW POINT	REL HUM	PRCP	RADIATION PARAMETERS SW SKY	SW REF	LW SKY	LW REF
189. 0	25.9	26.3	24.7	0.33	0.85	0.42	F	999.9	9999	0.00	0	0	386	447
189. 1	24.1	24.7	25.4	0.51	1.28	0.66	F	999.9	9999	0.00	0	0	373	436
189. 2	23.8	24.2	24.5	0.36	0.76	0.31	F	999.9	9999	0.00	0	0	379	434
189. 3	22.4	23.0	23.7	0.54	1.33	0.68	F	999.9	9999	0.00	0	0	377	427
189. 4	21.8	22.6	23.4	0.82	1.61	0.70	F	999.9	9999	0.00	0	0	368	423
189. 5	21.7	22.2	23.0	0.38	1.27	0.79	F	999.9	9999	0.00	0	0	366	424
189. 6	21.9	22.0	22.4	0.13	0.59	0.38	F	999.9	9999	0.00	7	0	366	424
189. 7	22.5	22.5	22.5	0.02	0.08	-0.04	E	999.9	9999	0.00	58	11	387	433
189. 8	23.4	23.3	23.1	-0.13	-0.27	-0.26	D	999.9	9999	0.00	105	21	406	445
189. 9	25.5	25.3	24.9	-0.26	-0.58	-0.40	A	999.9	9999	0.00	219	44	413	452
189.10	25.8	25.3	24.8	-0.52	-1.01	-0.60	A	999.9	9999	0.00	253	48	408	459
189.11	27.5	27.6	26.8	0.01	-0.66	-0.77	A	999.9	9999	0.00	387	75	417	494
189.12	28.7	28.3	28.1	-0.34	-0.53	-0.28	D	999.9	9999	0.00	248	44	433	495
189.13	19.4	19.5	19.5	0.07	0.15	0.00	E	999.9	9999	0.03	22	3	394	413
189.14	19.0	19.1	19.2	0.07	0.18	0.00	E	999.9	9999	0.20	18	3	394	417
189.15	19.4	19.5	19.6	0.07	0.21	0.06	E	999.9	9999	0.23	65	9	395	421
189.16	19.1	19.1	19.1	-0.04	-0.03	-0.08	E	999.9	9999	0.27	45	6	397	421
189.17	18.9	19.3	19.7	0.34	0.78	0.34	F	999.9	9999	0.03	41	10	388	423
189.18	20.0	20.6	21.3	0.52	1.28	0.68	F	999.9	9999	0.00	83	14	387	425
189.19	21.4	21.5	21.8	0.07	0.40	0.24	E	999.9	9999	0.00	183	38	395	438
189.20	21.2	21.6	22.0	0.43	0.88	0.36	F	999.9	9999	0.00	4	0	369	418
189.21	20.2	20.8	21.3	0.60	1.12	0.42	F	999.9	9999	0.00	0	0	383	420
189.22	19.0	20.3	19.8	1.23	0.79	-0.50	A	999.9	9999	0.00	0	0	354	411
189.23	17.8	19.3	19.5	1.50	1.73	0.12	E	999.9	9999	0.00	0	0	685	703

DAILY SUMMARIES

3 METER TEMP --- AVG = 22.1 MAX = 28.7 MIN = 17.8 AVG DEW POINT = 999.9 TOTAL PRCP = 0.76

10 METER WINDS -- AVG SPEED = 1.8 AVG DIR = 107 PEAK SPEED = 15.0 , OCCURRED DURING HOUR 14

NUMBER OF HOURS PER STABILITY CLASS A = 4 , B = 0, C = 0, D = 2, E = 7, F = 11, G = 0

WIPP METEOROLOGICAL DATA DAILY SUMMARY FOR 7/ 9/77

JULIAN DAY.HR	3 METER WIND DIR	SPD	PEAK SPD	TURB INT	10 METER WIND DIR	SPD	PEAK SPD	TURB INT	30 METER WIND DIR	SPD	PEAK SPD	TURB INT	BAROM PRESS
190. 0	29	1.5	2.0	99.99	54	2.1	1.5	99.99	88	3.0	3.5	99.99	900.8
190. 1	18	1.5	2.5	99.99	54	2.8	2.0	99.99	99	4.5	5.0	99.99	901.0
190. 2	340	1.3	1.5	99.99	48	2.5	3.5	99.99	72	4.8	4.5	99.99	900.8
190. 3	351	1.0	2.5	99.99	36	2.4	2.5	99.99	18	4.5	6.5	99.99	900.4
190. 4	56	1.5	3.0	99.99	72	3.1	3.5	99.99	99	5.0	6.3	99.99	899.7
190. 5	162	1.5	3.5	99.99	228	2.0	4.5	99.99	162	4.0	6.8	99.99	899.9
190. 6	211	1.5	3.0	99.99	258	2.0	3.5	99.99	243	2.5	5.0	99.99	900.5
190. 7	313	0.5	2.0	99.99	342	0.9	3.0	99.99	340	1.5	4.0	99.99	900.5
190. 8	292	1.5	2.5	99.99	324	1.8	2.5	99.99	313	1.3	3.0	99.99	900.8
190. 9	254	1.5	3.0	99.99	300	1.7	2.5	99.99	356	2.5	3.8	99.99	901.0
190.10	243	1.0	2.5	99.99	270	0.9	3.0	99.99	294	2.0	3.8	99.99	900.9
190.11	178	2.5	4.0	99.99	222	2.1	3.5	99.99	232	2.5	4.5	99.99	900.9
190.12	162	3.0	4.0	99.99	180	2.8	3.0	99.99	216	2.5	5.5	99.99	900.6
190.13	162	2.5	5.0	99.99	204	3.1	5.0	99.99	200	4.8	6.3	99.99	899.8
190.14	173	3.0	5.5	99.99	210	2.4	5.5	99.99	162	4.0	7.8	99.99	898.8
190.15	178	4.0	6.0	99.99	210	4.4	6.5	99.99	173	4.5	8.3	99.99	898.2
190.16	178	3.0	6.0	99.99	204	3.6	7.0	99.99	194	3.5	8.0	99.99	897.2
190.17	173	2.5	6.0	99.99	228	2.3	6.5	99.99	173	3.5	7.5	99.99	896.6
190.18	184	2.5	5.5	99.99	204	2.9	6.5	99.99	192	3.0	7.5	99.99	896.0
190.19	162	3.0	4.5	99.99	180	3.2	7.0	99.99	173	3.5	6.5	99.99	895.8
190.20	140	1.5	5.0	99.99	144	2.7	5.0	99.99	146	4.8	7.0	99.99	895.8
190.21	108	1.0	1.5	99.99	120	0.5	5.5	99.99	140	6.3	7.0	99.99	896.0
190.22	108	1.3	2.0	99.99	126	1.6	3.0	99.99	135	7.0	8.5	99.99	896.1
190.23	108	1.5	2.0	99.99	126	1.2	2.5	99.99	130	7.5	9.0	99.99	896.2

JULIAN DAY.HR	TEMPERATURES 3 M	10 M	30 M	DELTA TEMPS 10-3	30-3	30-10	STAB CLASS	DEW POINT	REL HUM	PRCP	RADIATION PARAMETERS SW SKY	SW REF	LW SKY	LW REF
190. 0	18.0	18.8	20.1	0.77	2.07	1.21	G	999.9	9999	0.00	0	0	363	409
190. 1	18.1	18.6	20.4	0.54	2.33	1.71	G	999.9	9999	0.00	0	0	352	405
190. 2	18.4	18.9	20.8	0.53	2.49	1.88	G	999.9	9999	0.00	0	0	387	411
190. 3	18.8	19.2	20.8	0.40	2.04	1.52	G	999.9	9999	0.00	0	0	386	410
190. 4	18.1	18.5	19.5	0.39	1.42	0.92	G	999.9	9999	0.00	0	0	352	406
190. 5	17.7	18.0	18.6	0.32	0.99	0.53	F	999.9	9999	0.00	0	0	370	405
190. 6	16.7	16.9	17.0	0.18	0.34	0.04	E	999.9	9999	0.00	6	0	344	398
190. 7	16.9	17.0	16.8	0.03	-0.08	-0.18	D	999.9	9999	0.00	157	30	351	418
190. 8	19.2	18.7	18.4	-0.58	-0.86	-0.38	A	999.9	9999	0.00	388	70	363	426
190. 9	21.2	20.7	20.6	-0.51	-0.56	-0.12	D	999.9	9999	0.00	614	110	373	445
190.10	25.0	24.4	24.2	-0.60	-0.70	-0.22	D	999.9	9999	0.00	817	145	390	477
190.11	26.7	26.1	24.9	-0.69	-1.85	-1.25	A	999.9	9999	0.00	985	173	395	495
190.12	26.5	26.5	26.7	0.04	0.19	0.04	E	999.9	9999	0.00	1103	191	402	523
190.13	29.4	28.3	27.4	-1.19	-1.93	-0.86	A	999.9	9999	0.00	1127	198	404	538
190.14	30.8	30.7	29.9	-0.09	-0.84	-0.86	A	999.9	9999	0.00	1052	193	419	568
190.15	31.7	30.4	29.8	-1.28	-1.85	-0.68	A	999.9	9999	0.00	961	179	405	548
190.16	32.8	31.0	30.5	-1.71	-2.18	-0.57	A	999.9	9999	0.00	830	153	412	553
190.17	32.7	31.6	31.0	-1.09	-1.64	-0.65	A	999.9	9999	0.00	607	118	404	531
190.18	32.5	31.1	30.7	-1.34	-1.78	-0.52	A	999.9	9999	0.00	389	74	399	509
190.19	31.3	30.7	30.3	-0.63	-0.89	-0.37	B	999.9	9999	0.00	158	32	392	488
190.20	27.5	27.9	28.6	0.38	1.05	0.55	F	999.9	9999	0.00	0	0	380	454
190.21	24.2	25.4	27.5	1.22	3.35	2.05	G	999.9	9999	0.00	0	0	372	442
190.22	23.6	24.5	26.5	0.94	2.94	1.89	G	999.9	9999	0.00	0	0	366	440
190.23	22.8	23.7	25.7	0.88	2.90	1.89	G	999.9	9999	0.00	0	0	365	436

DAILY SUMMARIES

3 METER TEMP --- AVG = 24.2 MAX = 32.8 MIN = 16.7 AVG DEW POINT = 999.9 TOTAL PRCP = 0.00

10 METER WINDS -- AVG SPEED = 0.8 AVG DIR = 189 PEAK SPEED = 7.0 , OCCURRED DURING HOUR 16

NUMBER OF HOURS PER STABILITY CLASS A = 8 , B = 1, C = 0, D = 3, E = 2, F = 2, G = 8

WIPP METEOROLOGICAL DATA DAILY SUMMARY FOR 7/10/77

JULIAN DAY.HR	3 METER WIND DIR	SPD	PEAK SPD	TURB INT	10 METER WIND DIR	SPD	PEAK SPD	TURB INT	30 METER WIND DIR	SPD	PEAK SPD	TURB INT	BAROM PRESS
191. 0	103	1.0	2.0	99.99	126	0.9	3.0	99.99	135	6.5	9.5	99.99	896.2
191. 1	113	1.5	3.0	99.99	132	2.2	2.5	99.99	130	7.0	9.3	99.99	896.1
191. 2	119	2.0	4.0	99.99	126	2.3	5.5	99.99	130	7.0	9.3	99.99	896.0
191. 3	130	2.0	4.0	99.99	132	3.2	5.0	99.99	135	7.0	8.5	99.99	895.7
191. 4	124	1.5	4.0	99.99	132	2.3	5.0	99.99	135	6.5	8.5	99.99	895.7
191. 5	135	1.5	2.5	99.99	138	2.7	5.5	99.99	140	5.5	7.0	99.99	895.6
191. 6	135	1.8	3.5	99.99	138	3.1	5.5	99.99	143	6.5	7.5	99.99	895.8
191. 7	135	2.5	4.0	99.99	138	3.3	5.0	99.99	140	5.0	8.0	99.99	896.0
191. 8	162	4.0	5.0	99.99	168	4.3	5.0	99.99	178	5.5	6.5	99.99	896.4
191. 9	162	3.5	6.0	99.99	162	3.9	5.5	99.99	173	5.3	7.0	99.99	896.4
191.10	167	3.5	6.0	99.99	180	3.9	6.5	99.99	178	4.0	5.8	99.99	896.4
191.11	173	3.5	6.0	99.99	198	3.7	5.5	99.99	194	4.5	7.5	99.99	896.4
191.12	140	3.5	7.0	99.99	156	4.1	7.0	99.99	184	5.3	7.3	99.99	896.0
191.13	189	1.5	6.5	99.99	132	1.8	7.5	99.99	194	5.0	7.5	99.99	895.4
191.14	162	2.5	6.0	99.99	180	4.1	7.5	99.99	162	5.5	7.0	99.99	894.6
191.15	130	2.5	5.5	99.99	144	2.6	7.5	99.99	113	4.3	9.3	99.99	894.2
191.16	124	3.5	6.0	99.99	114	3.8	7.0	99.99	151	4.0	8.3	99.99	893.6
191.17	151	3.0	6.5	99.99	120	3.0	7.0	99.99	194	4.0	8.5	99.99	893.0
191.18	157	4.0	7.0	99.99	162	5.2	7.5	99.99	157	4.8	8.5	99.99	892.7
191.19	151	3.5	6.5	99.99	150	4.3	8.0	99.99	162	5.5	8.5	99.99	892.7
191.20	135	1.5	5.5	99.99	144	3.0	8.0	99.99	140	5.0	11.5	99.99	892.7
191.21	108	1.0	2.0	99.99	60	0.8	7.0	99.99	146	6.5	7.5	99.99	892.9
191.22	108	1.5	2.0	99.99	126	1.1	3.0	99.99	135	7.5	8.3	99.99	893.5
191.23	130	3.5	5.0	99.99	138	5.7	2.5	99.99	146	8.0	9.5	99.99	893.8

JULIAN DAY.HR	TEMPERATURES 3 M	10 M	30 M	DELTA TEMPS 10-3	30-3	30-10	STAB CLASS	DEW POINT	REL HUM	PRCP	RADIATION PARAMETERS SW SKY	SW REF	LW SKY	LW REF
191. 0	22.2	23.2	25.2	0.94	3.05	2.01	G	999.9	9999	0.00	0	0	366	431
191. 1	22.9	23.6	24.2	0.66	1.26	0.50	F	999.9	9999	0.00	0	0	369	434
191. 2	22.7	23.1	23.5	0.37	0.81	0.34	F	999.9	9999	0.00	0	0	368	430
191. 3	21.4	22.0	22.5	0.50	1.16	0.54	F	999.9	9999	0.00	0	0	363	425
191. 4	21.2	21.7	22.5	0.53	1.39	0.75	F	999.9	9999	0.00	0	0	363	422
191. 5	20.3	21.0	22.0	0.69	1.72	0.93	G	999.9	9999	0.00	0	0	359	418
191. 6	19.9	20.6	21.7	0.62	1.78	1.05	G	999.9	9999	0.00	8	0	358	416
191. 7	22.2	22.1	22.2	-0.10	-0.01	-0.03	E	999.9	9999	0.00	164	34	368	437
191. 8	26.1	25.7	25.5	-0.41	-0.60	-0.31	C	999.9	9999	0.00	404	79	386	460
191. 9	28.4	27.8	27.2	-0.59	-1.13	-0.65	A	999.9	9999	0.00	631	122	394	488
191.10	30.3	29.5	29.0	-0.82	-1.31	-0.60	A	999.9	9999	0.00	834	158	404	521
191.11	32.2	31.4	30.5	-0.80	-1.65	-0.96	A	999.9	9999	0.00	998	183	416	550
191.12	32.7	32.5	32.2	-0.26	-0.42	-0.30	C	999.9	9999	0.00	1111	200	427	588
191.13	36.0	34.7	34.0	-1.24	-1.93	-0.79	A	999.9	9999	0.00	1132	204	427	597
191.14	35.4	35.1	34.3	-0.36	-1.08	-0.84	A	999.9	9999	0.00	1069	201	423	596
191.15	37.5	36.8	35.5	-0.73	-2.00	-1.40	A	999.9	9999	0.00	965	184	420	592
191.16	36.8	35.3	34.5	-1.53	-2.22	-0.82	A	999.9	9999	0.00	835	157	415	577
191.17	36.8	35.7	35.0	-1.05	-1.68	-0.73	A	999.9	9999	0.00	607	120	415	567
191.18	35.3	34.4	33.9	-0.96	-1.35	-0.52	A	999.9	9999	0.00	393	77	409	529
191.19	34.2	33.7	33.4	-0.50	-0.77	-0.40	A	999.9	9999	0.00	158	33	402	504
191.20	30.0	30.5	31.1	0.52	1.59	0.60	F	999.9	9999	0.00	0	0	388	467
191.21	26.5	27.5	29.6	1.03	3.25	2.08	G	999.9	9999	0.00	0	0	381	455
191.22	25.5	26.3	28.1	0.78	2.61	1.73	G	999.9	9999	0.00	0	0	379	450
191.23	26.8	27.3	27.6	0.42	0.89	0.34	F	999.9	9999	0.00	0	0	380	456

DAILY SUMMARIES

3 METER TEMP --- AVG = 28.5 MAX = 37.5 MIN = 19.9 AVG DEW POINT = 999.9 TOTAL PRCP = 0.00

10 METER WINDS -- AVG SPEED = 2.9 AVG DIR = 148 PEAK SPEED = 8.0 , OCCURRED DURING HOUR 19

NUMBER OF HOURS PER STABILITY CLASS A = 10 , B = 0, C = 2, D = 0, E = 1, F = 6, G = 5

WIPP METEOROLOGICAL DATA DAILY SUMMARY FOR 7/11/77

JULIAN DAY.HR	3 METER WIND DIR	SPD	PEAK SPD	TURB INT	10 METER WIND DIR	SPD	PEAK SPD	TURB INT	30 METER WIND DIR	SPD	PEAK SPD	TURB INT	BAROM PRESS
192. 0	140	5.0	8.0	99.99	144	7.2	6.5	99.99	151	9.0	11.0	99.99	893.8
192. 1	151	5.0	9.0	99.99	168	7.0	10.0	99.99	157	8.5	12.0	99.99	893.9
192. 2	146	4.5	8.5	99.99	162	6.1	10.5	99.99	157	8.5	12.5	99.99	894.0
192. 3	140	4.5	7.5	99.99	144	6.8	10.0	99.99	146	8.5	11.5	99.99	894.0
192. 4	140	5.0	7.0	99.99	144	6.2	9.5	99.99	151	8.0	10.5	99.99	893.9
192. 5	135	3.5	6.5	99.99	144	5.3	9.5	99.99	135	7.5	10.3	99.99	894.0
192. 6	124	2.0	4.5	99.99	138	3.4	9.0	99.99	135	7.0	8.8	99.99	894.2
192. 7	124	2.0	3.0	99.99	132	3.3	5.5	99.99	132	7.0	8.5	99.99	894.6
192. 8	146	4.0	5.5	99.99	138	5.3	6.0	99.99	151	6.5	8.5	99.99	894.9
192. 9	157	3.0	5.0	99.99	162	3.7	7.5	99.99	167	4.0	7.5	99.99	894.9
192.10	151	3.5	4.5	99.99	150	3.9	6.5	99.99	157	4.0	6.3	99.99	894.8
192.11	162	1.5	4.5	99.99	156	1.5	5.5	99.99	216	1.0	5.0	99.99	894.7
192.12	254	1.0	4.0	99.99	162	1.3	5.0	99.99	297	2.3	3.8	99.99	894.2
192.13	108	2.0	5.0	99.99	114	2.2	4.0	99.99	126	3.5	5.3	99.99	893.6
192.14	130	2.5	4.5	99.99	180	3.4	4.5	99.99	140	4.0	6.0	99.99	893.1
192.15	86	3.5	8.5	99.99	84	4.1	5.5	99.99	97	1.5	10.0	99.99	892.4
192.16	108	2.0	7.0	99.99	138	2.7	9.0	99.99	124	5.5	9.8	99.99	892.0
192.17	103	2.5	7.0	99.99	120	2.8	7.5	99.99	113	4.0	9.5	99.99	891.4
192.18	146	4.0	9.0	99.99	138	4.6	8.0	99.99	157	6.5	13.5	99.99	891.2
192.19	135	5.0	7.5	99.99	150	6.6	10.5	99.99	151	7.5	10.5	99.99	891.2
192.20	135	2.5	6.0	99.99	150	4.2	9.0	99.99	146	6.5	9.3	99.99	891.6
192.21	119	1.5	3.5	99.99	138	3.2	7.5	99.99	140	7.0	8.5	99.99	892.3
192.22	130	4.0	7.0	99.99	144	999.9	5.0	99.99	146	8.0	10.3	99.99	893.2
192.23	135	5.0	7.5	99.99	144	999.9	8.0	99.99	151	9.0	11.5	99.99	9999.0

JULIAN DAY.HR	TEMPERATURES 3 M	10 M	30 M	DELTA TEMPS 10-3	30-3	30-10	STAB CLASS	DEW POINT	REL HUM	PRCP	RADIATION PARAMETERS SW SKY	SW REF	LW SKY	LW REF
192. 0	26.3	26.6	26.8	0.31	0.58	0.16	E	999.9	9999	0.00	0	0	376	451
192. 1	25.3	25.6	25.7	0.27	0.47	0.08	E	999.9	9999	0.00	0	0	370	444
192. 2	24.2	24.5	24.7	0.27	0.51	0.11	E	999.9	9999	0.00	0	0	368	439
192. 3	23.4	23.7	23.8	0.26	0.48	0.11	E	999.9	9999	0.00	0	0	363	436
192. 4	22.7	22.9	23.1	0.26	0.49	0.12	E	999.9	9999	0.00	0	0	361	429
192. 5	22.0	22.4	22.6	0.34	0.66	0.21	E	999.9	9999	0.00	0	0	359	425
192. 6	20.9	21.4	22.0	0.50	1.12	0.50	F	999.9	9999	0.00	8	0	355	421
192. 7	22.3	22.2	22.1	-0.12	-0.14	-0.15	D	999.9	9999	0.00	168	35	363	437
192. 8	25.2	24.8	24.4	-0.48	-0.78	-0.43	A	999.9	9999	0.00	402	80	376	457
192. 9	28.4	27.8	27.2	-0.68	-1.19	-0.64	A	999.9	9999	0.00	636	125	390	494
192.10	30.7	30.0	29.6	-0.74	-1.12	-0.49	A	999.9	9999	0.00	843	163	402	531
192.11	34.2	34.0	32.8	-0.17	-1.35	-1.33	A	999.9	9999	0.00	1009	190	419	579
192.12	34.4	34.9	35.0	0.49	0.68	0.07	E	999.9	9999	0.00	1119	205	427	608
192.13	37.7	37.8	36.2	0.12	-1.47	-1.73	A	999.9	9999	0.00	1140	208	423	609
192.14	37.6	37.5	36.8	-0.11	-0.88	-0.80	A	999.9	9999	99.99	9999	9999	9999	9999
192.15	37.2	36.7	36.5	-0.52	-0.62	-0.23	D	999.9	9999	0.00	996	191	427	626
192.16	38.9	37.8	36.7	-1.12	-2.07	-1.08	A	999.9	9999	0.00	845	161	420	604
192.17	38.1	37.2	36.3	-0.87	-1.74	-1.01	A	999.9	9999	0.00	616	123	417	578
192.18	36.7	35.8	35.3	-0.86	-1.32	-0.59	A	999.9	9999	0.00	384	76	415	549
192.19	34.8	34.5	34.2	-0.31	-0.50	-0.32	C	999.9	9999	0.00	51	31	402	515
192.20	31.2	31.7	32.1	0.43	0.96	0.42	F	999.9	9999	0.00	0	0	388	482
192.21	28.0	28.8	29.8	0.79	1.87	0.95	G	999.9	9999	0.00	0	0	380	469
192.22	28.3	28.7	999.9	99.99	99.99	99.99		999.9	9999	0.00	0	0	383	471
192.23	999.9	999.9	999.9	99.99	99.99	99.99		999.9	9999	99.99	9999	9999	9999	9999

DAILY SUMMARIES

3 METER TEMP --- AVG = 29.9 MAX = 38.9 MIN = 20.9 AVG DEW POINT = 999.9 TOTAL PRCP = 0.00

10 METER WINDS -- AVG SPEED = 4.1 AVG DIR = 145 PEAK SPEED = 10.5 , OCCURRED DURING HOUR 2

NUMBER OF HOURS PER STABILITY CLASS A = 9 , B = 0, C = 1, D = 2, E = 7, F = 2, G = 1

WIPP METEOROLOGICAL DATA DAILY SUMMARY FOR 7/12/77

JULIAN DAY.HR	3 METER WIND DIR	SPD	PEAK SPD	TURB INT	10 METER WIND DIR	SPD	PEAK SPD	TURB INT	30 METER WIND DIR	SPD	PEAK SPD	TURB INT	BAROM PRESS
193. 0	135	5.0	8.0	99.99	150	3.1	9.5	99.99	146	8.5	11.0	99.99	9999.0
193. 1	135	5.0	8.0	99.99	150	3.0	10.0	99.99	146	9.0	11.8	99.99	9999.0
193. 2	130	4.5	7.5	99.99	156	3.0	10.5	99.99	140	8.5	11.5	99.99	9999.0
193. 3	130	4.5	7.0	99.99	144	2.9	11.0	99.99	140	8.5	11.3	99.99	9999.0
193. 4	124	3.5	7.0	99.99	138	2.9	9.5	99.99	135	8.0	6.8	99.99	9999.0
193. 5	124	3.0	7.0	99.99	144	2.8	9.0	99.99	140	7.0	11.3	99.99	9999.0
193. 6	124	3.0	5.5	99.99	132	2.7	8.5	99.99	135	7.5	9.8	99.99	9999.0
193. 7	119	3.0	5.0	99.99	138	2.7	7.5	99.99	127	7.5	10.5	99.99	9999.0
193. 8	119	4.0	6.0	99.99	126	2.6	6.5	99.99	132	6.0	10.3	99.99	9999.0
193. 9	108	3.0	5.5	99.99	126	2.6	8.0	99.99	124	6.5	8.8	99.99	9999.0
193.10	119	2.0	5.5	99.99	120	2.2	7.0	99.99	140	4.8	8.0	99.99	895.6
193.11	108	3.5	6.0	99.99	102	3.2	7.0	99.99	113	5.0	8.3	99.99	895.6
193.12	108	3.5	6.0	99.99	114	4.1	7.5	99.99	113	5.5	9.0	99.99	895.2
193.13	108	3.0	7.0	99.99	120	3.2	7.0	99.99	113	6.0	9.8	99.99	895.0
193.14	124	2.5	8.5	99.99	120	3.4	7.5	99.99	130	6.5	9.5	99.99	894.5
193.15	119	2.0	8.0	99.99	132	2.4	9.0	99.99	151	5.8	10.0	99.99	893.8
193.16	157	3.0	7.0	99.99	144	4.2	10.0	99.99	162	5.5	7.5	99.99	893.8
193.17	124	4.0	6.5	99.99	150	2.7	8.0	99.99	130	3.5	13.3	99.99	893.0
193.18	119	3.5	7.0	99.99	138	4.3	8.0	99.99	124	5.0	10.0	99.99	892.7
193.19	151	6.0	10.0	99.99	150	8.9	10.0	99.99	151	9.5	13.5	99.99	892.7
193.20	151	5.0	10.5	99.99	156	6.7	12.0	99.99	157	8.5	13.5	99.99	892.9
193.21	146	5.0	8.0	99.99	144	6.5	12.5	99.99	149	9.0	11.3	99.99	9999.0
193.22	135	4.5	9.0	99.99	144	6.0	10.0	99.99	140	8.5	12.5	99.99	9999.0
193.23	135	4.5	8.0	99.99	144	5.5	10.5	99.99	135	8.0	11.5	99.99	9999.0

JULIAN DAY.HR	TEMPERATURES 3 M	10 M	30 M	DELTA TEMPS 10-3	30-3	30-10	STAB CLASS	DEW POINT	REL HUM	PRCP	RADIATION PARAMETERS SW SKY	SW REF	LW SKY	LW REF
193. 0	999.9	999.9	999.9	99.99	99.99	99.99		999.9	9999	99.99	9999	9999	9999	9999
193. 1	999.9	999.9	999.9	99.99	99.99	99.99		999.9	9999	99.99	9999	9999	9999	9999
193. 2	999.9	999.9	999.9	99.99	99.99	99.99		999.9	9999	99.99	9999	9999	9999	9999
193. 3	999.9	999.9	999.9	99.99	99.99	99.99		999.9	9999	99.99	9999	9999	9999	9999
193. 4	999.9	999.9	999.9	99.99	99.99	99.99		999.9	9999	99.99	9999	9999	9999	9999
193. 5	999.9	999.9	999.9	99.99	99.99	99.99		999.9	9999	99.99	9999	9999	9999	9999
193. 6	999.9	999.9	999.9	99.99	99.99	99.99		999.9	9999	99.99	9999	9999	9999	9999
193. 7	999.9	999.9	999.9	99.99	99.99	99.99		999.9	9999	99.99	9999	9999	9999	9999
193. 8	999.9	999.9	999.9	99.99	99.99	99.99		999.9	9999	99.99	9999	9999	9999	9999
193. 9	999.9	999.9	999.9	99.99	99.99	99.99		999.9	9999	99.99	9999	9999	9999	9999
193.10	29.0	28.2	27.3	-0.82	-1.61	-0.93	A	999.9	9999	0.00	843	163	395	531
193.11	30.5	29.6	28.4	-0.88	-2.04	-1.31	A	999.9	9999	0.00	1024	193	399	561
193.12	32.0	31.6	30.2	-0.45	-1.71	-1.40	A	999.9	9999	0.00	1132	209	409	582
193.13	34.7	33.3	31.6	-1.42	-3.02	-1.76	A	999.9	9999	0.00	1145	211	424	617
193.14	34.7	34.0	33.0	-0.70	-0.80	-1.05	A	999.9	9999	0.00	1080	210	424	615
193.15	36.4	35.1	33.8	-1.26	-2.41	-1.30	A	999.9	9999	0.00	1003	193	427	614
193.16	35.6	34.3	33.5	-1.28	-2.04	-0.84	A	999.9	9999	0.00	856	161	417	576
193.17	36.2	35.1	34.3	-1.14	-1.96	-0.95	A	999.9	9999	0.00	687	137	428	584
193.18	34.9	33.9	33.3	-1.02	-1.57	-0.68	A	999.9	9999	0.00	397	80	410	535
193.19	32.0	31.7	31.4	-0.31	-0.55	-0.36	B	999.9	9999	0.00	149	32	405	503
193.20	30.2	30.3	30.4	0.15	0.25	-0.02	E	999.9	9999	0.00	5	0	398	485
193.21	999.9	999.9	999.9	99.99	99.99	99.99		999.9	9999	99.99	9999	9999	9999	9999
193.22	999.9	999.9	999.9	99.99	99.99	99.99		999.9	9999	99.99	9999	9999	9999	9999
193.23	999.9	999.9	999.9	99.99	99.99	99.99		999.9	9999	99.99	9999	9999	9999	9999

DAILY SUMMARIES

3 METER TEMP --- AVG = 33.3 MAX = 36.4 MIN = 29.0 AVG DEW POINT = 999.9 TOTAL PRCP = 0.00

10 METER WINDS -- AVG SPEED = 3.7 AVG DIR = 139 PEAK SPEED = 12.5 , OCCURRED DURING HOUR 21

NUMBER OF HOURS PER STABILITY CLASS A = 9 , B = 1, C = 0, D = 0, E = 1, F = 0, G = 0

WIPP METEOROLOGICAL DATA DAILY SUMMARY FOR 7/13/77

JULIAN DAY.HR	3 METER WIND DIR	SPD	PEAK SPD	TURB INT	10 METER WIND DIR	SPD	PEAK SPD	TURB INT	30 METER WIND DIR	SPD	PEAK SPD	TURB INT	BAROM PRESS
194. 0	124	3.0	7.5	99.99	138	5.1	10.5	99.99	130	8.0	9.5	99.99	9999.0
194. 1	130	4.5	7.5	99.99	138	5.2	8.0	99.99	135	8.5	12.0	99.99	9999.0
194. 2	130	4.0	9.0	99.99	138	5.3	10.5	99.99	135	8.8	12.3	99.99	9999.0
194. 3	130	4.0	7.5	99.99	132	6.2	10.0	99.99	130	8.5	11.0	99.99	895.9
194. 4	113	2.5	7.0	99.99	126	6.2	10.0	99.99	119	5.8	10.5	99.99	9999.0
194. 5	130	2.0	4.5	99.99	132	6.3	9.0	99.99	130	6.0	8.8	99.99	9999.0
194. 6	124	2.0	5.0	99.99	138	6.5	7.0	99.99	130	6.3	9.0	99.99	9999.0
194. 7	124	3.5	5.5	99.99	144	6.5	6.5	99.99	130	8.0	9.5	99.99	9999.0
194. 8	130	4.5	8.5	99.99	138	6.6	7.5	99.99	140	8.5	10.8	99.99	9999.0
194. 9	124	5.0	8.0	99.99	144	6.7	10.0	99.99	154	7.5	11.5	99.99	9999.0
194.10	151	5.0	8.0	99.99	150	5.9	10.5	99.99	140	8.0	10.5	99.99	897.6
194.11	157	5.0	7.0	99.99	156	5.9	10.5	99.99	151	6.5	9.5	99.99	897.6
194.12	146	3.5	7.5	99.99	162	3.7	9.0	99.99	157	6.0	8.5	99.99	897.2
194.13	157	4.0	7.0	99.99	138	4.4	8.0	99.99	173	4.0	11.5	99.99	896.8
194.14	162	3.0	7.5	99.99	180	4.6	8.0	99.99	167	4.8	9.5	99.99	896.2
194.15	103	2.5	10.0	99.99	102	2.9	9.5	99.99	119	4.5	12.5	99.99	895.6
194.16	140	3.0	7.5	99.99	138	3.1	9.5	99.99	130	6.5	9.5	99.99	895.2
194.17	151	4.5	8.5	99.99	174	5.9	8.0	99.99	151	6.0	10.5	99.99	894.9
194.18	130	4.0	8.5	99.99	138	6.2	12.0	99.99	130	8.0	11.0	99.99	894.2
194.19	124	3.0	8.5	99.99	138	4.1	12.0	99.99	124	8.0	12.0	99.99	894.6
194.20	135	2.0	7.0	99.99	144	4.6	11.0	99.99	130	6.0	10.3	99.99	895.3
194.21	124	2.5	4.5	99.99	126	3.3	9.5	99.99	127	7.0	8.8	99.99	895.5
194.22	119	2.5	5.5	99.99	138	3.7	6.0	99.99	127	7.5	9.8	99.99	896.8
194.23	135	4.0	7.5	99.99	138	4.9	7.0	99.99	130	8.0	12.5	99.99	897.2

JULIAN DAY.HR	TEMPERATURES 3 M	10 M	30 M	DELTA TEMPS 10-3	30-3	30-10	STAB CLASS	DEW POINT	REL HUM	PRCP	RADIATION PARAMETERS SW SKY	SW REF	LW SKY	LW REF
194. 0	999.9	999.9	999.9	99.99	99.99	99.99		999.9	9999	99.99	9999	9999	9999	9999
194. 1	999.9	999.9	999.9	99.99	99.99	99.99		999.9	9999	99.99	9999	9999	9999	9999
194. 2	999.9	999.9	999.9	99.99	99.99	99.99		999.9	9999	99.99	9999	9999	9999	9999
194. 3	23.7	24.0	24.0	0.21	0.37	0.02	E	999.9	9999	0.00	0	0	365	442
194. 4	999.9	999.9	999.9	99.99	99.99	99.99		999.9	9999	99.99	9999	9999	9999	9999
194. 5	999.9	999.9	999.9	99.99	99.99	99.99		999.9	9999	99.99	9999	9999	9999	9999
194. 6	999.9	999.9	999.9	99.99	99.99	99.99		999.9	9999	99.99	9999	9999	9999	9999
194. 7	999.9	999.9	999.9	99.99	99.99	99.99		999.9	9999	99.99	9999	9999	9999	9999
194. 8	999.9	999.9	999.9	99.99	99.99	99.99		999.9	9999	99.99	9999	9999	9999	9999
194. 9	999.9	999.9	999.9	99.99	99.99	99.99		999.9	9999	99.99	9999	9999	9999	9999
194.10	28.3	27.3	26.6	-1.09	-1.66	-0.74	A	999.9	9999	0.00	828	367	395	523
194.11	30.0	29.0	28.2	-0.99	-1.72	-0.90	A	999.9	9999	0.00	990	186	402	552
194.12	31.2	30.8	30.3	-0.40	-0.87	-0.63	A	999.9	9999	0.00	1084	204	419	595
194.13	33.4	32.2	31.6	-1.20	-1.71	-0.68	A	999.9	9999	0.00	1124	208	419	602
194.14	34.4	33.8	32.8	-0.64	-1.60	-1.12	A	999.9	9999	0.00	1090	203	424	614
194.15	34.8	33.9	32.7	-1.35	-2.50	-1.31	A	999.9	9999	0.00	1032	196	424	606
194.16	36.5	35.4	34.5	-1.15	-1.93	-0.94	A	999.9	9999	0.00	835	165	419	597
194.17	35.0	33.7	33.2	-1.32	-1.82	-0.54	A	999.9	9999	0.00	619	123	409	561
194.18	33.8	33.0	32.4	-0.89	-1.33	-0.58	A	999.9	9999	0.00	385	78	406	536
194.19	32.6	32.2	31.9	-0.40	-0.68	-0.40	A	999.9	9999	0.00	149	32	395	506
194.20	29.7	-9.7	30.3	0.34	0.62	0.14	E	999.9	9999	0.00	0	0	390	481
194.21	28.2	28.6	28.8	0.37	0.61	0.10	E	999.9	9999	0.00	0	0	388	472
194.22	27.1	27.4	27.6	0.34	0.63	0.14	E	999.9	9999	0.00	0	0	386	466
194.23	26.4	26.7	26.8	0.25	0.46	0.06	E	999.9	9999	0.00	0	0	381	460

DAILY SUMMARIES

3 METER TEMP --- AVG = 31.0 MAX = 36.5 MIN = 23.7 AVG DEW POINT = 999.9 TOTAL PRCP = 0.00

10 METER WINDS -- AVG SPEED = 5.0 AVG DIR = 142 PEAK SPEED = 12.0 , OCCURRED DURING HOUR 18

NUMBER OF HOURS PER STABILITY CLASS A = 10 , B = 0, C = 0, D = 0, E = 5, F = 0, G = 0

WIPP METEOROLOGICAL DATA DAILY SUMMARY FOR 7/14/77

JULIAN DAY.HR	3 METER WIND DIR	SPD	PEAK SPD	TURB INT	10 METER WIND DIR	SPD	PEAK SPD	TURB INT	30 METER WIND DIR	SPD	PEAK SPD	TURB INT	BAROM PRESS
195. 0	130	3.5	8.5	99.99	138	5.2	9.5	99.99	130	9.0	11.5	99.99	897.5
195. 1	130	3.0	7.5	99.99	114	4.9	9.5	99.99	130	8.0	11.0	99.99	897.5
195. 2	119	3.0	8.5	99.99	132	4.0	9.5	99.99	127	7.5	11.3	99.99	897.5
195. 3	135	3.0	6.0	99.99	138	5.7	10.0	99.99	135	7.0	11.5	99.99	897.5
195. 4	140	2.0	6.5	99.99	150	3.7	8.5	99.99	140	5.3	10.0	99.99	897.9
195. 5	130	2.5	5.5	99.99	138	5.0	8.5	99.99	130	8.5	9.5	99.99	897.9
195. 6	130	1.5	5.0	99.99	132	3.1	7.5	99.99	127	6.5	9.3	99.99	897.9
195. 7	130	2.0	5.0	99.99	132	3.2	8.0	99.99	130	5.5	8.5	99.99	898.0
195. 8	140	3.5	6.0	99.99	150	5.4	7.0	99.99	135	5.5	8.5	99.99	898.6
195. 9	151	3.0	5.5	99.99	162	3.6	8.0	99.99	151	4.0	7.5	99.99	898.8
195.10	157	2.0	6.0	99.99	138	2.4	7.0	99.99	162	3.8	5.0	99.99	898.7
195.11	178	3.0	6.0	99.99	210	2.9	5.0	99.99	184	2.5	6.5	99.99	898.8
195.12	167	3.0	6.0	99.99	360	3.2	5.5	99.99	184	3.5	6.5	99.99	898.6
195.13	194	3.0	6.5	99.99	258	2.2	6.5	99.99	194	2.5	8.0	99.99	897.8
195.14	162	3.0	5.5	99.99	150	4.4	7.5	99.99	173	3.0	6.5	99.99	897.1
195.15	130	3.5	6.0	99.99	108	2.8	6.5	99.99	113	6.5	8.8	99.99	896.6
195.16	135	3.0	11.5	99.99	120	3.3	5.5	99.99	103	4.0	10.5	99.99	895.8
195.17	157	2.5	6.0	99.99	144	4.1	10.0	99.99	130	3.8	9.0	99.99	895.2
195.18	130	3.5	6.0	99.99	144	3.4	8.5	99.99	140	5.5	8.0	99.99	895.0
195.19	151	3.5	7.0	99.99	156	4.2	7.5	99.99	162	6.0	6.5	99.99	895.1
195.20	135	1.5	6.0	99.99	174	2.5	6.5	99.99	178	2.5	9.0	99.99	895.4
195.21	140	4.0	8.0	99.99	150	5.3	9.0	99.99	178	7.3	8.5	99.99	896.4
195.22	146	4.0	6.5	99.99	156	5.7	6.5	99.99	146	7.5	10.5	99.99	896.8
195.23	146	4.5	6.5	99.99	156	5.3	10.0	99.99	151	7.5	10.0	99.99	897.9

JULIAN DAY.HR	TEMPERATURES 3 M	10 M	30 M	DELTA TEMPS 10-3	30-3	30-10	STAB CLASS	DEW POINT	REL HUM	PRCP	RADIATION PARAMETERS SW SKY	SW REF	LW SKY	LW REF
195. 0	25.6	25.9	26.0	0.24	0.43	0.03	E	999.9	9999	0.00	0	0	379	456
195. 1	24.9	25.2	25.3	0.27	0.43	0.01	E	999.9	9999	0.00	0	0	375	451
195. 2	24.2	24.6	24.7	0.34	0.54	0.05	E	999.9	9999	0.00	0	0	370	446
195. 3	23.6	23.9	24.0	0.28	0.50	0.06	E	999.9	9999	0.00	0	0	369	443
195. 4	22.6	23.0	23.2	0.34	0.69	0.20	E	999.9	9999	0.00	0	0	366	438
195. 5	22.1	22.5	22.7	0.34	0.58	0.08	E	999.9	9999	0.00	0	0	363	436
195. 6	21.4	21.7	21.8	0.29	0.53	0.08	E	999.9	9999	0.00	6	0	362	432
195. 7	22.6	22.5	22.3	-0.14	-0.19	-0.20	D	999.9	9999	0.00	150	31	369	449
195. 8	25.0	24.3	23.9	-0.65	-0.99	-0.48	A	999.9	9999	0.00	387	78	379	466
195. 9	27.8	27.1	26.6	-0.72	-1.13	-0.56	A	999.9	9999	0.00	615	123	392	506
195.10	30.1	29.1	28.5	-0.97	-1.32	-0.72	A	999.9	9999	0.00	820	160	398	533
195.11	31.4	30.3	29.5	-1.10	-1.83	-0.91	A	999.9	9999	0.00	982	186	413	576
195.12	32.1	31.6	31.3	-0.48	-0.87	-0.35	B	999.9	9999	0.00	1082	203	420	604
195.13	35.6	34.1	33.3	-1.49	-2.24	-0.81	A	999.9	9999	0.00	1123	210	422	615
195.14	35.6	35.1	34.3	-0.56	-1.31	-0.86	A	999.9	9999	0.00	1081	230	493	609
195.15	36.7	35.0	33.7	-1.69	-2.99	-1.44	A	999.9	9999	0.00	932	201	484	600
195.16	37.0	35.9	34.4	-1.08	-2.50	-1.56	A	999.9	9999	0.00	754	166	477	584
195.17	36.7	35.6	34.9	-1.11	-1.78	-0.80	A	999.9	9999	0.00	269	56	472	559
195.18	34.0	33.4	33.1	-0.52	-0.81	-0.41	A	999.9	9999	0.00	102	21	469	513
195.19	33.3	33.1	32.8	-0.22	-0.45	-0.33	C	999.9	9999	0.00	138	35	470	508
195.20	29.8	30.0	30.1	0.26	0.38	-0.01	E	999.9	9999	0.00	0	0	458	475
195.21	29.4	29.6	29.7	0.20	0.38	0.05	E	999.9	9999	0.00	0	0	457	470
195.22	27.9	28.2	28.4	0.27	0.50	0.09	E	999.9	9999	0.00	0	0	441	462
195.23	26.3	26.7	27.0	0.38	0.72	0.22	E	999.9	9999	0.00	0	0	427	452

DAILY SUMMARIES

3 METER TEMP --- AVG = 29.0 MAX = 37.0 MIN = 21.4 AVG DEW POINT = 999.9 TOTAL PRCP = 0.00

10 METER WINDS -- AVG SPEED = 3.4 AVG DIR = 145 PEAK SPEED = 10.0 , OCCURRED DURING HOUR 3

NUMBER OF HOURS PER STABILITY CLASS A = 10 , B = 1, C = 1, D = 1, E = 11, F = 0, G = 0

WIPP METEOROLOGICAL DATA DAILY SUMMARY FOR 7/15/77

JULIAN DAY.HR	3 METER WIND DIR	SPD	PEAK SPD	TURB INT	10 METER WIND DIR	SPD	PEAK SPD	TURB INT	30 METER WIND DIR	SPD	PEAK SPD	TURB INT	BAROM PRESS
196. 0	146	4.5	8.0	99.99	144	6.2	9.5	99.99	151	8.0	9.8	99.99	897.9
196. 1	146	4.0	7.5	99.99	144	5.8	9.0	99.99	151	8.0	9.5	99.99	898.0
196. 2	140	3.5	7.0	99.99	150	5.3	9.0	99.99	151	7.5	10.0	99.99	898.2
196. 3	135	3.5	6.5	99.99	144	5.4	9.0	99.99	135	8.0	10.5	99.99	898.3
196. 4	135	2.5	5.5	99.99	144	4.2	8.5	99.99	135	7.0	10.0	99.99	898.2
196. 5	135	3.0	7.0	99.99	156	6.0	7.5	99.99	135	7.8	9.5	99.99	898.6
196. 6	119	2.5	4.5	99.99	126	2.8	8.5	99.99	122	7.5	9.5	99.99	899.0
196. 7	119	3.5	6.0	99.99	126	3.6	8.5	99.99	124	8.0	9.5	99.99	899.4
196. 8	130	3.0	6.0	99.99	144	4.9	8.0	99.99	130	7.0	10.0	99.99	900.1
196. 9	146	3.5	6.0	99.99	150	4.8	8.0	99.99	146	6.5	9.5	99.99	900.2
196.10	140	3.5	6.0	99.99	144	4.5	7.5	99.99	140	7.5	9.3	99.99	900.2
196.11	135	4.0	8.5	99.99	360	4.4	0.0	99.99	140	6.5	10.3	99.99	900.1
196.12	140	3.0	7.5	99.99	138	4.7	9.0	99.99	130	5.5	9.0	99.99	899.7
196.13	151	4.0	9.0	99.99	156	3.8	8.5	99.99	151	6.0	11.5	99.99	899.1
196.14	157	2.5	9.0	99.99	144	3.6	10.0	99.99	157	6.0	11.0	99.99	898.4
196.15	130	3.0	7.5	99.99	132	3.6	10.0	99.99	151	5.0	10.0	99.99	897.9
196.16	146	4.0	8.5	99.99	168	4.9	9.0	99.99	140	7.8	11.5	99.99	897.2
196.17	135	3.0	7.5	99.99	138	3.3	11.5	99.99	135	6.3	10.5	99.99	896.9
196.18	124	2.5	6.5	99.99	156	3.4	9.0	99.99	140	6.0	9.5	99.99	896.4
196.19	130	3.0	6.0	99.99	138	3.7	9.0	99.99	132	5.0	8.5	99.99	896.4
196.20	140	2.0	6.5	99.99	144	4.0	8.0	99.99	151	4.8	8.5	99.99	896.8
196.21	130	1.5	3.5	99.99	138	2.6	8.5	99.99	146	5.0	6.0	99.99	897.5
196.22	124	0.5	1.5	99.99	132	1.0	5.5	99.99	140	5.5	6.3	99.99	898.3
196.23	140	1.5	3.0	99.99	138	3.3	4.5	99.99	151	5.5	6.5	99.99	899.0

JULIAN DAY.HR	TEMPERATURES 3 M	10 M	30 M	DELTA TEMPS 10-3	30-3	30-10	STAB CLASS	DEW POINT	REL HUM	PRCP	RADIATION PARAMETERS SW SKY	SW REF	LW SKY	LW REF
196. 0	25.5	25.8	26.0	0.28	0.51	0.10	E	999.9	9999	0.00	0	0	423	446
196. 1	24.5	24.7	25.0	0.26	0.56	0.16	E	999.9	9999	0.00	0	0	418	440
196. 2	23.7	23.9	24.1	0.24	0.47	-0.32	C	999.9	9999	0.00	0	0	417	435
196. 3	22.9	23.1	23.2	0.23	0.42	0.03	E	999.9	9999	0.00	0	0	413	432
196. 4	21.9	22.2	22.4	0.29	0.56	0.12	E	999.9	9999	0.00	0	0	409	426
196. 5	22.1	22.3	22.4	0.18	0.31	-0.02	E	999.9	9999	0.00	0	0	414	426
196. 6	20.9	21.1	21.2	0.22	0.40	0.06	E	999.9	9999	0.00	4	0	433	424
196. 7	21.9	21.7	21.5	-0.23	-0.38	-0.31	C	999.9	9999	0.00	144	35	411	434
196. 8	23.6	22.9	22.4	-0.65	-1.07	-0.54	A	999.9	9999	0.00	359	83	421	454
196. 9	25.8	24.8	24.9	-0.90	-1.48	-0.73	A	999.9	9999	0.00	566	129	426	482
196.10	27.7	26.7	25.9	-1.03	-1.78	-0.89	A	999.9	9999	0.00	758	169	441	522
196.11	29.9	28.8	27.6	-1.15	-2.19	-1.20	A	999.9	9999	0.00	909	196	444	544
196.12	30.8	30.4	29.7	-0.44	-1.10	-0.80	A	999.9	9999	0.00	999	213	451	572
196.13	33.2	32.1	31.2	-1.08	-1.89	-0.97	A	999.9	9999	0.00	1023	216	472	612
196.14	33.3	32.8	31.8	-0.53	-1.44	-1.05	A	999.9	9999	0.00	998	212	470	611
196.15	34.7	33.3	32.3	-1.40	-2.35	-1.10	A	999.9	9999	0.00	891	194	463	594
196.16	34.8	33.4	32.6	-1.37	-2.08	-0.86	A	999.9	9999	0.00	746	166	452	564
196.17	34.7	33.8	32.8	-0.98	-1.83	-1.00	A	999.9	9999	0.00	557	127	459	563
196.18	33.8	32.8	32.2	-0.98	-1.54	-0.72	A	999.9	9999	0.00	347	80	451	526
196.19	32.7	32.1	31.7	-0.58	-0.92	-0.49	A	999.9	9999	0.00	139	35	452	503
196.20	29.7	29.9	30.1	0.24	0.46	0.08	E	999.9	9999	0.00	0	0	441	471
196.21	27.0	27.7	28.4	0.71	1.44	0.60	F	999.9	9999	0.00	0	0	438	459
196.22	25.0	25.7	26.9	0.70	2.00	1.14	G	999.9	9999	0.00	0	0	432	447
196.23	25.0	25.6	26.3	0.59	1.36	0.61	F	999.9	9999	0.00	0	0	434	447

DAILY SUMMARIES

3 METER TEMP --- AVG = 27.7 MAX = 34.8 MIN = 20.9 AVG DEW POINT = 999.9 TOTAL PRCP = 0.00

10 METER WINDS -- AVG SPEED = 3.8 AVG DIR = 143 PEAK SPEED = 11.5 , OCCURRED DURING HOUR 17

NUMBER OF HOURS PER STABILITY CLASS A = 12 , B = 0, C = 2, D = 0, E = 7, F = 2, G = 1

WIPP METEOROLOGICAL DATA DAILY SUMMARY FOR 7/16/77

JULIAN DAY.HR	3 METER WIND DIR	SPD	PEAK SPD	TURB INT	10 METER WIND DIR	SPD	PEAK SPD	TURB INT	30 METER WIND DIR	SPD	PEAK SPD	TURB INT	BAROM PRESS
197. 0	146	2.0	5.0	99.99	144	4.0	5.0	99.99	157	5.5	7.0	99.99	899.0
197. 1	135	1.0	4.5	99.99	144	2.7	6.0	99.99	157	4.8	6.5	99.99	899.0
197. 2	140	1.5	3.0	99.99	150	3.7	6.0	99.99	157	5.5	6.0	99.99	899.0
197. 3	135	1.0	2.5	99.99	126	2.4	4.5	99.99	157	5.3	7.0	99.99	899.0
197. 4	130	1.0	2.0	99.99	132	0.9	5.0	99.99	146	5.0	6.0	99.99	899.0
197. 5	140	1.5	2.5	99.99	132	3.2	4.0	99.99	146	5.5	6.8	99.99	899.4
197. 6	135	1.5	2.5	99.99	138	2.4	3.5	99.99	140	5.8	6.8	99.99	899.8
197. 7	135	2.0	3.5	99.99	144	3.0	4.0	99.99	146	4.5	6.5	99.99	900.2
197. 8	151	5.0	7.5	99.99	150	6.3	5.0	99.99	162	6.5	9.0	99.99	900.5
197. 9	157	4.0	7.0	99.99	162	5.4	3.5	99.99	167	6.0	8.0	99.99	900.5
197.10	157	4.0	6.5	99.99	210	5.6	3.0	99.99	162	5.5	8.5	99.99	900.5
197.11	162	4.5	9.0	99.99	156	4.8	7.0	99.99	143	5.0	10.3	99.99	900.4
197.12	124	3.5	8.5	99.99	102	3.6	10.5	99.99	130	6.5	9.8	99.99	900.3
197.13	130	2.0	7.5	99.99	126	2.6	9.5	99.99	135	5.3	8.8	99.99	899.7
197.14	124	3.0	7.5	99.99	138	3.9	9.0	99.99	130	3.5	10.0	99.99	899.0
197.15	157	3.0	8.5	99.99	144	3.9	10.0	99.99	124	3.5	10.5	99.99	898.4
197.16	184	4.0	8.0	99.99	180	4.8	10.5	99.99	189	4.5	8.5	99.99	897.6
197.17	140	1.5	6.5	99.99	144	1.4	9.0	99.99	135	4.5	11.5	99.99	897.1
197.18	130	1.0	5.0	99.99	156	1.8	11.0	99.99	140	1.5	7.0	99.99	896.6
197.19	130	2.0	4.5	99.99	138	3.0	6.0	99.99	124	4.3	6.8	99.99	896.4
197.20	124	0.8	3.5	99.99	120	0.7	4.0	99.99	124	3.5	7.0	99.99	896.4
197.21	124	1.0	2.0	99.99	120	1.0	5.0	99.99	135	6.0	6.0	99.99	896.9
197.22	124	1.5	2.0	99.99	126	0.9	3.5	99.99	140	6.3	7.0	99.99	897.6
197.23	130	1.0	2.5	99.99	126	0.9	3.0	99.99	140	6.5	7.5	99.99	897.9

JULIAN DAY.HR	TEMPERATURES 3 M	10 M	30 M	DELTA TEMPS 10-3	30-3	30-10	STAB CLASS	DEW POINT	REL HUM	PRCP	RADIATION PARAMETERS SW SKY	SW REF	LW SKY	LW REF
197. 0	24.5	25.0	25.5	0.50	1.06	0.40	F	999.9	9999	0.00	0	0	423	441
197. 1	22.4	23.1	24.1	0.67	1.68	0.85	G	999.9	9999	0.00	0	0	414	429
197. 2	21.4	22.4	23.5	1.00	2.22	1.05	G	999.9	9999	0.00	0	0	411	425
197. 3	20.4	21.3	23.1	0.82	2.74	1.75	G	999.9	9999	0.00	0	0	408	418
197. 4	19.7	20.9	22.4	1.11	2.69	1.43	G	999.9	9999	0.00	0	0	407	416
197. 5	20.0	20.9	22.0	0.84	2.09	1.10	G	999.9	9999	0.00	0	0	407	417
197. 6	19.6	20.4	21.2	0.73	1.63	0.77	F	999.9	9999	0.00	3	0	405	415
197. 7	22.1	22.1	22.0	-0.10	-0.10	-0.18	D	999.9	9999	0.00	131	32	416	436
197. 8	24.9	24.4	24.1	-0.49	-0.73	-0.42	A	999.9	9999	0.00	348	80	428	456
197. 9	27.3	26.4	25.9	-0.86	-1.28	-0.60	A	999.9	9999	0.00	554	126	438	487
197.10	29.5	28.4	27.8	-1.10	-1.68	-0.76	A	999.9	9999	0.00	739	164	453	533
197.11	30.7	29.9	28.7	-0.81	-1.92	-1.26	A	999.9	9999	0.00	895	194	464	565
197.12	31.9	31.3	30.0	-0.60	-1.82	-1.38	A	999.9	9999	0.00	1041	223	473	582
197.13	34.5	33.2	31.5	-1.33	-3.02	-1.87	A	999.9	9999	0.00	1146	246	494	625
197.14	34.1	33.3	31.8	-0.79	-2.24	-1.62	A	999.9	9999	0.00	1070	229	479	613
197.15	34.9	34.1	32.8	-0.90	-2.08	-1.36	A	999.9	9999	0.00	922	203	466	595
197.16	35.0	33.4	32.9	-1.64	-1.99	-0.52	A	999.9	9999	0.00	789	178	473	585
197.17	33.6	33.0	32.3	-0.57	-1.18	-0.78	A	999.9	9999	0.00	286	63	456	530
197.18	34.1	33.3	32.7	-0.80	-1.27	-0.63	A	999.9	9999	0.00	360	84	465	537
197.19	33.3	32.7	32.1	-0.60	-1.07	-0.64	A	999.9	9999	0.00	139	34	453	502
197.20	29.7	29.8	30.2	0.12	0.56	0.28	E	999.9	9999	0.00	0	0	439	468
197.21	25.9	26.9	28.4	0.98	2.63	1.46	G	999.9	9999	0.00	0	0	432	455
197.22	25.0	26.0	27.7	0.90	2.77	1.72	G	999.9	9999	0.00	0	0	426	448
197.23	24.0	25.0	27.0	0.98	3.00	1.86	G	999.9	9999	0.00	0	0	422	441

DAILY SUMMARIES

3 METER TEMP --- AVG = 27.4 MAX = 35.0 MIN = 19.6 AVG DEW POINT = 999.9 TOTAL PRCP = 0.00

10 METER WINDS -- AVG SPEED = 2.8 AVG DIR = 148 PEAK SPEED = 11.0 , OCCURRED DURING HOUR 18

NUMBER OF HOURS PER STABILITY CLASS A = 12 , B = 0, C = 0, D = 1, E = 1, F = 2, G = 8

WIPP METEOROLOGICAL DATA DAILY SUMMARY FOR 7/17/77

JULIAN DAY.HR	3 METER WIND DIR	SPD	PEAK SPD	TURB INT	10 METER WIND DIR	SPD	PEAK SPD	TURB INT	30 METER WIND DIR	SPD	PEAK SPD	TURB INT	BAROM PRESS
198. 0	124	1.5	3.0	99.99	114	1.3	3.0	99.99	130	6.5	8.0	99.99	898.0
198. 1	135	2.5	4.5	99.99	126	3.0	4.5	99.99	135	7.5	8.5	99.99	898.0
198. 2	135	2.5	5.0	99.99	132	3.3	5.5	99.99	140	6.5	9.0	99.99	898.0
198. 3	130	1.5	4.0	99.99	120	1.8	7.0	99.99	135	6.8	8.0	99.99	898.0
198. 4	135	2.0	4.0	99.99	138	4.4	4.0	99.99	140	6.5	7.8	99.99	897.5
198. 5	135	1.0	2.0	99.99	144	2.3	3.5	99.99	140	5.5	7.3	99.99	897.6
198. 6	130	1.5	3.0	99.99	120	1.7	5.0	99.99	135	6.5	7.0	99.99	898.0
198. 7	130	1.0	2.0	99.99	126	1.5	3.0	99.99	135	5.0	7.3	99.99	898.4
198. 8	135	3.0	4.5	99.99	132	3.7	4.0	99.99	140	5.0	7.5	99.99	898.7
198. 9	140	2.5	4.5	99.99	144	3.1	6.5	99.99	157	4.0	6.0	99.99	899.0
198.10	173	3.5	5.0	99.99	168	4.2	5.5	99.99	173	5.5	7.3	99.99	899.0
198.11	173	3.0	5.5	99.99	186	3.1	6.5	99.99	184	5.5	6.5	99.99	898.6
198.12	146	3.0	7.5	99.99	132	2.6	6.0	99.99	140	4.0	8.0	99.99	898.3
198.13	135	3.0	7.5	99.99	192	3.1	8.0	99.99	119	4.8	8.5	99.99	897.6
198.14	130	3.5	7.5	99.99	144	3.2	9.0	99.99	140	5.5	7.8	99.99	896.9
198.15	173	3.0	7.0	99.99	180	3.2	8.0	99.99	173	2.0	10.5	99.99	896.4
198.16	184	4.0	7.5	99.99	162	4.7	9.5	99.99	9999	4.0	8.8	99.99	895.8
198.17	124	3.5	7.5	99.99	138	3.8	9.5	99.99	9999	4.8	9.0	99.99	895.3
198.18	162	2.5	7.0	99.99	150	3.9	9.5	99.99	9999	3.3	8.3	99.99	894.6
198.19	146	3.0	5.5	99.99	150	4.0	8.0	99.99	9999	5.3	6.3	99.99	894.4
198.20	135	2.0	6.5	99.99	138	3.6	6.0	99.99	9999	5.8	8.5	99.99	894.8
198.21	113	1.0	2.5	99.99	114	0.8	9.0	99.99	9999	5.0	6.0	99.99	895.3
198.22	124	0.8	2.0	99.99	126	1.3	5.5	99.99	9999	5.3	6.3	99.99	896.1
198.23	124	2.0	3.5	99.99	138	1.8	4.5	99.99	9999	7.0	8.3	99.99	896.3

JULIAN DAY.HR	TEMPERATURES 3 M	10 M	30 M	DELTA TEMPS 10-3	30-3	30-10	STAB CLASS	DEW POINT	REL HUM	PRCP	RADIATION PARAMETERS SW SKY	SW REF	LW SKY	LW REF
198. 0	23.7	24.4	25.8	0.72	2.18	1.27	G	999.9	9999	0.00	0	0	420	437
198. 1	24.2	24.8	25.3	0.62	1.17	0.35	F	999.9	9999	0.00	0	0	423	443
198. 2	23.9	24.4	24.7	0.46	0.84	0.18	E	999.9	9999	0.00	0	0	419	435
198. 3	22.4	22.9	23.5	0.55	1.28	0.57	F	999.9	9999	0.00	0	0	413	428
198. 4	22.0	22.6	23.1	0.52	1.13	0.46	F	999.9	9999	0.00	0	0	414	428
198. 5	20.9	21.5	22.4	0.62	1.64	0.87	G	999.9	9999	0.00	0	0	409	420
198. 6	20.7	21.3	22.1	0.64	1.50	0.69	F	999.9	9999	0.00	3	0	411	423
198. 7	22.2	22.2	22.2	-0.05	0.04	-0.09	E	999.9	9999	0.00	126	31	417	436
198. 8	25.2	24.6	24.2	-0.56	-0.85	-0.46	A	999.9	9999	0.00	337	79	428	457
198. 9	28.4	27.6	27.2	-0.79	-1.12	-0.52	A	999.9	9999	0.00	542	124	445	501
198.10	30.8	29.8	29.2	-0.99	-1.48	-0.67	A	999.9	9999	0.00	730	162	453	534
198.11	32.4	31.6	30.6	-0.79	-1.72	-1.11	A	999.9	9999	0.00	886	192	470	574
198.12	32.7	32.4	31.6	-0.30	-1.06	-0.95	A	999.9	9999	0.00	997	213	470	587
198.13	34.1	32.9	31.7	-1.22	-2.36	-1.35	A	999.9	9999	0.00	1063	225	480	603
198.14	34.3	33.7	32.6	-0.62	-1.72	-1.27	A	999.9	9999	0.00	1048	226	487	609
198.15	35.1	34.1	33.4	-0.97	-1.59	-0.80	A	999.9	9999	0.00	903	199	47[illegible]	598
198.16	35.9	34.1	33.4	-1.80	-2.39	-0.76	A	999.9	9999	0.00	782	177	480	584
198.17	34.7	33.8	33.0	-0.84	-1.57	-0.89	A	999.9	9999	0.00	545	127	470	558
198.18	34.4	33.6	33.1	-0.88	-1.23	-0.52	A	999.9	9999	0.00	329	78	465	531
198.19	32.9	32.5	32.3	-0.36	-0.55	-0.36	B	999.9	9999	0.00	125	32	459	505
198.20	30.4	30.6	30.7	0.19	0.36	0.00	E	999.9	9999	0.00	0	0	449	478
198.21	27.3	28.0	28.7	0.68	1.56	0.70	F	999.9	9999	0.00	0	0	443	461
198.22	26.0	27.2	28.3	1.19	2.37	1.00	G	999.9	9999	0.00	0	0	435	451
198.23	25.6	26.3	26.8	0.63	1.30	0.47	F	999.9	9999	0.00	0	0	430	448

DAILY SUMMARIES

3 METER TEMP --- AVG = 28.3 MAX = 35.9 MIN = 20.7 AVG DEW POINT = 999.9 TOTAL PRCP = 0.00

10 METER WINDS -- AVG SPEED = 2.7 AVG DIR = 146 PEAK SPEED = 9.5 , OCCURRED DURING HOUR 16

NUMBER OF HOURS PER STABILITY CLASS A = 11 , B = 1, C = 0, D = 0, E = 3, F = 6, G = 3

MET 12/77-2/78

********** WIPP METEOROLOGICAL DATA DAILY SUMMARY **********

DIR = VECTOR AVERAGE DIRECTION FROM WHICH THE WIND IS BLOWING, IN DEGREES

TURB INT = WIND TURBULANCE INTENSITY, IN RADIANS

SPD = VECTOR AVERAGE WIND SPEED, IN METERS PER SECOND

PEAK SPD = PEAK WIND SPEED WHICH OCCURRED DURING PERIOD, IN METERS PER SECOND

BAROM PRESS = BAROMETRIC PRESSURE, IN MILLIBARS

TEMPERATURES = AMBIENT TEMPERATURES AT INDICATED LEVEL, IN DEGREES CELSIUS

DELTA TEMPS = TEMPERATURE DIFFERENCES BETWEEN INDICATED LEVELS, IN DEGREES CELSIUS

STAB CLASS = PASQUILL CATEGORY DETERMINED FROM THE 30M-10M DELTA TEMPERATURE

DEW POINT = DEW POINT, IN DEGREES CELSIUS

REL HUM = RELATIVE HUMIDITY, IN PER CENT

PRCP = PRECIPATION AMOUNT DURING PERIOD, IN CENTIMETERS

SW SKY = SHORT WAVE SKY RADIATION, IN WATTS PER SQUARE METER

SW REF = SHORT WAVE REFLECTED RADIATION, IN WATTS PER SQUARE METER

LW SKY = LONG WAVE SKY RADIATION, IN WATTS PER SQUARE METER

LW REF = LONG WAVE REFLECTED RADIATION, IN WATTS PER SQUARE METER

FOUR 9'S INDICATE MISSING DATA

****

WIPP METEOROLOGICAL DATA DAILY SUMMARY FOR 12/ 1/77

JULIAN DAY.HR	3 METER WIND DIR	SPD	PEAK SPD	TURB INT	10 METER WIND DIR	SPD	PEAK SPD	TURB INT	30 METER WIND DIR	SPD	PEAK SPD	TURB INT	BAROM PRESS
335. 0	5	1.0	2.4	0.70	4	1.4	2.9	0.68	21	1.8	4.3	0.51	894.2
335. 1	349	1.1	1.9	0.31	340	1.9	3.7	0.21	345	2.4	4.2	0.29	894.5
335. 2	57	1.2	1.8	0.36	27	1.8	2.6	0.35	17	2.6	3.3	0.19	894.5
335. 3	87	0.8	1.4	0.50	98	0.7	2.0	1.06	105	0.6	1.9	1.41	894.3
335. 4	116	1.1	2.0	0.15	136	1.7	3.4	0.09	161	2.3	3.2	0.09	893.8
335. 5	112	1.1	2.0	0.30	132	1.1	3.8	0.24	155	3.1	4.2	0.12	893.4
335. 6	134	1.2	2.5	0.10	136	2.7	5.3	0.06	159	4.8	6.3	0.05	893.6
335. 7	143	1.8	2.9	0.28	146	3.3	5.3	0.14	162	6.2	7.6	0.07	894.0
335. 8	252	0.2	2.4	4.26	186	0.5	4.2	2.31	175	1.6	5.7	0.59	895.1
335. 9	200	1.6	4.5	0.34	198	1.8	5.0	0.31	202	2.0	5.0	0.27	895.3
335.10	205	3.7	6.2	0.22	204	4.3	6.4	0.18	206	4.8	7.0	0.16	895.3
335.11	241	3.3	5.7	0.48	239	4.0	6.9	0.47	239	4.5	7.6	0.43	894.8
335.12	298	3.1	5.8	0.40	296	3.7	6.8	0.35	295	4.3	7.5	0.34	893.3
335.13	282	3.3	9.8	0.62	281	4.1	12.6	0.57	281	4.8	13.0	0.49	892.6
335.14	325	6.9	10.8	0.18	320	8.9	12.9	0.16	319	10.4	14.5	0.15	892.3
335.15	322	5.8	8.9	0.19	318	7.5	11.1	0.15	316	8.7	12.7	0.13	892.7
335.16	337	4.7	7.6	0.18	333	6.1	9.4	0.16	329	7.3	10.6	0.15	893.0
335.17	335	2.7	5.1	0.16	330	3.9	6.7	0.13	328	5.5	7.9	0.10	893.3
335.18	335	0.5	1.7	0.59	312	1.3	2.4	0.29	328	2.3	4.3	0.15	894.1
335.19	343	0.9	2.0	0.32	315	2.1	3.2	0.18	314	2.7	4.1	0.25	894.5
335.20	122	0.8	1.7	0.65	166	2.0	5.0	0.52	216	2.6	4.2	0.50	894.8
335.21	128	1.2	2.1	0.24	150	3.1	4.0	0.15	186	3.2	4.1	0.12	894.8
335.22	118	1.0	1.5	0.16	146	3.2	3.8	0.10	184	2.6	3.3	0.11	894.6
335.23	127	1.0	2.1	0.28	153	3.0	4.6	0.15	193	3.3	5.4	0.25	894.1

JULIAN DAY.HR	TEMPERATURES 3 M	10 M	30 M	DELTA TEMPS 10-3	30-3	30-10	STAB CLASS	DEW POINT	REL HUM	PRCP	RADIATION PARAMETERS SW SKY	SW REF	LW SKY	LW REF
335. 0	3.8	4.6	4.8	0.81	1.01	0.17	E	-3.0	64	0.00	0	0	302	9999
335. 1	2.1	3.8	4.2	1.66	2.13	0.45	F	-3.8	69	0.00	0	0	269	9999
335. 2	-0.5	2.5	3.7	3.05	4.26	1.18	G	-5.7	72	0.00	0	0	244	9999
335. 3	-1.8	2.3	3.3	4.12	5.18	1.01	G	-5.4	76	0.00	0	0	247	9999
335. 4	-1.1	1.8	3.3	2.99	4.54	1.52	G	-4.0	78	0.00	0	0	257	9999
335. 5	-0.5	1.6	3.1	2.01	3.57	1.52	G	-3.9	78	0.00	0	0	262	9999
335. 6	-0.5	0.4	2.6	0.90	3.11	2.18	G	-3.6	79	0.00	0	0	254	9999
335. 7	-0.5	0.3	2.7	0.76	3.18	2.39	G	-3.4	77	0.00	3	1	243	9999
335. 8	1.1	1.3	1.8	0.14	0.71	0.54	F	-1.5	77	0.00	106	28	249	9999
335. 9	3.8	3.6	3.5	-0.15	-0.27	-0.15	D	-0.5	67	0.00	289	71	255	9999
335.10	7.0	6.6	6.2	-0.43	-0.84	-0.43	A	-0.6	54	0.00	461	113	263	9999
335.11	9.1	8.6	8.1	-0.51	-0.99	-0.51	A	-3.4	39	0.00	580	140	268	9999
335.12	10.7	10.2	9.7	-0.56	-1.04	-0.51	A	-6.7	27	0.00	631	152	269	9999
335.13	12.1	11.6	11.1	-0.49	-0.96	-0.51	A	-12.7	14	0.00	604	146	274	9999
335.14	13.5	12.9	12.3	-0.58	-1.09	-0.55	A	-13.7	14	0.00	540	152	259	9999
335.15	13.4	12.9	12.4	-0.46	-0.90	-0.46	A	-14.0	14	0.00	392	98	258	9999
335.16	12.9	12.7	12.4	-0.21	-0.48	-0.30	C	-15.1	13	0.00	9999	52	253	9999
335.17	11.0	11.5	11.8	0.46	0.78	0.28	E	-19.3	12	0.00	29	7	248	9999
335.18	7.4	9.9	10.7	2.54	3.36	0.77	F	-18.8	13	0.00	0	0	251	9999
335.19	6.3	9.8	10.8	3.46	4.52	1.01	G	-18.5	16	0.00	0	0	261	9999
335.20	2.7	6.8	9.4	4.05	6.67	2.57	G	-17.2	21	0.00	0	0	247	9999
335.21	2.8	6.4	7.9	3.68	5.22	1.50	G	-16.8	21	0.00	0	0	246	9999
335.22	2.6	6.7	8.0	4.16	5.43	1.22	G	-16.6	23	0.00	0	0	249	9999
335.23	2.2	6.5	8.5	4.30	6.37	2.03	G	-16.5	23	0.00	0	0	249	9999

DAILY SUMMARIES

3 METER TEMP --- AVG = 5.0 MAX = 13.5 MIN = -1.8 AVG DEW POINT = -9.4 TOTAL PRCP = 0.00

10 METER WINDS -- AVG SPEED = 0.8 AVG DIR = 287 PEAK SPEED = 12.9 , OCCURRED DURING HOUR 14

NUMBER OF HOURS PER STABILITY CLASS A = 6 , B = 0, C = 1, D = 1, E = 8, F = 3, G = 11

WIPP METEOROLOGICAL DATA DAILY SUMMARY FOR 12/ 2/77

JULIAN DAY.HR	3 METER WIND DIR	SPD	PEAK SPD	TURB INT	10 METER WIND DIR	SPD	PEAK SPD	TURB INT	30 METER WIND DIR	SPD	PEAK SPD	TURB INT	BAROM PRESS
336. 0	149	1.5	2.7	0.26	157	3.4	5.8	0.13	175	5.9	7.4	0.09	893.4
336. 1	164	1.8	2.6	0.13	165	3.6	4.3	0.08	179	6.0	7.5	0.09	893.0
336. 2	158	1.4	2.1	0.19	166	3.1	3.9	0.07	190	4.7	5.9	0.07	892.6
336. 3	145	1.4	2.2	0.14	160	3.3	4.1	0.05	185	3.9	4.6	0.06	892.1
336. 4	133	0.9	1.8	0.15	164	2.5	3.6	0.14	203	2.7	3.8	0.25	891.5
336. 5	126	1.1	2.3	0.28	159	2.3	3.3	0.23	201	2.2	3.3	0.30	891.3
336. 6	117	1.0	1.9	0.28	148	2.4	3.2	0.15	182	1.9	3.1	0.13	891.5
336. 7	102	0.7	1.5	0.44	152	1.9	2.8	0.19	201	1.6	2.6	0.25	891.9
336. 8	147	0.9	1.6	0.29	163	1.7	2.6	0.13	205	1.8	2.7	0.17	892.2
336. 9	234	1.4	2.9	0.45	235	1.7	3.5	0.41	240	2.1	3.8	0.30	892.6
336.10	247	2.4	4.7	0.32	244	2.8	5.5	0.31	246	3.3	6.1	0.26	892.7
336.11	262	4.0	6.3	0.18	260	4.9	7.0	0.15	261	5.6	8.2	0.11	892.6
336.12	275	4.8	7.2	0.19	273	5.9	8.1	0.15	271	6.8	9.1	0.12	891.4
336.13	276	4.9	7.4	0.24	274	5.9	8.1	0.23	273	6.9	8.9	0.20	890.6
336.14	278	4.5	6.3	0.20	276	5.6	7.7	0.16	275	6.6	8.4	0.13	890.3
336.15	268	4.4	6.6	0.18	266	5.6	8.2	0.18	266	6.5	9.7	0.15	890.0
336.16	261	3.8	6.1	0.13	260	4.9	8.0	0.11	260	6.1	9.1	0.09	890.2
336.17	252	2.1	3.9	0.37	249	3.2	5.4	0.33	249	5.2	7.6	0.28	890.5
336.18	223	2.3	3.5	0.19	223	4.0	5.2	0.16	229	6.3	8.1	0.14	890.5
336.19	211	0.9	2.3	0.85	228	2.3	4.1	0.40	239	4.8	6.1	0.15	890.7
336.20	5	0.6	2.0	1.13	291	1.3	3.7	0.44	270	3.6	6.7	0.40	890.7
336.21	28	0.2	2.5	4.00	300	0.9	3.5	0.82	295	2.4	5.2	0.33	891.9
336.22	69	0.3	1.4	1.27	315	0.5	1.8	0.78	291	2.1	4.1	0.26	891.9
336.23	62	0.8	1.8	0.47	357	0.5	1.7	1.10	297	2.2	4.4	0.49	891.7

JULIAN DAY.HR	TEMPERATURES 3 M	10 M	30 M	DELTA TEMPS 10-3	30-3	30-10	STAB CLASS	DEW POINT	REL HUM	PRCP	RADIATION PARAMETERS SW SKY	SW REF	LW SKY	LW REF
336. 0	3.1	5.3	7.8	2.15	4.71	2.52	G	-16.1	22	0.00	0	0	253	9999
336. 1	3.4	4.7	6.5	1.27	3.17	1.86	G	-16.0	23	0.00	0	0	253	9999
336. 2	2.6	4.2	6.1	1.66	3.61	1.91	G	-15.9	25	0.00	0	0	255	9999
336. 3	2.1	4.1	5.5	1.99	3.43	1.40	G	-15.3	26	0.00	0	0	262	9999
336. 4	2.3	4.9	6.2	2.64	3.93	1.24	G	-15.2	26	0.00	0	0	260	9999
336. 5	2.3	5.6	6.4	3.30	4.11	0.77	F	-14.7	26	0.00	0	0	259	9999
336. 6	2.1	6.6	7.2	4.50	5.18	0.63	F	-14.4	28	0.00	0	0	258	9999
336. 7	2.3	6.1	7.5	3.76	5.22	1.42	G	-14.0	29	0.00	4	1	261	9999
336. 8	5.5	7.2	8.1	1.78	2.71	0.88	G	-11.3	23	0.00	123	32	276	9999
336. 9	10.2	10.1	9.9	-0.08	-0.21	-0.17	D	-12.7	18	0.00	216	51	304	9999
336.10	12.3	12.1	11.9	-0.18	-0.42	-0.27	D	-10.8	16	0.00	383	79	381	9999
336.11	15.4	15.1	14.7	-0.28	-0.63	-0.38	B	-9.3	16	0.00	389	122	444	9999
336.12	18.6	18.2	17.7	-0.41	-0.85	-0.48	A	-8.0	15	0.00	506	115	384	9999
336.13	20.0	19.7	19.2	-0.37	-0.83	-0.49	A	-7.6	15	0.00	431	96	311	9999
336.14	20.9	20.6	20.2	-0.32	-0.68	-0.40	A	-7.4	14	0.00	354	78	322	9999
336.15	20.8	20.6	20.3	-0.18	-0.45	-0.31	C	-7.5	15	0.00	228	49	326	9999
336.16	19.6	19.7	19.6	0.06	-0.00	-0.09	E	-6.8	17	0.00	101	19	312	9999
336.17	16.9	17.5	18.1	0.68	1.31	0.60	F	-8.4	19	0.00	10	1	276	9999
336.18	13.5	14.8	16.0	1.33	2.61	1.25	G	-8.8	22	0.00	0	0	278	9999
336.19	11.2	12.8	14.6	1.66	3.44	1.75	G	-9.0	25	0.00	0	0	265	9999
336.20	10.0	12.4	14.0	2.37	4.04	1.64	G	-8.1	26	0.00	0	0	264	9999
336.21	10.3	12.3	13.2	1.98	2.87	0.85	G	-9.2	32	0.00	0	0	265	9999
336.22	10.3	12.5	13.0	2.11	2.73	0.58	F	-8.1	27	0.00	0	0	264	9999
336.23	10.9	12.7	13.5	1.78	2.63	0.80	G	-8.8	25	0.00	0	0	266	9999

DAILY SUMMARIES

3 METER TEMP --- AVG = 10.3 MAX = 20.0 MIN = 2.1 AVG DEW POINT = -11.0 TOTAL PRCP = 0.00

10 METER WINDS -- AVG SPEED = 2.0 AVG DIR = 232 PEAK SPEED = 8.2 , OCCURRED DURING HOUR 15

NUMBER OF HOURS PER STABILITY CLASS A = 3 , B = 1, C = 1, D = 2, E = 1, F = 4, G = 12

WIPP METEOROLOGICAL DATA DAILY SUMMARY FOR 12/ 3/77

JULIAN DAY.HR	3 METER WIND DIR	SPD	PEAK SPD	TURB INT	10 METER WIND DIR	SPD	PEAK SPD	TURB INT	30 METER WIND DIR	SPD	PEAK SPD	TURB INT	BAROM PRESS
337. 0	2	1.4	2.8	0.61	318	2.6	5.0	0.20	292	5.1	8.2	0.09	891.1
337. 1	157	0.7	3.0	1.41	186	1.2	5.0	1.56	216	1.5	6.9	1.37	890.8
337. 2	100	1.1	2.2	0.56	126	1.3	5.4	0.45	186	3.6	5.6	0.11	890.6
337. 3	114	0.9	1.6	0.37	144	3.2	4.2	0.10	168	3.6	4.7	0.11	890.8
337. 4	127	0.9	1.5	0.15	147	3.1	4.6	0.12	181	3.8	5.3	0.20	890.4
337. 5	75	1.1	1.8	0.34	140	1.9	3.2	0.14	180	2.1	2.9	0.25	890.4
337. 6	60	1.2	2.0	0.37	135	0.9	3.6	0.31	222	0.6	2.6	1.69	890.5
337. 7	68	1.2	2.8	0.48	31	1.0	2.5	0.75	336	2.0	3.5	0.25	890.5
337. 8	57	0.3	2.3	0.82	16	0.6	2.9	0.49	342	1.5	3.9	0.35	891.3
337. 9	342	2.6	5.6	0.28	335	3.2	6.6	0.24	329	3.7	7.9	0.23	891.9
337.10	318	2.9	5.2	0.50	315	3.7	6.3	0.46	311	4.3	6.8	0.44	892.0
337.11	283	3.6	5.3	0.24	281	4.4	6.4	0.19	280	4.9	7.1	0.16	891.5
337.12	266	4.4	6.3	0.29	264	5.3	7.8	0.27	264	5.9	8.4	0.22	890.4
337.13	277	3.3	5.4	0.30	276	3.8	5.9	0.28	275	4.4	6.3	0.22	889.4
337.14	277	3.7	6.9	0.40	275	4.6	8.0	0.37	274	5.2	8.7	0.34	888.9
337.15	259	3.3	5.8	0.35	257	4.0	6.5	0.33	257	4.7	7.3	0.30	888.7
337.16	280	3.0	4.9	0.29	278	3.8	5.7	0.27	276	4.6	6.5	0.23	888.5
337.17	291	2.3	4.5	0.18	288	3.5	5.6	0.14	286	4.9	6.8	0.12	888.6
337.18	327	1.2	1.9	0.19	302	2.4	3.5	0.15	291	4.0	5.2	0.10	889.0
337.19	330	0.5	2.4	1.00	286	1.7	3.8	0.35	271	3.9	5.9	0.21	889.4
337.20	318	1.3	2.2	0.21	292	2.7	4.5	0.12	275	4.9	6.4	0.07	889.4
337.21	275	0.0	1.8	6.28	271	1.6	2.8	0.55	264	3.9	5.2	0.19	889.7
337.22	136	0.7	1.7	0.38	195	1.7	2.5	0.20	227	2.8	3.9	0.19	889.8
337.23	66	1.0	2.0	0.48	215	0.1	2.2	4.93	283	1.2	4.1	0.82	889.6

JULIAN DAY.HR	TEMPERATURES 3 M	10 M	30 M	DELTA TEMPS 10-3	30-3	30-10	STAB CLASS	DEW POINT	REL HUM	PRCP	RADIATION PARAMETERS SW SKY	SW REF	LW SKY	LW REF
337. 0	9.7	13.1	15.1	3.41	5.47	2.01	G	-7.9	25	0.00	0	0	268	9999
337. 1	9.2	12.0	13.3	2.73	4.12	1.35	G	-8.0	31	0.00	0	0	265	9999
337. 2	7.4	9.6	12.9	2.12	5.52	3.35	G	-8.1	32	0.00	0	0	263	9999
337. 3	6.8	10.8	12.2	4.01	5.39	1.34	G	-7.9	33	0.00	0	0	258	9999
337. 4	6.8	9.7	11.9	2.90	5.05	2.11	G	-8.1	35	0.00	0	0	258	9999
337. 5	4.6	9.6	11.3	5.05	6.73	1.63	G	-8.3	43	0.00	0	0	255	9999
337. 6	3.0	9.9	11.4	6.84	8.32	1.48	G	-8.1	44	0.00	0	0	254	9999
337. 7	3.2	10.6	12.9	7.41	9.53	2.36	G	-7.4	43	0.00	3	0	259	9999
337. 8	7.5	10.0	11.7	2.48	4.24	1.71	G	-4.3	35	0.00	118	27	268	9999
337. 9	14.2	14.0	13.8	-0.22	-0.39	-0.21	D	-5.9	21	0.00	332	79	293	9999
337.10	17.3	16.9	16.6	-0.35	-0.66	-0.34	B	-5.4	19	0.00	430	100	294	9999
337.11	19.7	19.3	18.9	-0.43	-0.86	-0.47	A	-4.7	17	0.00	505	139	299	9999
337.12	21.4	20.9	20.3	-0.56	-1.07	-0.55	A	-4.5	16	0.00	622	144	302	9999
337.13	23.0	22.5	22.0	-0.45	-0.90	-0.49	A	-4.0	16	0.00	602	139	308	9999
337.14	24.6	24.1	23.6	-0.50	-0.93	-0.46	A	-4.1	15	0.00	518	119	311	9999
337.15	24.7	24.3	23.9	-0.37	-0.77	-0.44	A	-4.2	14	0.00	370	85	309	9999
337.16	24.3	24.1	23.8	-0.17	-0.45	-0.32	C	-5.0	14	0.00	189	42	305	9999
337.17	21.6	22.2	22.5	0.67	0.97	0.27	E	-4.8	19	0.00	26	4	296	9999
337.18	17.9	19.7	20.4	1.81	2.55	0.70	F	-5.0	23	0.00	0	0	288	9999
337.19	15.6	17.4	18.5	1.72	2.93	1.18	G	-4.5	24	0.00	0	0	283	9999
337.20	15.7	17.2	18.4	1.59	2.81	1.19	G	-5.0	25	0.00	0	0	283	9999
337.21	14.2	15.8	17.7	1.70	3.63	1.89	G	-5.2	28	0.00	0	0	279	9999
337.22	12.0	15.7	16.9	3.75	5.02	1.22	G	-5.4	33	0.00	0	0	276	9999
337.23	10.2	16.0	17.1	5.78	6.94	1.12	G	-4.9	29	0.00	0	0	278	9999

DAILY SUMMARIES

3 METER TEMP --- AVG = 13.9 MAX = 24.7 MIN = 3.0 AVG DEW POINT = -5.9 TOTAL PRCP = 0.00

10 METER WINDS -- AVG SPEED = 1.5 AVG DIR = 274 PEAK SPEED = 8.0 , OCCURRED DURING HOUR 14

NUMBER OF HOURS PER STABILITY CLASS A = 5 , B = 1, C = 1, D = 1, E = 1, F = 1, G = 14

WIPP METEOROLOGICAL DATA DAILY SUMMARY FOR 12/ 4/77

JULIAN DAY.HR	3 METER WIND DIR	SPD	PEAK SPD	TURB INT	10 METER WIND DIR	SPD	PEAK SPD	TURB INT	30 METER WIND DIR	SPD	PEAK SPD	TURB INT	BAROM PRESS
338. 0	75	1.2	2.2	0.45	49	0.9	2.2	1.09	348	0.8	2.7	1.17	889.0
338. 1	246	0.3	2.6	2.75	248	1.3	3.4	0.83	257	2.3	4.0	0.34	888.6
338. 2	76	1.0	1.8	0.62	180	0.5	1.7	0.56	260	1.3	2.3	0.35	888.2
338. 3	79	1.0	2.0	0.49	181	0.5	1.7	0.70	228	1.0	2.0	0.27	887.9
338. 4	42	1.4	2.3	0.30	333	1.2	3.5	0.50	290	2.0	5.3	0.14	887.8
338. 5	274	1.2	2.7	0.47	268	3.2	5.2	0.23	264	5.0	7.2	0.16	887.8
338. 6	250	0.2	3.1	2.65	266	1.9	3.9	0.45	271	4.2	5.8	0.19	887.5
338. 7	12	0.5	2.3	1.11	278	0.9	2.5	0.73	257	2.8	4.6	0.41	887.9
338. 8	61	0.9	2.3	0.51	63	0.8	2.9	0.59	253	0.4	2.7	1.29	888.1
338. 9	277	1.8	4.1	0.36	276	2.3	4.9	0.31	275	2.9	5.1	0.23	888.3
338.10	304	2.2	3.7	0.30	301	2.7	4.2	0.25	298	3.0	4.4	0.22	888.6
338.11	270	3.7	5.8	0.23	268	4.4	6.8	0.20	267	4.9	7.4	0.18	888.5
338.12	298	4.3	8.0	0.29	295	5.4	9.5	0.26	293	6.2	9.3	0.23	887.5
338.13	307	4.8	8.8	0.33	304	6.1	10.3	0.28	302	7.1	11.1	0.24	886.8
338.14	306	4.2	7.4	0.29	303	5.3	8.8	0.25	301	6.2	10.2	0.23	886.1
338.15	319	4.3	10.5	0.27	315	5.5	11.5	0.23	312	6.7	12.8	0.21	885.9
338.16	327	4.7	6.9	0.17	322	6.2	8.3	0.15	320	7.5	10.2	0.14	885.8
338.17	318	1.7	4.1	0.33	309	2.9	5.3	0.37	308	4.4	6.8	0.30	885.8
338.18	256	1.3	3.1	0.53	261	2.9	4.5	0.30	267	5.1	7.4	0.17	885.8
338.19	266	1.3	2.4	0.19	267	3.0	4.0	0.11	268	5.6	6.7	0.08	886.1
338.20	195	0.2	1.8	1.30	283	1.4	3.0	0.28	252	4.4	5.9	0.14	886.1
338.21	267	1.7	3.6	0.21	262	3.5	5.1	0.13	259	6.4	8.2	0.08	886.0
338.22	268	1.9	3.7	0.13	263	3.8	5.4	0.11	261	6.7	8.2	0.07	886.0
338.23	257	2.6	4.3	0.16	252	4.6	6.0	0.14	252	7.9	9.5	0.09	885.6

JULIAN DAY.HR	TEMPERATURES 3 M	10 M	30 M	DELTA TEMPS 10-3	30-3	30-10	STAB CLASS	DEW POINT	REL HUM	PRCP	RADIATION PARAMETERS SW SKY	SW REF	LW SKY	LW REF
338. 0	10.2	16.1	16.9	5.89	6.68	0.75	F	-4.8	29	0.00	0	0	275	9999
338. 1	13.1	16.1	16.7	2.97	3.60	0.58	F	-5.1	32	0.00	0	0	277	9999
338. 2	8.0	13.8	15.2	5.82	7.11	1.36	G	-5.3	39	0.00	0	0	271	9999
338. 3	7.8	13.9	15.1	6.15	7.34	1.15	G	-5.8	46	0.00	0	0	273	9999
338. 4	8.0	14.2	15.5	6.20	7.50	1.32	G	-4.6	33	0.00	0	0	273	9999
338. 5	10.7	13.1	15.0	2.36	4.34	1.94	G	-4.7	36	0.00	0	0	272	9999
338. 6	8.1	11.0	13.2	2.85	5.14	2.24	G	-4.9	42	0.00	0	0	266	9999
338. 7	9.0	10.8	11.9	1.79	2.88	1.04	G	-4.9	37	0.00	1	0	265	9999
338. 8	8.3	10.4	11.3	2.09	3.03	0.91	G	-3.0	36	0.00	94	20	267	9999
338. 9	14.4	14.3	14.2	-0.03	-0.09	-0.10	E	-2.9	27	0.00	278	66	281	9999
338.10	16.9	16.6	16.3	-0.29	-0.57	-0.31	C	-2.9	24	0.00	443	103	289	9999
338.11	20.4	20.0	19.6	-0.34	-0.78	-0.47	A	-2.7	19	0.00	558	129	302	9999
338.12	22.6	22.1	21.6	-0.55	-1.03	-0.51	A	-3.5	17	0.00	587	136	314	9999
338.13	23.0	22.4	21.9	-0.56	-1.04	-0.51	A	-3.5	16	0.00	533	123	314	9999
338.14	23.5	23.0	22.5	-0.56	-1.04	-0.51	A	-3.3	16	0.00	504	117	314	9999
338.15	23.8	23.6	23.3	-0.21	-0.47	-0.28	D	-5.1	15	0.00	241	55	323	9999
338.16	23.1	23.1	22.9	-0.01	-0.14	-0.16	D	-5.4	15	0.00	121	28	317	9999
338.17	20.4	21.4	22.0	0.96	1.63	0.63	F	-6.1	20	0.00	14	1	295	9999
338.18	17.0	18.8	20.1	1.80	3.22	1.39	G	-5.0	23	0.00	0	0	291	9999
338.19	16.0	17.6	19.2	1.56	3.17	1.58	G	-5.0	24	0.00	0	0	287	9999
338.20	14.7	16.2	18.3	1.51	3.61	2.06	G	-5.0	26	0.00	0	0	282	9999
338.21	14.2	15.6	17.5	1.46	3.30	1.80	G	-4.7	26	0.00	0	0	282	9999
338.22	13.6	15.0	17.3	1.42	3.75	2.29	G	-5.2	31	0.00	0	0	277	9999
338.23	12.8	14.3	17.1	1.57	4.32	2.72	G	-5.1	26	0.00	0	0	274	9999

DAILY SUMMARIES

3 METER TEMP --- AVG = 15.0 MAX = 23.8 MIN = 7.8 AVG DEW POINT = -4.5 TOTAL PRCP = 0.00

10 METER WINDS -- AVG SPEED = 2.5 AVG DIR = 287 PEAK SPEED = 11.5 , OCCURRED DURING HOUR 15

NUMBER OF HOURS PER STABILITY CLASS A = 4 , B = 0, C = 1, D = 2, E = 1, F = 3, G = 13

WIPP METEOROLOGICAL DATA DAILY SUMMARY FOR 12/ 5/77

JULIAN DAY.HR	3 METER WIND DIR	SPD	PEAK SPD	TURB INT	10 METER WIND DIR	SPD	PEAK SPD	TURB INT	30 METER WIND DIR	SPD	PEAK SPD	TURB INT	BAROM PRESS
339. 0	278	2.5	4.5	0.18	274	4.1	6.2	0.18	271	6.6	9.2	0.16	885.3
339. 1	231	0.4	1.9	1.35	247	2.2	4.6	0.26	252	5.3	7.5	0.07	885.3
339. 2	45	0.5	2.1	0.67	259	0.4	1.8	0.78	258	2.9	4.2	0.17	885.3
339. 3	67	1.7	2.8	0.25	30	0.8	2.3	0.42	303	1.1	3.6	0.55	885.0
339. 4	7	1.3	2.4	0.82	324	2.4	3.8	0.48	306	3.9	6.1	0.21	885.3
339. 5	27	1.3	2.5	0.69	334	2.1	4.6	0.70	309	3.6	6.3	0.33	886.1
339. 6	53	2.0	2.5	0.16	12	2.4	3.2	0.18	335	2.8	3.9	0.17	887.1
339. 7	39	1.3	3.0	0.34	335	1.8	3.1	0.51	311	2.9	4.6	0.34	888.5
339. 8	310	1.1	2.3	0.37	298	2.3	3.8	0.28	292	4.4	5.5	0.16	889.8
339. 9	314	2.0	5.3	0.25	313	2.6	6.7	0.20	312	3.3	7.3	0.16	890.4
339.10	326	4.2	6.5	0.19	322	5.4	8.0	0.14	319	6.2	9.1	0.12	890.9
339.11	343	6.3	8.4	0.16	336	8.1	11.3	0.15	336	9.4	12.1	0.14	890.7
339.12	337	5.6	9.4	0.22	333	7.2	11.0	0.19	332	8.2	11.9	0.19	890.4
339.13	343	4.7	7.3	0.29	338	5.9	9.3	0.25	336	6.7	10.4	0.25	889.6
339.14	325	3.5	7.0	0.41	321	4.4	9.7	0.38	319	5.2	10.5	0.36	889.6
339.15	9999	999.9	999.9	99.99	9999	999.9	999.9	99.99	9999	999.9	999.9	99.99	9999.0
339.16	9999	999.9	999.9	99.99	9999	999.9	999.9	99.99	9999	999.9	999.9	99.99	9999.0
339.17	9999	999.9	999.9	99.99	9999	999.9	999.9	99.99	9999	999.9	999.9	99.99	9999.0
339.18	9999	999.9	999.9	99.99	9999	999.9	999.9	99.99	9999	999.9	999.9	99.99	9999.0
339.19	9999	999.9	999.9	99.99	9999	999.9	999.9	99.99	9999	999.9	999.9	99.99	9999.0
339.20	9999	999.9	999.9	99.99	9999	999.9	999.9	99.99	9999	999.9	999.9	99.99	9999.0
339.21	9999	999.9	999.9	99.99	9999	999.9	999.9	99.99	9999	999.9	999.9	99.99	9999.0
339.22	9999	999.9	999.9	99.99	9999	999.9	999.9	99.99	9999	999.9	999.9	99.99	9999.0
339.23	9999	999.9	999.9	99.99	9999	999.9	999.9	99.99	9999	999.9	999.9	99.99	9999.0

JULIAN DAY.HR	TEMPERATURES 3 M	10 M	30 M	DELTA TEMPS 10-3	30-3	30-10	STAB CLASS	DEW POINT	REL HUM	PRCP	RADIATION PARAMETERS SW SKY	SW REF	LW SKY	LW REF
339. 0	14.3	15.3	16.7	1.00	2.46	1.42	G	-6.0	29	0.00	0	0	274	9999
339. 1	10.6	12.8	16.1	2.15	5.47	3.29	G	-6.1	30	0.00	0	0	266	9999
339. 2	10.7	13.4	15.0	2.72	4.29	1.57	G	-6.6	33	0.00	0	0	267	9999
339. 3	6.7	13.6	14.6	6.89	7.81	1.06	G	-6.9	37	0.00	0	0	262	9999
339. 4	10.1	15.3	16.5	5.18	6.31	1.13	G	-7.0	41	0.00	0	0	265	9999
339. 5	8.1	14.8	15.9	6.70	7.67	1.11	G	-6.2	32	0.00	0	0	265	9999
339. 6	5.9	13.6	15.3	7.86	9.35	1.50	G	-6.9	42	0.00	0	0	257	9999
339. 7	7.3	13.7	14.7	6.39	7.44	1.01	G	-6.3	32	0.00	1	0	264	9999
339. 8	11.3	12.6	14.7	1.27	3.38	2.07	G	-4.8	27	0.00	93	20	271	9999
339. 9	16.1	16.0	16.0	-0.07	-0.06	-0.03	E	-4.3	22	0.00	275	65	282	9999
339.10	18.3	17.9	17.5	-0.41	-0.77	-0.40	A	-3.6	21	0.00	445	105	289	9999
339.11	20.3	19.7	19.3	-0.55	-0.99	-0.50	A	-4.5	18	0.00	562	131	297	9999
339.12	20.8	20.1	19.6	-0.66	-1.17	-0.55	A	-4.3	18	0.00	610	142	300	9999
339.13	21.2	20.5	20.0	-0.65	-1.18	-0.56	A	-4.3	17	0.00	591	137	302	9999
339.14	21.5	20.9	20.4	-0.61	-1.08	-0.50	A	-4.2	18	0.00	507	117	303	9999
339.15	999.9	999.9	999.9	99.99	99.99	99.99		999.9	9999	99.99	9999	9999	9999	9999
339.16	999.9	999.9	999.9	99.99	99.99	99.99		999.9	9999	99.99	9999	9999	9999	9999
339.17	999.9	999.9	999.9	99.99	99.99	99.99		999.9	9999	99.99	9999	9999	9999	9999
339.18	999.9	999.9	999.9	99.99	99.99	99.99		999.9	9999	99.99	9999	9999	9999	9999
339.19	999.9	999.9	999.9	99.99	99.99	99.99		999.9	9999	99.99	9999	9999	9999	9999
339.20	999.9	999.9	999.9	99.99	99.99	99.99		999.9	9999	99.99	9999	9999	9999	9999
339.21	999.9	999.9	999.9	99.99	99.99	99.99		[illegible]	9999	99.99	9999	9999	9999	9999
339.22	999.9	999.9	999.9	99.99	99.99	99.99		[illegible]	9999	99.99	9999	9999	9999	9999
339.23	999.9	999.9	999.9	99.99	99.99	99.99		[illegible]	9999	99.99	9999	9999	9999	9999

DAILY SUMMARIES

3 METER TEMP --- AVG = 13.5 MAX = 21.5 MIN = 5.9 AVG DEW POINT = -5.5 TOTAL PRCP = 0.00

10 METER WINDS -- AVG SPEED = 3.1 AVG DIR = 324 PEAK SPEED = 11.3 , OCCURRED DURING HOUR 11

NUMBER OF HOURS PER STABILITY CLASS A = 5 , B = 0, C = 0, D = 0, E = 1, F = 0, G = 9

WIPP METEOROLOGICAL DATA DAILY SUMMARY FOR 12/ 6/87

JULIAN DAY.HR	3 METER WIND DIR	3 METER WIND SPD	3 METER WIND PEAK SPD	3 METER WIND TURB INT	10 METER WIND DIR	10 METER WIND SPD	10 METER WIND PEAK SPD	10 METER WIND TURB INT	30 METER WIND DIR	30 METER WIND SPD	30 METER WIND PEAK SPD	30 METER WIND TURB INT	BAROM PRESS
340. 0	9999	999.9	999.9	99.99	9999	999.9	999.9	99.99	9999	999.9	999.9	99.99	9999.0
340. 1	9999	999.9	999.9	99.99	9999	999.9	999.9	99.99	9999	999.9	999.9	99.99	9999.0
340. 2	9999	999.9	999.9	99.99	9999	999.9	999.9	99.99	9999	999.9	999.9	99.99	9999.0
340. 3	9999	999.9	999.9	99.99	9999	999.9	999.9	99.99	9999	999.9	999.9	99.99	9999.0
340. 4	9999	999.9	999.9	99.99	9999	999.9	999.9	99.99	9999	999.9	999.9	99.99	9999.0
340. 5	9999	999.9	999.9	99.99	9999	999.9	999.9	99.99	9999	999.9	999.9	99.99	9999.0
340. 6	9999	999.9	999.9	99.99	9999	999.9	999.9	99.99	9999	999.9	999.9	99.99	9999.0
340. 7	9999	999.9	999.9	99.99	9999	999.9	999.9	99.99	9999	999.9	999.9	99.99	9999.0
340. 8	9999	999.9	999.9	99.99	9999	999.9	999.9	99.99	9999	999.9	999.9	99.99	9999.0
340. 9	9999	999.9	999.9	99.99	9999	999.9	999.9	99.99	9999	999.9	999.9	99.99	9999.0
340.10	9999	999.9	999.9	99.99	9999	999.9	999.9	99.99	9999	999.9	999.9	99.99	9999.0
340.11	9999	999.9	999.9	99.99	9999	999.9	999.9	99.99	9999	999.9	999.9	99.99	9999.0
340.12	9999	999.9	999.9	99.99	9999	999.9	999.9	99.99	9999	999.9	999.9	99.99	9999.0
340.13	9999	999.9	999.9	99.99	9999	999.9	999.9	99.99	9999	999.9	999.9	99.99	9999.0
340.14	9999	999.9	999.9	99.99	9999	999.9	999.9	99.99	9999	999.9	999.9	99.99	9999.0
340.15	9999	999.9	999.9	99.99	9999	999.9	999.9	99.99	9999	999.9	999.9	99.99	9999.0
340.16	9999	999.9	999.9	99.99	9999	999.9	999.9	99.99	9999	999.9	999.9	99.99	9999.0
340.17	9999	999.9	999.9	99.99	9999	999.9	999.9	99.99	9999	999.9	999.9	99.99	897.1
340.18	168	3.1	5.0	0.09	167	4.3	5.9	0.07	168	5.9	7.1	0.07	896.7
340.19	165	2.9	4.0	0.09	164	4.0	5.4	0.07	164	5.5	6.8	0.06	896.5
340.20	160	3.2	4.7	0.09	159	4.4	5.9	0.07	158	6.0	7.3	0.06	896.2
340.21	150	2.6	4.2	0.11	150	4.2	5.3	0.09	152	6.2	7.3	0.06	895.7
340.22	153	2.7	3.7	0.09	152	4.2	5.3	0.07	155	6.5	7.5	0.06	894.9
340.23	152	2.5	3.8	0.10	150	4.0	5.2	0.07	151	6.1	7.3	0.05	894.2

JULIAN DAY.HR	TEMPERATURES 3 M	TEMPERATURES 10 M	TEMPERATURES 30 M	DELTA TEMPS 10-3	DELTA TEMPS 30-3	DELTA TEMPS 30-10	STAB CLASS	DEW POINT	REL HUM	PRCP	RADIATION PARAMETERS SW SKY	SW REF	LW SKY	LW REF
340. 0	999.9	999.9	999.9	99.99	99.99	99.99		999.9	9999	99.99	9999	9999	9999	9999
340. 1	999.9	999.9	999.9	99.99	99.99	99.99		999.9	9999	99.99	9999	9999	9999	9999
340. 2	999.9	999.9	999.9	99.99	99.99	99.99		999.9	9999	99.99	9999	9999	9999	9999
340. 3	999.9	999.9	999.9	99.99	99.99	99.99		999.9	9999	99.99	9999	9999	9999	9999
340. 4	999.9	999.9	999.9	99.99	99.99	99.99		999.9	9999	99.99	9999	9999	9999	9999
340. 5	999.9	999.9	999.9	99.99	99.99	99.99		999.9	9999	99.99	9999	9999	9999	9999
340. 6	999.9	999.9	999.9	99.99	99.99	99.99		999.9	9999	99.99	9999	9999	9999	9999
340. 7	999.9	999.9	999.9	99.99	99.99	99.99		999.9	9999	99.99	9999	9999	9999	9999
340. 8	999.9	999.9	999.9	99.99	99.99	99.99		999.9	9999	99.99	9999	9999	9999	9999
340. 9	999.9	999.9	999.9	99.99	99.99	99.99		999.9	9999	99.99	9999	9999	9999	9999
340.10	999.9	999.9	999.9	99.99	99.99	99.99		999.9	9999	99.99	9999	9999	9999	9999
340.11	999.9	999.9	999.9	99.99	99.99	99.99		999.9	9999	99.99	9999	9999	9999	9999
340.12	999.9	999.9	999.9	99.99	99.99	99.99		999.9	9999	99.99	9999	9999	9999	9999
340.13	999.9	999.9	999.9	99.99	99.99	99.99		999.9	9999	99.99	9999	9999	9999	9999
340.14	999.9	999.9	999.9	99.99	99.99	99.99		999.9	9999	99.99	9999	9999	9999	9999
340.15	999.9	999.9	999.9	99.99	99.99	99.99		999.9	9999	99.99	9999	9999	9999	9999
340.16	999.9	999.9	999.9	99.99	99.99	99.99		999.9	9999	99.99	9999	9999	9999	9999
340.17	999.9	999.9	999.9	99.99	99.99	99.99		-7.3	9999	0.00	9999	9999	9999	9999
340.18	2.8	3.1	3.3	0.26	0.49	0.19	E	-7.5	49	0.00	0	0	223	9999
340.19	1.8	2.1	2.4	0.31	0.58	0.23	E	-8.1	49	0.00	0	0	221	9999
340.20	1.2	1.5	1.7	0.30	0.56	0.21	E	-8.4	51	0.00	0	0	218	9999
340.21	0.4	0.8	1.4	0.41	1.03	0.57	F	-8.0	54	0.00	0	0	217	9999
340.22	0.0	0.6	1.5	0.51	1.38	0.83	G	-7.4	55	0.00	0	0	217	9999
340.23	0.4	1.0	1.8	0.57	1.38	0.74	F	-7.0	50	0.00	0	0	218	9999

DAILY SUMMARIES

3 METER TEMP --- AVG = 1.1 MAX = 2.8 MIN = 0.0 AVG DEW POINT = -7.7 TOTAL PRCP = 0.00

10 METER WINDS -- AVG SPEED = 4.2 AVG DIR = 157 PEAK SPEED = 5.9 , OCCURRED DURING HOUR 16

NUMBER OF HOURS PER STABILITY CLASS A = 0, B = 0, C = 0, D = 0, E = 3, F = 8, G = 1

WIPP METEOROLOGICAL DATA DAILY SUMMARY FOR 12/ 7/77

JULIAN DAY.HR	3 METER WIND DIR	SPD	PEAK SPD	TURB INT	10 METER WIND DIR	SPD	PEAK SPD	TURB INT	30 METER WIND DIR	SPD	PEAK SPD	TURB INT	BAROM PRESS
341.0	143	1.6	3.2	0.23	143	2.8	4.6	0.14	145	5.5	6.7	0.10	893.4
341.1	136	1.8	2.9	0.10	135	2.8	5.5	0.07	148	6.3	7.4	0.10	892.3
341.2	139	2.2	3.7	0.15	141	4.0	5.9	0.08	159	7.1	7.9	0.07	891.8
341.3	121	1.4	2.3	0.13	128	1.3	4.0	0.12	147	5.6	6.3	0.09	891.3
341.4	84	1.1	2.3	0.56	100	1.4	3.2	0.56	149	3.6	5.0	0.20	891.0
341.5	102	1.3	2.6	0.34	111	1.3	3.9	0.23	144	4.4	5.4	0.11	890.9
341.6	79	1.1	2.4	0.50	108	1.3	2.6	0.29	145	3.3	4.4	0.12	890.6
341.7	121	0.8	2.1	0.40	131	1.0	3.5	0.14	150	4.2	4.9	0.14	890.9
341.8	110	0.4	1.2	0.56	134	0.5	2.7	0.44	183	2.0	3.9	0.32	891.0
341.9	159	1.0	2.2	0.52	156	1.1	2.4	0.46	152	1.4	2.8	0.49	891.2
341.10	226	0.3	2.0	2.04	218	0.4	2.2	1.79	214	0.5	2.6	1.47	891.2
341.11	235	1.3	3.2	0.81	232	1.5	3.3	0.43	232	1.6	3.5	0.35	890.4
341.12	225	2.1	3.7	0.34	225	2.4	4.6	0.28	227	2.7	4.6	0.25	889.0
341.13	238	2.3	4.8	0.41	234	2.7	5.5	0.32	236	3.0	5.5	0.23	887.5
341.14	248	3.0	4.8	0.37	245	3.5	5.7	0.33	247	3.9	6.2	0.28	887.1
341.15	197	2.6	4.5	0.41	195	3.0	5.0	0.39	196	3.2	4.9	0.36	886.4
341.16	194	2.2	3.5	0.24	197	2.7	4.1	0.20	197	2.9	4.2	0.17	886.2
341.17	225	1.5	3.2	0.29	222	2.7	4.0	0.18	225	3.7	4.5	0.17	886.0
341.18	287	0.2	2.2	2.79	248	1.6	2.6	0.26	244	2.8	3.7	0.08	886.0
341.19	157	0.2	1.8	3.49	224	1.5	2.7	0.24	241	3.0	5.1	0.12	886.0
341.20	156	1.3	3.6	0.55	174	3.0	5.2	0.33	201	4.2	7.3	0.28	885.7
341.21	180	0.9	2.2	0.60	202	1.9	3.0	0.22	224	4.1	6.3	0.14	885.7
341.22	141	1.0	2.6	0.89	175	2.2	4.5	0.35	203	4.1	6.2	0.23	885.4
341.23	191	1.6	3.8	0.32	202	3.1	6.5	0.27	220	6.0	8.6	0.19	885.4

JULIAN DAY.HR	TEMPERATURES 3 M	10 M	30 M	DELTA TEMPS 10-3	30-3	30-10	STAB CLASS	DEW POINT	REL HUM	PRCP	RADIATION PARAMETERS SW SKY	SW REF	LW SKY	LW REF
341.0	-0.3	0.3	1.4	0.60	1.79	1.14	G	-7.2	61	0.00	0	0	217	9999
341.1	-0.6	0.1	2.1	0.68	2.69	1.97	G	-6.9	62	0.00	0	0	218	9999
341.2	-0.5	0.3	3.0	0.81	3.56	2.71	G	-6.4	63	0.00	0	0	219	9999
341.3	0.5	1.5	3.6	1.00	3.16	2.12	G	-5.7	61	0.00	0	0	221	9999
341.4	-0.8	1.1	4.1	1.93	4.91	2.94	G	-6.3	66	0.00	0	0	221	9999
341.5	-0.5	1.0	4.1	1.48	4.65	3.13	G	-6.8	68	0.00	0	0	221	9999
341.6	-0.7	1.8	5.2	2.40	5.86	3.41	G	-5.3	61	0.00	0	0	221	9999
341.7	0.1	1.6	5.0	1.43	4.85	3.38	G	-5.5	64	0.00	1	0	222	9999
341.8	3.3	3.9	6.9	0.60	3.66	3.01	G	-2.4	54	0.00	98	28	234	9999
341.9	8.0	8.0	7.9	-0.06	-0.14	-0.12	D	-2.4	40	0.00	285	70	247	9999
341.10	12.2	12.1	11.9	-0.11	-0.28	-0.20	D	-3.5	30	0.00	489	107	264	9999
341.11	14.4	14.3	14.0	-0.15	-0.42	-0.30	D	-3.7	26	0.00	414	129	278	9999
341.12	17.4	17.1	16.7	-0.31	-0.70	-0.42	A	-4.7	20	0.00	620	142	272	9999
341.13	19.5	19.2	18.7	-0.30	-0.78	-0.51	A	-5.4	17	0.00	604	140	289	250
341.14	21.3	20.9	20.4	-0.41	-0.85	-0.47	A	-6.7	14	0.00	582	121	292	383
341.15	22.0	21.7	21.3	-0.29	-0.66	-0.40	A	-6.5	14	0.00	376	80	292	341
341.16	21.8	21.6	21.3	-0.19	-0.47	-0.32	C	-6.4	15	0.00	196	48	287	342
341.17	19.3	20.3	20.6	0.99	1.36	0.33	F	-8.0	17	0.00	29	5	278	333
341.18	14.6	17.9	19.0	3.22	4.41	1.16	G	-7.6	21	0.00	0	0	271	334
341.19	13.3	16.7	18.2	3.43	4.94	1.47	G	-8.5	20	0.00	0	0	267	341
341.20	12.0	14.8	16.6	2.81	4.59	1.74	G	-10.2	20	0.00	0	0	260	337
341.21	11.4	13.0	14.9	1.57	3.45	1.88	G	-11.7	19	0.00	0	0	258	333
341.22	8.9	10.8	12.9	1.93	4.02	2.09	G	-11.7	22	0.00	0	0	259	336
341.23	8.9	11.4	14.8	2.47	5.90	3.38	G	-11.4	23	0.00	0	0	257	339

********** DAILY SUMMARIES **********

3 METER TEMP --- AVG = 9.4 MAX = 22.0 MIN = -8.5 AVG DEW POINT = -6.7 TOTAL PROP = 0.00

10 METER WINDS -- AVG SPEED = 1.5 AVG DIR = 165 PEAK SPEED = 6.5 , OCCURRED DURING HOUR 23

NUMBER OF HOURS PER STABILITY CLASS A = 4 , B = 0, C = 1, D = 3, E = 0, F = 1, G = 15

WIPP METEOROLOGICAL DATA DAILY SUMMARY FOR 12/ 8/87

JULIAN DAY.HR	3 METER WIND DIR	SPD	PEAK SPD	TURB INT	10 METER WIND DIR	SPD	PEAK SPD	TURB INT	30 METER WIND DIR	SPD	PEAK SPD	TURB INT	BAROM PRESS
342. 0	218	1.5	3.0	0.49	218	3.4	6.1	0.46	234	5.9	10.0	0.33	885.1
342. 1	229	2.2	4.3	0.19	230	4.2	6.7	0.28	242	6.9	9.2	0.22	884.6
342. 2	230	2.2	5.2	0.24	231	3.7	7.0	0.28	240	5.5	9.3	0.14	884.6
342. 3	258	5.0	7.1	0.16	257	6.9	9.5	0.15	257	10.0	12.0	0.11	884.7
342. 4	257	3.1	6.4	0.23	254	4.9	9.0	0.21	258	7.8	10.7	0.17	884.7
342. 5	272	5.5	8.2	0.10	270	7.3	11.1	0.09	268	10.0	13.1	0.07	884.7
342. 6	265	5.0	7.6	0.14	263	6.7	9.4	0.12	263	9.4	12.0	0.09	885.0
342. 7	273	5.4	8.1	0.10	271	7.1	9.7	0.08	270	9.6	11.8	0.06	885.7
342. 8	252	5.0	8.3	0.20	251	6.5	9.9	0.18	254	8.3	11.8	0.14	885.8
342. 9	259	6.7	9.7	0.13	257	8.5	12.7	0.12	258	10.1	14.6	0.10	886.6
342.10	263	6.9	10.3	0.15	261	8.7	12.9	0.14	261	10.1	13.4	0.11	887.2
342.11	272	7.0	9.5	0.15	270	8.8	11.7	0.14	269	10.1	12.7	0.11	887.1
342.12	279	5.4	8.7	0.22	276	6.6	9.5	0.18	275	7.5	10.9	0.16	887.1
342.13	283	5.3	8.5	0.24	281	6.5	10.2	0.22	279	7.5	10.5	0.18	886.8
342.14	300	2.9	5.8	0.46	297	3.5	6.7	0.42	295	4.0	7.4	0.39	886.9
342.15	303	1.3	4.5	0.66	301	1.7	4.5	0.54	300	1.8	5.2	0.54	887.3
342.16	294	0.5	2.6	1.31	293	0.8	2.8	0.99	290	0.9	3.0	0.87	888.2
342.17	299	0.6	1.3	0.45	276	1.1	1.8	0.35	272	1.4	1.9	0.37	889.1
342.18	66	0.9	1.5	0.34	257	0.1	1.0	2.34	256	1.4	2.5	0.23	890.4
342.19	91	4.2	12.0	0.21	90	5.4	13.7	0.33	90	5.9	16.2	0.27	892.3
342.20	86	8.0	11.5	0.09	79	10.4	14.7	0.09	82	12.3	16.6	0.07	893.4
342.21	88	8.9	13.8	0.10	81	11.6	18.2	0.10	83	13.7	18.2	0.08	894.6
342.22	85	9.2	13.2	0.09	79	11.9	16.7	0.08	80	14.0	18.2	0.06	896.5
342.23	77	8.4	13.0	0.12	71	10.6	15.9	0.11	73	12.5	16.3	0.09	899.0

JULIAN DAY.HR	TEMPERATURES 3 M	10 M	30 M	DELTA TEMPS 10-3	30-3	30-10	STAB CLASS	DEW POINT	REL HUM	PRCP	RADIATION PARAMETERS SW SKY	SW REF	LW SKY	LW REF
342. 0	8.8	11.9	15.9	3.07	7.17	4.05	G	-11.2	22	0.00	0	0	258	340
342. 1	9.2	12.3	16.0	3.08	6.83	3.71	G	-10.7	20	0.00	0	0	259	339
342. 2	13.1	14.7	16.0	1.60	2.89	1.24	G	-10.6	16	0.00	0	0	265	337
342. 3	14.9	15.7	16.9	0.76	2.03	1.23	G	-11.5	17	0.00	0	0	288	334
342. 4	12.8	14.0	16.2	1.18	3.41	2.18	G	-11.3	15	0.00	0	0	279	337
342. 5	15.5	16.1	16.7	0.57	1.20	0.80	F	-12.1	14	0.00	0	0	348	327
342. 6	15.3	15.9	16.6	0.56	1.23	0.63	F	-12.2	13	0.00	0	0	270	330
342. 7	15.6	16.0	16.4	0.45	0.88	0.39	F	-12.4	14	0.00	1	0	268	327
342. 8	15.7	16.0	16.3	0.31	0.59	0.24	E	-10.9	13	0.00	96	21	272	332
342. 9	18.7	18.7	18.6	0.04	-0.08	-0.16	D	-9.3	13	0.00	283	69	279	336
342.10	21.6	21.4	21.0	-0.20	-0.58	-0.41	A	-7.5	13	0.00	455	110	289	336
342.11	23.1	22.8	22.2	-0.32	-0.81	-0.53	A	-7.0	12	0.00	567	136	296	332
342.12	24.4	23.9	23.4	-0.46	-1.00	-0.57	A	-6.1	12	99.99	617	147	303	332
342.13	24.7	24.2	23.6	-0.50	-1.08	-0.62	A	-5.5	13	99.99	601	145	305	331
342.14	25.0	24.5	24.1	-0.46	-0.87	-0.45	A	-4.3	14	99.99	520	123	306	329
342.15	25.0	24.7	24.4	-0.29	-0.59	-0.34	C	-4.3	14	0.00	369	87	304	317
342.16	24.8	24.6	24.4	-0.14	-0.35	-0.24	D	-5.0	14	0.00	186	39	301	320
342.17	22.7	23.8	23.9	1.03	1.14	0.07	E	-10.9	12	0.00	26	3	293	317
342.18	16.0	21.5	22.3	5.51	6.34	0.84	G	-10.4	18	0.00	0	0	287	321
342.19	14.2	16.9	17.5	2.71	3.32	0.57	F	-6.5	28	0.00	0	0	276	342
342.20	11.7	11.8	11.9	0.13	0.17	-0.00	E	-4.0	37	0.00	0	0	262	368
342.21	7.9	7.9	7.9	0.04	0.01	-0.07	E	-4.4	46	0.00	0	0	250	376
342.22	5.0	5.1	5.0	0.04	-0.02	-0.09	E	-5.4	51	0.00	0	0	241	379
342.23	2.7	2.7	2.6	0.04	-0.04	-0.11	D	-6.4	55	0.00	0	0	232	376

DAILY SUMMARIES

3 METER TEMP --- AVG = 16.2 MAX = 25.0 MIN = 2.7 AVG DEW POINT = -8.3 TOTAL PRCP = 0.00

10 METER WINDS -- AVG SPEED = 1.8 AVG DIR = 267 PEAK SPEED = 10.2 , OCCURRED DURING HOUR 21

NUMBER OF HOURS PER STABILITY CLASS A = 5 , B = 0, C = 1, D = 3, E = 9, F = 4, G = 6

NIPP METEOROLOGICAL DATA DAILY SUMMARY FOR 12/ 9/77

JULIAN DAY.HR	3 METER WIND DIR	SPD	PEAK SPD	TURB INT	10 METER WIND DIR	SPD	PEAK SPD	TURB INT	30 METER WIND DIR	SPD	PEAK SPD	TURB INT	BAROM PRESS
343. 0	60	5.1	9.2	0.21	55	6.5	11.2	0.20	58	7.8	12.9	0.20	901.3
343. 1	60	1.9	4.0	0.23	45	2.6	4.9	0.19	48	3.4	6.5	0.19	902.2
343. 2	60	1.5	4.5	0.29	56	2.4	5.1	0.23	57	3.2	6.2	0.20	902.9
343. 3	60	2.1	4.1	0.14	56	2.9	5.0	0.10	57	4.1	6.2	0.10	903.8
343. 4	54	0.9	2.5	0.26	53	1.6	3.7	0.18	55	2.7	5.3	0.17	904.4
343. 5	74	1.0	1.4	0.20	69	1.8	2.8	0.16	69	2.8	3.7	0.14	905.1
343. 6	61	0.9	1.6	0.18	59	1.9	2.4	0.08	64	2.7	3.3	0.07	905.9
343. 7	60	1.0	1.4	0.28	57	1.4	2.1	0.17	71	2.0	2.9	0.14	906.7
343. 8	71	1.5	3.8	0.26	64	2.1	4.7	0.26	69	2.6	5.2	0.19	907.4
343. 9	92	2.8	4.4	0.22	88	3.4	4.8	0.21	90	3.9	5.1	0.18	908.9
343.10	114	2.4	4.7	0.28	112	2.5	5.4	0.28	113	3.6	5.8	0.22	908.9
343.11	129	2.6	5.2	0.39	129	2.8	6.4	0.38	126	4.1	6.3	0.26	908.8
343.12	134	2.4	5.7	0.36	135	2.7	5.6	0.28	133	3.9	7.2	0.22	907.9
343.13	147	3.2	6.3	0.39	147	3.7	6.9	0.33	143	4.6	7.4	0.30	907.0
343.14	143	3.1	5.9	0.36	144	3.7	7.0	0.30	140	4.6	8.3	0.28	906.3
343.15	142	3.1	6.0	0.24	143	3.8	7.3	0.21	141	4.8	7.2	0.22	905.7
343.16	148	3.7	5.9	0.20	147	4.8	7.0	0.16	145	5.6	7.5	0.17	905.6
343.17	149	3.2	5.2	0.17	147	4.5	6.4	0.14	146	5.3	6.9	0.12	905.6
343.18	131	1.2	3.0	0.24	138	2.1	4.2	0.10	140	4.6	5.4	0.06	905.6
343.19	122	1.2	1.7	0.07	128	1.0	2.2	0.04	139	5.6	6.3	0.03	905.7
343.20	116	1.3	1.9	0.07	122	0.5	1.1	0.04	134	5.8	6.7	0.07	906.0
343.21	120	1.4	1.8	0.07	122	0.8	1.5	0.05	127	6.1	6.9	0.04	906.0
343.22	124	1.7	3.2	0.09	126	1.4	3.1	0.07	127	6.5	7.7	0.03	906.0
343.23	126	2.0	3.1	0.09	128	1.9	3.7	0.07	127	6.3	7.3	0.04	906.0

JULIAN DAY.HR	TEMPERATURES 3 M	10 M	30 M	DELTA TEMPS 10-3	30-3	30-10	STAB CLASS	DEW POINT	REL HUM	PRCP	RADIATION PARAMETERS SW SKY	SW REF	LW SKY	LW REF
343. 0	1.1	1.2	1.1	0.07	0.01	-0.09	E	-7.1	57	0.00	0	0	226	372
343. 1	-0.4	-0.2	-0.2	0.18	0.21	-0.01	E	-8.3	58	0.00	0	0	219	375
343. 2	-2.2	-1.7	-1.6	0.47	0.67	0.16	E	-9.7	58	0.00	0	0	214	374
343. 3	-3.2	-3.0	-2.8	0.23	0.40	0.12	E	-11.2	60	0.00	0	0	209	376
343. 4	-5.1	-4.5	-4.0	0.64	1.10	0.42	F	-11.8	62	0.00	0	0	206	373
343. 5	-6.4	-5.2	-4.8	1.12	1.53	0.36	F	-13.6	59	0.00	0	0	204	377
343. 6	-7.7	-5.9	-5.5	1.82	2.22	0.35	F	-14.2	61	0.00	0	0	208	371
343. 7	-8.7	-6.5	-6.1	2.13	2.56	0.39	F	-15.2	61	0.00	1	0	200	374
343. 8	-7.0	-6.3	-6.2	0.66	0.78	0.07	E	-13.3	52	0.00	94	21	203	378
343. 9	-4.0	-4.4	-4.7	-0.43	-0.75	-0.36	B	-12.6	47	0.00	281	68	207	381
343.10	-2.3	-2.8	-3.3	-0.52	-0.97	-0.49	A	-12.3	43	0.00	456	108	212	372
343.11	-0.7	-1.3	-1.9	-0.60	-1.12	-0.56	A	-12.4	39	0.00	562	134	219	367
343.12	0.8	0.2	-0.3	-0.56	-1.11	-0.59	A	-12.1	36	0.00	611	145	224	363
343.13	2.1	1.6	0.9	-0.58	-1.19	-0.65	A	-12.3	32	0.00	600	143	227	360
343.14	3.1	2.5	1.9	-0.68	-1.20	-0.60	A	-12.7	30	0.00	581	138	228	356
343.15	3.7	3.1	2.6	-0.65	-1.16	-0.55	A	-13.6	27	0.00	378	92	226	346
343.16	3.7	3.3	2.9	-0.46	-0.86	-0.43	A	-14.7	25	0.00	199	48	223	338
343.17	2.4	2.4	2.3	-0.02	-0.14	-0.16	D	-15.6	27	0.00	30	6	218	332
343.18	-0.4	0.6	1.1	0.95	1.51	0.56	F	-16.5	33	0.00	0	0	214	325
343.19	-2.2	-1.3	0.1	0.80	2.29	1.39	G	-16.5	34	0.00	0	0	213	329
343.20	-2.9	-2.2	-0.9	0.70	2.02	1.28	G	-16.7	33	0.00	0	0	213	340
343.21	-3.2	-2.7	-1.8	0.45	1.36	0.89	G	-17.4	33	0.00	0	0	216	341
343.22	-3.3	-3.0	-2.4	0.36	0.96	0.56	F	-18.1	31	0.00	0	0	211	342
343.23	-3.4	-3.1	-2.9	0.35	0.49	0.21	E	-18.6	30	0.00	4	0	210	330

DAILY SUMMARIES

3 METER TEMP --- AVG = -1.9 MAX = 3.7 MIN = -8.7 AVG DEW POINT = -13.6 TOTAL PRCP = 0.00

10 METER WINDS -- AVG SPEED = 2.0 AVG DIR = 106 PEAK SPEED = 11.2 , OCCURRED DURING HOUR 0

NUMBER OF HOURS PER STABILITY CLASS A = 1, B = 1, C = 0, D = 1, E = 6, F = 6, G = 3

WIPP METEOROLOGICAL DATA DAILY SUMMARY FOR 12/18/87

JULIAN DAY.HR	3 METER WIND DIR	SPD	PEAK SPD	TURB INT	10 METER WIND DIR	SPD	PEAK SPD	TURB INT	30 METER WIND DIR	SPD	PEAK SPD	TURB INT	BAROM PRESS
344.0	125	2.4	4.0	0.11	126	2.2	4.8	0.10	126	6.7	9.2	0.07	905.6
344.1	125	2.6	4.5	0.12	126	2.4	5.1	0.11	125	6.9	9.2	0.08	905.2
344.2	119	2.6	4.6	0.08	119	2.0	3.9	0.07	120	6.4	7.8	0.04	905.1
344.3	115	2.6	4.0	0.12	115	2.6	5.0	0.11	116	5.9	7.7	0.08	904.5
344.4	121	2.4	4.1	0.10	121	1.9	4.6	0.10	123	6.1	8.9	0.07	904.1
344.5	126	2.2	3.4	0.11	127	2.0	4.1	0.09	127	6.0	7.6	0.07	904.1
344.6	125	2.0	3.2	0.11	126	1.8	4.0	0.11	127	5.7	7.5	0.07	904.1
344.7	120	1.7	2.6	0.11	120	1.4	2.5	0.10	122	4.7	5.8	0.06	904.1
344.8	126	1.7	4.3	0.19	128	1.7	4.5	0.21	125	3.8	5.4	0.13	904.5
344.9	159	4.0	5.9	0.18	156	4.9	7.3	0.17	157	5.4	7.2	0.16	904.5
344.10	174	3.5	5.4	0.20	172	4.2	6.4	0.18	171	4.3	6.7	0.16	904.3
344.11	167	3.1	4.5	0.23	165	3.6	5.1	0.20	164	3.9	5.1	0.18	903.5
344.12	166	3.1	4.9	0.24	164	3.6	5.4	0.21	163	3.9	5.8	0.20	902.3
344.13	167	3.4	5.1	0.28	164	4.0	6.3	0.25	164	4.3	6.6	0.22	901.5
344.14	163	3.4	5.6	0.24	162	4.0	6.9	0.22	161	4.3	6.1	0.19	900.5
344.15	165	3.3	5.0	0.23	163	4.1	5.3	0.19	162	4.3	5.6	0.17	900.1
344.16	168	3.1	4.5	0.20	166	3.7	5.1	0.18	165	4.0	5.2	0.17	899.8
344.17	153	2.0	3.6	0.16	152	3.0	5.0	0.14	152	3.9	5.1	0.11	899.7
344.18	137	1.1	2.0	0.32	144	2.4	3.4	0.12	149	4.6	5.4	0.09	900.2
344.19	123	1.1	1.6	0.14	130	1.3	2.7	0.05	137	5.3	6.7	0.03	900.6
344.20	125	1.2	2.1	0.11	128	1.2	2.6	0.04	131	5.1	6.1	0.04	900.6
344.21	149	1.5	2.9	0.13	145	2.5	3.9	0.11	141	4.2	5.3	0.08	901.0
344.22	143	1.9	2.9	0.13	140	2.9	4.2	0.10	137	4.9	6.3	0.08	900.6
344.23	137	1.4	2.6	0.16	137	2.1	3.9	0.13	137	4.7	5.6	0.10	900.6

JULIAN DAY.HR	TEMPERATURES 3 M	10 M	30 M	DELTA TEMPS 10-3	30-3	30-10	STAB CLASS	DEW POINT	REL HUM	PRCP	RADIATION PARAMETERS SW SKY	SW REF	LW SKY	LW REF
344.0	-3.9	-3.7	-3.5	0.20	0.38	0.14	E	-18.8	30	0.00	0	0	210	342
344.1	-4.4	-4.2	-4.1	0.16	0.28	0.08	E	-19.1	32	0.00	0	0	210	340
344.2	-4.9	-4.8	-4.7	0.13	0.25	0.08	E	-18.8	32	0.00	0	0	213	341
344.3	-5.2	-5.1	-4.9	0.10	0.26	0.12	E	-18.8	33	0.00	0	0	218	344
344.4	-5.1	-5.0	-4.9	0.10	0.20	0.07	E	-18.7	34	0.00	0	0	228	345
344.5	-5.0	-4.8	-4.7	0.14	0.25	0.07	E	-18.1	35	0.00	0	0	223	342
344.6	-5.1	-4.9	-4.8	0.13	0.22	0.06	E	-18.1	36	0.00	0	0	224	345
344.7	-5.2	-5.1	-5.1	0.08	0.18	0.05	E	-17.6	36	0.00	1	0	230	348
344.8	-4.2	-4.3	-4.4	-0.10	-0.27	-0.21	D	-16.3	35	0.00	66	14	252	349
344.9	-0.9	-1.2	-1.6	-0.35	-0.71	-0.40	A	-14.6	32	0.00	269	65	250	355
344.10	0.7	0.3	-0.0	-0.32	-0.69	-0.40	A	-13.6	30	0.00	286	66	251	356
344.11	2.9	2.6	2.2	-0.33	-0.73	-0.44	A	-12.5	29	0.00	312	71	258	359
344.12	5.6	5.2	4.7	-0.45	-0.94	-0.53	A	-11.4	26	0.00	573	135	272	360
344.13	6.8	6.3	5.8	-0.48	-0.97	-0.53	A	-10.6	26	0.00	484	113	265	365
344.14	8.4	8.0	7.5	-0.44	-0.87	-0.46	A	-8.0	28	0.00	369	85	275	364
344.15	9.7	9.2	8.8	-0.45	-0.91	-0.49	A	-8.6	27	0.00	322	75	269	361
344.16	9.6	9.3	8.9	-0.29	-0.63	-0.38	B	-7.7	28	0.00	186	43	269	356
344.17	8.3	8.5	8.7	0.20	0.32	0.09	E	-7.3	36	0.00	25	4	266	357
344.18	5.5	6.3	7.3	0.85	1.84	0.99	G	-6.8	42	0.00	0	0	265	360
344.19	4.4	5.1	6.2	0.77	1.90	1.10	G	-6.4	46	0.00	0	0	260	365
344.20	4.3	4.7	5.2	0.41	0.97	0.55	F	-5.8	49	0.00	0	0	267	367
344.21	3.7	4.2	4.5	0.39	0.74	0.31	F	-5.4	52	0.00	0	0	268	372
344.22	3.2	3.4	3.6	0.24	0.43	0.16	E	-5.9	53	0.00	0	0	268	374
344.23	2.7	3.0	3.4	0.30	0.76	0.43	F	-5.7	54	0.00	0	0	270	378

DAILY SUMMARIES

3 METER TEMP --- AVG = 1.3 MAX = 9.7 MIN = -5.2 AVG DEW POINT = -12.3 TOTAL PRCP = 0.00

10 METER WINDS -- AVG SPEED = 2.6 AVG DIR = 148 PEAK SPEED = 7.3 , OCCURRED DURING HOUR 9

NUMBER OF HOURS PER STABILITY CLASS A = 7 , B = 1, C = 0, D = 1, E = 18, F = 3, G = 2

WIPP METEOROLOGICAL DATA DAILY SUMMARY FOR 12/11/77

JULIAN DAY.HR	3 METER WIND DIR	SPD	PEAK SPD	TURB INT	10 METER WIND DIR	SPD	PEAK SPD	TURB INT	30 METER WIND DIR	SPD	PEAK SPD	TURB INT	BAROM PRESS
345.0	143	0.8	1.6	0.21	140	1.3	2.5	0.19	135	2.9	4.5	0.12	900.5
345.1	126	1.0	3.2	0.35	128	1.2	3.5	0.27	127	3.8	6.0	0.09	899.8
345.2	122	1.4	2.7	0.25	124	1.6	3.5	0.25	126	4.8	6.2	0.11	899.3
345.3	118	0.9	2.4	0.40	117	1.1	2.8	0.37	121	4.1	6.0	0.11	899.3
345.4	110	1.5	2.5	0.22	108	2.0	3.2	0.14	115	4.4	7.1	0.09	899.0
345.5	113	1.7	3.3	0.16	111	2.0	4.3	0.12	115	4.4	5.7	0.07	898.8
345.6	126	0.7	2.2	0.55	119	1.0	2.8	0.48	116	2.8	4.5	0.12	898.8
345.7	94	0.6	1.9	0.95	99	0.9	3.2	0.68	114	2.6	4.6	0.21	899.3
345.8	35	0.5	1.4	0.73	69	0.6	2.3	0.90	113	1.8	4.2	0.27	899.3
345.9	197	1.0	2.7	0.54	194	1.1	2.7	0.63	195	1.2	3.0	0.41	899.7
345.10	189	2.1	3.5	0.28	187	2.3	3.7	0.23	185	2.5	3.8	0.20	899.7
345.11	194	2.3	4.2	0.30	193	2.6	4.5	0.26	194	2.8	4.2	0.22	899.0
345.12	186	2.7	4.6	0.32	184	3.0	5.0	0.28	185	3.2	5.0	0.25	897.9
345.13	186	2.8	4.9	0.33	185	3.2	5.3	0.27	186	3.4	5.2	0.23	896.6
345.14	181	3.1	5.1	0.21	179	3.6	5.2	0.18	180	3.8	5.2	0.17	895.8
345.15	179	3.7	5.6	0.21	177	4.2	5.9	0.18	177	4.4	6.1	0.17	895.7
345.16	178	3.4	4.7	0.14	176	4.1	5.5	0.12	177	4.6	5.9	0.12	895.3
345.17	185	2.6	4.4	0.12	183	3.6	5.2	0.09	184	4.5	5.7	0.09	895.3
345.18	158	1.9	2.9	0.24	164	3.7	4.7	0.24	169	5.4	6.5	0.20	895.1
345.19	148	2.8	4.0	0.08	147	4.7	6.0	0.06	149	6.9	7.9	0.04	895.1
345.20	145	2.6	3.6	0.08	144	4.3	5.1	0.06	146	6.3	7.2	0.04	895.4
345.21	148	2.7	4.3	0.10	147	4.3	5.9	0.08	149	6.2	7.9	0.06	895.4
345.22	147	2.7	4.6	0.10	147	4.5	5.6	0.08	151	6.5	7.7	0.05	895.3
345.23	141	2.1	3.0	0.10	139	3.8	5.1	0.06	146	6.5	7.5	0.04	895.3

JULIAN DAY.HR	TEMPERATURES 3 M	10 M	30 M	DELTA TEMPS 10-3	30-3	30-10	STAB CLASS	DEW POINT	REL HUM	PRCP	RADIATION PARAMETERS SW SKY	SW REF	LW SKY	LW REF
345.0	2.5	2.9	3.1	0.37	0.60	0.19	E	-5.8	55	0.00	0	0	275	377
345.1	2.3	2.6	2.9	0.29	0.55	0.22	E	-5.6	56	0.00	0	0	274	380
345.2	1.8	2.1	2.5	0.26	0.72	0.43	F	-5.9	59	0.00	0	0	256	379
345.3	0.5	0.9	1.7	0.39	1.21	0.78	F	-6.1	62	0.00	0	0	239	380
345.4	0.9	1.1	1.6	0.22	0.77	0.47	F	-5.7	63	0.00	0	0	263	385
345.5	0.5	0.7	1.0	0.19	0.58	0.33	F	-5.4	66	0.00	0	0	259	384
345.6	-0.0	0.1	0.2	0.12	0.27	0.11	E	-5.4	69	0.00	0	0	260	387
345.7	-0.9	-0.5	-0.2	0.44	0.74	0.26	E	-6.4	73	0.00	0	0	231	387
345.8	-0.6	-0.2	0.5	0.35	1.02	0.64	F	-3.4	70	0.00	86	19	236	397
345.9	2.8	2.8	2.7	-0.07	-0.19	-0.15	D	-2.9	60	0.00	266	62	243	397
345.10	5.5	5.3	5.0	-0.24	-0.48	-0.28	D	-2.1	51	0.00	438	103	251	404
345.11	9.1	8.8	8.4	-0.27	-0.62	-0.39	A	-2.1	41	0.00	555	131	263	402
345.12	12.1	11.8	11.3	-0.36	-0.78	-0.45	A	-2.2	38	0.00	606	143	272	403
345.13	14.3	13.9	13.4	-0.39	-0.84	-0.48	A	-1.8	31	0.00	588	139	279	399
345.14	16.4	16.0	15.6	-0.41	-0.86	-0.48	A	-2.3	26	0.00	500	118	286	390
345.15	17.6	17.2	16.8	-0.38	-0.82	-0.47	A	-2.0	26	0.00	370	89	288	385
345.16	16.9	16.8	16.5	-0.16	-0.45	-0.33	C	-1.9	29	0.00	161	36	288	379
345.17	15.4	15.8	15.8	0.34	0.44	0.06	E	-1.7	36	0.00	43	9	289	370
345.18	10.9	12.5	13.7	1.58	2.78	1.17	G	-1.6	44	0.00	0	0	267	366
345.19	10.2	10.8	11.7	0.63	1.55	0.88	G	-0.0	50	0.00	0	0	265	394
345.20	9.2	9.8	10.5	0.54	1.27	0.69	F	2.5	64	0.00	0	0	264	397
345.21	8.6	9.2	9.9	0.56	1.27	0.68	F	2.6	67	0.00	0	0	261	407
345.22	8.1	8.7	9.6	0.59	1.49	0.87	G	2.0	69	0.00	0	0	257	404
345.23	6.4	7.0	8.3	0.63	1.96	1.30	G	1.6	77	0.00	0	0	251	403

DAILY SUMMARIES

3 METER TEMP --- AVG = 7.1 MAX = 17.6 MIN = -0.9 AVG DEW POINT = -2.6 TOTAL PRCP = 0.00

10 METER WINDS -- AVG SPEED = 2.4 AVG DIR = 157 PEAK SPEED = 6.0 , OCCURRED DURING HOUR 19

NUMBER OF HOURS PER STABILITY CLASS A = 5 , B = 0, C = 1, D = 2, E = 5, F = 7, G = 4

WIPP METEOROLOGICAL DATA DAILY SUMMARY FOR 12/12/77

JULIAN DAY.HR	3 METER WIND DIR	SPD	PEAK SPD	TURB INT	10 METER WIND DIR	SPD	PEAK SPD	TURB INT	30 METER WIND DIR	SPD	PEAK SPD	TURB INT	BAROM PRESS
346.0	145	2.1	3.4	0.10	142	3.8	4.7	0.06	149	6.3	7.4	0.03	894.7
346.1	133	1.3	2.2	0.11	131	1.8	2.9	0.06	141	5.5	6.3	0.05	894.3
346.2	139	1.2	2.1	0.25	135	2.0	3.5	0.10	149	5.2	6.0	0.07	894.2
346.3	117	0.8	1.7	0.35	123	0.9	2.4	0.26	148	4.3	5.5	0.09	893.8
346.4	130	1.0	2.0	0.20	134	1.9	4.8	0.11	160	4.2	5.2	0.09	893.3
346.5	122	1.1	1.9	0.18	133	1.4	3.7	0.08	160	3.8	4.3	0.12	892.7
346.6	102	1.0	1.7	0.50	124	1.1	4.0	0.24	156	3.3	4.3	0.10	892.7
346.7	106	1.1	1.8	0.25	130	0.9	2.9	0.08	154	3.2	3.9	0.07	892.7
346.8	133	1.1	2.1	0.12	136	2.3	4.5	0.06	157	4.0	5.2	0.06	892.7
346.9	164	1.7	2.9	0.25	163	2.0	3.1	0.22	165	2.3	3.3	0.15	892.9
346.10	182	2.2	3.4	0.25	180	2.5	3.7	0.23	179	2.6	3.8	0.21	892.7
346.11	182	2.8	4.6	0.23	180	3.1	5.1	0.21	179	3.2	5.1	0.20	891.8
346.12	187	3.8	6.1	0.34	186	4.5	7.3	0.33	187	4.7	7.9	0.34	890.5
346.13	212	4.8	7.2	0.25	210	5.8	8.1	0.23	212	6.3	8.4	0.22	889.7
346.14	247	3.9	6.1	0.29	244	4.6	8.0	0.26	245	5.1	9.3	0.23	888.8
346.15	247	4.4	7.2	0.30	245	5.4	8.7	0.[illegible]	247	6.2	9.3	0.24	888.0
346.16	229	4.0	6.8	0.20	227	5.0	7.8	0.1[illegible]	230	5.8	8.1	0.15	887.7
346.17	242	1.9	4.3	0.31	243	3.3	5.9	0.25	246	4.9	6.5	0.20	887.9
346.18	257	2.2	4.0	0.27	255	3.8	5.7	0.27	257	5.6	8.1	0.23	888.7
346.19	253	3.1	6.1	0.14	253	4.7	7.7	0.11	256	6.8	9.9	0.08	889.3
346.20	208	0.9	3.4	1.02	226	1.9	5.5	0.40	242	3.5	8.3	0.15	890.2
346.21	346	1.9	4.8	0.87	331	2.9	7.1	0.45	321	4.4	9.4	0.44	891.2
346.22	17	2.1	3.9	0.25	357	3.4	6.4	0.25	346	5.0	8.8	0.23	892.3
346.23	360	3.2	4.9	0.15	355	4.7	6.2	0.11	352	6.9	8.8	0.08	892.3

JULIAN DAY.HR	TEMPERATURES 3 M	10 M	30 M	DELTA TEMPS 10-3	30-3	30-10	STAB CLASS	DEW POINT	REL HUM	PRCP	RADIATION PARAMETERS SW SKY	SW REF	LW SKY	LW REF
346.0	5.3	5.9	7.4	0.63	2.09	1.43	G	1.2	77	0.00	0	0	248	400
346.1	4.5	5.1	6.7	0.62	2.29	1.63	G	1.0	79	0.00	0	0	246	400
346.2	3.7	4.4	6.5	0.70	2.85	2.09	G	0.4	80	0.00	0	0	243	397
346.3	3.1	3.9	6.2	0.74	3.11	2.33	G	-0.5	78	0.00	0	0	242	396
346.4	2.5	3.9	6.5	1.37	4.01	2.61	G	-0.8	80	0.00	0	0	243	394
346.5	2.3	4.0	6.4	1.66	4.10	2.40	G	-1.0	77	0.00	0	0	245	396
346.6	2.4	4.6	7.4	2.21	4.96	2.71	G	-2.7	76	0.00	0	0	247	399
346.7	2.2	5.6	7.5	3.45	5.29	1.80	G	-2.4	68	0.00	1	0	247	399
346.8	5.0	6.0	7.6	1.03	2.61	1.55	G	-0.0	58	0.00	88	19	255	425
346.9	9.5	9.4	9.4	-0.07	-0.12	-0.09	E	-0.5	45	0.00	269	63	267	446
346.10	12.9	12.7	12.4	-0.17	-0.48	-0.31	C	-0.1	37	0.00	439	103	278	407
346.11	16.1	15.8	15.5	-0.29	-0.64	-0.39	A	-0.9	29	0.00	551	130	290	407
346.12	19.1	18.6	18.2	-0.47	-0.93	-0.[illegible]	A	-1.2	24	0.00	604	142	299	397
346.13	20.9	20.3	19.7	-0.59	-1.16	-0.60	A	-0.8	23	0.00	582	138	307	399
346.14	21.9	21.4	20.9	-0.50	-1.02	-0.55	A	-1.0	21	0.00	508	119	309	384
346.15	22.3	21.8	21.4	-0.44	-0.88	-0.48	A	-1.5	20	0.00	369	88	308	376
346.16	22.0	21.9	21.6	-0.17	-0.85	-0.29	D	-2.1	21	0.00	176	40	304	360
346.17	18.4	19.3	20.1	0.90	1.71	0.78	F	-2.2	29	0.00	15	5	293	347
346.18	15.8	17.3	18.5	1.49	2.73	1.21	G	-3.1	26	0.00	0	0	284	299
346.19	15.9	16.9	17.8	0.93	1.90	0.94	G	-2.9	29	0.00	0	0	283	299
346.20	12.9	14.7	15.6	1.73	2.64	0.87	G	-3.6	36	0.00	0	0	276	288
346.21	13.2	14.6	15.7	1.40	2.49	1.06	G	-4.4	30	0.00	0	0	276	283
346.22	10.9	13.8	15.2	2.89	4.28	1.39	G	-5.4	30	0.00	0	0	267	274
346.23	11.1	11.8	12.5	0.69	1.46	0.74	F	-5.6	32	0.00	0	0	260	277

DAILY SUMMARIES

3 METER TEMP --- AVG = 11.4 MAX = 22.3 MIN = 2.2 AVG DEW POINT = -1.7 TOTAL PRCP = 0.00

10 METER WINDS -- AVG SPEED = 1.5 AVG DIR = 212 PEAK SPEED = 8.7 , OCCURRED DURING HOUR 15

NUMBER OF HOURS PER STABILITY CLASS A = 5, B = 0, C = 1, D = 1, E = 1, F = 2, G = 14

WIPP METEOROLOGICAL DATA DAILY SUMMARY FOR 12/13/77

JULIAN DAY.HR	3 METER WIND DIR	SPD	PEAK SPD	TURB INT	10 METER WIND DIR	SPD	PEAK SPD	TURB INT	30 METER WIND DIR	SPD	PEAK SPD	TURB INT	BAROM PRESS
347.0	353	3.4	5.4	0.09	349	4.9	7.0	0.07	349	7.2	9.0	0.06	892.7
347.1	340	4.9	7.8	0.14	336	6.7	10.1	0.13	334	8.7	12.4	0.13	893.6
347.2	340	5.0	8.0	0.09	336	6.8	10.1	0.07	333	8.8	11.8	0.06	894.5
347.3	339	2.8	4.1	0.10	333	4.3	5.8	0.07	330	6.3	8.2	0.05	895.4
347.4	347	2.5	3.8	0.10	340	4.1	5.7	0.08	338	6.1	7.9	0.07	896.0
347.5	340	2.4	3.8	0.10	335	4.0	6.1	0.07	336	5.9	8.3	0.10	896.3
347.6	290	1.0	2.7	1.06	306	1.8	4.3	0.63	330	2.9	6.5	0.38	897.2
347.7	320	0.9	3.8	1.06	311	1.9	5.4	0.86	313	2.9	6.4	0.65	897.9
347.8	257	0.7	1.3	0.57	257	1.4	2.4	0.40	263	2.3	4.0	0.24	898.4
347.9	313	1.3	2.9	0.62	313	1.6	3.5	0.57	316	1.8	4.5	0.32	898.9
347.10	353	1.7	3.8	0.47	348	2.1	4.0	0.42	346	2.3	4.4	0.40	899.0
347.11	325	1.8	4.1	0.47	323	2.1	3.6	0.39	322	2.4	4.2	0.36	899.0
347.12	325	1.8	4.1	0.66	321	2.2	4.1	0.55	318	2.4	4.8	0.49	897.7
347.13	305	1.9	4.1	0.50	303	2.2	4.4	0.57	300	2.6	4.8	0.34	896.7
347.14	280	2.0	5.4	0.66	278	2.4	5.6	0.63	277	2.8	5.2	0.49	896.1
347.15	250	2.2	4.3	0.44	249	2.6	4.9	0.42	251	2.9	5.2	0.36	896.1
347.16	245	2.3	3.9	0.33	241	2.7	4.4	0.28	245	3.0	5.1	0.24	896.3
347.17	190	1.0	2.2	0.50	185	1.6	2.5	0.33	199	1.8	2.6	0.32	896.1
347.18	129	1.1	1.6	0.10	158	3.1	4.0	0.12	172	3.7	5.8	0.08	896.3
347.19	134	1.3	2.1	0.12	145	3.7	4.5	0.10	169	5.7	6.3	0.07	896.5
347.20	126	1.1	1.8	0.20	140	3.3	4.6	0.07	165	5.1	6.4	0.08	896.3
347.21	140	1.0	1.9	0.12	152	3.1	3.8	0.06	171	4.7	5.6	0.06	896.0
347.22	166	0.7	1.6	0.62	166	2.4	3.7	0.15	178	4.7	6.2	0.10	895.6
347.23	105	0.7	1.4	0.56	163	1.7	2.7	0.17	178	3.2	4.2	0.08	895.6

JULIAN DAY.HR	TEMPERATURES 3 M	10 M	30 M	DELTA TEMPS 10-3	30-3	30-10	STAB CLASS	DEW POINT	REL HUM	PRCP	RADIATION PARAMETERS SW SKY	SW REF	LW SKY	LW REF
347.0	10.2	10.8	11.6	0.61	1.35	0.70	F	-5.6	32	0.00	0	0	254	274
347.1	10.7	11.2	11.6	0.45	0.87	0.39	F	-6.2	30	0.00	0	0	251	277
347.2	10.4	10.7	10.9	0.33	0.56	0.19	E	-6.4	33	0.00	0	0	249	276
347.3	7.9	8.6	9.3	0.69	1.41	0.68	F	-5.9	39	0.00	0	0	244	265
347.4	6.4	7.3	8.2	0.91	1.83	0.88	G	-5.8	46	0.00	0	0	243	260
347.5	4.3	6.0	7.2	1.68	2.83	1.12	G	-5.4	50	0.00	0	0	239	254
347.6	3.0	4.3	4.9	1.22	1.90	0.64	F	-5.5	52	0.00	0	0	236	246
347.7	3.1	4.2	5.3	1.09	2.19	1.06	G	-6.2	57	0.00	0	0	238	247
347.8	3.0	3.7	5.0	0.67	2.00	1.29	G	-2.8	53	0.00	74	16	241	254
347.9	7.4	7.3	7.1	-0.11	-0.26	-0.18	D	-1.5	50	0.00	258	58	254	286
347.10	9.8	9.5	9.3	-0.28	-0.55	-0.30	D	-0.9	45	0.00	427	93	262	311
347.11	11.8	11.4	11.1	-0.38	-0.67	-0.32	C	-0.8	38	0.00	547	119	272	335
347.12	13.3	12.9	12.5	-0.41	-0.77	-0.39	A	-0.9	36	0.00	586	126	277	349
347.13	14.4	14.0	13.5	-0.41	-0.85	-0.47	A	-1.2	32	0.00	582	125	280	356
347.14	15.3	14.8	14.4	-0.43	-0.84	-0.44	A	-2.3	29	0.00	503	108	279	352
347.15	15.5	15.1	14.8	-0.37	-0.72	-0.38	A	-2.7	28	0.00	368	80	275	340
347.16	15.4	15.2	14.9	-0.27	-0.58	-0.34	B	-3.0	29	0.00	191	40	271	322
347.17	14.1	14.5	14.5	0.41	0.37	-0.06	E	-3.5	33	0.00	28	4	266	296
347.18	9.5	12.5	13.6	2.93	4.11	1.15	G	-4.1	42	0.00	0	0	258	273
347.19	7.7	9.6	12.0	1.85	4.32	2.44	G	-3.7	45	0.00	0	0	254	267
347.20	7.0	8.9	11.1	1.89	4.13	2.22	G	-3.6	49	0.00	0	0	250	262
347.21	6.2	8.4	10.1	2.22	3.91	1.66	G	-3.7	51	0.00	0	0	247	254
347.22	5.3	7.2	9.2	1.89	3.85	1.93	G	-4.0	54	0.00	0	0	243	250
347.23	4.5	7.1	8.2	2.55	3.68	1.10	G	-3.7	51	0.00	0	0	242	245

DAILY SUMMARIES

3 METER TEMP --- AVG = 9.0 MAX = 15.5 MIN = 3.0 AVG DEW POINT = -3.7 TOTAL PRCP = 0.00

10 METER WINDS -- AVG SPEED = 1.2 AVG DIR = 313 PEAK SPEED = 10.1 , OCCURRED DURING HOUR 2

NUMBER OF HOURS PER STABILITY CLASS A = 4 , B = 1, C = 1, D = 2, E = 2, F = 4, G = 10

WIPP METEOROLOGICAL DATA DAILY SUMMARY FOR 12/14/77

JULIAN DAY.HR	3 METER WIND DIR	SPD	PEAK SPD	TURB INT	10 METER WIND DIR	SPD	PEAK SPD	TURB INT	30 METER WIND DIR	SPD	PEAK SPD	TURB INT	BAROM PRESS
348.0	115	0.9	1.9	0.69	140	1.7	4.0	0.10	156	3.1	5.6	0.16	895.6
348.1	123	1.1	1.6	0.24	135	2.0	4.5	0.15	162	4.1	5.5	0.09	895.3
348.2	90	1.1	2.2	0.36	113	0.8	2.6	0.15	183	1.9	4.6	0.17	895.3
348.3	86	1.0	1.4	0.21	135	0.8	1.9	0.08	225	0.5	0.8	0.36	894.9
348.4	105	1.0	1.4	0.15	145	1.7	2.3	0.11	216	1.2	1.6	0.15	894.6
348.5	149	0.5	2.3	1.55	186	1.7	3.0	0.44	219	2.5	4.3	0.23	894.5
348.6	94	1.1	2.3	0.94	151	1.0	2.7	0.91	172	2.1	3.8	0.67	894.5
348.7	74	1.2	2.1	0.39	110	1.9	3.7	0.13	156	3.6	4.3	0.14	894.5
348.8	143	1.1	3.1	0.32	147	2.6	3.9	0.17	166	4.0	5.1	0.13	894.7
348.9	193	2.5	3.9	0.24	191	2.9	4.2	0.22	192	3.2	4.8	0.22	895.0
348.10	191	1.3	2.6	0.36	189	1.5	2.9	0.32	187	1.6	2.5	0.36	895.0
348.11	185	2.3	4.1	0.39	183	2.6	4.0	0.34	185	2.8	4.0	0.32	894.2
348.12	199	1.8	3.2	0.58	197	2.1	3.5	0.35	201	2.3	3.6	0.28	893.4
348.13	228	1.8	3.8	0.52	224	2.1	4.4	0.47	224	2.3	4.6	0.41	892.6
348.14	214	1.9	3.4	0.29	213	2.2	3.7	0.24	215	2.4	3.9	0.22	891.9
348.15	221	2.1	3.9	0.39	221	2.5	4.2	0.34	223	2.8	4.8	0.31	891.5
348.16	223	1.9	3.5	0.53	223	2.3	3.9	0.50	226	2.5	4.4	0.48	891.5
348.17	180	0.8	2.1	0.68	9999	999.9	999.9	99.99	187	1.8	2.6	0.18	891.6
348.18	106	1.1	2.2	0.68	162	1.5	4.0	0.46	180	2.0	4.3	0.60	891.5
348.19	137	1.2	2.6	0.33	160	2.7	4.7	0.20	182	2.5	4.2	0.26	891.5
348.20	112	0.9	1.9	0.44	152	2.5	4.5	0.24	185	2.7	3.9	0.26	891.7
348.21	79	1.2	2.1	0.57	125	2.1	4.1	0.35	160	2.3	4.1	0.26	891.7
348.22	66	1.4	2.1	0.32	117	0.7	2.6	0.38	116	0.9	2.9	0.58	891.7
348.23	72	1.3	2.2	0.27	64	0.5	2.4	1.71	347	0.7	3.4	1.10	891.7

JULIAN DAY.HR	TEMPERATURES 3 M	10 M	30 M	DELTA TEMPS 10-3	30-3	30-10	STAB CLASS	DEW POINT	REL HUM	PRCP	RADIATION PARAMETERS SW SKY	SW REF	LW SKY	LW REF
348.0	5.0	7.2	8.7	2.12	3.67	1.53	G	-4.2	56	0.00	0	0	271	246
348.1	4.6	7.3	10.2	2.69	5.64	2.92	G	-3.9	53	0.00	0	0	241	246
348.2	4.3	7.0	11.0	2.76	6.73	3.94	G	-5.2	55	0.00	0	0	241	246
348.3	2.9	10.0	11.0	7.12	8.12	0.96	G	-6.6	47	0.00	0	0	244	243
348.4	3.7	9.7	10.7	5.94	6.95	0.98	G	-6.9	46	0.00	0	0	245	241
348.5	1.2	4.7	6.9	3.46	5.66	2.17	G	-7.3	55	0.00	0	0	235	235
348.6	0.7	3.6	5.0	2.95	4.38	1.40	G	-7.7	61	0.00	0	0	236	234
348.7	1.0	5.3	10.3	4.26	9.12	4.98	G	-7.7	45	0.00	0	0	241	238
348.8	5.3	6.6	8.4	1.30	3.12	1.78	G	-6.9	35	0.00	84	20	248	257
348.9	8.2	8.1	8.0	-0.12	-0.20	-0.17	D	-6.8	31	0.00	371	62	251	284
348.10	11.2	11.1	10.8	-0.13	-0.37	-0.27	D	-7.5	24	0.00	420	92	265	316
348.11	14.3	14.0	13.6	-0.28	-0.60	-0.35	B	-7.9	19	0.00	523	121	273	396
348.12	16.6	16.3	16.0	-0.27	-0.61	-0.36	B	-8.5	16	0.00	578	133	286	435
348.13	18.0	17.7	17.4	-0.28	-0.62	-0.36	B	-9.2	15	0.00	515	116	294	442
348.14	18.8	18.6	18.2	-0.26	-0.59	-0.35	B	-8.6	14	0.00	382	86	291	429
348.15	19.9	19.7	19.4	-0.26	-0.58	-0.34	B	-7.9	14	0.00	345	80	287	427
348.16	20.3	20.1	19.9	-0.18	-0.43	-0.27	D	-8.6	14	0.00	194	42	287	410
348.17	19.0	19.4	19.5	0.40	0.51	0.08	E	-12.8	12	0.00	41	7	281	379
348.18	13.0	17.7	18.3	4.71	5.36	0.62	F	-10.9	20	0.00	0	0	272	348
348.19	11.1	15.3	15.9	4.17	4.81	0.61	F	-10.5	23	0.00	0	0	268	329
348.20	9.5	12.8	14.5	3.32	5.02	1.66	G	-10.5	26	0.00	0	0	264	328
348.21	7.3	11.0	13.2	3.62	5.90	2.24	G	-10.9	33	0.00	0	0	258	315
348.22	4.5	11.5	13.2	6.99	8.66	1.63	G	-9.7	29	0.00	0	0	250	308
348.23	6.4	12.1	13.1	5.65	6.69	1.00	G	-9.7	27	0.00	0	0	263	309

DAILY SUMMARIES

3 METER TEMP => AVG = 9.5 MAX = 20.3 MIN = 0.7 AVG DEW POINT = -8.2 TOTAL PRCP = 0.00

10 METER WINDS => AVG SPEED = 1.5 AVG DIR = 170 PEAK SPEED = 4.7 , OCCURRED DURING HOUR 19

NUMBER OF HOURS PER STABILITY CLASS A = 0 , B = 5, C = 0, D = 3, E = 1, F = 2, G = 13

WIPP METEOROLOGICAL DATA DAILY SUMMARY FOR 12/15/77

JULIAN DAY.HR	3 METER WIND DIR	SPD	PEAK SPD	TURB INT	10 METER WIND DIR	SPD	PEAK SPD	TURB INT	30 METER WIND DIR	SPD	PEAK SPD	TURB INT	BAROM PRESS
349. 0	43	1.4	1.8	0.24	345	1.8	2.3	0.22	307	2.7	4.0	0.15	891.7
349. 1	55	1.6	2.2	0.25	12	1.4	3.2	0.60	324	2.2	4.9	0.21	891.6
349. 2	42	1.5	2.5	0.26	352	2.0	2.9	0.49	327	2.8	4.4	0.37	891.5
349. 3	42	2.0	2.8	0.20	13	3.3	4.2	0.28	339	4.1	5.2	0.24	891.2
349. 4	55	1.8	2.7	0.22	18	2.3	3.9	0.31	337	2.9	4.6	0.17	890.9
349. 5	46	1.7	2.3	0.18	3	1.7	2.3	0.20	335	2.4	3.0	0.18	890.9
349. 6	53	1.6	2.3	0.24	17	1.6	2.5	0.48	333	2.2	3.2	0.12	890.8
349. 7	59	1.9	2.5	0.13	35	1.8	2.4	0.10	338	1.3	2.1	0.39	890.8
349. 8	123	0.9	1.7	0.56	135	1.4	3.7	0.50	161	1.5	3.7	0.34	891.0
349. 9	136	0.9	2.0	0.31	138	0.9	2.8	0.22	147	1.5	2.6	0.28	891.2
349.10	201	1.1	3.1	0.63	197	1.3	3.1	0.57	197	1.3	3.1	0.56	891.2
349.11	219	2.2	3.7	0.28	217	2.5	4.3	0.24	218	2.7	4.3	0.20	890.3
349.12	229	2.3	4.1	0.37	228	2.6	4.6	0.33	227	2.9	4.5	0.28	888.7
349.13	242	3.0	5.2	0.30	241	3.4	6.0	0.26	243	3.8	6.3	0.23	887.1
349.14	9999	999.9	999.9	99.99	9999	999.9	999.9	99.99	9999	999.9	999.9	99.99	9999.0
349.15	9999	999.9	999.9	99.99	9999	999.9	999.9	99.99	9999	999.9	999.9	99.99	9999.0
349.16	9999	999.9	999.9	99.99	9999	999.9	999.9	99.99	9999	999.9	999.9	99.99	9999.0
349.17	215	4.0	6.9	0.17	213	5.4	9.4	0.16	216	6.8	10.1	0.15	9999.0
349.18	219	1.8	3.6	0.12	223	3.7	5.2	0.10	229	5.4	6.6	0.12	884.6
349.19	192	1.4	2.9	0.27	200	3.0	5.0	0.18	214	5.1	7.4	0.20	884.6
349.20	175	1.2	2.6	0.27	187	2.7	4.7	0.09	201	4.5	6.8	0.14	884.6
349.21	236	1.9	6.2	0.52	236	3.4	7.4	0.40	243	5.9	11.5	0.26	884.2
349.22	249	4.3	8.0	0.17	248	6.0	10.2	0.16	250	8.3	13.1	0.13	884.2
349.23	241	4.5	6.2	0.18	237	6.2	8.5	0.17	237	8.4	10.7	0.16	883.8

JULIAN DAY.HR	TEMPERATURES 3 M	10 M	30 M	DELTA TEMPS 10-3	30-3	30-10	STAB CLASS	DEW POINT	REL HUM	PRCP	RADIATION PARAMETERS SW SKY	SW REF	LW SKY	LW REF
349. 0	7.3	11.9	13.0	4.58	5.64	1.03	G	-10.9	25	0.00	0	0	264	311
349. 1	4.9	11.7	13.1	6.84	8.15	1.37	G	-10.3	27	0.00	0	0	263	307
349. 2	7.4	12.2	12.9	4.75	5.51	0.73	F	-11.0	28	0.00	0	0	264	310
349. 3	5.5	10.7	12.6	5.10	7.10	1.97	G	-10.8	28	0.00	0	0	258	307
349. 4	5.3	10.3	12.3	4.98	6.96	1.94	G	-10.8	28	0.00	0	0	258	305
349. 5	6.4	11.4	11.9	5.03	5.50	0.44	F	-11.0	30	0.00	0	0	261	306
349. 6	5.2	11.4	12.6	6.20	7.34	1.15	G	-11.1	34	0.00	0	0	259	303
349. 7	3.3	11.3	12.6	8.00	9.33	1.30	G	-10.9	33	0.00	0	0	255	299
349. 8	5.4	8.4	11.0	2.92	5.53	2.60	G	-8.7	26	0.00	75	18	257	316
349. 9	12.5	12.4	12.9	-0.04	0.38	0.40	F	-8.6	20	0.00	253	62	274	366
349.10	15.0	14.9	14.7	-0.16	-0.36	-0.23	D	-8.9	18	0.00	419	95	279	401
349.11	16.3	16.0	15.6	-0.34	-0.70	-0.36	A	-8.2	17	0.00	538	124	283	423
349.12	18.2	17.9	17.5	-0.32	-0.70	-0.40	A	-7.6	15	0.00	593	138	291	445
349.13	20.2	19.8	19.3	-0.45	-0.95	-0.54	A	-7.2	14	0.00	584	136	296	458
349.14	999.9	999.9	999.9	99.99	99.99	99.99		999.9	9999	99.99	9999	9999	9999	9999
349.15	999.9	999.9	999.9	99.99	99.99	99.99		999.9	9999	99.99	9999	9999	9999	9999
349.16	999.9	999.9	999.9	99.99	99.99	99.99		999.9	9999	99.99	9999	9999	9999	9999
349.17	19.5	19.8	20.0	0.34	0.58	0.20	E	-5.8	19	0.00	7	0	285	305
349.18	15.3	17.2	16.4	1.95	3.13	1.14	G	-5.8	25	0.00	0	0	280	357
349.19	13.1	15.0	17.2	1.89	4.13	2.21	G	-5.4	27	0.00	0	0	278	342
349.20	11.6	13.4	14.8	1.83	3.19	1.32	G	-5.5	33	0.00	0	0	272	333
349.21	12.5	14.2	15.9	1.71	3.39	1.65	G	-5.2	25	0.00	0	0	277	339
349.22	16.1	16.8	17.7	0.73	1.65	0.89	G	-4.7	25	0.00	0	0	288	362
349.23	15.7	16.3	16.9	0.59	1.23	0.60	F	-4.8	24	0.00	0	0	276	360

DAILY SUMMARIES

3 METER TEMP --- AVG = 11.3 MAX = 20.2 MIN = 3.3 AVG DEW POINT = -8.2 TOTAL PRCP = 0.00

10 METER WINDS -- AVG SPEED = 1.3 AVG DIR = 240 PEAK SPEED = 10.2 , OCCURRED DURING HOUR 22

NUMBER OF HOURS PER STABILITY CLASS A = 3 , B = 0, C = 0, D = 1, E = 1, F = 4, G = 12

WIPP METEOROLOGICAL DATA DAILY SUMMARY FOR 12/16/77

JULIAN DAY.HR	3 METER WIND DIR	SPD	PEAK SPD	TURB INT	10 METER WIND DIR	SPD	PEAK SPD	TURB INT	30 METER WIND DIR	SPD	PEAK SPD	TURB INT	BAROM PRESS
350. 0	223	2.6	5.3	0.21	221	4.0	6.4	0.19	223	6.1	8.9	0.16	882.8
350. 1	244	2.5	4.5	0.23	242	4.0	6.3	0.19	242	6.2	8.6	0.14	881.6
350. 2	254	2.8	5.4	0.22	252	4.6	7.4	0.18	249	6.9	10.3	0.15	881.6
350. 3	248	1.8	4.9	0.47	245	3.1	7.1	0.32	244	4.5	8.5	0.26	881.4
350. 4	268	6.0	11.1	0.20	266	7.8	14.0	0.18	264	10.0	16.0	0.14	881.6
350. 5	265	8.4	12.7	0.20	263	10.8	16.7	0.20	262	13.3	19.3	0.17	882.1
350. 6	259	9.7	15.1	0.12	257	12.3	18.7	0.11	256	14.7	21.3	0.09	882.0
350. 7	266	9.1	13.7	0.14	265	11.6	16.5	0.13	265	13.8	20.6	0.11	882.5
350. 8	282	10.4	14.7	0.11	280	13.2	18.1	0.08	278	16.2	21.6	0.07	883.8
350. 9	278	10.2	13.9	0.12	276	12.9	17.4	0.10	275	15.5	19.3	0.08	884.6
350.10	275	10.4	14.1	0.13	274	13.0	17.4	0.11	273	15.6	20.0	0.09	885.5
350.11	280	10.7	14.5	0.15	278	13.6	18.2	0.13	277	16.1	20.4	0.11	885.3
350.12	282	10.2	14.8	0.15	280	12.9	19.2	0.13	279	15.5	21.4	0.11	884.7
350.13	280	11.3	14.2	0.14	278	14.2	18.5	0.13	277	17.0	21.5	0.11	884.6
350.14	294	11.9	16.2	0.15	291	15.2	21.1	0.13	289	18.2	24.3	0.11	884.6
350.15	297	11.8	16.0	0.13	294	15.1	20.1	0.11	292	18.2	24.3	0.10	885.1
350.16	294	11.0	15.8	0.12	291	14.1	20.0	0.11	289	16.8	22.3	0.10	885.3
350.17	285	10.3	14.3	0.11	282	13.3	18.6	0.09	281	16.3	20.8	0.08	885.3
350.18	285	9.5	14.4	0.11	283	12.1	17.7	0.08	281	15.0	21.5	0.07	886.5
350.19	295	9.1	13.2	0.14	293	11.7	16.8	0.13	291	14.3	19.9	0.12	887.3
350.20	314	5.6	8.7	0.10	310	7.5	10.4	0.08	307	9.6	12.7	0.08	887.9
350.21	331	3.6	5.3	0.08	326	5.2	6.7	0.07	323	7.3	9.0	0.06	888.7
350.22	340	2.5	3.8	0.11	334	3.9	5.4	0.09	331	6.2	7.6	0.06	889.5
350.23	343	3.1	5.7	0.19	338	4.5	7.3	0.18	335	6.5	9.1	0.15	890.4

JULIAN DAY.HR	TEMPERATURES 3 M	10 M	30 M	DELTA TEMPS 10-3	30-3	30-10	STAB CLASS	DEW POINT	REL HUM	PRCP	RADIATION PARAMETERS SW SKY	SW REF	LW SKY	LW REF
350. 0	14.5	15.4	16.1	0.86	1.66	0.77	F	-5.2	29	0.00	0	0	274	351
350. 1	13.9	14.9	16.2	1.08	2.34	1.23	G	-4.7	28	0.00	0	0	274	347
350. 2	13.5	14.7	16.2	1.23	2.73	1.47	G	-4.3	26	0.00	0	0	274	345
350. 3	13.4	15.1	16.3	1.74	2.92	1.15	G	-4.6	26	0.00	0	0	275	341
350. 4	15.9	16.4	16.9	0.50	0.95	0.41	F	-4.3	23	0.00	0	0	290	362
350. 5	16.3	16.6	16.7	0.27	0.42	0.12	E	-3.7	26	0.00	0	0	297	369
350. 6	15.4	15.7	15.8	0.27	0.38	0.08	E	-3.5	27	0.00	0	0	278	365
350. 7	15.0	15.2	15.3	0.23	0.32	0.05	E	-3.0	28	0.00	0	0	275	362
350. 8	15.1	15.3	15.2	0.12	0.09	-0.06	E	-2.4	29	0.00	67	15	274	360
350. 9	15.8	15.8	15.6	-0.03	-0.21	-0.20	D	-3.2	26	0.00	250	63	274	381
350.10	16.9	16.7	16.3	-0.23	-0.59	-0.39	A	-5.7	20	0.00	426	106	277	398
350.11	17.9	17.6	17.1	-0.34	-0.80	-0.49	A	-7.9	16	0.00	541	135	283	413
350.12	18.5	18.1	17.5	-0.43	-0.99	-0.59	A	-10.0	13	0.00	601	147	281	422
350.13	18.7	18.2	17.7	-0.42	-0.97	-0.58	A	-10.7	13	0.00	585	144	278	423
350.14	18.7	18.4	18.0	-0.33	-0.73	-0.43	A	-11.1	13	0.00	464	116	269	418
350.15	18.1	17.8	17.5	-0.25	-0.56	-0.36	B	-11.1	13	0.00	372	96	257	402
350.16	17.3	17.2	17.0	-0.09	-0.29	-0.23	D	-12.0	13	0.00	198	52	250	386
350.17	16.0	16.1	16.1	0.13	0.10	-0.06	E	-14.2	12	0.00	32	8	242	369
350.18	14.8	15.1	15.1	0.23	0.31	0.04	E	-14.9	12	0.00	0	0	236	350
350.19	14.4	14.6	14.7	0.26	0.37	0.07	E	-15.4	12	0.00	0	0	233	354
350.20	12.6	12.9	13.1	0.34	0.57	0.20	E	-17.2	12	0.00	0	0	227	341
350.21	10.3	10.8	11.3	0.51	0.99	0.44	F	-19.3	12	0.00	0	0	222	320
350.22	8.1	8.9	9.7	0.76	1.57	0.78	F	-21.4	11	0.00	0	0	216	315
350.23	7.5	8.2	8.8	0.68	1.30	0.58	F	-19.9	12	0.00	0	0	256	312

DAILY SUMMARIES

3 METER TEMP ---, AVG = 14.9 MAX = 18.7 MIN = 7.5 AVG DEW POINT = -9.6 TOTAL PRCP = 0.00

10 METER WINDS --, AVG SPEED = 9.4 AVG DIR = 280 PEAK SPEED = 21.1 , OCCURRED DURING HOUR 14

NUMBER OF HOURS PER STABILITY CLASS A = 5 , B = 1, C = 0, D = 2, E = 8, F = 5, G = 3

WIPP METEOROLOGICAL DATA DAILY SUMMARY FOR 12/17/77

JULIAN DAY.HR	3 METER WIND DIR	SPD	PEAK SPD	TURB INT	10 METER WIND DIR	SPD	PEAK SPD	TURB INT	30 METER WIND DIR	SPD	PEAK SPD	TURB INT	BAROM PRESS
351. 0	38	2.7	5.4	0.22	32	4.1	6.8	0.17	25	5.5	7.9	0.11	890.8
351. 1	40	2.6	3.4	0.06	31	4.4	5.3	0.06	19	6.0	7.3	0.07	890.8
351. 2	44	2.8	3.7	0.05	34	4.8	6.0	0.05	19	6.1	7.9	0.05	891.2
351. 3	45	1.9	2.8	0.12	33	3.8	4.7	0.07	15	5.6	6.3	0.05	891.2
351. 4	28	1.8	2.7	0.17	19	3.4	4.6	0.09	9	5.6	6.8	0.04	891.3
351. 5	3	1.7	2.8	0.36	358	3.5	4.8	0.28	354	3.8	7.1	0.17	891.6
351. 6	307	0.7	2.9	1.50	300	1.9	4.9	1.09	302	3.5	6.9	0.85	892.3
351. 7	75	0.7	2.1	0.58	334	0.4	2.0	1.95	304	2.4	3.9	0.70	893.4
351. 8	356	1.2	3.2	0.35	351	2.5	4.2	0.16	350	4.4	5.9	0.09	893.4
351. 9	309	1.5	3.0	0.33	310	1.7	3.3	0.28	312	1.9	3.3	0.25	894.2
351.10	299	2.1	3.5	0.28	297	2.4	3.8	0.24	294	2.6	3.8	0.25	894.2
351.11	250	2.4	4.6	0.32	248	2.7	4.7	0.26	249	3.0	4.7	0.19	893.4
351.12	260	2.9	5.1	0.32	258	3.4	5.7	0.28	259	3.7	5.9	0.24	892.3
351.13	241	2.8	4.5	0.36	239	3.2	5.2	0.33	240	3.7	5.7	0.25	891.6
351.14	244	3.1	5.6	0.38	241	3.6	6.4	0.36	243	4.1	6.7	0.32	890.8
351.15	248	3.8	6.0	0.28	245	4.5	6.9	0.26	246	5.0	7.1	0.23	890.6
351.16	250	3.7	5.9	0.26	248	4.5	7.2	0.23	250	5.3	7.8	0.20	890.4
351.17	243	2.1	4.2	0.17	243	3.3	5.4	0.13	246	4.8	6.4	0.09	890.3
351.18	263	1.7	3.8	0.39	262	3.1	5.2	0.26	263	5.3	7.2	0.14	890.2
351.19	145	0.7	2.4	0.64	181	1.3	2.9	0.60	210	1.7	4.3	0.66	890.8
351.20	108	0.9	2.0	0.38	144	1.7	3.9	0.18	188	1.6	3.1	0.48	891.2
351.21	97	0.6	1.5	0.77	161	1.0	3.7	0.58	216	1.2	3.2	0.70	891.4
351.22	108	1.2	2.0	0.20	140	1.7	4.2	0.11	165	1.3	3.2	0.34	891.4
351.23	118	1.3	2.0	0.14	142	3.1	4.5	0.12	170	2.5	4.2	0.08	891.6

JULIAN DAY.HR	TEMPERATURES 3 M	10 M	30 M	DELTA TEMPS 10-3	30-3	30-10	STAB CLASS	DEW POINT	REL HUM	PRCP	RADIATION PARAMETERS SW SKY	SW REF	LW SKY	LW REF
351. 0	3.3	4.1	4.7	0.84	1.38	0.51	F	-16.5	25	0.00	0	0	204	296
351. 1	1.0	3.0	4.1	2.00	3.16	1.13	G	-16.0	29	0.00	0	0	204	286
351. 2	-0.0	2.7	4.3	2.73	4.36	1.58	G	-15.5	30	0.00	0	0	203	282
351. 3	-0.8	2.2	4.2	2.99	5.00	1.97	G	-16.1	32	0.00	0	0	207	277
351. 4	-0.2	2.5	3.9	2.65	4.12	1.43	G	-16.6	27	0.00	0	0	206	277
351. 5	-0.0	2.6	4.2	2.71	4.33	1.59	G	-16.4	26	0.00	0	0	210	276
351. 6	-0.9	0.6	2.2	1.56	3.13	1.54	G	-16.7	32	0.00	0	0	207	274
351. 7	-3.2	-0.5	2.9	2.70	6.13	3.40	G	-17.4	37	0.00	0	0	207	265
351. 8	0.6	2.3	4.4	1.78	3.81	1.99	G	-14.6	24	0.00	81	22	228	292
351. 9	5.7	5.6	5.5	-0.10	-0.26	-0.19	D	-14.9	19	0.00	260	66	239	332
351.10	8.1	7.8	7.6	-0.29	-0.52	-0.26	D	-15.1	16	0.00	429	106	244	365
351.11	10.6	10.3	10.0	-0.27	-0.58	-0.34	C	-15.0	14	0.00	549	134	254	395
351.12	13.1	12.7	12.3	-0.37	-0.77	-0.43	A	-13.6	14	0.00	608	148	261	416
351.13	14.3	13.8	13.3	-0.47	-0.98	-0.54	A	-12.2	14	0.00	599	145	264	424
351.14	15.7	15.2	14.7	-0.48	-0.02	-0.48	A	-11.0	14	0.00	524	127	267	423
351.15	16.8	16.4	15.9	-0.45	-0.90	-0.47	A	-10.6	14	0.00	381	94	269	411
351.16	17.4	17.1	16.8	-0.27	-0.61	-0.37	B	-11.1	13	0.00	208	52	272	395
351.17	15.1	15.7	16.2	0.60	1.10	0.46	F	-13.5	14	0.00	17	2	267	362
351.18	12.7	13.6	14.6	0.92	1.92	0.97	G	-12.6	17	0.00	0	0	255	348
351.19	10.0	12.4	13.0	2.44	3.00	0.53	F	-13.4	20	0.00	0	0	250	323
351.20	8.1	10.9	12.6	2.81	4.48	1.68	G	-12.6	23	0.00	0	0	252	315
351.21	7.7	11.7	12.6	4.03	4.90	0.84	G	-11.3	28	0.00	0	0	255	311
351.22	6.8	11.2	12.1	4.74	5.74	0.96	G	-11.8	27	0.00	0	0	252	305
351.23	5.7	9.9	11.6	4.24	5.93	1.65	G	-11.6	27	0.00	0	0	249	304

DAILY SUMMARIES

3 METER TEMP --- AVG = 7.0 MAX = 17.4 MIN = -3.2 AVG DEW POINT = -14.0 TOTAL PRCP = 0.00

10 METER WINDS -- AVG SPEED = 0.8 AVG DIR = 298 PEAK SPEED = 7.2 , OCCURRED DURING HOUR 16

NUMBER OF HOURS PER STABILITY CLASS A = 4 , B = 1, C = 1, D = 2, E = 0, F = 3, G = 13

WIPP METEOROLOGICAL DATA DAILY SUMMARY FOR 12/18/87

JULIAN DAY.HR	3 METER WIND DIR	3 METER WIND SPD	3 METER WIND PEAK SPD	3 METER WIND TURB INT	10 METER WIND DIR	10 METER WIND SPD	10 METER WIND PEAK SPD	10 METER WIND TURB INT	30 METER WIND DIR	30 METER WIND SPD	30 METER WIND PEAK SPD	30 METER WIND TURB INT	BAROM PRESS
352. 0	98	1.2	1.8	0.30	133	1.0	4.2	0.15	166	1.6	3.9	0.21	891.0
352. 1	104	0.7	1.8	0.65	126	1.0	3.7	0.29	160	2.6	5.0	0.23	890.[illegible]
352. 2	70	0.7	1.6	0.67	172	0.9	2.9	0.96	239	2.6	5.3	0.62	890.5
352. 3	143	0.9	2.8	0.80	180	2.1	4.2	0.36	218	3.7	5.9	0.34	890.5
352. 4	153	1.0	2.5	0.29	181	2.7	4.4	0.13	203	4.0	4.8	0.06	889.9
352. 5	134	1.2	2.4	0.31	175	2.2	3.2	0.13	221	3.0	4.3	0.24	889.9
352. 6	64	1.4	2.4	0.23	82	0.4	1.4	0.88	224	1.2	2.1	0.20	890.1
352. 7	86	1.0	1.7	0.32	151	0.7	1.9	0.33	231	1.4	2.7	0.38	890.5
352. 8	255	1.8	4.0	0.27	254	3.0	5.0	0.24	261	4.4	7.3	0.15	890.6
352. 9	270	3.3	5.3	0.21	268	4.1	6.8	0.19	268	5.2	7.1	0.14	891.2
352.10	277	3.6	5.8	0.20	276	4.3	7.0	0.17	275	4.8	7.5	0.14	891.0
352.11	260	3.7	5.8	0.45	258	4.4	7.2	0.45	258	5.0	8.0	0.39	890.4
352.12	233	4.9	9.7	0.30	232	6.0	11.2	0.27	234	6.8	12.1	0.24	889.0
352.13	242	5.3	9.2	0.28	241	6.4	10.8	0.27	243	7.3	11.4	0.25	887.9
352.14	253	4.3	7.8	0.40	251	5.2	9.5	0.37	251	5.9	9.9	0.33	887.0
352.15	248	3.4	7.6	0.51	246	4.2	8.7	0.50	248	4.9	8.8	0.46	886.4
352.16	263	2.7	5.8	0.51	262	3.4	6.9	0.50	262	4.1	7.3	0.44	886.4
352.17	281	3.8	6.3	0.33	280	5.1	7.8	0.31	280	6.6	9.7	0.28	886.5
352.18	300	3.6	6.9	0.15	296	5.1	8.5	0.13	293	7.3	11.9	0.10	887.2
352.19	223	0.8	2.8	1.07	237	1.6	3.6	0.90	262	2.8	6.4	0.68	887.5
352.20	261	1.5	4.0	0.59	258	2.8	5.4	0.47	259	4.9	8.1	0.36	887.7
352.21	203	1.4	3.6	0.55	205	2.3	4.5	0.39	219	3.3	5.0	0.35	888.2
352.22	233	1.8	3.4	0.42	231	3.1	5.1	0.29	237	4.5	7.1	0.26	888.6
352.23	33	1.0	3.0	0.80	16	1.3	3.4	1.09	333	1.2	5.1	1.69	889.0

JULIAN DAY.HR	TEMPERATURES 3 M	10 M	30 M	DELTA TEMPS 10-3	30-3	30-10	STAB CLASS	DEW POINT	REL HUM	PRCP	RADIATION PARAMETERS SW SKY	SW REF	LW SKY	LW REF
352. 0	5.0	10.0	11.4	4.92	6.41	1.45	G	-11.5	29	0.00	0	0	251	300
352. 1	5.3	7.1	11.0	1.79	5.71	3.89	G	-10.8	30	0.00	0	0	249	301
352. 2	5.2	9.4	12.0	4.24	6.90	2.61	G	-8.3	31	0.00	0	0	252	300
352. 3	4.7	8.0	11.1	3.32	6.42	3.06	G	-7.9	39	0.00	0	0	250	297
352. 4	5.3	8.6	10.6	3.25	5.35	2.06	G	-7.8	38	0.00	0	0	251	296
352. 5	4.6	7.9	9.9	3.26	5.33	2.03	G	-8.5	37	0.00	0	0	252	295
352. 6	2.6	9.4	10.5	6.72	7.84	1.09	G	-9.8	44	0.00	0	0	254	297
352. 7	3.8	10.1	11.4	6.25	7.63	1.35	G	-8.6	38	0.00	0	0	258	228
352. 8	10.0	11.8	12.6	1.78	2.61	0.79	F	-6.0	29	0.00	79	21	263	329
352. 9	13.8	13.8	13.9	0.04	0.12	0.05	E	-5.5	24	0.00	261	67	271	367
352.10	16.3	16.1	15.8	-0.21	-0.46	-0.28	D	-4.6	21	0.00	428	107	280	400
352.11	18.2	17.8	17.4	-0.39	-0.78	-0.42	A	-4.5	20	0.00	548	135	287	406
352.12	19.8	19.2	18.6	-0.58	-1.16	-0.60	A	-4.7	18	0.00	608	149	293	441
352.13	20.6	20.0	19.4	-0.58	-1.17	-0.62	A	-6.1	16	0.00	571	139	295	444
352.14	20.9	20.4	19.9	-0.50	-0.93	-0.47	A	-6.8	15	0.00	467	123	295	439
352.15	20.9	20.7	20.4	-0.25	-0.55	-0.33	C	-7.7	14	0.00	257	60	298	421
352.16	21.0	20.9	20.7	-0.10	-0.30	-0.23	D	-8.7	13	0.00	163	39	289	407
352.17	19.8	20.0	20.2	0.26	0.46	0.16	E	-11.3	12	0.00	37	8	280	387
352.18	17.5	18.1	18.7	0.60	1.23	0.61	F	-10.8	15	0.00	0	0	272	369
352.19	13.9	15.0	15.9	1.13	2.04	0.88	G	-10.6	16	0.00	0	0	264	343
352.20	14.5	15.8	17.2	1.36	2.77	1.38	G	-11.1	15	0.00	0	0	271	347
352.21	12.8	14.9	16.3	2.02	3.47	1.42	G	-11.0	18	0.00	0	0	265	336
352.22	12.9	14.8	16.5	1.86	3.61	1.72	G	-11.0	17	0.00	0	0	264	336
352.23	12.1	14.4	15.6	2.35	3.55	1.17	G	-11.6	17	0.00	0	0	259	327

DAILY SUMMARIES

3 METER TEMP ---, AVG = 12.6 MAX = 21.0 MIN = 2.6 AVG DEW POINT = -8.6 TOTAL PRCP = 0.00

10 METER WINDS --, AVG SPEED = 2.4 AVG DIR = 286 PEAK SPEED = 11.2 , OCCURRED DURING HOUR 12

NUMBER OF HOURS PER STABILITY CLASS A = 4 , B = 0, C = 1, D = 2, E = 2, F = 2, G = 13

WIPP METEOROLOGICAL DATA DAILY SUMMARY FOR 12/19/77

JULIAN DAY.HR	3 METER WIND DIR	SPD	PEAK SPD	TURB INT	10 METER WIND DIR	SPD	PEAK SPD	TURB INT	30 METER WIND DIR	SPD	PEAK SPD	TURB INT	BAROM PRESS
353. 0	343	1.5	2.8	0.59	319	3.0	5.3	0.48	305	3.7	6.6	0.39	889.1
353. 1	317	1.8	5.1	0.22	296	3.8	6.8	0.16	292	5.0	7.9	0.14	889.1
353. 2	340	2.3	5.1	0.26	325	4.3	6.7	0.15	313	6.1	9.2	0.10	889.4
353. 3	315	2.9	4.3	0.12	309	4.8	5.9	0.09	304	7.7	8.9	0.06	889.7
353. 4	302	3.5	4.7	0.09	299	5.1	6.3	0.06	297	7.9	9.5	0.04	889.8
353. 5	320	2.0	5.2	0.43	310	3.4	7.0	0.21	301	5.7	9.1	0.10	890.1
353. 6	305	1.6	3.9	0.32	298	2.9	5.3	0.20	294	4.8	7.4	0.13	891.2
353. 7	305	2.9	5.0	0.16	301	4.6	6.8	0.13	296	6.7	8.9	0.10	891.7
353. 8	51	2.1	5.1	0.43	42	3.0	5.9	0.50	28	4.0	7.2	0.71	892.7
353. 9	66	2.2	3.5	0.16	60	2.6	3.7	0.13	60	3.1	4.1	0.11	893.4
353.10	34	0.7	3.3	1.44	28	0.9	3.6	1.26	25	1.0	3.9	1.17	894.2
353.11	13	0.7	3.5	1.23	1	0.9	3.7	1.12	357	1.0	3.7	1.19	893.7
353.12	5	1.8	5.7	0.69	358	2.1	6.8	0.63	354	2.3	6.6	0.58	893.0
353.13	329	1.2	5.7	1.09	322	1.6	6.0	0.89	318	1.9	6.0	0.79	891.6
353.14	305	1.3	5.1	1.25	302	1.7	5.7	1.12	300	1.9	6.1	1.03	891.2
353.15	211	2.1	4.8	0.58	208	2.4	5.4	0.57	210	2.7	6.1	0.58	891.2
353.16	177	2.1	4.3	0.47	175	2.7	4.8	0.42	175	3.1	6.1	0.40	891.2
353.17	156	1.7	3.3	0.24	156	3.0	4.1	0.23	158	4.3	5.9	0.22	891.4
353.18	113	1.9	5.1	0.12	114	2.4	6.5	0.11	121	5.7	8.4	0.14	892.3
353.19	94	3.8	9.3	0.17	90	5.1	11.9	0.19	94	6.5	12.6	0.16	893.4
353.20	68	4.6	7.8	0.24	64	5.9	9.7	0.21	67	7.1	11.1	0.20	895.0
353.21	46	5.0	6.9	0.15	42	6.3	8.4	0.14	42	8.1	10.2	0.11	896.4
353.22	55	4.3	6.3	0.11	51	5.5	7.3	0.10	51	7.3	9.0	0.10	897.8
353.23	62	3.6	5.0	0.10	58	4.7	6.0	0.08	59	6.5	7.7	0.07	898.4

JULIAN DAY.HR	TEMPERATURES 3 M	10 M	30 M	DELTA TEMPS 10-3	30-3	30-10	STAB CLASS	DEW POINT	REL HUM	PRCP	RADIATION PARAMETERS SW SKY	SW REF	LW SKY	LW REF
353. 0	11.9	15.2	16.1	3.32	4.25	0.89	G	-11.9	18	0.00	0	0	260	385
353. 1	11.1	14.7	16.2	3.55	5.10	1.51	G	-11.2	19	0.00	0	0	261	323
353. 2	10.7	13.0	15.3	2.24	4.56	2.29	G	-11.5	20	0.00	0	0	255	324
353. 3	11.2	12.5	14.6	1.25	3.38	2.09	G	-10.9	19	0.00	0	0	254	329
353. 4	11.8	12.5	13.5	0.70	1.73	1.00	G	-11.0	19	0.00	0	0	254	334
353. 5	10.4	11.[illegible]	12.3	1.00	1.90	0.87	G	-11.2	23	0.00	0	0	251	325
353. 6	10.2	11.4	12.3	1.16	2.06	0.86	G	-10.1	22	0.00	0	0	251	320
353. 7	10.7	11.8	12.9	1.11	2.23	1.10	G	-10.2	25	0.00	0	0	251	326
353. 8	7.7	8.3	9.9	0.58	2.21	1.60	G	-9.4	24	0.00	70	17	245	324
353. 9	12.1	12.0	11.9	-0.05	-0.17	-0.15	D	-7.7	22	0.00	256	65	269	362
353.10	14.1	14.0	13.8	-0.16	-0.35	-0.22	D	-7.1	22	0.00	408	99	271	396
353.11	15.2	14.9	14.6	-0.28	-0.54	-0.29	D	-6.8	20	0.00	475	112	280	414
353.12	16.5	16.0	15.6	-0.49	-0.90	-0.45	A	-6.4	20	0.00	618	147	286	430
353.13	17.2	16.8	16.4	-0.41	-0.78	-0.40	A	-6.7	18	0.00	574	130	286	405
353.14	18.2	17.8	17.4	-0.39	-0.75	-0.39	A	-8.2	16	0.00	545	121	286	443
353.15	18.7	18.3	17.9	-0.37	-0.75	-0.40	A	-8.5	15	0.00	356	86	283	485
353.16	18.0	17.9	17.7	-0.12	-0.32	-0.23	D	-8.8	16	0.00	145	34	280	397
353.17	15.2	15.8	16.3	0.57	1.06	0.46	F	-9.3	20	0.00	14	2	269	367
353.18	12.1	13.0	14.3	0.91	2.24	1.29	G	-6.0	28	0.00	0	0	271	347
353.19	11.6	11.7	11.9	0.13	0.33	0.17	E	-5.2	30	0.00	0	0	280	345
353.20	9.8	9.9	10.0	0.14	0.21	0.04	E	-6.0	35	0.00	0	0	266	336
353.21	7.6	7.7	7.8	0.14	0.24	0.07	E	-7.0	36	0.00	0	0	256	336
353.22	6.8	7.0	7.2	0.20	0.36	0.16	E	-7.6	37	0.00	0	0	249	361
353.23	5.9	6.1	6.4	0.25	0.55	0.26	E	-8.0	38	0.00	0	0	247	355

DAILY SUMMARIES

3 METER TEMP --- AVG = 12.3 MAX = 18.7 MIN = 5.9 AVG DEW POINT = -8.6 TOTAL PRCP = 0.00

10 METER WINDS -- AVG SPEED = 1.4 AVG DIR = 4 PEAK SPEED = 11.9 , OCCURRED DURING HOUR 19

NUMBER OF HOURS PER STABILITY CLASS A = 4 , B = 6, C = 0, D = 4, E = 5, F = 1, G = 10

WIPP METEOROLOGICAL DATA DAILY SUMMARY FOR 12/20/77

JULIAN DAY.HR	3 METER WIND DIR	SPD	PEAK SPD	TURB INT	10 METER WIND DIR	SPD	PEAK SPD	TURB INT	30 METER WIND DIR	SPD	PEAK SPD	TURB INT	BAROM PRESS
354. 0	73	3.6	5.0	0.12	67	4.9	6.2	0.10	69	6.9	8.3	0.07	898.9
354. 1	65	3.1	5.1	0.23	60	4.4	6.2	0.20	63	6.4	8.4	0.16	900.1
354. 2	24	2.4	6.1	0.30	19	3.6	7.9	0.29	15	5.1	9.5	0.28	900.4
354. 3	6	5.5	9.1	0.13	360	7.2	11.4	0.12	358	8.8	12.9	0.12	900.7
354. 4	10	5.6	9.7	0.13	3	7.2	11.6	0.12	2	8.8	13.2	0.12	900.7
354. 5	9	4.0	6.2	0.20	1	5.3	7.9	0.17	357	6.8	9.4	0.16	901.3
354. 6	352	5.1	7.9	0.11	348	6.8	9.9	0.08	346	8.7	10.9	0.07	902.6
354. 7	5	5.9	8.3	0.13	359	7.5	10.7	0.11	358	9.2	12.1	0.11	903.8
354. 8	23	4.3	5.9	0.10	17	5.4	7.3	0.10	18	6.6	9.0	0.08	905.1
354. 9	33	5.1	7.0	0.19	29	6.2	8.1	0.18	29	7.2	9.3	0.16	906.3
354.10	50	4.9	7.0	0.20	45	5.8	8.4	0.17	44	6.6	8.7	0.16	907.0
354.11	25	4.5	8.1	0.26	20	5.4	9.0	0.24	19	6.1	9.8	0.23	907.5
354.12	21	4.8	7.8	0.29	16	5.7	9.4	0.29	15	6.4	9.2	0.28	907.3
354.13	14	4.8	8.5	0.49	9	5.9	10.0	0.49	7	6.6	11.6	0.50	906.6
354.14	28	4.5	7.1	0.28	22	5.5	8.7	0.26	21	6.2	9.5	0.25	906.6
354.15	1	4.2	7.3	0.21	355	5.2	8.7	0.18	355	5.8	8.9	0.16	906.6
354.16	357	3.6	5.8	0.32	351	4.5	7.3	0.28	349	5.0	7.6	0.26	906.6
354.17	343	2.6	5.2	0.15	339	3.5	6.3	0.12	336	4.3	6.8	0.11	906.6
354.18	2	0.7	1.5	0.33	333	1.8	2.9	0.29	326	3.5	4.7	0.16	906.6
354.19	54	0.4	2.4	0.67	288	1.2	2.8	0.45	292	3.0	3.9	0.23	906.7
354.20	331	1.2	1.6	0.21	299	2.7	3.1	0.07	292	3.8	4.2	0.05	906.7
354.21	175	0.4	1.6	0.91	234	1.4	2.8	0.99	259	2.9	4.1	0.49	906.7
354.22	128	0.7	1.6	0.61	197	1.3	2.3	0.23	241	3.0	3.5	0.19	906.7
354.23	52	0.3	1.4	1.17	260	0.8	2.2	0.39	268	2.6	3.6	0.17	907.4

JULIAN DAY.HR	TEMPERATURES 3 M	10 M	30 M	DELTA TEMPS 10-3	30-3	30-10	STAB CLASS	DEW POINT	REL HUM	PRCP	RADIATION PARAMETERS SW SKY	SW REF	LW SKY	LW REF
354. 0	5.3	5.6	6.0	0.28	0.71	0.40	F	-7.8	37	0.00	0	0	255	313
354. 1	5.2	5.5	6.1	0.33	0.93	0.56	F	-7.9	39	0.00	0	0	255	312
354. 2	5.0	5.6	6.2	0.55	1.18	0.60	F	-11.5	26	0.00	0	0	273	314
354. 3	6.2	6.4	6.4	0.15	0.19	0.00	E	-17.5	17	0.00	0	0	263	318
354. 4	4.2	4.4	4.4	0.17	0.22	0.02	E	-15.4	24	0.00	0	0	222	305
354. 5	2.7	2.9	3.0	0.21	0.33	0.09	E	-15.3	26	0.00	0	0	219	298
354. 6	2.0	2.2	2.3	0.20	0.32	0.09	E	-14.8	28	0.00	0	0	219	295
354. 7	1.4	1.4	1.4	0.07	0.05	-0.06	E	-9.1	48	0.00	0	0	286	297
354. 8	0.2	0.1	0.0	-0.03	-0.14	-0.15	D	-6.8	57	0.00	75	19	211	295
354. 9	1.6	1.3	1.0	-0.26	-0.57	-0.34	C	-5.2	55	0.00	258	67	215	312
354.10	3.5	3.1	2.7	-0.45	-0.89	-0.47	A	-5.4	49	0.00	421	106	225	336
354.11	4.1	3.6	3.2	-0.51	-0.94	-0.45	A	-6.0	47	0.00	482	102	258	347
354.12	4.7	4.1	3.6	-0.63	-1.09	-0.50	A	-6.8	41	0.00	477	114	254	350
354.13	5.4	4.7	4.2	-0.67	-1.21	-0.57	A	-6.9	42	0.00	500	121	269	365
354.14	5.2	4.6	4.1	-0.65	-1.11	-0.49	A	-6.9	38	0.00	501	122	250	362
354.15	5.7	5.1	4.7	-0.57	-1.02	-0.48	A	-10.7	29	0.00	302	95	241	355
354.16	5.5	5.2	4.8	-0.38	-0.70	-0.35	B	-11.2	29	0.00	195	49	222	337
354.17	4.6	4.8	4.7	0.11	0.05	-0.10	E	-12.3	31	0.00	36	9	213	315
354.18	0.9	3.0	3.9	2.04	2.99	0.92	G	-13.4	37	0.00	0	0	205	286
354.19	-1.3	1.5	3.4	2.76	4.67	1.88	G	-13.4	38	0.00	0	0	203	278
354.20	-0.4	2.4	3.7	2.86	4.12	1.23	G	-12.7	39	0.00	0	0	205	273
354.21	-2.2	0.2	2.0	2.38	4.12	1.70	G	-14.3	43	0.00	0	0	199	266
354.22	-3.8	-1.1	0.4	2.71	4.21	1.47	G	-14.0	44	0.00	0	0	194	260
354.23	-3.6	-1.2	-0.4	2.36	3.18	0.79	F	-14.0	44	0.00	0	0	195	258

DAILY SUMMARIES

3 METER TEMP --- AVG = 2.6 MAX = 6.2 MIN = -3.8 AVG DEW POINT = -10.8 TOTAL PRCP = 0.00

10 METER WINDS -- AVG SPEED = 3.9 AVG DIR = 9 PEAK SPEED = 11.6 , OCCURRED DURING HOUR 4

NUMBER OF HOURS PER STABILITY CLASS A = 6 , B = 1, C = 1, D = 1, E = 6, F = 4, G = 5

WIPP METEOROLOGICAL DATA DAILY SUMMARY FOR 12/21/77

JULIAN DAY.HR	3 METER WIND DIR	SPD	PEAK SPD	TURB INT	10 METER WIND DIR	SPD	PEAK SPD	TURB INT	30 METER WIND DIR	SPD	PEAK SPD	TURB INT	BAROM PRESS
355. 0	65	1.3	2.1	0.21	40	0.5	1.5	0.40	271	1.1	2.3	0.27	907.4
355. 1	64	1.6	2.4	0.14	63	2.0	3.0	0.12	23	1.2	2.0	0.40	907.3
355. 2	61	0.5	1.9	0.71	54	1.4	2.8	0.33	88	3.5	5.3	0.12	907.4
355. 3	26	1.6	2.8	0.33	23	3.3	4.8	0.14	11	6.2	7.8	0.08	907.3
355. 4	179	0.4	1.9	1.25	315	0.1	2.7	6.28	1	2.0	4.6	0.40	907.4
355. 5	350	0.7	1.8	0.67	324	2.0	4.0	0.44	331	3.3	5.3	0.23	907.3
355. 6	266	0.5	2.0	0.84	264	1.3	3.1	0.55	290	2.0	3.8	0.51	907.8
355. 7	96	0.6	1.7	0.54	154	0.5	2.1	0.74	281	1.2	2.9	0.58	908.6
355. 8	56	1.4	2.1	0.27	41	1.7	2.6	0.25	358	2.4	3.2	0.20	909.0
355. 9	60	0.7	2.0	0.49	52	0.7	1.9	0.44	32	0.8	2.3	0.83	909.6
355.10	129	0.9	2.6	0.56	128	1.0	2.8	0.55	128	1.4	3.4	0.39	910.0
355.11	203	2.3	4.7	0.46	201	2.6	5.0	0.45	201	2.8	5.3	0.45	909.5
355.12	223	2.9	5.1	0.31	221	3.3	5.7	0.27	221	3.7	5.7	0.23	907.7
355.13	229	3.5	5.6	0.27	225	4.1	6.9	0.23	225	4.5	7.3	0.21	907.0
355.14	218	3.5	5.5	0.30	216	4.1	6.3	0.27	214	4.5	6.5	0.22	905.9
355.15	204	3.2	5.8	0.29	202	3.6	5.8	0.26	204	3.9	6.7	0.23	905.2
355.16	202	3.4	5.0	0.23	201	4.1	6.0	0.21	202	4.5	5.9	0.18	904.6
355.17	187	2.7	4.7	0.16	186	3.7	5.3	0.13	189	4.9	6.0	0.10	903.8
355.18	161	1.8	2.6	0.11	165	3.6	4.3	0.07	174	5.9	6.7	0.05	903.7
355.19	137	1.3	2.5	0.10	143	3.7	4.7	0.09	158	6.0	6.9	0.08	903.7
355.20	155	2.8	3.7	0.08	156	4.4	5.5	0.07	160	6.5	7.3	0.05	903.5
355.21	156	2.6	4.1	0.10	155	4.0	5.0	0.07	159	6.0	7.1	0.05	903.3
355.22	159	2.7	3.7	0.08	159	4.0	4.8	0.06	162	5.8	6.6	0.04	902.4
355.23	163	3.5	5.2	0.10	162	4.8	6.5	0.09	164	6.6	7.7	0.07	901.5

JULIAN DAY.HR	TEMPERATURES 3 M	10 M	30 M	DELTA TEMPS 10-3	30-3	30-10	STAB CLASS	DEW POINT	REL HUM	PRCP	RADIATION PARAMETERS SW SKY	SW REF	LW SKY	LW REF
355. 0	-7.4	-1.7	-1.0	5.58	6.40	0.78	F	-16.7	48	0.00	0	0	192	255
355. 1	-8.5	-2.0	-0.3	6.49	8.17	1.63	G	-16.4	55	0.00	0	0	186	250
355. 2	-8.4	-5.0	-1.8	3.40	6.65	3.21	G	-16.7	49	0.00	0	0	184	246
355. 3	-6.7	-5.0	-1.5	1.68	5.13	3.42	G	-17.8	41	0.00	0	0	187	251
355. 4	-8.2	-4.6	-2.9	3.59	5.37	1.74	G	-19.3	43	0.00	0	0	182	245
355. 5	-6.6	-2.9	-2.0	3.65	4.62	0.93	G	-18.4	34	0.00	0	0	186	246
355. 6	-7.3	-5.4	-3.2	1.89	4.11	2.19	G	-19.6	42	0.00	0	0	185	244
355. 7	-10.3	-7.5	-6.1	2.82	4.20	1.34	G	-18.9	47	0.00	0	0	187	242
355. 8	-7.8	-5.8	-4.4	2.00	3.34	1.30	G	-16.6	40	0.00	73	19	196	259
355. 9	-2.8	-2.8	-2.8	-0.06	-0.03	-0.00	E	-15.1	34	0.00	230	58	203	291
355.10	1.5	1.2	0.9	-0.23	-0.52	-0.32	C	-17.0	20	0.00	423	104	213	329
355.11	4.0	3.6	3.3	-0.39	-0.76	-0.40	A	-16.9	19	0.00	529	130	217	352
355.12	5.4	4.9	4.4	-0.49	-0.93	-0.47	A	-16.8	18	0.00	626	155	220	371
355.13	6.4	5.8	5.3	-0.57	-1.06	-0.52	A	-16.4	17	0.00	612	150	222	370
355.14	7.2	6.6	6.1	-0.57	-1.04	-0.50	A	-16.8	16	0.00	587	132	224	375
355.15	8.0	7.5	7.1	-0.46	-0.92	-0.49	A	-17.3	15	0.00	442	110	228	371
355.16	8.0	7.7	7.3	-0.35	-0.70	-0.38	B	-18.4	14	0.00	216	55	215	346
355.17	6.3	6.5	6.6	0.22	0.34	0.10	E	-22.4	13	0.00	33	7	212	318
355.18	2.4	3.7	5.1	1.30	2.73	1.40	G	-20.5	17	0.00	0	0	206	293
355.19	1.2	2.3	4.0	1.09	2.80	1.68	G	-20.0	18	0.00	0	0	222	291
355.20	2.0	2.5	3.4	0.55	1.40	0.81	G	-19.9	18	0.00	0	0	228	294
355.21	2.2	2.7	3.3	0.43	1.10	0.64	F	-19.6	18	0.00	0	0	250	298
355.22	2.8	3.2	3.7	0.35	0.86	0.47	F	-19.2	18	0.00	0	0	261	302
355.23	3.5	3.7	4.0	0.23	0.53	0.27	E	-19.4	17	0.00	0	0	272	307

DAILY SUMMARIES

3 METER TEMP --- AVG = -0.6 MAX = 8.0 MIN = -10.3 AVG DEW POINT = -18.2 TOTAL PRCP = 0.00

10 METER WINDS -- AVG SPEED = 1.5 AVG DIR = 176 PEAK SPEED = 6.9 , OCCURRED DURING HOUR 13

NUMBER OF HOURS PER STABILITY CLASS A = 5 , B = 1, C = 1, D = 0, E = 3, F = 3, G = 11

WIPP METEOROLOGICAL DATA DAILY SUMMARY FOR 12/22/77

JULIAN DAY.HR	3 METER WIND DIR	SPD	PEAK SPD	TURB INT	10 METER WIND DIR	SPD	PEAK SPD	TURB INT	30 METER WIND DIR	SPD	PEAK SPD	TURB INT	BAROM PRESS
356. 0	164	3.6	4.9	0.10	163	4.9	6.5	0.08	164	6.6	8.1	0.06	900.2
356. 1	158	3.7	5.4	0.09	158	5.1	7.1	0.07	160	6.9	8.9	0.05	899.8
356. 2	165	3.0	4.4	0.12	163	4.2	5.7	0.09	163	6.0	7.3	0.07	898.9
356. 3	152	3.6	4.9	0.09	152	5.1	6.7	0.07	154	6.9	8.9	0.07	898.2
356. 4	163	3.8	5.9	0.12	163	5.2	7.9	0.12	169	7.0	10.0	0.11	897.1
356. 5	172	5.4	7.4	0.10	172	7.0	9.1	0.08	175	9.3	10.9	0.05	896.4
356. 6	181	4.0	6.7	0.12	180	5.2	8.0	0.10	183	7.0	10.3	0.08	896.5
356. 7	180	3.5	5.7	0.08	179	4.7	6.7	0.07	184	6.6	8.3	0.05	896.5
356. 8	186	4.0	6.1	0.13	185	5.0	7.5	0.10	187	6.4	9.0	0.08	896.0
356. 9	184	4.3	6.8	0.13	183	5.2	7.9	0.11	185	6.1	8.3	0.10	896.0
356.10	192	3.7	7.5	0.34	191	4.6	9.3	0.33	194	5.5	9.4	0.32	896.0
356.11	211	4.5	6.4	0.14	209	5.6	7.9	0.13	210	6.4	8.5	0.12	895.6
356.12	213	4.3	6.0	0.15	211	5.3	7.1	0.13	213	6.0	7.9	0.12	894.5
356.13	206	3.8	5.5	0.14	206	4.7	6.6	0.12	209	5.3	7.2	0.10	893.0
356.14	200	3.9	999.9	0.19	199	4.7	999.9	0.15	201	5.1	999.9	0.14	9999.0
356.15	227	5.8	8.5	0.15	225	7.3	10.5	0.12	225	8.4	11.4	0.11	891.6
356.16	222	4.9	8.5	0.14	220	6.3	9.8	0.12	221	7.4	10.8	0.10	891.6
356.17	225	3.0	6.1	0.18	222	4.1	7.0	0.15	220	5.5	8.3	0.10	891.9
356.18	209	1.8	2.7	0.25	209	3.0	4.5	0.17	213	4.3	5.9	0.08	892.5
356.19	209	2.2	3.6	0.22	208	3.7	5.2	0.15	213	6.0	7.9	0.06	893.1
356.20	208	1.4	2.7	0.23	205	2.7	4.3	0.14	207	4.9	7.1	0.09	893.8
356.21	234	1.4	2.1	0.16	231	3.2	4.5	0.10	225	5.0	6.2	0.07	894.2
356.22	150	0.4	1.8	2.48	217	1.2	3.3	0.43	225	3.5	5.1	0.20	894.3
356.23	184	1.4	2.7	0.46	191	2.5	4.1	0.45	208	4.2	6.3	0.32	894.5

JULIAN DAY.HR	TEMPERATURES 3 M	10 M	30 M	DELTA TEMPS 10-3	30-3	30-10	STAB CLASS	DEW POINT	REL HUM	PRCP	RADIATION PARAMETERS SW SKY	SW REF	LW SKY	LW REF
356. 0	3.2	3.5	3.7	0.24	0.50	0.23	E	-19.9	16	0.00	0	0	255	304
356. 1	2.8	3.0	3.3	0.21	0.48	0.24	E	-19.7	17	0.00	0	0	261	303
356. 2	2.7	3.0	3.3	0.21	0.52	0.28	E	-19.8	17	0.00	0	0	273	304
356. 3	3.0	3.3	3.7	0.26	0.72	0.43	F	-20.4	16	0.00	0	0	256	303
356. 4	3.3	3.7	4.3	0.40	0.99	0.56	F	-20.7	15	0.00	0	0	235	301
356. 5	4.4	4.8	5.2	0.35	0.85	0.47	F	-21.3	13	0.00	0	0	222	303
356. 6	4.3	4.6	4.9	0.30	0.60	0.27	E	-21.6	14	0.00	0	0	261	304
356. 7	3.8	4.1	4.6	0.35	0.83	0.45	F	-21.1	14	0.00	0	0	258	304
356. 8	4.9	5.0	5.1	0.12	0.23	0.08	E	-20.1	13	0.00	53	12	278	316
356. 9	6.6	6.5	6.4	-0.07	-0.21	-0.17	D	-19.9	13	0.00	133	30	285	333
356.10	7.4	7.4	7.3	-0.04	-0.19	-0.17	D	-19.1	12	0.00	99	28	296	336
356.11	8.5	8.3	8.0	-0.20	-0.45	-0.28	D	-18.3	13	0.00	201	43	293	348
356.12	9.2	8.9	8.6	-0.25	-0.54	-0.31	C	-18.2	12	0.00	165	34	314	355
356.13	10.7	10.5	10.2	-0.19	-0.44	-0.28	D	-16.3	12	0.00	176	37	314	362
356.14	12.8	12.5	12.1	-0.33	-0.66	-0.35	B	999.9	9999	99.99	360	84	310	384
356.15	16.3	15.9	15.4	-0.44	-0.90	-0.48	A	-11.8	13	0.00	364	97	281	9999
356.16	15.5	15.4	15.2	-0.06	-0.21	-0.18	D	-14.1	12	0.00	133	30	285	9999
356.17	13.9	14.3	14.5	0.35	0.54	0.16	E	-16.1	12	0.00	16	2	285	433
356.18	11.9	13.1	13.5	1.19	1.71	0.49	F	-16.9	12	0.00	0	0	302	417
356.19	10.6	11.6	12.7	1.03	2.17	1.12	G	-16.2	13	0.00	0	0	293	408
356.20	9.8	10.6	11.7	0.76	1.86	1.07	G	-16.3	14	0.00	0	0	281	399
356.21	8.8	11.3	12.6	2.45	3.72	1.24	G	-16.3	15	0.00	0	0	291	393
356.22	10.4	11.9	13.4	1.52	2.99	1.45	G	-15.4	13	0.00	0	0	314	401
356.23	10.0	11.2	12.6	1.15	2.55	1.36	G	-15.5	16	0.00	0	0	306	402

DAILY SUMMARIES

3 METER TEMP --- AVG = 8.1 MAX = 16.3 MIN = 2.7 AVG DEW POINT = -18.0 TOTAL PRCP = 0.00

10 METER WINDS -- AVG SPEED = 4.2 AVG DIR = 192 PEAK SPEED = 10.5 , OCCURRED DURING HOUR 15

NUMBER OF HOURS PER STABILITY CLASS A = 1 , B = 1, C = 1, D = 8, E = 6, F = 5, G = 5

WIPP METEOROLOGICAL DATA DAILY SUMMARY FOR 12/23/77

JULIAN DAY.HR	3 METER WIND DIR	SPD	PEAK SPD	TURB INT	10 METER WIND DIR	SPD	PEAK SPD	TURB INT	30 METER WIND DIR	SPD	PEAK SPD	TURB INT	BAROM PRESS
357.0	214	0.5	1.9	1.12	208	1.5	3.2	0.35	221	3.8	6.4	0.20	894.5
357.1	298	0.0	1.7	6.28	236	1.1	3.1	0.56	229	3.9	6.0	0.23	894.5
357.2	209	1.0	2.1	0.39	214	2.2	3.8	0.20	222	4.1	5.5	0.14	894.5
357.3	87	0.2	1.4	2.81	210	0.9	2.4	0.52	224	3.0	4.5	0.22	894.3
357.4	245	0.6	2.0	1.11	246	2.0	4.0	0.33	244	3.8	5.3	0.15	894.6
357.5	170	0.9	2.0	0.48	199	2.2	3.3	0.32	226	3.2	4.7	0.16	894.5
357.6	62	1.2	1.9	0.33	70	0.5	1.9	1.91	285	0.5	1.9	2.43	894.8
357.7	76	0.9	2.2	0.47	59	1.3	2.9	0.52	31	1.0	2.5	0.45	895.6
357.8	114	0.3	1.4	1.71	209	0.7	1.7	0.63	237	1.7	2.6	0.31	896.3
357.9	197	1.0	2.0	0.38	211	1.7	2.9	0.26	234	2.9	4.0	0.13	896.4
357.10	271	3.7	8.1	0.26	268	4.6	9.5	0.24	268	5.6	11.0	0.20	896.4
357.11	284	4.4	7.5	0.18	281	5.4	8.8	0.16	280	6.3	10.0	0.14	896.0
357.12	276	3.8	6.8	0.19	274	4.7	8.1	0.17	273	5.4	9.5	0.14	895.2
357.13	243	2.7	4.3	0.44	241	3.2	5.2	0.48	242	3.5	5.3	0.38	894.3
357.14	219	1.4	3.4	0.44	217	1.7	4.0	0.37	220	1.9	4.5	0.36	893.2
357.15	260	2.5	4.6	0.29	257	3.0	5.6	0.24	256	3.6	5.6	0.22	893.2
357.16	260	2.8	4.5	0.21	258	3.8	5.8	0.19	258	4.9	7.0	0.16	893.1
357.17	260	2.3	3.9	0.36	259	3.3	5.0	0.33	260	4.4	7.1	0.26	892.8
357.18	224	1.5	4.0	0.40	229	2.7	5.1	0.36	240	4.6	7.5	0.31	892.6
357.19	239	2.7	6.8	0.30	241	3.9	8.1	0.24	251	5.4	9.0	0.16	892.8
357.20	264	3.4	8.4	0.37	263	4.6	9.9	0.33	263	6.3	11.9	0.23	893.8
357.21	278	3.7	7.2	0.18	275	5.0	8.6	0.15	273	6.5	10.2	0.12	894.1
357.22	287	4.3	7.4	0.16	285	5.7	8.6	0.14	282	7.5	10.2	0.13	894.5
357.23	260	2.9	5.6	0.19	260	3.9	6.5	0.19	262	5.3	9.4	0.19	895.0

JULIAN DAY.HR	TEMPERATURES 3 M	10 M	30 M	DELTA TEMPS 10-3	30-3	30-10	STAB CLASS	DEW POINT	REL HUM	PRCP	RADIATION PARAMETERS SW SKY	SW REF	LW SKY	LW REF
357.0	8.7	9.9	11.8	1.28	3.18	1.87	G	-15.3	17	0.00	0	0	294	390
357.1	9.5	10.6	12.4	1.14	2.91	1.74	G	-14.2	16	0.00	0	0	311	395
357.2	10.2	11.8	13.2	1.56	3.03	1.43	G	-14.0	17	0.00	0	0	317	400
357.3	10.0	11.6	13.2	1.55	3.15	1.59	G	-13.3	16	0.00	0	0	299	393
357.4	10.5	12.2	13.8	1.74	3.27	1.49	G	-12.3	19	0.00	0	0	307	396
357.5	10.1	12.5	14.1	2.37	4.03	1.63	G	-12.5	20	0.00	0	0	305	394
357.6	7.8	13.0	14.2	5.13	6.41	1.24	G	-11.7	25	0.00	0	0	311	395
357.7	8.2	12.9	13.9	4.64	5.66	0.98	G	-12.2	22	0.00	0	0	309	393
357.8	10.2	12.5	13.5	2.31	3.34	1.00	G	-11.4	19	0.00	20	3	318	404
357.9	11.9	12.6	13.3	0.74	1.47	0.74	F	-10.7	17	0.00	97	22	316	426
357.10	15.9	15.8	15.6	-0.11	-0.32	-0.23	D	-7.7	17	0.00	262	64	328	472
357.11	17.4	17.2	16.9	-0.22	-0.52	-0.32	C	-8.0	16	0.00	290	69	336	489
357.12	18.3	18.1	17.8	-0.24	-0.54	-0.33	C	-6.1	18	0.00	252	59	342	496
357.13	18.2	17.9	17.6	-0.25	-0.54	-0.32	C	-6.8	18	0.00	222	50	339	494
357.14	18.5	18.3	18.1	-0.19	-0.43	-0.27	D	-5.7	18	0.00	251	59	335	502
357.15	19.2	19.1	18.9	-0.09	-0.27	-0.21	D	-4.6	20	0.00	130	28	342	492
357.16	18.7	18.8	18.9	0.13	0.17	0.02	E	-4.1	21	0.00	49	8	343	477
357.17	17.8	18.2	18.5	0.36	0.62	0.24	E	-4.2	23	0.00	8	1	340	464
357.18	15.6	16.4	17.4	0.80	1.79	0.96	G	-4.2	27	0.00	0	0	331	446
357.19	15.7	16.3	16.9	0.56	1.19	0.61	F	-3.2	27	0.00	0	0	337	448
357.20	16.1	16.4	16.7	0.38	0.68	0.27	E	-3.5	25	0.00	0	0	341	451
357.21	16.2	16.4	16.5	0.22	0.37	0.12	E	-4.6	25	0.00	0	0	344	458
357.22	16.1	16.3	16.4	0.20	0.32	0.10	E	-5.5	22	0.00	0	0	349	453
357.23	15.5	15.7	15.9	0.25	0.42	0.14	E	-5.6	24	0.00	0	0	348	449

DAILY SUMMARIES

3 METER TEMP -- AVG = 14.0 MAX = 19.2 MIN = 7.8 AVG DEW POINT = -8.4 TOTAL PRCP = 0.00

10 METER WINDS -- AVG SPEED = 2.5 AVG DIR = 255 PEAK SPEED = 9.9 , OCCURRED DURING HOUR 20

NUMBER OF HOURS PER STABILITY CLASS A = 0 , B = 0, C = 3, D = 3, E = 6, F = 2, G = 10

WIPP METEOROLOGICAL DATA DAILY SUMMARY FOR 12/24/77

JULIAN DAY.HR	3 METER WIND DIR	SPD	PEAK SPD	TURB INT	10 METER WIND DIR	SPD	PEAK SPD	TURB INT	30 METER WIND DIR	SPD	PEAK SPD	TURB INT	BAROM PRESS
358. 0	273	3.6	6.0	0.13	271	4.8	7.5	0.12	270	6.6	9.2	0.10	894.9
358. 1	281	3.1	4.1	0.17	279	4.5	5.4	0.15	280	6.5	7.6	0.14	894.1
358. 2	312	2.0	3.4	0.34	307	3.4	5.1	0.28	301	5.3	7.3	0.24	893.5
358. 3	310	1.7	3.4	0.41	303	3.3	5.2	0.28	297	4.8	7.1	0.24	893.4
358. 4	344	1.7	3.5	0.35	324	3.3	5.5	0.20	315	4.6	6.6	0.23	893.4
358. 5	292	2.4	4.7	0.14	288	4.0	5.9	0.10	285	5.9	7.8	0.07	893.4
358. 6	286	2.7	5.2	0.11	283	4.4	7.1	0.07	281	6.4	9.0	0.05	893.0
358. 7	294	2.2	3.0	0.13	289	4.0	4.7	0.08	282	6.3	7.3	0.06	894.5
358. 8	340	0.8	2.3	0.99	316	1.7	4.3	0.52	297	3.7	7.5	0.22	894.9
358. 9	315	1.0	3.1	0.70	309	1.2	3.6	0.56	301	1.7	3.7	0.42	896.1
358.10	301	3.5	6.4	0.24	298	4.3	7.9	0.21	296	4.9	8.1	0.18	896.3
358.11	312	3.7	5.7	0.32	309	4.5	7.6	0.30	307	5.0	7.1	0.28	896.3
358.12	314	3.8	6.7	0.33	310	4.6	7.7	0.31	307	5.3	7.7	0.28	895.2
358.13	294	3.8	7.7	0.36	292	4.6	8.5	0.32	291	5.3	8.3	0.29	894.3
358.14	299	4.1	6.6	0.31	296	4.9	8.3	0.27	293	5.6	9.1	0.26	894.1
358.15	301	4.1	6.4	0.27	298	5.1	8.1	0.24	295	5.8	8.4	0.21	894.1
358.16	328	3.4	5.9	0.24	323	4.2	6.9	0.21	320	4.9	7.5	0.20	893.9
358.17	338	2.5	4.7	0.34	334	3.4	5.5	0.30	333	4.4	6.6	0.30	894.2
358.18	21	1.9	2.5	0.13	5	3.6	4.9	0.13	355	5.4	6.4	0.04	894.6
358.19	358	2.0	3.7	0.18	349	3.2	5.0	0.16	345	4.1	7.1	0.14	895.5
358.20	13	1.6	3.2	0.35	1	2.8	4.8	0.26	354	4.7	7.0	0.15	896.0
358.21	317	1.0	3.0	1.13	310	2.2	4.2	0.78	307	4.1	6.4	0.58	896.3
358.22	322	1.2	2.0	0.28	295	2.9	3.8	0.16	289	5.1	6.6	0.11	896.7
358.23	56	1.5	2.2	0.38	32	1.9	3.5	0.70	349	2.4	4.3	0.40	896.8

JULIAN DAY.HR	TEMPERATURES 3 M	10 M	30 M	DELTA TEMPS 10-3	30-3	30-10	STAB CLASS	DEW POINT	REL HUM	PRCP	RADIATION PARAMETERS SW SKY	SW REF	LW SKY	LW REF
358. 0	15.1	15.3	15.5	0.21	0.42	0.18	E	-5.8	24	0.00	0	0	346	447
358. 1	13.3	13.7	14.2	0.36	0.85	0.47	F	-6.1	27	0.00	0	0	306	430
358. 2	11.4	12.1	13.2	0.76	1.82	1.03	G	-3.9	37	0.00	0	0	301	418
358. 3	9.8	11.3	12.7	1.54	2.99	1.42	G	-2.7	42	0.00	0	0	276	401
358. 4	8.9	11.2	12.2	2.25	3.29	1.01	G	-1.1	47	0.00	0	0	276	395
358. 5	10.5	11.5	12.3	0.98	1.78	0.77	F	1.0	53	0.00	0	0	275	404
358. 6	9.6	10.5	11.4	0.85	1.83	0.95	G	1.4	58	0.00	0	0	268	399
358. 7	8.1	9.2	10.8	1.05	2.67	1.58	G	0.9	63	0.00	0	0	265	392
358. 8	7.9	8.6	9.6	0.66	1.68	0.99	G	1.2	62	0.00	39	0	268	395
358. 9	10.2	10.2	10.2	0.04	0.05	-0.02	E	2.2	51	0.00	197	52	272	486
358.10	13.6	13.3	12.9	-0.35	-0.68	-0.37	B	1.6	41	0.00	406	107	281	470
358.11	15.8	15.2	14.8	-0.55	-0.97	-0.45	A	0.1	34	0.00	528	137	291	502
358.12	16.7	16.1	15.6	-0.61	-1.14	-0.56	A	-0.3	31	0.00	561	144	294	517
358.13	17.5	17.0	16.5	-0.57	-1.05	-0.51	A	-2.2	25	0.00	584	151	298	529
358.14	18.1	17.6	17.1	-0.55	-0.96	-0.44	A	-1.7	25	0.00	469	128	305	523
358.15	18.8	18.2	17.7	-0.58	-1.07	-0.51	A	-2.3	24	0.00	464	123	304	523
358.16	18.7	18.3	17.9	-0.35	-0.70	-0.38	B	-2.5	24	0.00	288	57	294	498
358.17	17.2	17.5	17.5	0.23	0.32	0.06	E	-4.1	27	0.00	36	0	288	461
358.18	12.9	15.1	16.6	2.15	3.66	1.48	G	-4.5	32	0.00	0	0	271	422
358.19	13.5	15.3	16.0	1.78	2.49	0.68	F	-6.1	27	0.00	0	0	270	419
358.20	11.0	13.2	14.4	2.22	3.43	1.18	G	-8.1	24	0.00	0	0	258	398
358.21	9.9	11.3	12.7	1.40	2.86	1.43	G	-7.9	32	0.00	0	0	258	394
358.22	8.2	10.4	12.8	2.20	4.65	2.45	G	-7.5	33	0.00	0	0	258	379
358.23	4.9	9.5	11.5	4.62	6.64	1.99	G	-9.3	38	0.00	0	0	246	367

DAILY SUMMARIES

3 METER TEMP --- AVG = 12.6 MAX = 18.8 MIN = 4.9 AVG DEW POINT = -2.8 TOTAL PRCP = 0.00

10 METER WINDS -- AVG SPEED = 3.2 AVG DIR = 307 PEAK SPEED = 8.5 , OCCURRED DURING HOUR 13

NUMBER OF HOURS PER STABILITY CLASS A = 5 , B = 2, C = 0, D = 0, E = 3, F = 3, G = 11

WIPP METEOROLOGICAL DATA DAILY SUMMARY FOR 12/85477

JULIAN DAY.HR	3 METER WIND DIR	SPD	PEAK SPD	TURB INT	10 METER WIND DIR	SPD	PEAK SPD	TURB INT	30 METER WIND DIR	SPD	PEAK SPD	TURB INT	BAROM PRESS
359.0	69	0.6	1.8	0.45	193	0.2	1.4	1.09	278	1.1	1.9	0.63	896.6
359.1	68	1.3	3.3	0.34	82	0.9	4.7	0.77	49	0.7	3.4	0.72	896.4
359.2	60	2.0	3.1	0.08	58	3.8	4.8	0.06	39	4.9	6.2	0.15	896.7
359.3	48	2.0	3.0	0.12	46	3.9	5.3	0.09	31	6.3	7.6	0.65	896.8
359.4	40	3.0	3.5	0.06	41	5.0	5.6	0.04	32	7.1	8.2	0.05	897.1
359.5	44	3.5	5.4	0.08	44	5.2	6.7	0.07	43	8.1	9.4	0.10	897.2
359.6	46	3.4	4.5	0.10	46	5.0	6.0	0.08	48	7.5	8.7	0.07	897.6
359.7	59	3.5	5.1	0.11	57	4.8	6.5	0.08	59	6.8	8.2	0.08	898.2
359.8	110	1.4	4.0	0.57	99	2.0	5.1	0.49	87	3.5	6.6	0.31	898.9
359.9	127	1.3	2.8	0.47	123	1.4	3.3	0.48	116	1.7	3.6	0.41	900.1
359.10	153	1.9	3.5	0.34	151	2.1	3.8	0.28	147	2.5	4.2	0.29	901.3
359.11	157	1.5	4.0	0.56	157	1.8	4.2	0.47	152	2.2	4.3	0.43	900.9
359.12	167	1.1	3.3	0.84	166	1.2	3.2	0.77	164	1.4	3.5	0.78	899.6
359.13	168	1.5	3.7	0.65	165	1.8	3.9	0.55	162	2.0	3.9	0.50	898.5
359.14	188	1.9	4.3	0.51	185	2.2	4.4	0.42	184	2.4	5.3	0.42	898.0
359.15	183	2.1	4.5	0.44	181	2.4	4.8	0.37	181	2.6	4.5	0.34	898.2
359.16	168	2.9	4.6	0.22	166	3.5	6.0	0.19	167	3.9	6.0	0.17	898.3
359.17	158	3.3	4.9	0.16	157	4.3	5.9	0.14	157	5.1	6.2	0.14	898.2
359.18	142	2.5	4.4	0.10	142	3.9	5.8	0.08	140	5.4	6.7	0.07	898.2
359.19	128	1.7	2.7	0.13	129	1.9	3.7	0.11	128	5.3	6.5	0.07	898.4
359.20	134	2.0	3.2	0.12	134	2.7	5.2	0.09	132	5.7	7.1	0.06	898.2
359.21	133	1.8	3.2	0.16	134	2.3	4.0	0.12	132	5.3	7.6	0.09	898.9
359.22	144	1.9	2.8	0.12	143	3.3	4.5	0.08	142	5.4	6.4	0.05	899.3
359.23	140	2.8	4.4	0.09	140	4.4	6.3	0.06	141	7.4	8.5	0.04	898.1

JULIAN DAY.HR	TEMPERATURES 3 M	10 M	30 M	DELTA TEMPS 10-3	30-3	30-10	STAB CLASS	DEW POINT	REL HUM	PRCP	RADIATION PARAMETERS SW SKY	SW REF	LW SKY	LW REF
359.0	2.2	8.0	10.0	5.73	7.77	2.00	G	-9.7	38	0.00	0	0	245	359
359.1	2.1	8.4	9.6	6.32	7.51	1.16	G	-9.3	42	0.00	0	0	245	387
359.2	3.2	5.8	9.2	2.54	5.98	3.41	G	-8.7	42	0.00	0	0	256	362
359.3	3.7	5.6	9.2	1.90	5.53	3.60	G	-8.5	37	0.00	0	0	255	367
359.4	5.5	6.8	10.1	1.30	4.61	3.28	G	-8.6	35	0.00	0	0	249	374
359.5	6.0	6.6	8.4	0.68	2.50	1.80	G	-9.4	32	0.00	0	0	247	377
359.6	5.5	6.0	7.2	0.51	1.76	1.22	G	-10.5	32	0.00	0	0	252	376
359.7	4.0	4.3	5.0	0.38	1.09	0.68	F	-9.4	37	0.00	0	0	236	367
359.8	3.3	3.4	3.9	0.12	0.67	0.52	F	-7.1	45	0.00	66	17	234	373
359.9	4.8	4.7	4.5	-0.14	-0.33	-0.22	D	-6.0	42	0.00	245	64	239	403
359.10	6.3	6.0	5.6	-0.32	-0.67	-0.38	B	-5.7	40	0.00	405	104	245	431
359.11	7.5	7.1	6.7	-0.35	-0.72	-0.39	A	-5.5	37	0.00	539	137	250	461
359.12	8.7	8.3	7.9	-0.37	-0.72	-0.38	A	-5.3	35	0.00	587	146	263	483
359.13	10.4	10.1	9.6	-0.38	-0.83	-0.48	A	-5.8	30	0.00	587	147	279	500
359.14	11.9	11.5	11.1	-0.41	-0.85	-0.47	A	-6.4	26	0.00	540	136	288	504
359.15	12.5	12.1	11.7	-0.36	-0.77	-0.43	A	-6.6	25	0.00	373	93	292	488
359.16	11.4	11.2	10.9	-0.23	-0.49	-0.29	D	-6.9	28	0.00	95	19	276	443
359.17	10.0	10.0	9.9	-0.00	-0.12	-0.14	D	-7.4	30	0.00	18	3	290	423
359.18	7.8	8.0	8.1	0.18	0.29	0.08	E	-8.0	34	0.00	0	0	265	401
359.19	5.8	6.0	6.2	0.23	0.45	0.20	E	-8.6	37	0.00	0	0	248	386
359.20	4.1	4.4	4.6	0.24	0.46	0.19	E	-9.8	38	0.00	0	0	243	376
359.21	2.9	3.1	3.3	0.21	0.41	0.17	E	-10.0	41	0.00	0	0	241	369
359.22	1.4	1.8	2.3	0.38	0.86	0.45	F	-10.6	42	0.00	0	0	227	356
359.23	0.8	1.2	1.8	0.32	0.98	0.63	F	-11.0	40	0.00	0	0	225	356

DAILY SUMMARIES

3 METER TEMP --- AVG = 5.9 MAX = 12.5 MIN = 0.8 AVG DEW POINT = -8.1 TOTAL PRCP = 0.00

10 METER WINDS -- AVG SPEED = 1.8 AVG DIR = 110 PEAK SPEED = 6.7 , OCCURRED DURING HOUR 5

NUMBER OF HOURS PER STABILITY CLASS . A = 4 , B = 2, C = 0, D = 3, E = 4, F = 4, G = 7

WIPP METEOROLOGICAL DATA DAILY SUMMARY FOR 12/26/77

JULIAN DAY.HR	3 METER WIND DIR	SPD	PEAK SPD	TURB INT	10 METER WIND DIR	SPD	PEAK SPD	TURB INT	30 METER WIND DIR	SPD	PEAK SPD	TURB INT	BAROM PRESS
360.0	148	2.5	4.3	0.11	147	4.0	5.8	0.09	146	6.0	8.0	0.07	898.0
360.1	131	1.6	2.6	0.13	132	2.1	4.2	0.09	134	5.8	6.6	0.08	897.5
360.2	129	1.7	2.4	0.11	130	1.9	3.4	0.08	128	6.0	6.8	0.05	897.2
360.3	118	1.6	2.5	0.11	118	1.3	3.2	0.09	128	5.4	6.6	0.07	896.3
360.4	126	1.6	3.4	0.20	128	1.6	4.9	0.18	132	5.0	6.5	0.13	895.6
360.5	121	1.2	2.5	0.36	117	1.5	3.5	0.33	132	4.3	6.0	0.15	895.4
360.6	122	0.9	2.1	0.64	128	1.4	3.5	0.45	152	3.3	4.5	0.21	896.0
360.7	29	0.7	1.9	0.64	45	0.5	2.2	1.07	153	1.3	2.6	0.43	896.3
360.8	43	1.3	2.5	0.23	39	1.6	2.7	0.85	16	0.4	2.9	1.27	896.0
360.9	8	1.3	3.3	0.73	2	1.5	3.6	0.70	358	1.8	4.3	0.66	896.7
360.10	303	1.8	3.1	0.31	300	2.1	3.9	0.25	299	2.4	3.7	0.23	897.1
360.11	12	1.9	3.7	0.35	6	2.2	3.8	0.33	5	2.4	3.7	0.30	897.0
360.12	6	3.0	4.9	0.28	360	3.5	5.8	0.25	359	3.9	6.5	0.24	896.7
360.13	355	4.8	7.5	0.19	350	5.9	9.2	0.15	348	6.8	9.9	0.14	896.1
360.14	6	3.4	6.2	0.24	1	4.1	7.1	0.22	1	4.6	7.6	0.21	896.1
360.15	36	3.0	5.1	0.38	31	3.6	5.9	0.37	31	4.1	6.3	0.37	896.1
360.16	64	2.9	4.5	0.18	59	3.5	5.4	0.17	61	3.9	5.8	0.17	896.4
360.17	76	3.0	4.6	0.10	70	4.0	5.4	0.09	72	5.0	6.7	0.08	897.0
360.18	80	2.3	3.2	0.14	74	3.7	4.4	0.12	75	5.7	6.6	0.11	897.6
360.19	86	3.1	5.6	0.09	80	4.5	6.6	0.08	84	6.4	8.0	0.05	898.3
360.20	92	3.8	5.6	0.10	86	5.2	7.5	0.11	88	6.8	8.7	0.07	899.2
360.21	97	3.9	5.7	0.09	93	5.4	7.9	0.10	93	6.9	8.7	0.05	900.0
360.22	99	4.4	6.6	0.09	95	5.9	9.0	0.10	95	7.4	10.3	0.06	900.1
360.23	102	4.4	8.1	0.11	100	5.9	11.1	0.12	100	7.5	12.0	0.09	900.4

JULIAN DAY.HR	TEMPERATURES 3 M	10 M	30 M	DELTA TEMPS 10-3	30-3	30-10	STAB CLASS	DEW POINT	REL HUM	PRCP	RADIATION PARAMETERS SW SKY	SW REF	LW SKY	LW REF
360.0	0.6	1.0	1.6	0.41	1.02	0.58	F	-11.8	41	0.00	0	0	223	352
360.1	-0.3	0.1	0.9	0.38	1.13	0.73	F	-12.0	40	0.00	0	0	230	349
360.2	0.1	0.3	0.7	0.18	0.65	0.43	F	-11.8	39	0.00	0	0	260	356
360.3	0.7	0.9	1.4	0.16	0.72	0.54	F	-11.4	39	0.00	0	0	271	361
360.4	1.1	1.3	1.8	0.18	0.75	0.54	F	-10.9	40	0.00	0	0	273	363
360.5	0.6	1.0	2.1	0.38	1.52	1.11	G	-11.3	43	0.00	0	0	247	355
360.6	0.5	1.0	2.6	0.50	2.07	1.55	G	-11.0	41	0.00	0	0	270	357
360.7	-0.8	0.9	2.1	1.70	2.94	1.21	G	-12.2	48	0.00	0	0	238	346
360.8	-0.3	0.8	2.5	1.03	2.74	1.64	G	-9.9	43	0.00	42	10	271	362
360.9	2.4	2.3	2.2	-0.14	-0.20	-0.09	E	-9.2	39	0.00	126	29	281	385
360.10	3.8	3.5	3.3	-0.27	-0.51	-0.27	D	-9.1	37	0.00	204	48	279	403
360.11	6.2	5.9	5.6	-0.36	-0.65	-0.32	C	-8.4	29	0.00	372	93	281	437
360.12	9.7	9.3	8.9	-0.46	-0.80	-0.36	B	-9.0	24	0.00	383	94	289	457
360.13	12.5	12.0	11.6	-0.49	-0.88	-0.42	A	-11.6	16	0.00	397	98	293	473
360.14	13.4	13.0	12.7	-0.40	-0.70	-0.33	C	-11.8	15	0.00	328	80	296	474
360.15	14.3	14.1	13.7	-0.28	-0.58	-0.32	C	-12.6	14	0.00	243	59	291	469
360.16	14.4	14.3	14.0	-0.19	-0.43	-0.27	D	-13.0	14	0.00	174	42	285	460
360.17	12.8	13.0	13.0	0.12	0.19	0.04	E	-13.7	16	0.00	33	5	271	450
360.18	9.5	10.0	10.8	0.48	1.29	0.79	F	-13.4	19	0.00	0	0	268	403
360.19	9.0	9.3	9.8	0.22	0.81	0.56	F	-12.9	19	0.00	0	0	290	403
360.20	9.3	9.2	9.3	-0.08	0.04	0.10	E	-12.9	20	0.00	0	0	306	408
360.21	8.9	8.8	8.9	-0.11	-0.03	0.05	E	-12.7	21	0.00	0	0	306	407
360.22	8.3	8.2	8.2	-0.13	-0.10	0.00	E	-12.4	22	0.00	0	0	310	405
360.23	7.5	7.4	7.4	-0.08	-0.11	-0.06	E	-12.4	23	0.00	0	0	302	401

DAILY SUMMARIES

3 METER TEMP --- AVG = 6.8 MAX = 14.4 MIN = -8.8 AVG DEW POINT = -11.6 TOTAL PRCP = 0.00

10 METER WINDS -- AVG SPEED = 2.1 AVG DIR = 70 PEAK SPEED = 11.1 , OCCURRED DURING HOUR 23

NUMBER OF HOURS PER STABILITY CLASS A = 1 , B = 1, C = 3, D = 2, E = 6, F = 7, G = 4

WIPP METEOROLOGICAL DATA DAILY SUMMARY FOR 12/27/77

JULIAN DAY.HR	3 METER WIND DIR	SPD	PEAK SPD	TURB INT	10 METER WIND DIR	SPD	PEAK SPD	TURB INT	30 METER WIND DIR	SPD	PEAK SPD	TURB INT	BAROM PRESS
361. 0	107	4.6	7.3	0.08	106	6.0	10.0	0.07	105	7.8	11.1	0.06	900.5
361. 1	112	4.3	7.0	0.09	111	4.9	8.4	0.08	109	7.9	10.1	0.07	900.4
361. 2	116	3.6	5.8	0.08	114	3.6	6.5	0.07	113	7.0	9.3	0.07	900.7
361. 3	114	4.3	6.9	0.08	112	4.8	9.5	0.06	112	7.8	11.1	0.06	901.0
361. 4	122	3.9	7.0	0.19	120	4.0	8.5	0.20	118	7.5	10.5	0.15	900.8
361. 5	144	3.3	5.6	0.13	141	4.4	7.0	0.10	139	5.8	8.0	0.10	901.2
361. 6	129	2.2	4.3	0.15	128	2.1	5.4	0.15	126	4.8	7.0	0.11	900.7
361. 7	134	2.0	3.3	0.14	133	2.3	4.3	0.10	130	4.4	6.8	0.09	901.2
361. 8	141	3.4	6.1	0.12	139	4.6	8.5	0.10	137	6.5	9.0	0.10	901.1
361. 9	136	3.3	5.8	0.16	135	3.9	7.8	0.12	132	6.6	9.8	0.11	901.2
361.10	141	4.0	6.2	0.12	140	5.4	8.6	0.08	137	7.0	9.5	0.09	901.4
361.11	9999	999.9	999.9	99.99	9999	999.9	999.9	99.99	9999	999.9	999.9	99.99	9999.0
361.12	9999	999.9	999.9	99.99	9999	999.9	999.9	99.99	9999	999.9	999.9	99.99	9999.0
361.13	164	4.1	6.0	0.22	162	5.1	7.4	0.20	162	5.6	8.2	0.19	897.9
361.14	170	4.2	6.3	0.19	168	5.0	7.5	0.16	169	5.6	7.6	0.14	897.2
361.15	167	4.3	6.9	0.18	166	5.2	7.2	0.16	166	5.7	7.4	0.14	896.5
361.16	173	4.0	6.0	0.15	172	4.9	6.9	0.13	173	5.4	6.8	0.13	896.5
361.17	169	4.0	5.5	0.14	168	4.9	6.9	0.12	168	5.7	7.2	0.11	896.1
361.18	172	3.9	5.4	0.09	170	4.8	6.4	0.07	171	5.7	7.2	0.07	895.7
361.19	165	3.1	4.6	0.17	164	3.9	5.6	0.16	164	4.6	6.4	0.16	895.7
361.20	170	3.4	4.9	0.12	168	4.3	5.7	0.09	167	4.9	6.2	0.09	896.1
361.21	158	2.9	4.3	0.12	157	3.8	5.4	0.10	156	4.4	5.9	0.09	895.7
361.22	160	2.2	3.5	0.13	159	3.1	4.5	0.10	159	4.1	5.8	0.08	895.7
361.23	160	2.0	3.7	0.21	158	3.1	4.8	0.17	156	4.8	6.3	0.13	895.7

JULIAN DAY.HR	TEMPERATURES 3 M	10 M	30 M	DELTA TEMPS 10-3	30-3	30-10	STAB CLASS	DEW POINT	REL HUM	PRCP	RADIATION PARAMETERS SW SKY	SW REF	LW SKY	LW REF
361. 0	6.8	6.8	6.7	-0.00	-0.04	-0.07	E	-12.0	25	0.00	0	0	297	397
361. 1	6.2	6.2	6.1	0.00	-0.06	-0.10	E	-11.3	28	0.00	0	0	305	395
361. 2	5.8	5.8	5.7	-0.01	-0.11	-0.12	D	-11.0	29	0.00	0	0	315	395
361. 3	5.5	5.5	5.3	-0.03	-0.15	-0.15	D	-10.3	32	0.00	0	0	313	393
361. 4	4.7	4.7	4.5	-0.03	-0.16	-0.16	D	-10.5	33	0.00	0	0	307	389
361. 5	4.3	4.3	4.1	-0.03	-0.16	-0.16	D	-10.3	34	0.00	0	0	308	387
361. 6	4.1	4.0	3.9	-0.05	-0.18	-0.17	D	-10.0	35	0.00	0	0	312	386
361. 7	4.0	4.0	3.8	-0.05	-0.18	-0.17	D	-10.3	34	0.00	0	0	313	386
361. 8	4.0	3.9	3.7	-0.08	-0.26	-0.20	D	-10.6	33	0.00	9	1	316	388
361. 9	4.2	4.0	3.7	-0.16	-0.40	-0.26	D	-10.3	34	0.00	54	9	367	393
361.10	4.5	4.2	3.9	-0.26	-0.56	-0.33	C	-10.3	33	0.00	101	20	317	400
361.11	999.9	999.9	999.9	99.99	99.99	99.99		999.9	9999	99.99	9999	9999	9999	9999
361.12	999.9	999.9	999.9	99.99	99.99	99.99		999.9	9999	99.99	9999	9999	9999	9999
361.13	6.0	5.6	5.2	-0.35	-0.73	-0.40	A	-10.2	30	0.00	161	33	331	347
361.14	6.4	6.1	5.7	-0.34	-0.74	-0.42	A	-10.2	29	0.01	150	31	333	349
361.15	6.5	6.2	5.8	-0.28	-0.62	-0.36	B	-10.1	29	0.00	108	21	336	345
361.16	6.6	6.4	6.1	-0.23	-0.51	-0.31	C	-10.0	30	0.00	63	12	332	342
361.17	6.2	6.1	5.9	-0.09	-0.29	-0.22	D	-9.8	31	0.00	11	2	316	333
361.18	5.9	5.9	5.7	-0.03	-0.18	-0.17	D	-9.4	32	0.00	0	0	320	329
361.19	5.9	5.8	5.6	-0.05	-0.21	-0.19	D	-8.6	34	0.00	0	0	328	330
361.20	5.8	5.8	5.6	-0.06	-0.23	-0.19	D	-7.1	39	0.00	0	0	330	330
361.21	5.9	5.9	5.8	-0.03	-0.17	-0.16	D	-6.6	40	0.00	0	0	325	329
361.22	5.9	6.0	6.0	0.10	0.13	0.00	E	-6.9	40	0.00	0	0	302	325
361.23	5.3	5.5	5.8	0.23	0.55	0.29	E	-7.0	42	0.00	0	0	281	318

********** DAILY SUMMARIES **********

3 METER TEMP *** AVG = 5.5 MAX = 6.8 MIN = 4.0 AVG DEW POINT = -9.7 TOTAL PRCP = 0.01

10 METER WINDS ** AVG SPEED = 3.9 AVG DIR = 146 PEAK SPEED = 10.0 , OCCURRED DURING HOUR 0

NUMBER OF HOURS PER STABILITY CLASS A = 2 , B = 1, C = 2, D = 13, E = 4, F = 0, G = 0

WIPP METEOROLOGICAL DATA DAILY SUMMARY FOR 12/28/77

JULIAN DAY.HR	3 METER WIND DIR	SPD	PEAK SPD	TURB INT	10 METER WIND DIR	SPD	PEAK SPD	TURB INT	30 METER WIND DIR	SPD	PEAK SPD	TURB INT	BAROM PRESS
362.0	140	1.8	3.5	0.33	141	2.7	4.7	0.22	141	5.4	6.8	0.14	895.0
362.1	87	0.4	1.9	1.81	113	0.9	2.3	1.01	135	2.4	3.5	0.36	895.1
362.2	69	1.3	2.1	0.37	99	1.7	3.2	0.47	138	1.3	2.3	0.36	894.8
362.3	45	1.7	3.2	0.28	47	2.5	5.0	0.32	20	2.3	6.5	0.24	895.4
362.4	53	1.7	3.5	0.34	48	3.0	5.3	0.27	31	4.4	6.8	0.09	895.3
362.5	73	0.8	2.1	0.68	69	1.9	3.5	0.33	38	2.5	4.0	0.20	895.4
362.6	270	1.2	3.0	0.45	263	2.2	4.5	0.38	265	2.8	5.2	0.36	896.3
362.7	309	1.0	2.1	0.46	305	1.7	2.9	0.31	301	3.2	4.5	0.17	897.5
362.8	348	1.8	4.0	0.23	341	2.5	5.0	0.20	335	3.8	5.9	0.19	899.0
362.9	21	2.9	4.3	0.16	14	3.5	5.3	0.16	11	4.3	6.8	0.17	899.3
362.10	33	2.3	5.1	0.29	29	2.8	5.3	0.27	27	3.1	6.1	0.20	899.7
362.11	30	2.8	5.0	0.38	26	3.2	5.5	0.36	26	3.5	5.9	0.35	899.3
362.12	29	2.3	4.3	0.36	25	2.6	4.7	0.34	24	3.0	4.8	0.31	898.2
362.13	24	1.7	3.6	0.46	20	1.9	3.9	0.42	21	2.1	3.8	0.38	896.3
362.14	23	1.3	3.0	0.37	19	1.5	3.5	0.51	20	1.7	3.7	0.48	895.8
362.15	58	1.3	3.0	0.52	47	1.5	3.2	0.49	46	1.7	3.5	0.44	895.3
362.16	72	0.7	2.1	0.57	70	0.8	2.1	0.52	69	1.0	2.3	0.46	894.7
362.17	328	1.3	4.0	0.60	323	1.7	4.5	0.53	322	2.1	5.8	0.51	895.8
362.18	317	1.6	3.7	0.41	314	2.2	4.6	0.36	311	2.9	5.7	0.34	895.7
362.19	345	0.8	2.6	0.78	341	1.3	3.6	0.57	344	2.2	5.0	0.50	896.0
362.20	356	0.8	2.5	0.67	343	1.7	3.2	0.36	335	2.9	4.8	0.24	896.1
362.21	121	0.8	1.9	0.56	143	1.2	3.1	0.27	148	0.5	3.2	0.57	895.7
362.22	141	0.9	2.2	0.45	153	2.3	4.6	0.28	174	3.8	5.7	0.23	895.6
362.23	139	0.8	2.1	0.50	164	1.8	3.2	0.16	196	2.0	3.0	0.24	895.5

JULIAN DAY.HR	TEMPERATURES 3 M	10 M	30 M	DELTA TEMPS 10-3	30-3	30-10	STAB CLASS	DEW POINT	REL HUM	PRCP	RADIATION PARAMETERS SW SKY	SW REF	LW SKY	LW REF
362.0	4.6	4.8	5.5	0.28	0.93	0.63	F	-6.9	43	0.00	0	0	273	313
362.1	3.7	4.5	5.4	0.86	1.72	0.84	G	-7.6	48	0.00	0	0	263	304
362.2	1.7	5.4	6.1	3.66	4.44	0.75	F	-7.0	50	0.00	0	0	262	298
362.3	2.3	5.1	7.0	2.72	4.65	1.91	G	-6.5	52	0.00	0	0	267	301
362.4	2.7	3.6	5.9	0.86	3.13	2.25	G	-5.8	53	0.00	0	0	273	303
362.5	2.8	4.7	6.5	1.80	3.66	1.84	G	-5.4	59	0.00	0	0	272	302
362.6	1.2	2.3	4.1	1.10	2.92	1.79	G	-6.9	53	0.00	0	0	272	297
362.7	1.3	1.5	2.0	0.20	0.70	0.48	F	-7.7	51	0.00	0	0	286	302
362.8	2.2	2.2	2.2	-0.01	0.06	0.05	E	-7.8	45	0.00	31	6	295	310
362.9	3.6	3.5	3.4	-0.11	-0.23	-0.14	D	-6.6	45	0.00	73	14	297	320
362.10	4.9	4.6	4.4	-0.27	-0.54	-0.29	D	-7.7	36	0.00	251	58	301	341
362.11	6.6	6.2	5.9	-0.39	-0.71	-0.35	B	-8.1	34	0.00	312	69	309	363
362.12	7.3	6.9	6.6	-0.38	-0.67	-0.31	C	-7.4	32	0.00	392	90	294	372
362.13	8.3	7.9	7.6	-0.35	-0.69	-0.36	B	-7.3	31	0.00	397	89	298	385
362.14	9.1	8.8	8.5	-0.30	-0.59	-0.31	C	-6.4	31	0.00	318	69	313	387
362.15	9.8	9.5	9.3	-0.30	-0.56	-0.28	D	-7.0	29	0.00	283	63	301	384
362.16	10.1	10.0	9.7	-0.10	-0.33	-0.25	D	-5.3	34	0.00	33	5	335	362
362.17	9.7	9.7	9.6	0.00	-0.11	-0.14	D	-3.5	42	0.00	16	3	323	349
362.18	8.4	8.4	8.4	0.04	-0.04	-0.10	E	-3.2	45	0.00	0	0	331	339
362.19	6.3	6.5	6.6	0.21	0.32	0.09	E	-0.9	64	0.00	0	0	300	326
362.20	4.1	5.2	5.7	1.08	1.58	0.47	F	-1.9	71	0.00	0	0	265	311
362.21	2.4	3.8	4.6	1.46	2.29	0.81	G	-2.0	77	0.00	0	0	255	302
362.22	1.6	2.6	3.7	0.99	2.13	1.14	G	-1.8	78	0.00	0	0	285	298
362.23	0.7	2.1	2.7	1.36	2.05	0.66	F	-2.2	81	0.00	0	0	284	292

DAILY SUMMARIES

3 METER TEMP --- AVG = 4.8 MAX = 10.1 MIN = 0.7 AVG DEW POINT = -5.5 TOTAL PRCP = 0.00

10 METER WINDS -- AVG SPEED = 1.0 AVG DIR = 29 PEAK SPEED = 5.5 , OCCURRED DURING HOUR 11

NUMBER OF HOURS FOR STABILITY CLASS A = 0 , B = 2, C = 2, D = 5, E = 3, F = 5, G = 7

WIPP METEOROLOGICAL DATA DAILY SUMMARY FOR 12/29/77

JULIAN DAY.HR	3 METER WIND DIR	SPD	PEAK SPD	TURB INT	10 METER WIND DIR	SPD	PEAK SPD	TURB INT	30 METER WIND DIR	SPD	PEAK SPD	TURB INT	BAROM PRESS
363. 0	68	0.8	1.5	0.46	165	0.2	1.1	0.69	275	1.1	1.9	0.43	894.9
363. 1	73	0.7	1.3	0.33	42	0.3	0.9	0.71	303	1.2	2.1	0.24	894.2
363. 2	62	1.1	1.8	0.29	67	0.9	1.7	0.41	3	0.5	1.4	0.66	894.2
363. 3	73	1.1	1.8	0.42	75	1.0	2.5	0.42	87	0.3	1.3	1.01	894.2
363. 4	75	1.1	2.4	0.54	98	1.0	3.4	0.50	133	0.9	2.0	0.66	893.7
363. 5	93	1.0	2.0	0.57	132	1.0	3.5	0.46	162	1.0	3.5	0.35	893.6
363. 6	116	0.9	3.3	1.36	155	1.7	4.3	0.74	165	2.5	4.2	0.24	893.9
363. 7	70	1.0	2.0	0.41	110	0.9	2.2	1.10	184	0.8	2.0	0.34	894.0
363. 8	129	0.6	2.5	1.21	153	1.3	3.3	0.50	190	1.8	3.3	0.22	894.3
363. 9	183	0.8	2.3	1.07	179	1.0	2.7	0.96	191	1.4	3.2	0.62	894.6
363.10	233	1.7	3.5	0.30	231	2.0	3.7	0.27	232	2.1	3.7	0.23	894.9
363.11	254	2.6	5.0	0.33	252	3.1	5.6	0.29	253	3.3	5.9	0.24	894.2
363.12	264	4.2	6.4	0.27	262	5.3	7.5	0.23	262	5.7	7.6	0.19	892.7
363.13	273	4.3	8.0	0.23	271	5.3	9.9	0.22	270	5.8	10.0	0.19	891.6
363.14	278	6.6	9.1	0.17	276	8.5	11.6	0.15	275	9.4	12.0	0.12	891.6
363.15	269	6.8	9.4	0.18	267	8.9	12.0	0.16	267	10.0	13.0	0.14	891.7
363.16	268	6.6	9.2	0.13	266	8.6	11.9	0.12	265	9.6	12.6	0.10	891.6
363.17	265	5.6	8.2	0.14	262	7.6	10.6	0.12	263	8.8	11.6	0.10	891.6
363.18	257	4.6	7.0	0.10	255	6.3	8.8	0.08	257	7.6	10.5	0.05	891.8
363.19	240	2.4	4.1	0.19	240	3.9	5.5	0.16	244	6.0	7.5	0.11	892.1
363.20	243	1.8	3.1	0.18	244	3.3	4.6	0.15	254	5.2	7.2	0.14	892.7
363.21	254	2.4	5.3	0.11	251	4.5	7.2	0.08	255	6.5	8.3	0.05	892.9
363.22	223	2.0	4.6	0.34	225	3.5	6.2	0.27	240	5.1	7.9	0.14	893.1
363.23	126	0.0	1.8	6.28	265	0.9	2.2	0.59	273	1.9	3.4	0.24	893.2

JULIAN DAY.HR	TEMPERATURES 3 M	10 M	30 M	DELTA TEMPS 10-3	30-3	30-10	STAB CLASS	DEW POINT	REL HUM	PRCP	RADIATION PARAMETERS SW SKY	SW REF	LW SKY	LW REF
363. 0	-0.5	2.0	2.8	2.40	3.28	0.85	G	-4.0	79	0.00	0	0	288	284
363. 1	-1.1	2.4	3.6	3.43	4.66	1.20	G	-4.6	75	0.00	0	0	250	287
363. 2	-2.1	2.2	3.1	4.31	5.17	0.83	G	-5.1	80	0.00	0	0	242	283
363. 3	-1.9	2.4	3.2	4.27	5.14	0.84	G	-5.1	80	0.00	0	0	243	282
363. 4	-1.7	1.7	3.3	3.37	5.05	1.66	G	-4.6	81	0.00	0	0	245	282
363. 5	-1.0	2.0	3.0	2.97	4.02	1.02	G	-4.0	81	0.00	0	0	246	284
363. 6	-0.6	1.5	3.0	2.11	3.64	1.51	G	-4.1	81	0.00	0	0	249	286
363. 7	-1.7	1.9	2.8	3.68	4.59	0.89	G	-3.9	81	0.00	0	0	250	283
363. 8	0.5	1.9	3.2	1.40	2.77	1.34	G	0.7	85	0.00	69	16	264	296
363. 9	5.3	5.2	5.3	-0.06	0.10	0.14	E	3.2	76	0.00	212	49	261	330
363.10	8.4	8.2	8.0	-0.20	-0.43	-0.26	D	3.4	64	0.00	394	91	270	364
363.11	11.8	11.5	11.1	-0.29	-0.65	-0.38	B	4.1	53	0.00	528	123	282	397
363.12	15.0	14.5	13.9	-0.51	-1.00	-0.51	A	3.7	45	0.00	588	138	293	410
363.13	16.9	16.4	15.8	-0.51	-1.04	-0.56	A	2.5	36	0.00	560	137	302	431
363.14	17.9	17.3	16.7	-0.57	-1.16	-0.61	A	3.2	38	0.00	516	122	302	425
363.15	17.9	17.4	16.9	-0.48	-0.99	-0.54	A	3.0	37	0.00	380	93	302	413
363.16	17.1	16.9	16.6	-0.18	-0.46	-0.30	C	3.1	41	0.00	154	36	297	392
363.17	15.9	16.0	15.9	0.07	0.03	-0.07	E	4.2	47	0.00	22	4	315	377
363.18	14.4	14.6	14.7	0.21	0.35	0.12	E	3.2	52	0.00	0	0	303	364
363.19	11.8	12.4	13.1	0.55	1.28	0.73	F	3.4	56	0.00	0	0	279	346
363.20	10.3	11.1	12.3	0.86	2.01	1.12	G	2.6	64	0.00	0	0	278	337
363.21	9.5	10.9	12.2	1.36	2.71	1.32	G	3.5	60	0.00	0	0	295	332
363.22	9.4	10.1	11.0	0.70	1.68	0.95	G	1.8	68	0.00	0	0	293	331
363.23	8.7	10.4	10.9	1.65	2.23	0.56	F	2.1	61	0.00	0	0	277	347

DAILY SUMMARIES

3 METER TEMP --- AVG = 7.5 MAX = 17.9 MIN = -2.1 AVG DEW POINT = 0.5 TOTAL PRCP = 0.00

10 METER WINDS -- AVG SPEED = 2.7 AVG DIR = 255 PEAK SPEED = 12.0 , OCCURRED DURING HOUR 15

NUMBER OF HOURS PER STABILITY CLASS A = 4 , B = 1, C = 1, D = 1, E = 3, F = 2, G = 12

WIPP METEOROLOGICAL DATA DAILY SUMMARY FOR 12/30/77

JULIAN DAY.HR	3 METER WIND DIR	SPD	PEAK SPD	TURB INT	10 METER WIND DIR	SPD	PEAK SPD	TURB INT	30 METER WIND DIR	SPD	PEAK SPD	TURB INT	BAROM PRESS
364.0	78	1.0	2.3	0.61	58	0.4	3.6	2.19	308	0.5	2.5	1.17	893.2
364.1	58	1.6	2.5	0.16	27	1.3	3.0	0.34	330	1.0	1.6	0.33	893.2
364.2	15	0.8	2.3	0.58	327	1.7	2.7	0.33	306	1.9	3.5	0.27	893.2
364.3	351	0.8	1.6	0.41	306	1.6	2.5	0.21	294	1.4	2.1	0.18	893.5
364.4	53	0.6	1.5	0.51	296	0.8	1.6	0.49	287	1.3	2.1	0.38	893.2
364.5	58	0.9	2.0	0.23	261	0.0	0.8	4.82	294	1.0	1.6	0.31	892.9
364.6	48	1.4	2.7	0.35	355	1.4	3.7	0.58	339	2.2	3.9	0.31	893.1
364.7	59	1.8	2.5	0.13	53	3.6	4.3	0.07	19	3.7	4.3	0.10	893.1
364.8	58	1.2	2.5	0.44	45	2.9	4.7	0.22	22	4.2	6.0	0.11	893.8
364.9	355	0.8	2.2	0.99	354	1.2	2.7	0.87	341	1.8	3.0	0.53	894.5
364.10	255	1.7	2.9	0.48	253	2.1	3.5	0.47	254	2.3	3.4	0.40	894.9
364.11	204	1.5	2.8	0.45	204	1.8	3.1	0.30	208	1.9	3.0	0.27	894.6
364.12	255	1.6	4.0	0.61	253	1.9	4.6	0.55	252	2.1	4.9	0.50	893.5
364.13	267	3.7	7.1	0.28	265	4.6	8.4	0.26	265	4.9	8.3	0.22	892.3
364.14	250	4.3	8.4	0.43	248	5.5	10.1	0.41	250	5.9	10.9	0.35	891.6
364.15	270	7.3	11.1	0.18	267	9.5	13.5	0.16	266	10.7	14.2	0.13	891.6
364.16	264	7.3	10.2	0.16	261	9.5	13.3	0.15	262	10.9	13.9	0.14	891.5
364.17	257	5.4	8.5	0.15	255	7.2	10.2	0.14	255	8.4	11.9	0.12	891.4
364.18	260	3.5	5.0	0.15	258	5.0	7.0	0.14	260	6.6	8.7	0.11	892.0
364.19	258	2.3	3.9	0.12	258	3.9	5.3	0.08	261	6.2	7.1	0.06	892.7
364.20	262	1.5	2.1	0.16	260	3.6	4.3	0.06	263	6.0	6.7	0.04	893.1
364.21	264	1.0	2.5	0.37	261	3.0	4.8	0.23	263	5.1	6.6	0.16	893.1
364.22	214	1.0	2.2	0.27	235	2.8	3.7	0.21	247	5.2	6.6	0.12	893.3
364.23	140	0.5	3.1	1.14	224	1.3	4.1	0.57	252	3.4	5.4	0.24	893.1

JULIAN DAY.HR	TEMPERATURES 3 M	10 M	30 M	DELTA TEMPS 10-3	30-3	30-10	STAB CLASS	DEW POINT	REL HUM	PRCP	RADIATION PARAMETERS SW SKY	SW REF	LW SKY	LW REF
364.0	6.8	10.4	10.8	3.55	3.99	0.42	F	-0.3	73	0.00	0	0	332	312
364.1	3.2	9.9	10.9	6.63	7.71	1.04	G	-1.6	75	0.00	0	0	335	305
364.2	5.9	10.3	10.8	4.35	4.96	0.58	F	0.8	66	0.00	0	0	285	308
364.3	6.8	10.2	10.5	3.34	3.66	0.30	E	0.7	65	0.00	0	0	287	307
364.4	6.1	9.6	10.1	3.44	3.94	0.47	F	-1.8	74	0.00	0	0	283	303
364.5	4.5	9.2	9.8	4.73	5.28	0.55	F	-0.8	66	0.00	0	0	277	302
364.6	2.9	8.4	9.4	5.54	6.57	1.00	G	-2.0	77	0.00	0	0	258	298
364.7	2.0	5.1	8.9	3.10	6.85	3.75	G	-1.4	77	0.00	0	0	251	294
364.8	2.9	4.7	8.0	1.79	5.08	3.27	G	0.4	78	0.00	40	8	256	304
364.9	8.0	8.1	8.6	0.11	0.65	0.52	F	2.9	62	0.00	209	51	269	341
364.10	10.7	10.5	10.3	-0.16	-0.40	-0.26	D	3.0	57	0.00	410	98	277	375
364.11	11.9	11.6	11.4	-0.23	-0.47	-0.26	D	2.5	51	0.00	347	76	288	367
364.12	14.1	13.8	13.4	-0.27	-0.59	-0.34	C	2.1	41	0.00	541	127	304	416
364.13	15.9	15.3	14.8	-0.52	-1.00	-0.51	A	1.4	36	0.00	584	138	301	428
364.14	17.4	16.7	16.2	-0.60	-1.13	-0.54	A	0.2	30	0.00	516	127	300	428
364.15	17.7	17.2	16.7	-0.48	-1.01	-0.55	A	-1.1	28	0.00	396	99	293	411
364.16	17.1	16.8	16.4	-0.29	-0.67	-0.41	A	-0.3	32	0.00	222	56	290	394
364.17	15.6	15.6	15.5	0.04	-0.03	-0.09	E	0.3	39	0.00	47	11	303	373
364.18	13.1	13.4	13.8	0.36	0.75	0.36	F	0.3	42	0.00	0	0	275	355
364.19	11.2	11.8	12.8	0.65	1.61	0.94	G	0.0	51	0.00	0	0	270	342
364.20	8.5	10.0	11.6	1.65	3.13	1.66	G	-0.4	57	0.00	0	0	266	327
364.21	8.0	9.5	11.0	1.49	3.08	1.56	G	-0.1	57	0.00	0	0	265	320
364.22	6.9	8.7	10.4	1.75	3.45	1.67	G	-0.2	61	0.00	0	0	261	313
364.23	6.9	8.5	9.9	1.57	2.98	1.38	G	0.2	64	0.00	0	0	258	309

********** DAILY SUMMARIES **********

3 METER TEMP *** AVG = 9.3 MAX = 17.7 MIN = 2.0 AVG DEW POINT = 0.2 TOTAL PRCP = 0.00

10 METER WINDS ** AVG SPEED = 2.3 AVG DIR = 266 PEAK SPEED = 13.5 , OCCURRED DURING HOUR 15

NUMBER OF HOURS PER STABILITY CLASS A = 4, B = 0, C = 1, D = 2, E = 2, F = 6, G = 9

WIPP METEOROLOGICAL DATA DAILY SUMMARY FOR 12/31/77

JULIAN DAY.HR	3 METER WIND DIR	SPD	PEAK SPD	TURB INT	10 METER WIND DIR	SPD	PEAK SPD	TURB INT	30 METER WIND DIR	SPD	PEAK SPD	TURB INT	BAROM PRESS
365.0	114	0.8	2.4	0.56	158	2.1	3.3	0.24	191	2.5	3.3	0.22	893.2
365.1	146	1.6	2.2	0.11	166	3.3	4.4	0.09	196	3.6	4.8	0.14	893.1
365.2	150	1.7	2.5	0.18	168	3.4	4.8	0.14	204	3.7	4.8	0.18	892.8
365.3	172	0.5	1.9	1.10	184	2.1	3.6	0.51	225	3.3	5.9	0.32	892.7
365.4	165	1.1	4.1	0.39	183	2.7	6.4	0.18	208	4.5	8.8	0.20	892.4
365.5	202	2.0	4.9	0.29	195	3.5	7.4	0.17	198	5.8	8.6	0.18	892.0
365.6	188	1.9	3.0	0.19	187	3.5	4.9	0.11	201	3.5	7.2	0.13	892.2
365.7	152	0.5	2.9	1.51	187	1.6	4.3	0.26	217	3.3	5.7	0.48	893.4
365.8	342	1.8	2.5	0.31	320	3.6	4.6	0.24	302	5.0	6.1	0.18	894.2
365.9	195	0.1	2.8	6.03	288	0.7	3.2	2.54	282	2.3	4.8	0.86	894.5
365.10	172	0.4	2.2	1.40	171	0.6	2.6	1.87	195	0.8	2.7	1.39	895.0
365.11	269	2.2	3.4	0.39	267	2.7	4.3	0.35	267	2.9	4.1	0.30	894.9
365.12	233	2.4	4.9	0.50	231	2.9	5.7	0.45	235	3.0	6.4	0.41	894.5
365.13	245	2.7	5.3	0.38	242	3.3	6.2	0.33	242	3.5	6.2	0.31	893.8
365.14	211	2.3	4.2	0.27	209	2.8	4.9	0.25	211	2.9	4.5	0.23	893.3
365.15	191	2.5	3.9	0.29	189	3.0	4.0	0.25	190	3.1	4.2	0.23	893.1
365.16	195	1.9	3.6	0.31	194	2.4	3.9	0.29	198	2.5	3.9	0.26	893.5
365.17	154	0.8	2.7	1.11	166	1.2	3.5	0.82	167	1.6	3.5	0.62	893.5
365.18	86	1.8	2.5	0.21	91	3.4	4.5	0.19	104	3.6	4.6	0.17	894.0
365.19	89	2.0	2.8	0.18	87	4.2	5.1	0.13	97	4.1	5.0	0.16	894.9
365.20	95	1.7	2.8	0.32	94	3.2	4.7	0.25	102	4.3	5.3	0.22	895.5
365.21	102	1.7	2.6	0.19	105	2.7	4.1	0.13	120	4.5	5.8	0.05	895.7
365.22	81	3.0	10.8	0.52	83	4.1	12.8	0.58	94	5.3	13.6	0.65	896.8
365.23	66	8.5	11.3	0.09	62	10.9	13.9	0.07	64	12.0	14.8	0.07	897.6

JULIAN DAY.HR	TEMPERATURES 3 M	10 M	30 M	DELTA TEMPS 10-3	30-3	30-10	STAB CLASS	DEW POINT	REL HUM	PRCP	RADIATION PARAMETERS SW SKY	SW REF	LW SKY	LW REF
365.0	4.7	8.0	9.0	3.33	4.37	1.02	G	-0.7	64	0.00	0	0	255	302
365.1	4.4	7.6	8.6	3.17	4.25	1.05	G	-1.3	69	0.00	0	0	252	302
365.2	4.3	6.9	8.7	2.60	4.43	1.80	G	-1.2	66	0.00	0	0	253	302
365.3	4.3	6.7	9.0	2.32	4.71	2.37	G	-1.7	68	0.00	0	0	258	299
365.4	3.7	5.5	8.3	1.80	4.61	2.79	G	-0.6	69	0.00	0	0	251	297
365.5	5.5	6.2	7.5	0.71	2.03	1.30	G	-0.1	68	0.00	0	0	250	306
365.6	5.6	6.6	8.6	1.07	3.06	1.97	G	0.0	64	0.00	0	0	253	306
365.7	5.5	6.9	8.7	1.47	3.29	1.80	G	-1.4	69	0.00	0	0	256	302
365.8	6.3	8.5	10.2	2.13	3.84	1.69	G	0.1	61	0.00	31	6	269	314
365.9	8.0	8.7	9.7	0.69	1.78	1.06	G	1.1	59	0.00	110	23	283	332
365.10	10.5	10.4	10.3	-0.10	-0.18	-0.10	E	1.3	47	0.00	218	49	303	360
365.11	13.2	13.0	12.7	-0.18	-0.42	-0.26	D	1.1	41	0.00	354	82	297	364
365.12	15.0	14.6	14.1	-0.41	-0.82	-0.45	A	0.8	37	0.00	623	149	296	484
365.13	16.4	16.0	15.6	-0.38	-0.76	-0.40	A	-0.4	32	0.00	507	117	318	432
365.14	16.2	15.9	15.7	-0.24	-0.49	-0.27	D	-0.6	32	0.00	182	38	324	400
365.15	16.0	15.8	15.6	-0.19	-0.43	-0.25	D	-0.6	31	0.00	170	38	326	394
365.16	16.7	16.5	16.3	-0.17	-0.40	-0.25	D	-0.7	31	0.00	164	37	323	394
365.17	15.4	16.1	16.1	0.64	0.71	0.04	E	-1.3	36	0.00	18	2	323	372
365.18	12.9	14.2	15.5	1.26	2.57	1.29	G	-1.5	39	0.00	0	0	310	358
365.19	11.9	13.1	15.4	1.21	3.55	2.30	G	-1.3	39	0.00	0	0	303	345
365.20	11.5	12.5	14.8	0.97	3.29	2.31	G	-1.1	40	0.00	0	0	316	345
365.21	11.8	12.5	14.2	0.62	2.41	1.77	G	-0.6	42	0.00	0	0	328	349
365.22	11.4	11.7	12.7	0.27	1.26	0.97	G	-4.0	44	0.00	0	0	330	340
365.23	5.8	5.7	5.5	-0.06	-0.22	-0.16	D	-4.1	52	0.00	0	0	307	387

********** DAILY SUMMARIES **********

3 METER TEMP --- AVG = 9.9 MAX = 16.7 MIN = 3.7 AVG DEW POINT = -0.8 TOTAL PRCP = 0.00

10 METER WINDS -- AVG SPEED = 1.3 AVG DIR = 156 PEAK SPEED = 13.9 , OCCURRED DURING HOUR 23

NUMBER OF HOURS PER STABILITY CLASS A = 2 , B = 0, C = 0, D = 5, E = 2, F = 0, G = 15

WIPP METEOROLOGICAL DATA DAILY SUMMARY FOR 1/ 1/78

JULIAN DAY.HR	3 METER WIND DIR	SPD	PEAK SPD	TURB INT	10 METER WIND DIR	SPD	PEAK SPD	TURB INT	30 METER WIND DIR	SPD	PEAK SPD	TURB INT	BAROM PRESS
1. 0	67	8.4	11.7	0.09	64	10.8	14.7	0.08	66	12.0	15.6	0.06	897.5
1. 1	67	8.9	13.1	0.09	63	11.5	16.0	0.07	65	12.8	16.4	0.06	897.5
1. 2	61	7.9	11.9	0.12	57	10.2	15.3	0.13	60	11.3	15.5	0.10	900.1
1. 3	47	3.9	7.3	0.16	44	5.1	8.9	0.15	44	5.8	9.8	0.15	901.6
1. 4	48	4.0	5.9	0.16	43	5.3	7.8	0.17	44	6.2	8.0	0.16	901.7
1. 5	55	4.2	6.1	0.11	50	5.4	7.7	0.10	51	6.0	8.7	0.09	902.1
1. 6	56	4.2	6.3	0.12	51	5.5	7.5	0.10	52	6.2	8.5	0.10	902.7
1. 7	64	4.7	6.8	0.16	58	6.1	8.3	0.13	59	6.9	8.4	0.13	904.1
1. 8	74	4.9	6.6	0.14	68	6.4	8.7	0.12	70	7.0	9.3	0.11	904.5
1. 9	75	5.0	7.1	0.15	70	6.4	8.5	0.12	72	6.9	8.9	0.10	905.3
1.10	79	4.4	6.1	0.20	74	5.6	7.5	0.18	76	6.0	7.9	0.16	905.7
1.11	88	4.2	6.0	0.16	82	5.4	7.4	0.14	84	5.6	7.0	0.11	904.9
1.12	91	2.9	4.6	0.25	85	3.7	6.1	0.25	86	4.0	6.0	0.21	904.3
1.13	79	2.8	4.5	0.24	74	3.5	5.2	0.23	76	3.6	4.9	0.20	903.1
1.14	65	2.8	4.7	0.24	59	3.4	5.3	0.22	60	3.5	5.1	0.21	903.0
1.15	88	2.3	4.2	0.32	84	2.9	5.1	0.29	87	3.2	5.1	0.25	903.0
1.16	75	2.2	4.0	0.32	74	2.7	4.8	0.29	74	2.8	4.9	0.28	903.1
1.17	59	2.4	3.6	0.19	57	2.9	4.5	0.15	58	3.1	4.4	0.15	903.3
1.18	68	2.3	3.4	0.15	65	3.2	4.2	0.13	67	3.6	4.4	0.12	903.7
1.19	82	1.6	2.3	0.18	78	2.8	3.6	0.13	81	3.7	4.5	0.12	904.3
1.20	98	1.7	2.2	0.12	96	3.1	3.7	0.12	97	4.7	5.2	0.04	904.8
1.21	91	1.8	2.7	0.15	90	3.0	3.8	0.13	96	4.6	5.6	0.05	905.0
1.22	99	2.2	3.8	0.10	97	3.3	5.5	0.11	98	4.3	5.9	0.07	905.2
1.23	96	2.4	3.8	0.10	95	3.7	5.4	0.11	99	5.1	6.1	0.06	905.2

JULIAN DAY.HR	TEMPERATURES 3 M	10 M	30 M	DELTA TEMPS 10-3	30-3	30-10	STAB CLASS	DEW POINT	REL HUM	PRCP	RADIATION PARAMETERS SW SKY	SW REF	LW SKY	LW REF
1. 0	4.1	4.1	3.9	-0.06	-0.22	-0.18	D	-4.4	56	0.00	0	0	299	319
1. 1	3.0	2.9	2.8	-0.06	-0.21	-0.17	D	-4.8	58	0.00	0	0	290	313
1. 2	1.7	1.6	1.5	-0.07	-0.24	-0.19	D	-6.4	57	0.00	0	0	286	307
1. 3	0.6	0.6	0.4	-0.03	-0.16	-0.15	D	-7.6	55	0.00	0	6	266	300
1. 4	-0.5	-0.6	-0.7	-0.01	-0.12	-0.13	D	-10.4	48	0.00	0	0	251	293
1. 5	-0.9	-1.0	-1.2	-0.07	-0.24	-0.19	D	-11.0	47	0.00	0	0	280	295
1. 6	-1.7	-1.7	-1.9	-0.06	-0.22	-0.18	D	-12.4	46	0.00	0	0	263	291
1. 7	-2.5	-2.5	-2.7	-0.06	-0.21	-0.17	D	-13.6	43	0.00	0	0	258	287
1. 8	-2.8	-3.0	-3.2	-0.17	-0.39	-0.24	D	-14.2	42	0.00	18	3	281	290
1. 9	-2.8	-3.1	-3.4	-0.27	-0.57	-0.32	C	-13.9	42	0.00	82	16	282	295
1.10	-2.8	-3.2	-3.6	-0.40	-0.74	-0.36	B	-13.7	41	0.00	130	27	283	300
1.11	-2.3	-2.9	-3.4	-0.61	-1.03	-0.44	A	-13.0	43	0.00	226	49	280	309
1.12	-2.0	-2.5	-2.9	-0.53	-0.90	-0.39	A	-13.4	42	0.00	171	35	283	312
1.13	-2.2	-2.6	-2.9	-0.39	-0.70	-0.32	C	-13.4	42	0.00	105	20	290	308
1.14	-2.3	-2.6	-3.0	-0.36	-0.68	-0.34	B	-12.2	47	0.00	153	31	293	311
1.15	-2.2	-2.6	-2.9	-0.43	-0.75	-0.34	C	-12.0	46	0.00	192	40	281	312
1.16	-2.0	-2.3	-2.6	-0.33	-0.61	-0.31	C	-13.0	43	0.00	74	14	284	305
1.17	-2.2	-2.4	-2.6	-0.21	-0.44	-0.25	D	-13.6	42	0.00	16	2	278	298
1.18	-2.8	-2.9	-3.0	-0.04	-0.14	-0.12	D	-14.7	41	0.00	0	0	238	285
1.19	-4.4	-3.8	-3.5	0.53	0.87	0.32	F	-15.5	43	0.00	0	0	213	273
1.20	-5.2	-4.8	-4.2	0.33	1.02	0.66	F	-15.6	45	0.00	0	0	215	270
1.21	-5.3	-5.2	-4.8	0.08	0.51	0.41	F	-15.1	46	0.00	0	0	226	270
1.22	-4.4	-4.5	-4.5	-0.07	-0.06	-0.02	E	-14.4	45	0.00	0	0	237	275
1.23	-4.9	-4.9	-4.8	-0.06	0.12	0.16	E	-14.6	48	0.00	0	0	215	269

DAILY SUMMARIES

3 METER TEMP -- AVG = -2.0 MAX = 4.1 MIN = -5.3 AVG DEW POINT = -12.2 TOTAL PRCP = 0.00

10 METER WINDS -- AVG SPEED = 4.9 AVG DIR = 67 PEAK SPEED = 16.0 , OCCURRED DURING HOUR 1

NUMBER OF HOURS PER STABILITY CLASS A = 2 , B = 2, C = 4, D = 11, E = 2, F = 3, G = 0

WIPP METEOROLOGICAL DATA DAILY SUMMARY FOR 1/ 2/78

JULIAN DAY.HR	3 METER WIND DIR	SPD	PEAK SPD	TURB INT	10 METER WIND DIR	SPD	PEAK SPD	TURB INT	30 METER WIND DIR	SPD	PEAK SPD	TURB INT	BAROM PRESS
2. 0	87	2.2	3.6	0.13	85	3.3	5.2	0.12	90	4.3	5.5	0.08	905.2
2. 1	99	2.3	4.2	0.13	96	3.3	4.9	0.14	97	4.0	5.3	0.09	905.2
2. 2	69	0.9	2.3	0.43	80	1.5	3.0	0.23	92	2.5	3.9	0.09	905.2
2. 3	50	1.0	1.4	0.20	58	1.2	1.8	0.13	89	1.6	2.1	0.20	905.4
2. 4	49	1.0	1.4	0.11	47	0.9	1.4	0.09	94	1.0	1.6	0.21	905.7
2. 5	81	0.5	1.2	0.50	82	0.9	1.8	0.46	97	1.2	1.8	0.29	905.6
2. 6	94	0.5	1.1	0.60	92	0.5	1.6	0.46	106	0.9	1.5	0.28	905.2
2. 7	151	0.6	1.3	0.19	147	0.9	1.8	0.12	140	1.2	2.1	0.12	905.3
2. 8	147	1.1	2.5	0.20	148	2.5	3.2	0.10	148	2.6	3.4	0.07	905.6
2. 9	189	1.3	3.0	0.51	188	1.6	3.2	0.47	189	1.7	2.8	0.40	905.8
2.10	228	2.1	4.2	0.34	226	2.6	4.9	0.29	228	2.7	4.8	0.24	905.7
2.11	217	2.0	4.1	0.56	215	2.4	4.5	0.47	218	2.5	4.8	0.38	904.8
2.12	213	1.9	4.0	0.49	211	2.3	4.6	0.47	211	2.4	4.6	0.45	903.0
2.13	197	2.3	4.5	0.45	196	2.8	5.5	0.77	200	2.9	5.3	0.35	901.9
2.14	182	1.8	4.5	0.55	179	2.2	4.8	0.50	181	2.2	5.0	0.50	901.0
2.15	192	2.0	4.1	0.44	189	2.4	4.5	0.37	189	2.6	4.8	0.31	900.6
2.16	188	3.0	4.6	0.24	185	3.6	5.2	0.22	186	3.6	5.1	0.21	900.8
2.17	175	3.3	4.9	0.14	173	4.2	5.8	0.12	174	4.5	6.0	0.11	900.8
2.18	167	2.3	3.3	0.13	166	3.5	4.9	0.11	168	4.7	5.4	0.09	900.8
2.19	153	1.6	2.8	0.14	155	3.0	3.8	0.17	160	4.8	5.3	0.06	901.5
2.20	145	1.4	2.2	0.20	145	3.1	3.9	0.14	153	4.8	5.6	0.09	901.6
2.21	155	2.0	3.5	0.18	154	3.4	4.7	0.17	157	5.1	6.2	0.14	901.9
2.22	159	2.1	3.2	0.15	157	3.5	4.5	0.12	160	5.1	6.0	0.08	901.9
2.23	163	2.2	3.1	0.11	161	3.4	4.3	0.10	162	5.1	5.9	0.06	901.6

JULIAN DAY.HR	TEMPERATURES 3 M	10 M	30 M	DELTA TEMPS 10-3	30-3	30-10	STAB CLASS	DEW POINT	REL HUM	PRCP	RADIATION PARAMETERS SW SKY	SW REF	LW SKY	LW REF
2. 0	-4.8	-4.9	-4.9	-0.07	-0.02	0.03	E	-14.0	46	0.00	0	0	249	274
2. 1	-4.6	-4.7	-4.8	-0.15	-0.27	-0.15	D	-14.1	49	0.00	0	0	244	275
2. 2	-5.6	-5.2	-5.2	0.36	0.45	0.07	E	-14.7	52	0.00	0	0	230	269
2. 3	-7.6	-5.8	-5.4	1.72	2.19	0.45	F	-16.0	55	0.00	0	0	211	259
2. 4	-8.0	-5.9	-5.5	2.02	2.48	0.43	F	-14.5	54	0.00	0	0	252	266
2. 5	-5.8	-5.6	-5.6	0.27	0.30	0.01	E	-13.5	53	0.00	0	0	270	275
2. 6	-5.1	-5.1	-5.3	-0.04	-0.20	-0.18	D	-13.2	53	0.00	0	0	271	279
2. 7	-5.3	-5.2	-5.3	0.13	0.04	-0.11	D	-13.7	54	0.00	0	0	239	272
2. 8	-6.0	-5.5	-5.3	0.57	0.73	0.13	E	-12.6	54	0.00	55	13	212	271
2. 9	-3.9	-4.1	-4.2	-0.18	-0.29	-0.13	D	-12.5	48	0.00	228	57	217	294
2.10	-2.5	-2.7	-3.1	-0.26	-0.57	-0.33	C	-11.9	45	0.00	404	98	222	316
2.11	-1.0	-1.3	-1.7	-0.30	-0.67	-0.39	A	-12.2	41	0.00	553	127	228	340
2.12	0.4	0.0	-0.4	-0.38	-0.78	-0.42	A	-11.2	40	0.00	585	139	234	358
2.13	1.8	1.4	0.9	-0.44	-0.88	-0.46	A	-10.3	38	0.00	540	128	238	360
2.14	2.8	2.4	2.0	-0.42	-0.83	-0.43	A	-9.0	40	0.00	491	118	242	362
2.15	4.0	3.6	3.1	-0.42	-0.84	-0.44	A	-8.8	37	0.00	397	96	237	357
2.16	4.4	4.0	3.7	-0.38	-0.74	-0.38	B	-8.7	38	0.00	226	56	235	338
2.17	3.4	3.2	3.0	-0.17	-0.41	-0.26	D	-9.1	43	0.00	51	12	229	318
2.18	1.0	1.3	1.5	0.27	0.53	0.26	E	-10.1	46	0.00	0	0	224	296
2.19	-1.0	-0.5	0.2	0.50	1.21	0.69	F	-11.0	51	0.00	0	0	220	286
2.20	-2.2	-1.5	-0.7	0.69	1.51	0.79	F	-10.4	53	0.00	0	0	218	281
2.21	-2.5	-2.0	-1.6	0.41	0.92	0.49	F	-11.2	53	0.00	0	0	217	279
2.22	-3.2	-2.8	-2.3	0.40	0.90	0.48	F	-11.7	52	0.00	0	0	217	276
2.23	-3.7	-3.3	-3.0	0.31	0.71	0.38	F	-12.3	53	0.00	0	0	216	274

DAILY SUMMARIES

3 METER TEMP --- AVG = -2.3 MAX = 4.4 MIN = -8.0 AVG DEW POINT = -11.9 TOTAL PRCP = 0.00

10 METER WINDS -- AVG SPEED = 1.8 AVG DIR = 160 PEAK SPEED = 5.8 , OCCURRED DURING HOUR 17

NUMBER OF HOURS PER STABILITY CLASS A = 5 , B = 1, C = 1, D = 5, E = 5, F = 7, G = 0

WIPP METEOROLOGICAL DATA DAILY SUMMARY FOR 1/3/78

JULIAN DAY.HR	3 METER WIND DIR	SPD	PEAK SPD	TURB INT	10 METER WIND DIR	SPD	PEAK SPD	TURB INT	30 METER WIND DIR	SPD	PEAK SPD	TURB INT	BAROM PRESS
3. 0	157	1.2	2.1	0.30	155	2.7	3.4	0.24	164	4.4	4.9	0.13	900.9
3. 1	152	0.9	1.5	0.36	148	2.4	3.3	0.17	161	4.0	5.0	0.13	900.5
3. 2	131	0.8	1.6	0.32	140	1.8	3.5	0.11	152	3.8	4.8	0.15	900.1
3. 3	135	1.0	2.1	0.38	136	1.5	2.9	0.22	137	4.0	5.3	0.14	899.5
3. 4	82	0.5	1.4	1.01	129	0.8	2.1	0.76	151	2.3	3.5	0.19	899.0
3. 5	40	1.1	1.6	0.16	42	1.4	1.7	0.10	80	0.7	1.2	0.30	899.0
3. 6	62	1.2	1.9	0.35	57	0.9	2.9	0.76	140	0.7	1.8	0.33	899.5
3. 7	95	0.9	2.3	0.38	109	1.3	3.5	0.15	126	2.6	4.5	0.11	899.2
3. 8	143	0.6	1.6	0.37	139	1.2	2.6	0.18	147	3.7	4.7	0.10	899.5
3. 9	205	1.9	3.0	0.43	202	2.4	3.3	0.39	202	2.5	3.7	0.40	900.2
3.10	223	1.2	2.5	0.54	221	1.4	2.9	0.46	225	1.4	2.8	0.44	900.1
3.11	191	1.7	3.2	0.35	189	2.0	3.8	0.30	189	2.1	3.4	0.24	899.2
3.12	206	2.0	3.7	0.39	204	2.4	4.4	0.32	205	2.5	4.4	0.26	897.9
3.13	206	2.5	4.3	0.34	204	3.0	5.0	0.27	206	3.1	4.8	0.22	896.7
3.14	227	2.4	4.1	0.39	225	3.0	4.6	0.33	225	3.1	4.7	0.29	896.4
3.15	227	2.1	3.8	0.45	226	2.6	4.6	0.37	228	2.8	5.0	0.31	896.1
3.16	241	2.2	4.2	0.35	237	2.7	4.7	0.32	239	2.9	4.7	0.28	896.0
3.17	239	1.2	3.0	0.26	238	1.6	3.5	0.23	238	1.7	3.6	0.21	896.1
3.18	96	0.8	1.5	0.30	154	1.4	3.1	0.28	171	1.7	3.2	0.26	896.2
3.19	121	1.1	2.0	0.29	136	1.5	3.6	0.17	155	4.7	5.9	0.13	896.8
3.20	117	1.6	2.3	0.07	121	0.9	1.8	0.07	140	6.1	7.0	0.09	897.1
3.21	124	1.6	2.3	0.11	125	1.3	3.0	0.09	136	6.1	6.8	0.06	897.3
3.22	139	2.2	3.4	0.13	140	3.7	5.3	0.12	145	6.4	7.4	0.10	897.3
3.23	145	2.8	4.3	0.11	144	4.6	6.0	0.09	146	6.4	8.0	0.07	896.7

JULIAN DAY.HR	TEMPERATURES 3 M	10 M	30 M	DELTA TEMPS 10-3	30-3	30-10	STAB CLASS	DEW POINT	REL HUM	PRCP	RADIATION PARAMETERS SW SKY	SW REF	LW SKY	LW REF
3. 0	-4.6	-4.0	-3.1	0.59	1.48	0.86	G	-12.5	55	0.00	0	0	222	271
3. 1	-4.6	-3.8	-2.8	0.79	1.84	1.03	G	-12.2	55	0.00	0	0	234	271
3. 2	-4.6	-4.0	-3.1	0.62	1.49	0.85	G	-11.0	60	0.00	0	0	236	272
3. 3	-4.2	-3.9	-3.3	0.33	0.94	0.59	F	-10.1	65	0.00	0	0	231	272
3. 4	-4.9	-4.1	-3.4	0.81	1.61	0.77	F	-10.8	65	0.00	0	0	232	268
3. 5	-6.5	-4.0	-3.6	2.49	2.93	0.41	F	-11.9	65	0.00	0	0	234	267
3. 6	-6.2	-3.7	-3.2	2.50	2.96	0.44	F	-10.9	66	0.00	0	0	227	265
3. 7	-5.6	-4.5	-3.4	1.04	2.21	1.14	G	-10.0	71	0.00	0	0	226	265
3. 8	-3.4	-2.7	-1.5	0.61	1.85	1.22	G	-6.8	60	0.00	60	16	230	278
3. 9	1.0	0.8	0.7	-0.17	-0.26	-0.11	D	-5.7	60	0.00	239	68	238	310
3.10	2.3	2.2	1.9	-0.15	-0.40	-0.27	D	-4.2	56	0.00	413	99	245	339
3.11	6.0	5.7	5.4	-0.25	-0.55	-0.32	C	-3.4	46	0.00	543	129	256	371
3.12	9.4	9.1	8.7	-0.35	-0.73	-0.40	A	-1.6	41	0.00	603	144	268	399
3.13	11.9	11.5	11.1	-0.38	-0.84	-0.48	A	-1.0	38	0.00	606	144	273	413
3.14	13.9	13.5	13.0	-0.46	-0.89	-0.44	A	-0.7	35	0.00	554	129	277	417
3.15	15.0	14.6	14.2	-0.38	-0.75	-0.39	A	-0.4	34	0.00	404	98	279	411
3.16	15.6	15.3	15.0	-0.28	-0.63	-0.36	B	-0.8	32	0.00	229	54	279	393
3.17	14.8	14.9	14.7	0.12	-0.03	-0.16	D	-1.8	35	0.00	49	9	272	365
3.18	10.0	13.3	13.9	3.30	3.88	0.58	F	-3.0	43	0.00	0	0	262	389
3.19	7.8	10.0	12.5	2.18	4.75	2.55	G	-2.2	50	0.00	0	0	260	317
3.20	8.3	9.8	11.9	1.17	3.57	2.39	G	-1.5	49	0.00	0	0	276	385
3.21	8.2	8.8	10.5	0.58	2.32	1.71	G	-1.8	51	0.00	0	0	285	388
3.22	7.4	7.9	8.8	0.47	1.38	0.89	G	-1.4	53	0.00	0	0	282	385
3.23	7.4	7.8	8.3	0.40	0.93	0.51	F	-2.0	54	0.00	0	0	268	383

DAILY SUMMARIES

3 METER TEMP --- AVG = 3.9 MAX = 15.6 MIN = -6.5 AVG DEW POINT = -5.3 TOTAL PRCP = 0.00

10 METER WINDS -- AVG SPEED = 1.4 AVG DIR = 171 PEAK SPEED = 6.0 , OCCURRED DURING HOUR 23

NUMBER OF HOURS PER STABILITY CLASS A = 4 , B = 1, C = 1, D = 3, E = 0, F = 6, G = 9

WIPP METEOROLOGICAL DATA DAILY SUMMARY FOR 1/ 4/78

JULIAN DAY.HR	3 METER WIND DIR	SPD	PEAK SPD	TURB INT	10 METER WIND DIR	SPD	PEAK SPD	TURB INT	30 METER WIND DIR	SPD	PEAK SPD	TURB INT	BAROM PRESS
4. 0	148	2.1	3.6	0.10	147	3.7	5.8	0.07	152	5.2	6.9	0.06	896.6
4. 1	145	2.1	3.1	0.10	146	4.1	5.2	0.09	154	6.0	7.0	0.06	896.4
4. 2	137	1.6	2.6	0.14	136	2.9	4.7	0.08	150	6.0	7.2	0.07	896.3
4. 3	202	0.4	2.5	1.49	167	1.3	4.2	0.62	158	3.1	6.6	0.13	896.1
4. 4	54	1.3	1.9	0.21	72	1.2	2.3	0.33	131	0.9	2.3	0.63	896.1
4. 5	86	1.4	2.7	0.43	102	1.8	4.1	0.50	133	2.1	3.7	0.43	895.7
4. 6	65	1.4	2.7	0.86	76	1.6	3.6	0.72	151	1.2	3.3	0.44	895.7
4. 7	110	1.1	2.7	0.15	111	1.5	4.8	0.18	137	3.6	5.6	0.23	896.1
4. 8	74	0.7	1.9	1.04	76	0.9	2.8	1.05	135	2.6	6.1	0.35	897.1
4. 9	150	1.6	3.3	0.38	153	2.1	3.7	0.42	157	2.8	3.9	0.25	897.5
4.10	183	1.5	3.1	0.31	180	1.8	3.7	0.25	182	1.7	3.5	0.24	898.0
4.11	187	1.5	3.3	0.31	186	1.8	3.5	0.27	185	1.8	3.2	0.21	897.3
4.12	187	2.5	4.2	0.27	187	3.0	4.6	0.24	187	3.0	4.6	0.22	895.8
4.13	212	2.2	3.6	0.25	209	2.7	4.2	0.22	211	2.8	4.1	0.20	895.3
4.14	202	2.6	4.0	0.19	200	3.2	4.8	0.16	201	3.3	4.8	0.14	894.5
4.15	184	2.6	4.1	0.20	182	3.2	4.6	0.17	183	3.4	4.7	0.15	894.6
4.16	174	2.1	3.8	0.26	173	2.7	4.5	0.23	171	3.1	4.5	0.28	894.5
4.17	152	0.9	1.6	0.20	152	2.1	2.9	0.13	158	3.3	4.3	0.13	894.6
4.18	97	0.6	1.4	0.84	145	1.5	3.1	0.26	169	2.9	4.4	0.13	895.1
4.19	156	1.0	2.7	0.70	168	2.7	5.0	0.40	193	3.0	4.9	0.31	895.5
4.20	112	0.4	1.9	1.48	219	0.9	2.2	0.85	238	2.9	3.9	0.19	896.2
4.21	129	0.7	2.6	1.41	198	1.4	3.0	0.24	226	2.9	3.9	0.22	896.8
4.22	49	1.5	2.9	0.30	354	1.3	3.6	0.97	289	2.7	4.9	0.56	897.1
4.23	72	1.0	2.3	0.43	306	0.3	2.5	4.44	282	1.7	3.9	0.60	896.8

JULIAN DAY.HR	TEMPERATURES 3 M	10 M	30 M	DELTA TEMPS 10-3	30-3	30-10	STAB CLASS	DEW POINT	REL HUM	PRCP	RADIATION PARAMETERS SW SKY	SW REF	LW SKY	LW REF
4. 0	6.4	6.9	7.6	0.55	1.29	0.72	F	-2.3	57	0.00	0	0	276	319
4. 1	5.3	6.1	7.5	0.85	2.26	1.39	G	-2.7	60	0.00	0	0	250	310
4. 2	4.2	4.9	7.0	0.77	2.85	2.06	G	-3.1	62	0.00	0	0	250	306
4. 3	2.8	4.0	5.4	1.18	2.60	1.40	G	-4.7	68	0.00	0	0	251	297
4. 4	0.5	3.8	5.2	3.22	4.69	1.44	G	-5.4	70	0.00	0	0	254	291
4. 5	1.8	5.0	5.8	3.15	4.03	0.85	G	-3.8	66	0.00	0	0	264	295
4. 6	2.0	5.1	6.1	3.07	4.09	0.99	G	-3.1	64	0.00	0	0	274	299
4. 7	2.2	3.1	4.8	0.92	2.67	1.73	G	-3.5	68	0.00	0	0	266	298
4. 8	2.4	3.2	4.7	0.76	2.26	1.48	G	-3.2	67	0.00	34	7	263	302
4. 9	5.2	5.2	5.4	0.05	0.22	0.15	E	-1.0	58	0.00	182	36	277	326
4.10	7.6	7.5	7.3	-0.14	-0.36	-0.23	D	-0.1	54	0.00	229	52	282	348
4.11	10.0	9.8	9.6	-0.18	-0.42	-0.26	D	0.6	48	0.00	328	75	289	371
4.12	12.5	12.2	11.9	-0.27	-0.55	-0.31	C	0.8	42	0.00	331	75	296	384
4.13	14.6	14.4	14.0	-0.28	-0.58	-0.32	C	0.7	36	0.00	328	75	305	396
4.14	15.9	15.6	15.4	-0.23	-0.50	-0.29	D	0.5	35	0.00	241	54	309	396
4.15	16.3	16.2	16.0	-0.09	-0.29	-0.22	D	0.5	35	0.00	160	35	311	389
4.16	15.6	15.6	15.4	-0.00	-0.15	-0.16	D	0.2	36	0.00	112	24	304	379
4.17	13.9	14.4	14.9	0.51	1.03	0.50	F	-0.6	41	0.00	31	5	295	359
4.18	11.7	12.7	13.9	1.05	2.25	1.18	G	-1.5	41	0.00	0	0	288	337
4.19	9.5	11.9	13.4	2.34	3.95	1.58	G	-1.7	43	0.00	0	0	272	324
4.20	8.8	10.7	12.0	1.84	3.22	1.36	G	-2.2	44	0.00	0	0	256	313
4.21	6.4	10.1	12.0	3.73	5.70	1.94	G	-5.0	46	0.00	0	0	249	304
4.22	4.8	10.3	11.8	5.48	7.05	1.54	G	-4.7	53	0.00	0	0	246	300
4.23	5.6	11.2	12.2	5.57	6.61	1.01	G	-4.3	43	0.00	0	0	258	299

DAILY SUMMARIES

3 METER TEMP -- AVG = 7.8 MAX = 16.3 MIN = 0.5 AVG DEW POINT = -2.1 TOTAL PRCP = 0.00

10 METER WINDS -- AVG SPEED = 1.6 AVG DIR = 160 PEAK SPEED = 5.2 , OCCURRED DURING HOUR 1

NUMBER OF HOURS PER STABILITY CLASS A = 0 , B = 0, C = 2, D = 5, E = 1, F = 2, G = 14