Boyes
Roybal
7222

SAND78-1786
Unlimited Release

COCOM, A Systematic Approach to Meeting Locational and Contour Tolerances in a Consistent Manner

Thomas P. Conlon, Sr.

Prepared by Sandia Laboratories, Albuquerque, New Mexico 87185 and Livermore, California 94550 for the United States Department of Energy under Contract AT(29-1)-789

Printed January 1979

Sandia Laboratories

SF 2900 Q(7-73)

Issued by Sandia Laboratories, operated for the United States Department of Energy by Sandia Corporation.

NOTICE

This report was prepared as an account of work sponsored by the United States Government. Neither the United States nor the Department of Energy, nor any of their employees, nor any of their contractors, subcontractors, or their employees, makes any warranty, express or implied, or assumes any legal liability or responsibility for the accuracy, completeness or usefulness of any information, apparatus, product or process disclosed, or represents that its use would not infringe privately owned rights.

Printed in the United States of America

Available from
National Technical Information Service
U. S. Department of Commerce
5285 Port Royal Road
Springfield, VA 22161

Price: Printed Copy $4.50; Microfiche $3.00

SAND78-1786
Unlimited Release
Printed January 1979

COCOM, A SYSTEMATIC APPROACH TO MEETING LOCATIONAL AND CONTOUR TOLERANCES IN A CONSISTENT MANNER

Thomas P. Conlon, Sr.
Quality Control Development and Special Projects Division 1221
Sandia Laboratories
Albuquerque, NM 87185

ABSTRACT

The Coincident Coordinate Method is a system to be used throughout the three principle phases of production, i.e., design definition, manufacturing, and inspection. It was developed to eliminate certain inconsistencies and inefficiencies that are inherent in current practices. Its primary objective is that of maintaining the designer's concept of fit and function of piece part assemblies throughout the entire production system. This is accomplished in three steps. First, a coordinate system and methods for dimensioning and tolerancing in that system are specified which are consistent with the way mating parts fit and function with one another in their assembly. Second, an effort is made to maintain the specified coordinate system throughout the manufacture of each part by assuring that this system is as nearly coincident as possible with one that is defined by the directions of travel of the "ways" of each machine used (these directions can in most cases be assumed perpendicular to one another to a high degree of precision. Finally, a means is provided for the transformation of inspection data on the characteristics of manufactured parts to a coordinate system which helps to accomplish the second objective stated above in that it can be related to those defined by the machines used, at least with respect to statistics of errors made by the machines.

Steps for implementing Coincident Coordinate Method are presented along with results from actual applications which have proven that increased productivity and reduced costs are possible.

CONTENTS

	Page
Foreword	7
Introduction	9
Coincident Coordinate Method	10
General Discussion	10
Implementing Objective 1	11
Implementing Objective 2	12
Implementing Objective 3	12
Typical Procedures Involved in COCOM-COCOMP Application	14
Design Definition Procedures - General	14
Description of Fit and Function by Examples	17
Manufacturing - General	21
Enhancement of Machine Capabilities	21
Preserving Design Coordinate System - Single Machine	23
Preserving Design Coordinate System - Multiple Machines	26
Proper Division of Tolerances	29
Inspection	31
Findings Derived Through Trial Applications of COCOM	33
References	37

ILLUSTRATIONS

Figure		Page
1	Example of Piece Part	14
2	Plan View of Piece Part with X,Y Axes Established	15
3	Piece Part with Feature Axes and Contours Identified	16
4	Press Fit in Corner Holes	18
5	Tight Fit on Center Hole; Some Clearance on Other Holes	19
6	Close Fit; Cover to Container	20
7	COCOM Enhancement of Machine Capabilities	23
8	Schematic of Stamping Die for 9-Hole Pattern - Escapement Plate	25
9	Schematic of Small Angle Divider Mounted on Jig Grinder Table	28
10	Schematic of Incomplete Stamping Die	28

TABLES

Table		Page
I	Locational Parameters for Features and Contours in Analytic Geometry Notation	17

FOREWORD

The problem of establishing locational relationships among natural and/or man-made objects with a desired degree of accuracy or precision has been ever present. Early scholars recognized that errors of distance and angle in measurements of the locations of objects on land and water surfaces of the earth were inevitably compounded with errors in establishing the origin and orientation of their selected measurement coordinate system. Under those conditions, the accuracies with which the positions of the objects and their locational relationships could be determined were unknown.

This problem was attacked early in recorded history by directing a considerable portion of the known body of science and mathematics toward fixing and refining the location and orientation of some coordinate system in the earth relative to its position in the solar system.

The basic problem confronting modern engineering with regard to locational relationships of features and contours of precision piece parts is similar to that which confronted early scholars; however, there are additional intriguing complications.

Because of the variability that exists in all manufacturing and measuring processes, each production part presents itself to inspection as "a brand new earth" with regard to unknown locational relationships that exist among its features and contours. In addition, the "solar system" to which the part belongs does not come into existence until after it has been matched and fitted at assembly with mating parts.

This report covers efforts which have brought to light some rather surprising facts concerning the quality improvement and cost reduction benefits that await the complete solution of the basic engineering problem of accurately relating features and contours in manufactured parts. This work has produced a concept and practical methods of implementation which have proven to be successful toward solving this problem.

COCOM, A SYSTEMATIC APPROACH TO MEETING LOCATIONAL AND CONTOUR TOLERANCES IN A CONSISTENT MANNER

Introduction

A basic function of all manufacturing efforts is achieving the proper match and fit of the individual piece parts that form a functional component or system of components. A fundamental problem in the present methods of design definition, manufacturing, and inspection of the piece parts is that the match and fit of the parts is based on some arbitrarily selected feature locations (i.e., data) such as plane intersections and/or plane surfaces instead of on an array comprised of all the features and contours that intimately interface in the assembly. A significant result of this basic problem is a difficulty in maintaining throughout the production sequence the proper locational relationships of features (e.g., holes, slots, bosses, and tabs) and contours (e.g., edge configurations, camming surfaces, and forms of ratchet teeth) of the mating parts. Present methods also result, at inspection alone, in rejection of a large percentage of piece parts which actually satisfy design intent.

The Coincident Coordinate Method (COCOM) was developed to better achieve proper locational relationships and thus eliminate the associated inefficiencies and inconsistencies in the present design definition, manufacture, and inspection of piece parts. The COCOM concept is based on the recognition that mating parts may be better matched and fitted by giving proper consideration throughout production to the array of all those feature locations and contours that intimately interface with one another in the assembly operation.

Specifically, the COCOM objectives are:

1. to provide a method for specifying a coordinate system and methods for dimensioning and tolerancing in that system which are consistent with the way that mating parts fit and function with one another in their assembly;

2. to maintain that coordinate system specified throughout manufacture of each part by assuring that this system is, as much as possible, coincident with one that is defined by the direction of travel of the "ways" of each machine used; and

3. to provide a method for transforming inspection data on the characteristics of these parts to a coordinate system in which, with regard to error statistics, there are known relationships with those machine systems in which the parts were produced, and which, as a result, aids in the implementation of 2 above.

These objectives constitute the essence of a method to be used throughout a total production system. This report describes COCOM and the steps for implementing it into a total production system. Applications of the method which have resulted in increased productivity and reduced costs are discussed.

Coincident Coordinate Method

General Discussion

In developing COCOM the underlying objective was to derive a means by which feature and contour locations of various parts of an assembly could be related to a single coordinate system. This eliminates difficulties inherent in present practices that can result, during design definition,

manufacture, and inspection of parts, because of the use of a number of coordinate systems. In present methods of inspection, for example, the COCOM objective is not being met by referencing direct measurements to features or contours within the part because the latter, when used to define a reference frame for taking measurements, exhibit manufacturing errors similar to those being measured. This situation results in the possible use of any number of coordinate systems whose origins and orientations relative to each other are unknown, much less to any single coordinate system, and none of which is likely to relate realistically to the position of the part at assembly.

COCOM essentially eliminates inspection difficulties arising from the use of multiple coordinate systems by fitting a unique coordinate system to an appropriate array of feature and/or contour locations in each of the individual manufactured parts comprising an assembly. Desired locations of these features and contours are entered as input to a mathematical model; likewise measurements of these locations obtained in some arbitrary coordinate system at inspection are used as input. The model derives a best fit coordinate system in which deviations of desired from actual locations can be determined. This system is found by translating and rotating desired and actual locations relative to one another until some measure of fit is minimized. Use of the mathematical model amounts to an implementation of Objective 3 outlined above; however, its proper use, in the COCOM context, depends on the prior implementation of Objectives 1 and 2.

Implementing Objective 1 (Expressing Design Intent) -- In implementing Objective 1, the concept of proper fit and functional relationship of the mating parts must be firmly established. Specific inputs from the designer are:

1. establishment of a convenient coordinate system that is not necessarily associated with any particular feature locations and/or contours existing in the piece part itself (the coordinate system used for the design layout for a complete or partial assembly of parts can be used for the coordinate system for each piece part);

2. definition of all features and contours of the part with respect to this single, selected system in the notation of analytic geometry;

3. identification and tolerancing of those interfacing piece part features and contours that are predominant in determining fit at assembly; and

4. tolerancing of the remaining features and contours, the ultimate location of which will be determined by the fit of the predominant features identified in 3 above.

Implementing Objective 2 (Preserving the Design Coordinate System in Manufacturing) -- Successful implementation of Objective 2 requires maintaining, throughout the manufacturing operations, as high a degree of coincidence as possible with that single coordinate system established in the design definition, i.e., that referred to in paragraph 1 above. Accordingly, manufacturing planning must assure the following:

1. that generation of all part features and contours on a single machine are done so that no adjustment of the initial setup is made during the performance of successive operations; and

2. that some method is used to maintain coincidence with the coordinate system of the design definition when more than one machine is required for the operations. This can be done to sufficiently close approximation by utilizing some results from analyses with the mathematical best-fitting model which are further described below.

Implementing Objective 3 (Relating Inspection Results to the Coordinate System of Manufacturing) -- Implementation of Objective 3, alluded to in the earlier inspection discussion, is achieved by means of

the computer program called Coincident Coordinate Method Program (COCOMP) (see Reference 1).

This program, among other things, provides for making calculations with the mathematical model mentioned wherein distances between the predominant actual and desired feature and/or contour locations are minimized in accordance with some measure of fit in a best fit coordinate system. Thus far, two measures of fit are being used. One of these is the sum of the squared distances between each of the actual and desired locations (least squares approach, see References 2 and 3). The other is the maximum distance between the actual and desired locations for all predominant features (mini-max approach, see Reference 4). Any remaining features and contours which do not enter into the fitting calculations are transformed to the same best fit coordinate system obtained.

In COCOM, the mini-max procedure is used only in a few exceptional cases. The least squares approach, on the other hand, has been relied on almost exclusively, not only because it employs a more generally acceptable measure of fit but also because it is more amenable to mathematical analysis. In what follows, therefore, any discussion or results will be given with reference to the least squares approach.

Because of certain mathematical properties of the least squares approach, COCOMP transforms inspection measurement data about locations of features and contours of a single part to a coordinate system that is the most appropriate one in which to evaluate the conformance of that part to design intent. For example, the averages of the feature and contour locations taken over a number of parts (each in its best fit coordinate system) closely approximate the corresponding locations in the coordinate system of the equipment on which they were generated. Similarly, the variances of errors between actual and nominal positions can be related for the two systems. Thus, although the COCOMP program may be used only for product acceptance, it also may be used for evaluations of processes used to generate the product, and this provides the best measure of product conformance to design intent. Consequently, the implementation of

the entire COCOM concept provides a means for evaluating the total design, manufacturing, and inspection system.

With this overview in mind, it is timely to consider typical procedures, in terms of a single piece part, which illustrate the general application of the COCOM concept and principles.

Typical Procedures Involved in COCOM-COCOMP Application

Design Definition Procedures - General

Figure 1 is an illustration of a piece part which may be considered from a variety of viewpoints relative to its fit and function in an assembly of undefined nature. In present design definition practices, the piece part requires establishment of a "Datum-Datum Orient" or "Datum Reference Frame" in order to manufacture and inspect the part. Regardless of how this part may fit and function in an assembly, it would be unlikely that, by using either practice, particular feature locations and/or contours could be specified on which to establish a coordinate system that will relate realistically to the position of the part at assembly.

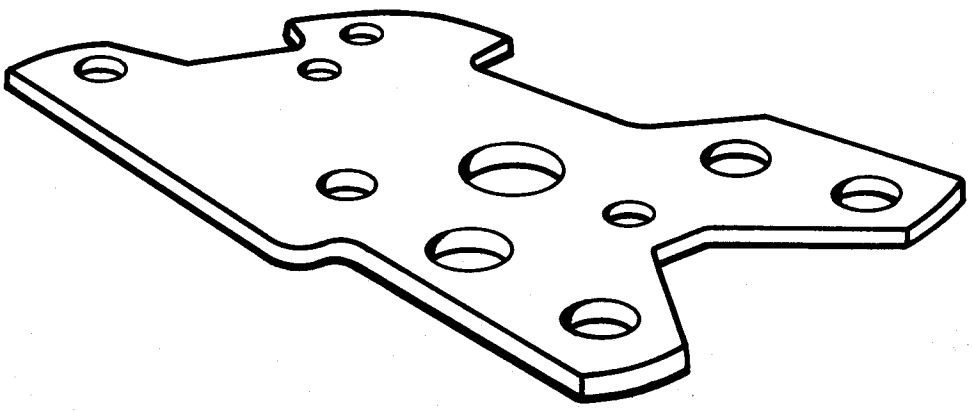

Figure 1. Example of Piece Part

Figure 2 is a plan view of the part shown in Figure 1. The X and Y axes shown in Figure 2 in the COCOM approach were arbitrarily chosen for convenience. At this point, these axes are not purposely associated with any feature location existing in the part itself. With this choice of axes, the COCOM process first involves describing the locations of all features and contours in the notation of analytic geometry, i.e., in terms of such parameters as the X,Y coordinates of feature axes, centers and radii of circular arcs, etc. In Figure 3 identifying symbols have been assigned to all features and contours in the part. For example:

P1, P2, etc., refer to such features as hole centers;

L1, L2, etc., refer to straight line contours; and

C1, C2, etc., refer to circular arc contours.

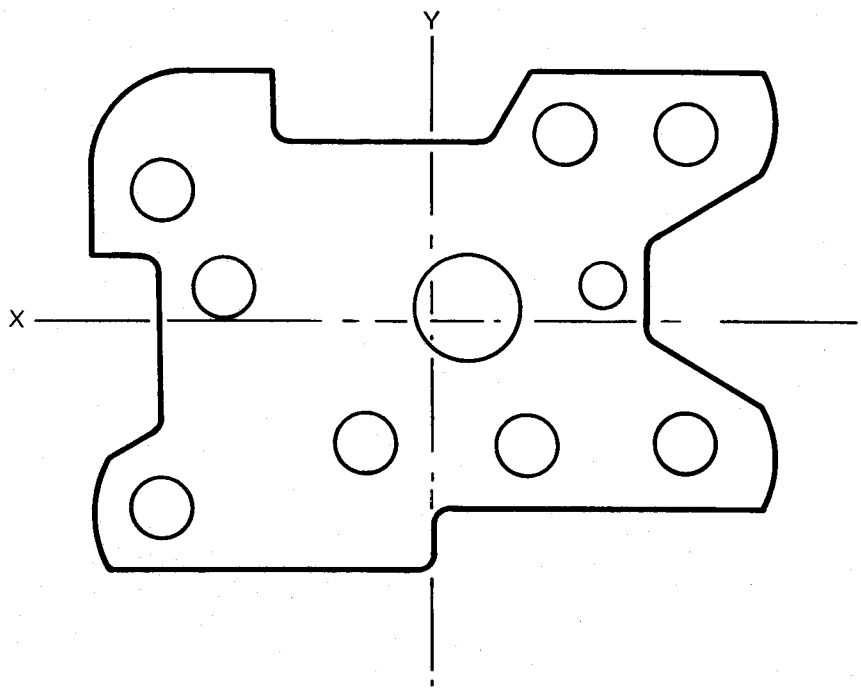

Figure 2. Plan View of Piece Part with X,Y Axes Established

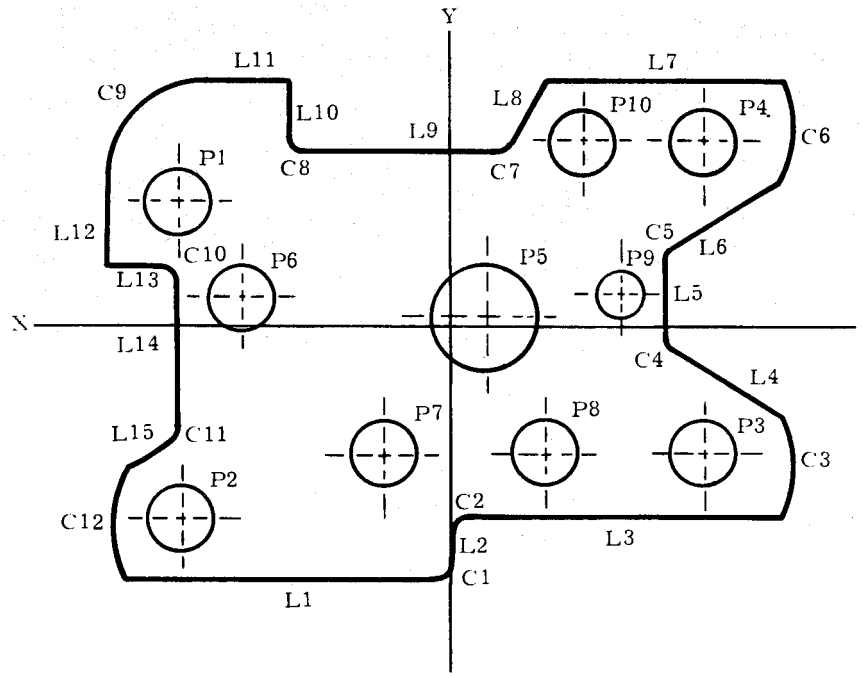

Figure 3. Piece Part with Feature Axes and Contours Identified

For brevity, actual values of locational parameters for only a few of the features and contours from Figure 3 are presented in tabular form in Table I. It should be noted here that, regardless of the form of the dimensioning on the product drawing that may at first be available, there are programs such as Automated Programmed Tools (APT) which will readily convert the available form to that required by COCOM, i.e., that indicated in the example of Table I. If these programs are utilized, it should not be necessary to perform burdensome "hand" calculations when using COCOM.

TABLE I

Locational Parameters for Features and Contours in Analytic Geometry Notation

Feature or Contour Designation	COCOM DEFINITION Coordinates X	Y	Radius, Slope, or Parallel Axis
P1	-1.100	0.500	
P2	-1.100	-0.760	
P3	1.050	-0.510	
P4	1.050	0.720	
P5	0.160	0.050	
L8*	-0.170	0.100	1.732
L9	0.	0.700	(X)
L10	-0.650	0.	(Y)
L11	0	1.000	(X)
C7	0.133	0.790	0.090
C8	-0.560	0.790	0.090
C9	-1.050	0.680	0.300

*Coordinates refer to a point on the line so that the point-slope formula may be used (consistent with APT)

Description of Fit and Function by Examples -- Thus far, the selection of a coordinate system, the labeling of the part features and contours, and the expression of the actual values of locational parameters has been done irrespective of the fit and function of the part. In the process of applying COCOM, the next step is most important, namely, that of identifying those part features and/or contours which are predominant in terms of intimately interfacing with features and contours on mating parts and which thus establish the ultimate position of the part at assembly. In the following examples, this process is illustrated by considering three different aspects of fit and function for the same part.

In the first example (Figure 4), the part under consideration (upper part) is to be mated with a similar part (lower part). Here the ultimate position of the part at assembly will be mainly determined by the compos-

ite of the deviations of locations in holes P1, P2, P3, and P4 relative to their specified locations on the drawing. The reason for this is that the designer has specified a press fit for those holes and clearances for the remaining holes. The unique best fit coordinate system in which the locations of all features and contours are evaluated is that which minimizes the measure of fit between the actual and the desired locations of P1, P2, P3, and P4.

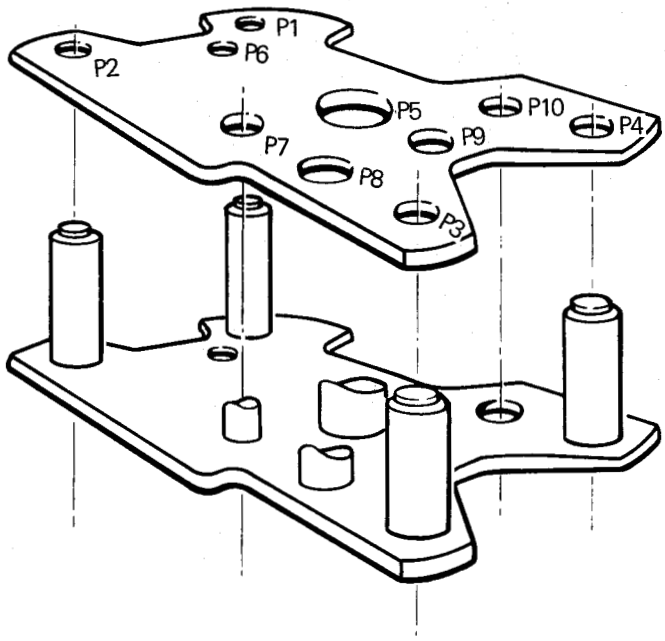

Figure 4. Press Fit in Corner Holes

In the second example (Figure 5), the part under consideration (upper part) is also to be mated with a similar part (lower part). In this case, however, the designer has specified a tight fit of the shaft in hole P5 with clearances for the remaining holes. Thus, the freedom of movement of the part in X and Y is restricted, while the orientation of the part about the shaft (i.e., rotation) at assembly is mainly determined by a composite of the deviations of the locations in the remaining holes, P1 through P4 and P6 through P10 relative to their specified locations on the drawing. The best fit coordinate system in which the locations of all features and contours are evaluated is that which minimizes the measure of fit between the actual and desired locations of P1 through P4 and P6 through P10,

under the restriction that the origin of this system is located at the actual center of P5. (COCOMP includes the capability of determining the best fit system with this restriction.)

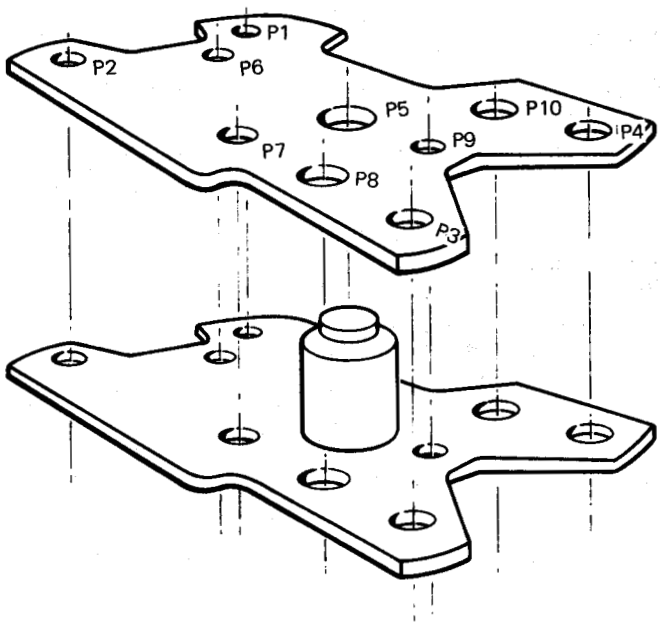

Figure 5. Tight Fit on Center Hole;
Some Clearance On Other Holes

In the third example (Figure 6), the part under consideration (upper part) is to be fitted into the inner edge of the container (lower part). In this case, the designer has specified a close fit between the external contours of the part and the inside contours of the container. While close fits of the leads to be mounted in the part holes are also required, there is sufficient flexibility in these leads to allow larger errors in the locations of the holes than in the part contours. Here, the ultimate position of the part at assembly will be determined mainly by the composite of the deviations of points along the contours (L1 through C12) relative to their specified locations on the drawing. The best fit coordinate system in which the locations of all features and contours are evaluated is that which minimizes the measure of fit between the actual and the desired

locations of points that best characterize the contours of the part. (COCOMP also includes the means by which to determine these characteristic points.)

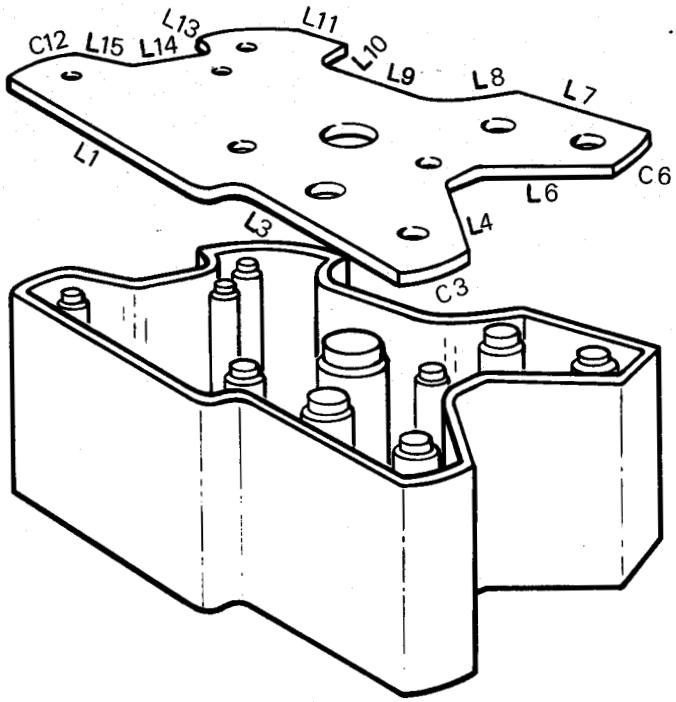

Figure 6. Close Fit; Cover to Container

Of course, if both holes and contours are predominant in the proper fit of the example part, then the fitting procedure would use input data pertaining both to the hole locations and the points that are characteristic of the contours.

The most important concern of the designer is that of preserving the integrity of his concept of fit and function of piece parts and assembly throughout the stages of design definition, manufacture, and inspection. The three examples above illustrate not only the manner in which piece parts will assemble with regard to predominant features and contours, but also that the latter may be readily identified. With these features and contours identified according to fit and function at assembly, it was shown that each situation produced its own best fit coordinate system.

From these examples and for reasons given previously, it should become clear that this system is a much more appropriate reference frame in which to preserve design concept than those presently used (i.e., Datum-Datum Orient or Datum Reference Frame).

Up to this point, the subject of tolerances has been avoided because it is more properly covered in the following discussion of manufacturing processes.

Manufacturing - General

The producibility of parts is closely associated with the proper division among the feature and contour locations of the total allowable tolerances of interfacing members. This division should always be considered in connection with the relative capabilities of the manufacturing equipment used to generate the various types of features and contours in the parts. Before treating the subject of tolerances, it would be well to consider how COCOM enhances these capabilities and how it can relate errors in the best fit system to those made by the manufacturing machines so that during manufacture the design definition coordinate system can, in a statistical sense, be preserved.

Enhancement of Machine Capabilities -- It was earlier explained how the taking of measurements with respect to a datum reference frame within the part results in compounding manufacturing errors pertaining to the measured features with those of the datum features. It is clear that the average errors observed by this procedure can be expected to exceed those of the manufacturing equipment and would lead to the erroneous conclusion that the equipment was less capable than is actually the case. In the same sense that this procedure produces an apparent degradation of the machine capability, COCOM has the opposite effect. Depending upon the number of predominant features that are entered into the mathematical model, the average errors in the best fit system can be expected to be less than those of the manufacturing equipment. This effective reduction in errors may be viewed as an enhancement of machine capability and is basically the

result of compensations among random errors made by the equipment in placing the features.

Analysis with the mathematical model used in finding the best fit coordinate system (least squares measure) for the predominant features of a part provides the means by which to show quantitatively the enhancement achieved (see Reference 3). From the result of the analysis, if (X_i, Y_i), $i = 1, 2 \ldots N$ are the desired locations of the features and

σ_i is the standard deviation of the error made by the machine in placing the coordinate of the ith feature (either in the X or Y direction) with respect to the desired location,

while

σ_i' is the standard deviation of the corresponding error as measured in the best fit system,

then if σ_i is constant for all i, an upper bound on the ratio σ_i'/σ_i for all the coordinates (in all possible cases) is given by

$$\frac{\sigma_i'}{\sigma_i} \leq \sqrt{1 - \frac{1}{N}}, \quad N \geq 1 \tag{1}$$

and the root mean square value (rms) of σ_i'/σ_i for all of the coordinates of the predominant features is given to a very high order of accuracy by

$$\left(\frac{\sigma_i'}{\sigma_i}\right)_{rms} = \sqrt{1 - \frac{3}{2N}}, \quad N \geq 2 \quad .^{*} \tag{2}$$

Both the upper bound and the average are plotted in Figure 7.

---

*The accuracy is a result of the fact that σ_i is of an order of magnitude less than 0.001 in. for most typical machines.

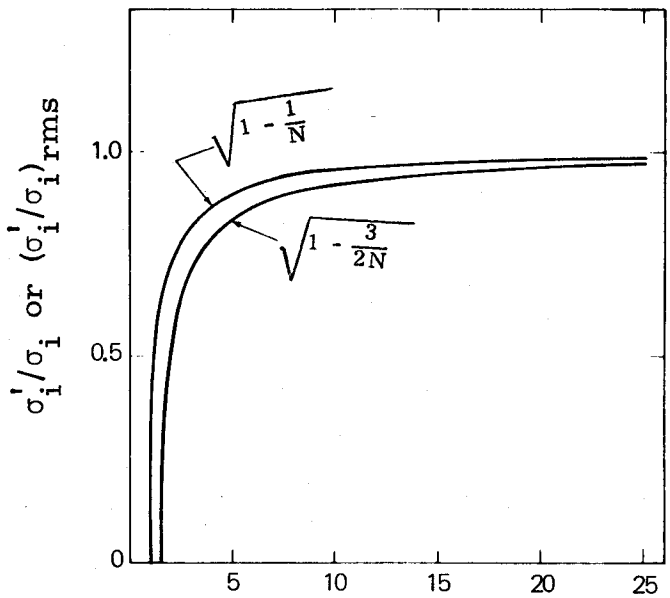

Figure 7. COCOM Enhancement of Machine Capabilities

Clearly, the ratio σ_i'/σ_i is a measure of the enhancement of the inherent machine capability. For example, for N = 9 the standard deviation of the coordinate error in the best fit system is no more than 0.95 times that of the machine. For the same value of N it is seen that the root mean square value of coordinate error is only 0.92 times that of the machine.

Mathematical expressions (1) and (2) were derived under the assumption that some true (constant) value, σ_i, exists for the machine capability. It should be clear that estimates for this value can be obtained from Equation (2) if some estimate for σ_i' is available. It will be shown later how such an estimate can be obtained.

Preserving Design Coordinate System - Single Machine -- It will be recalled that in the COCOM system all part features and contours generated on a single machine are so done that no adjustment of the initial machine setting is made during the performance of successive operations. It will also be recognized that this procedure is contrary to current practice in that intermediate manufacturing data are normally used even though they

are not indicated as such on the drawing. The advantages of performing all operations in the initial machine setting will now be discussed.

In any manufacturing situation, there are essentially three ways to make parts:

1. fabricate the part directly on some machine such as a milling, drilling, or boring machine (this approach involves direct operator control);

2. fabricate the part on the same type of machine indicated above, except that the control is maintained by some kind of numerically controlled system; or

3. fabricate the part by means of intermediate tooling, such as a stamping die, wherein the intermediate tooling itself is first fabricated on a machine tool, such as a jig borer, jig grinder, or electrical discharge machine.

Since the method indicated in (3) above encompasses the greater span of manufacturing complexities, it will be used to demonstrate the advantages of complete fabrication in a single coordinate system without adjustment of the machines used to fabricate the intermediate tooling. This is a typical situation in which there is substantial evidence to support the contention that only a single coordinate system should be used; namely, that obtained with the initial setting of the machine tool.

Suppose it is required to fabricate a die set to produce escapement plates, each with a pattern of 9 holes, in which the positional tolerance of each hole is 0.001 in. diameter. Past experience with COCOM indicates that the standard deviation of the error made by the jig borer in placing the holes in the die is approximately 0.00007 in. The standard deviation of the error made by the ensuing stamping process in placing the holes in any part while using the die is, again from experience with COCOM, approximately 0.0001 in.

Tool prove-in, i.e., verification of the die capability to produce parts to print tolerances, consists of measuring and evaluating the conformance of the first 15 pieces made with the die.

Figure 8 is a drawing of the die with its 9-hole pattern. Also shown in the figure is a diagram which shows what is meant by the positional tolerance of the hole location given above.

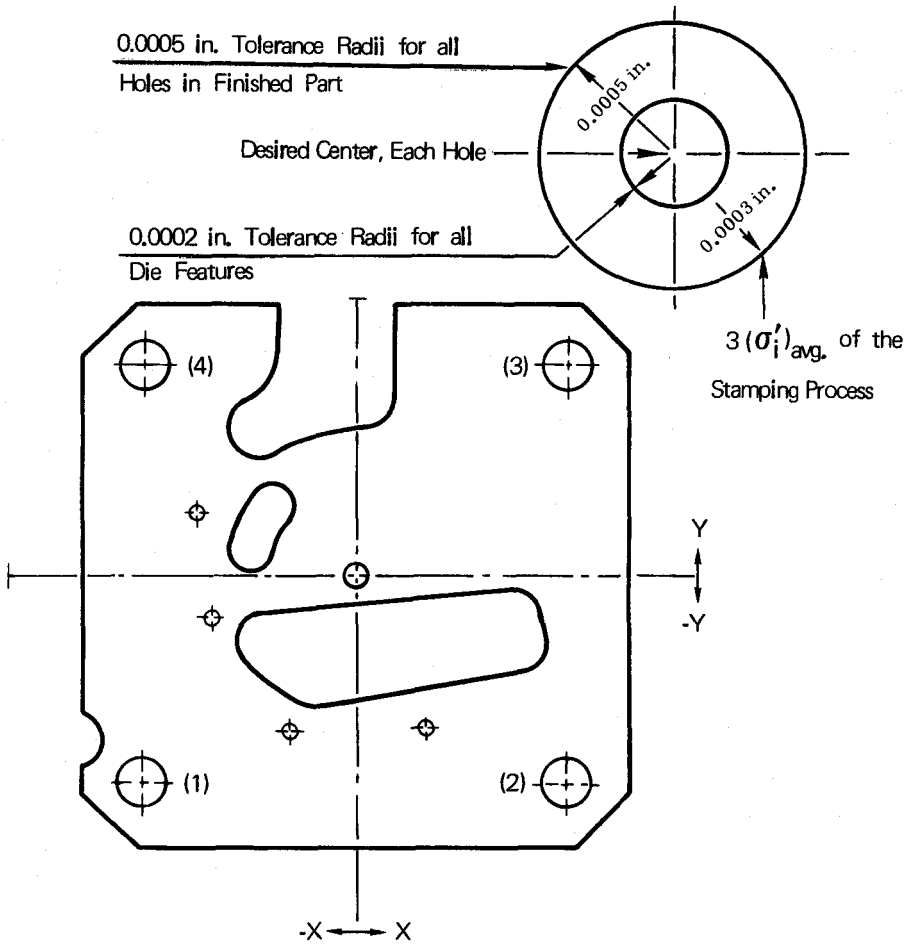

Figure 8. Schematic of Stamping Die for 9-Hole Pattern - Escapement Plate

Even though the positional tolerance of 0.001 in. diameter is without regard to any particular feature locations within the hole pattern, suppose that the die manufacturer elects to select hole (1) as an intermediate manufacturing datum, and hole (2) as a corresponding datum orient. It should be noted that the locational tolerance of the die features must

be maintained within radii of 0.0002 in. in order that the variability of the stamping process will not cause locations of any of the holes in the pattern to exceed their respective 0.001 in. diameter positional tolerance.

Particular note should be given to the fact that adjustment of the machine tool axes to a new location, such as the datum or the datum-orient, does not affect the variability of the locations of the holes that will be generated subsequent to the adjustment; in this example, holes (3) through (9). Furthermore, the variation in X for datum-orient hole (2) will not be affected. Thus, the only benefit achieved by such adjustment is a possible reduction in both the X and Y variations for hole (1) and in the Y variation for hole (2).

Since the mechanics of these adjustments are time consuming, require great operator skill, and are fraught with opportunities for error, it has been found that the small advantage to be gained, i.e., a possible reduction in the variable in 3 coordinates out of 18, is not worth the effort and risk. In fact, a substantial amount of experimental evidence exists which indicates that the adjustment of the machine coordinate system increases rather than reduces the overall error.

Preserving Design Coordinate System - Multiple Machines -- The principles discussed above with regard to operations involving a single machine also apply to any additional operations which may have to be performed on other machines.

In discussing the implementation of Objective 2, it was stated that a method be used to maintain a high degree of coincidence with the design definition coordinate system when more than one machine is required. It was also indicated that this could be done to a sufficiently close approximation by use of the mathematical best fit model.

It was seen in Figure 7 that as N increases, the ratio of the standard deviation in the best fit system to that in the machine system (i.e., σ_i'/σ_i) approaches 1. This implies that as N increases, the best fit

and the machine coordinate systems approach coincidence in the sense that errors in the two systems will, on the average, be the same. Thus, if a large number of feature locations were used in the best fitting procedure, average errors in the coordinates of all the features and contours in that system would be very nearly equal to those in the original machine system. Effectively, then, with a large enough N the machine coordinate system can be recovered in a statistical sense.

In any event, as has been reiterated several times, the most appropriate coordinate system to use when changing from one machine to another is just that best fit system corresponding to N, whatever its value. That is to say, if either a large or small number of predominate features are placed in a part on one machine, then the best reference frame to use with a succeeding machine is the best fit system obtained by using the data for these features in the mathematical model.

The manner in which the best fit coordinate system is "recovered" in the actual practice of switching from one machine to another can be illustrated by an example. Suppose that only the die features, which will be used to generate the holes for the part shown in Figure 8, have been completed on a jig borer. It is now necessary to transfer the incomplete die to a jig grinder to generate the contour portion of this tooling. The problem is one of locating this work piece in the coordinate system of the jig grinder so that this latter system corresponds as closely as possible to that best fit system of the incomplete die as derived by using only the locations of the four predominant holes for input to the mathematical model.

Figure 9 is a sketch of an assembly composed of jig grinder table mounted with a small angle divider. The coordinate system indicated is that of the machine table and small angle divider superimposed on one another. Figure 10 shows the incomplete die with its design coordinate system indicated. At this point the procedure is to locate the die on the jig grinder assembly so that the coordinate system of the latter coincides roughly with the design coordinate system of the die. Measurements of hole center locations are next obtained by using the measuring facilities in

the machine. These measurements, along with their drawing nominals (i.e., their desired locations), are then used as input to the mathematical model. The output from the model provides the translation parameters (h for x direction, k for y direction) and a rotational parameter (θ) that can be used to adjust the machine so that the desired coincidence of the jig grinder coordinate system with the best fit system for the incomplete die is achieved.

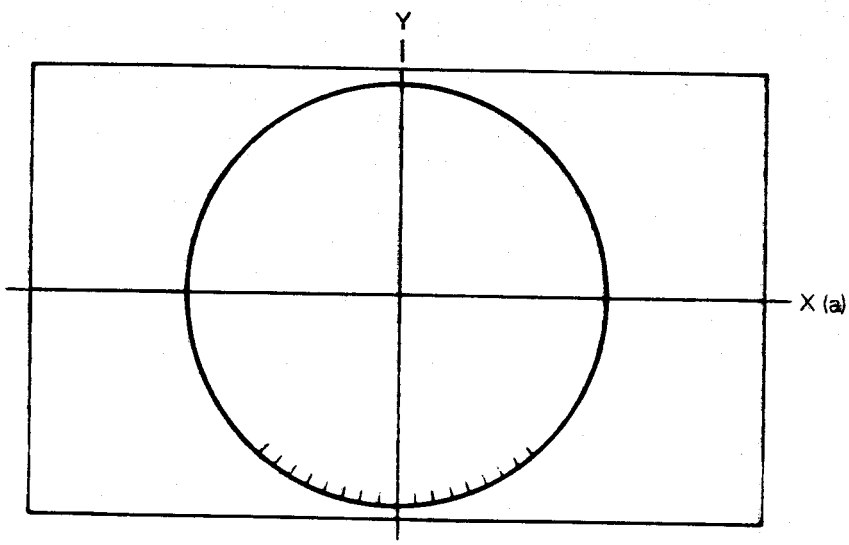

Figure 9. Schematic of Small Angle Divider Mounted on Jig Grinder Table

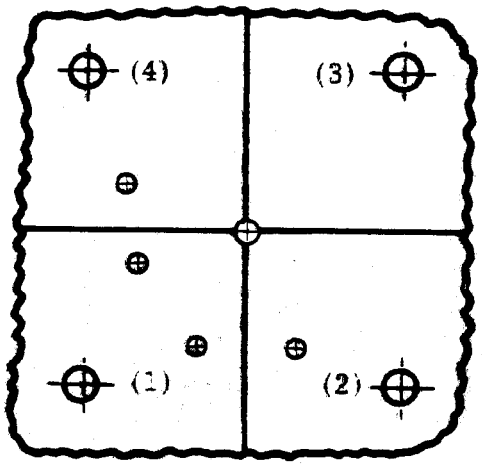

Figure 10. Schematic of Incomplete Stamping Die

In contrast with the adjustments required in the use of the datum-datum orient previously discussed, those required in the above example can be made with a great deal more accuracy for the following reasons:

1. the adjustments are made on the basis of averaging out both actual locational errors and measurement errors over a substantial number of points; and

2. the procedures involved require much less skill and fewer judgements on the part of the operator, and thus are much less subject to error from this source.

Proper Division of Tolerances -- As indicated previously, it was necessary to defer the subject of proper division of tolerances until the matters of process capability enhancement and design definition coordinate system preservation during manufacturing were completed. With these matters now covered, it is timely to discuss this subject.

In order to make a proper division of tolerances for the manufacture of a particular part, it is first necessary to have a reasonably good estimate of the capabilities of the machines that are to be used in generating the features and contours in the part. Present methods of design definition, manufacture, and inspection preclude obtaining such reasonably good estimates because of their failure to preserve a known relationship with the original design definition coordinate system throughout these phases of production (again in a statistical sense).

On the other hand, in COCOM the necessary relationship with the design coordinate system is always assured to a high level of approximation. As a result it is possible to obtain estimates of the capabilities of the machines being used. Suppose, for example, k parts with N features on each part were made by some machine, and that measurements $(\hat{X}_i, \hat{Y}_i)$ were obtained for the locations of the features on each part. These

measurements can be entered along with their corresponding nominals (X_i, Y_i) into the mathematical model to obtain best fit coordinates, $(\hat{X}_i', \hat{Y}_i')$, i = 1 through N, for each part. With these data, an estimate, $(\sigma_i')_{rms}$, for the root mean square value of either the X or Y coordinates can be obtained; with this, a corresponding estimate, σ_i, for the machine capability can be obtained by substitution of the estimate for $(\sigma_i')_{rms}$ into Equation (2) as referred to in connection with Figure 7 to give:

$$\sigma_i \approx \left(\sigma_i'\right)_{rms} \Big/ \sqrt{1 - \frac{3}{2N}}\ , \quad N \geq 2\ . \tag{3}$$

Of course, over a period of time, more estimates of this kind can be obtained from different jobs on the same machine and these can be pooled to give an increasingly more accurate estimate for the true value, σ_i, for the standard deviation of the machine. It follows, then, that with the improved estimates of σ_i, Equation (2) becomes an increasingly more reliable predictor of the root mean square value, $(\sigma_i')_{rms}$, in the best fit system for parts with varying number of predominant features and contours.

A necessary condition for making a realistic apportionment of the total allowable tolerances among all the features and contours of parts making up a complete or partial assembly is that a known relationship with the design layout coordinate system be maintained throughout the design definition, manufacturing, and inspection phases of production. Because of the uncertainty in this relationship that exists in current practice, it is necessary to compensate by reducing the overall tolerance allowance. This can result in the imposition of unnecessary restrictions in manufacturing.

In contrast with this, it has already been emphasized that with COCOM a known statistical relationship with the design layout coordinate system is always maintained. This obviates the need for the compensations and eliminates the possible restrictions associated with current practice.

If, for each set of interfacing features and contours, a realistic value for the total tolerance is obtained, then its apportionment among these features and contours may be considered. With any production system, the efficiency of the processes used in making parts will depend upon making that apportionment with due regard for:

1. an appraisal of potential processes having the inherent capabilities which are consistent with the overall tolerance requirements;

2. the relative process capabilities that pertain to the types of features and contours involved; and

3. the relationships between predominant and other classes of features.

It is suggested that only by using COCOM can due regard truly be given to items 1, 2, and 3. The reasons for this have already been pointed out in the previous discussions; that is, with other production systems, adequate knowledge of process capabilities, relationships among reference frames for piece parts, etc., is lacking.

While proper consideration of these items would be essential to optimizing the implementation of COCOM, it would be difficult to discuss them in a general way because each situation presents unique problems with various possible solutions. The discussion presented, however, emphasizes the need for close cooperation among those involved well before the design definition becomes firm.

Inspection

Generally, in present practices inspection of product is performed only on the basis of what is observed in the part presented to the inspectors as compared with specifications on the part drawing. Likewise, production tooling is inspected only with regard to what is observed in the tooling as compared with specifications on the tool drawing. Obviously

this presents a problem in trying to relate inspection of the part to the inspection of the tooling from which it was made.

The datum-datum orient method (one of the two principle methods now in use) ostensibly provides a means of circumventing this problem because it does maintain a common reference frame for dimensioning and tolerancing of both parts and tooling. However, this single virtue of this method is overshadowed by its deficiencies, already noted, which are:

1. failure to define parts in a manner that is consistent with their fit and function at assembly,

2. failure to maintain a known relationship with the design coordinate system during manufacture and the difficulty and cost involved in adjusting to datum features, and

3. failure to inspect product in a coordinate system that has a known relationship to the design definition. (Errors in properly "picking up" on datum features have been found to be compounded by existing errors in other features.)

The alternate to dimensioning and tolerancing, which was intended to circumvent the problem, is described in ANSI-Y 14.5-1973 (American National Standard Engineering Drawing and Related Documentation Practices). This method is characterized by the use of optical charts or fixed gages for the inspection of parts, but it contains no prescribed approach for dimensioning and tolerancing and, therefore, for the inspection of tools and gages used in production. As a consequence of the latter omission, the dimensioning, tolerancing, and inspection of tools and gages are done by the use of the datum-datum orient procedures. Obviously, with this alternate method the fundamental problem of relating inspection of parts, tools, and gages has not been resolved.

It has been suggested that this problem with the ANSI 14.5 procedure could be solved by retaining the gaging methods for inspection and partially adopting the COCOM concept by using it for the dimensioning,

tolerancing, and inspection of tools and gages. Although this approach is certainly feasible, experimental evidence has shown that it would be far more efficient to use the total COCOM concept by including it in the inspection function as well; that is, to eliminate gages entirely.

In the use of COCOM, the inspection function is actually included in the evaluation of the tooling used in the production process. It will be recalled from a previous example that the tool prove-in of a die used to produce escapement plates with 9-hole patterns consisted of analyzing measurement data on 15 production parts. This analysis involves computation of averages and standard deviations of corresponding measurement data obtained over this sampling of parts after each individual data set has been subjected to the best fit mathematical procedure. The results of this analysis reveal the following:

1. the average values for feature locations accurately reflect any errors involved in the locations of features in the die as fabricated by the jig borer, thus eliminating the need for direct inspection of the tooling; and

2. the averages and their corresponding standard deviations together provide the necessary information with which to evaluate the conformance of the production parts, thus supplanting the inspection by gages and eliminating their need entirely.

Findings Derived Through Trial Applications of COCOM

COCOM has been applied to a variety of piece part and subassembly configurations; for example, mounting plates and housings for gear trains, timing mechanisms, and snap action mechanisms; escapement wheels and pallets; driving and holding pawls; cams and cam followers; rotating and stationary printed circuit boards for switching mechanisms; art work and matching hole patterns in printed wiring board panels before and after etching; and mating parts of electrical connectors.

These items of product were fabricated by a wide range of processing methods such as machining, blanking, and molding. Many items of product were defined with regard to current dimensioning and tolerancing practices and then fabricated and inspected accordingly. This situation not only provided an opportunity to evaluate COCOM over a wide band of product configurations and methodology but also afforded many opportunities to compare the results of this method to those obtained in current practices.

The nature of these applications and general descriptions of the findings that were derived are as follows.

1. Reappraisals of rejected material that had been defined, manufactured, and inspected according to current practices

   Before reappraising material of this kind, it was necessary that the feature locations and contours be redefined in accordance with the COCOM approach.

   In the majority of these cases, the ensuing reappraisals resulted in the acceptance of products formerly rejected. In the remaining cases, these reappraisals invariably revealed specific processing deficiencies that came into sharp focus when the inspection data were transposed to the best fit coordinate system by the COCOM approach. Had COCOM been followed at first piece inspection, these deficiencies would have been detected and corrected at that stage of production. The nonconformance in the production lots associated with locations of features and contours could thereby have been entirely precluded.

2. Process capability studies on feature positioning and contour profiling processes

   Process capability studies performed by COCOM revealed that all feature positioning and contour profiling processses were substantially more accurate and precise than indicated by corresponding analyses of measurements referenced from datum features, plane intersections, and/or plane surfaces.

The process spread determined through analyzing measurement data from datum features and contours was never less than 1.5 times that obtained through analyzing raw measurement data by COCOM. In fact, these ratios frequently exceeded 10 or more.

These results thoroughly affirm that the biases and variabilities observed as a result of present process capability study practices are largely a function of current design definition, manufacturing, and inspection practices rather than of the inaccuracy and imprecision of the manufacturing processes.

Process capability studies made by the COCOM approach were also performed with a view to forecasting performance for anticipated production. As verified in later production, these studies were found to be much more reliable indicators of production performance than corresponding studies performed in accordance with current practices. In addition, these studies frequently revealed cost savings that resulted from the selection of more economical processing methods than those initially under consideration.

3. Precision and accuracy studies on coordinate measuring machines

Precision and accuracy studies were conducted on coordinate measuring machines in a manner similar to the capability studies conducted on manufacturing processes. In these studies, the precision and accuracy estimates were computed on the basis of data obtained from repeated measurements of both production parts and precisely fabricated test specimens. In the cases of the test specimens, the initial calibration values were obtained in the context of COCOM through an iterative application of COCOMP to the raw measurement data.

In general, the relative superiority in precision and accuracy of measuring equipment that was determined from the data

by the COCOM approach was similar to that found in production processes. A typical demonstration of this relative superiority was obtained in reanalyzing inspection data from a prior error-of-measurement study (see Reference 5). This study had been made on a 6- x 9- x 3/4-in. test plate with an asymmetrical pattern of ten holes. The study involved three Moore measuring machines; three inspectors took measurements at three different depths in each hole. The initial pooled standard deviation estimate in the X and Y axes (based on measurements taken with reference to the datum-datum orient defined on the test plate) was computed to be 0.000035. Reanalysis of these same measurements (based on the application of COCOM) resulted in a corresponding estimate of 0.000015. In addition, this reanalysis of all of the inspection data revealed an initial calibration error in the datum feature of 0.000035.

The findings derived through these trial applications amply support a conclusion that substantial increases in productivity and cost savings would result from the application of COCOM in a total production system.

4. Implementation

The applications described above provided several lessons about implementation of COCOM. For example, if COCOM is used in a scheduled manufacturing process, an on-the-floor computing facility is necessary to keep the turnaround time to a minimum. Otherwise, parts sit on the coordinate measuring machine waiting for the results of the best-fit computation. The inspector may feel degraded since the computer seems to be performing the accept-reject function. Finally, if applied in a formal production system, the legal paper has to change. The drawings, accept-reject criteria, etc., have to be redefined.

All of these "problems" will have to be solved anyway when the whole design-production-inspection process is computerized,

so full efficient implementation of COCOM may not occur until this step is accomplished.

References

1. E. L. Frost, Description of the Computer Program COCOMP, SAND79-0028, Sandia Laboratories, Albuquerque, NM, to be published.

2. J. P. Shoup, PARDI, a Program Developed at Sandia Laboratories Which Performs a Closed-Form, One-Pass, Least Squares Transformation, Sandia Laboratories, Albuquerque, NM, to be published.

3. W. J. Halpin, Details of the Mathematics Associated with COCOM and COCOMP, SAND77-1316, Sandia Laboratories, Albuquerque, NM, March 1978.

4. L. F. Shampine, A Routine of Unconstrained Optimization, SC-TM-72-0130, Sandia Laboratories, Albuquerque, NM, 1972 (SIMMIN).

5. Lynn V. Rigby and David A. Edelman, An Analysis of Human Variability in Mechanical Inspection, SC-RR-68-282, Sandia Laboratories, Albuquerque, NM, May 1968.

DISTRIBUTION:

Bendix Corp. (4)
P. O. Box 1159
Kansas City, MO 64141
Attn: J. O. Christy - 2B28
L. K. Gillespie - 2A36
G. C. Hynes - MC45
J. P. Dykus - 2A36

1220 J. M. Wiesen
1221 W. E. Boyes (20)
1221 A. M. Roybal
1222 G. T. Merren
1410 W. C. Kraft
2320 K. L. Gillespie
2420 R. W. Devore
2424 G. Carli
2458 P. A. Nicovich
8266 E. A. Aas
3141 T. L. Werner (5)
3151 W. L. Garner (3)
For DOE/TIC (Unlimited Release)
DOE/TIC (25)
(R. P. Campbell, 3172-3)