SAND76-0266

Unlimited Release

Equations of Motion for Free-Flight Systems of Rotating-Translating Bodies

Albert E. Hodapp, Jr.

Prepared by Sandia Laboratories, Albuquerque New Mexico 87115 and Livermore, California 94550 for the United States Energy Research and Development Administration under Contract AT-(29-1)-789

Printed September 1976

When printing a copy of any digitized SAND Report, you are required to update the markings to current standards.

Issued by Sandia Laboratories, operated for the United States Energy Research & Development Administration by Sandia Corporation.

NOTICE

This report was prepared as an account of work sponsored by the United States Government. Neither the United States nor the United States Energy Research & Development Administration, nor any of their employees, nor any of their contractors, subcontractors, or their employees, makes any warranty, express or implied, or assumes any legal liability or responsibility for the accuracy, completeness or usefulness of any information, apparatus, product or process disclosed, or represents that its use would not infringe privately owned rights.

SF 1004-DF (3-78)

SAND76-0266
Unlimited Release
Printed September 1976

EQUATIONS OF MOTION FOR FREE-FLIGHT SYSTEMS OF ROTATING-TRANSLATING BODIES

Albert E. Hodapp, Jr.
Aeroballistics Division 1331
Sandia Laboratories
Albuquerque, New Mexico 87115

ABSTRACT

General vector differential equations of motion are developed for a system of rotating-translating, unbalanced, constant mass bodies. Complete flexibility is provided in placement of the reference coordinates within the system of bodies and in placement of body fixed axes within each body. Example cases are presented to demonstrate the ease in reduction of these equations to the equations of motion for systems of interest.

Printed in the United States of America

Available from
National Technical Information Service
U. S. Department of Commerce
5285 Port Royal Road
Springfield, Virginia 22151
Price: Printed Copy $4.50; Microfiche $2.25

Summary

A set of general vector differential equations is developed, relative to arbitrarily placed reference axes, for a system of unbalanced, constant mass bodies. The bodies can rotate and translate relative to each other as well as relative to the reference coordinates. Because of the complete flexibility in placement of both the body fixed coordinates and the reference coordinates, these general equations are more useful than those developed previously for multiple body free-flight systems. Utilizing restraints and exploiting the flexibility in placement of coordinate systems, these general equations are easily reduced to the equations of motion for many dynamic systems of interest. Two example cases are presented to demonstrate the ease of application and general utility of these equations.

CONTENTS

	Page
Summary	4
Nomenclature	7
Introduction	9
Theoretical Analysis	9
Particle Dynamics	10
jth Body Dynamics	11
System Dynamics	13
Example Cases	13
Spinning Asymmetrical Body	14
Internal Vibrating Member	16
Conclusion	19
References	23

FIGURES

Figure		Page
1	Coordinate Systems	20
2	Spinning Asymmetrical Body	21
3	Internal Vibrating Member	22

Nomenclature

cg	Center of gravity
$\frac{d()}{dt}$	Derivative of ( ) with respect to time
F	Total force (external + gravitational) acting on system of bodies $\left[\sum_j F_j\right]$, lb or N
F_j	Total force (external + gravitational + interaction) acting on jth body $\left[\sum_p F_{jp}\right]$, lb or N
F_{jp}	Total force (external + gravitational + interaction) acting on particle "p" of the jth body [Eq. (1)], lb or N
F_X, F_Y, F_Z	Components of total external force along the X, Y, Z axes, respectively, lb or N
g_X, g_Y, g_Z	Components of gravitational acceleration along the X, Y, Z axes, respectively, ft/sec^2 or m/sec^2
H_j	Moment of momentum of jth body about the origin of $X_jY_jZ_j$ [Eq. (10)], ft-lb-sec or N-m-sec
$I_{X_j}, I_{Y_j}, I_{Z_j}$	Moments of inertia of jth body about the X_j, Y_j, Z_j axes, respectively, slug-ft^2 or kg-m^2
$J_{X_jY_j}, J_{Y_jZ_j}, J_{X_jZ_j}$	Products of inertia of the jth body relative to the $X_jY_jZ_j$ axes, slug-ft^2 or kg-m^2
m	Total system mass [Eq. (17)], slug or kg
m_j	Mass of jth body [Eq. (6)], slug or kg
m_{jp}	Mass of particle "p" in jth body, slug or kg
M_o, M_{j_o}, M_{jp}	Moments of the forces F, F_j, F_{jp}, respectively, about "o" (origin of XYZ axes), ft-lb or N-m
M_X, M_Y, M_Z	Components of the moment of external forces about "o" (origin of XYZ axes) relative to the X, Y, Z axes, respectively, ft-lb or N-m
r_{cg}	Radius vector from "o" (origin of XYZ axes) to the cg of the system of bodies, Figure 1, ft or m
r_j	Radius vector from "o" (origin of XYZ axes) to the origin of the $X_jY_jZ_j$ axes, Figure 1, ft or m

Nomenclature
(cont)

R_{jp}	Radius vector from origin of $X_iY_iZ_i$ axes to particle "p" in the jth body, Figure 1, ft or m
R_o	Radius vector from origin of $X_iY_iZ_i$ axes to "o" (origin of XYZ axes), Figure 1, ft or m
t	Time, sec
V	Velocity of "o" (origin of XYZ axes) relative to inertial space, ft/sec or m/sec
XYZ	Reference coordinates for system of bodies (arbitrary location), Figure 1
$X_iY_iZ_i$	Inertially fixed coordinates, Figure 1
$X_jY_jZ_j$	Coordinates fixed in jth body (arbitrary location in body), Figure 1
ρ_{jcg}	Radius vector from origin of $X_jY_jZ_j$ axes to the cg of the jth body, Figure 1, ft or m
ρ_{jp}	Radius vector from origin of $X_jY_jZ_j$ axes to the particle "p" in the jth body, Figure 1
ω_j	Angular velocity of the jth body, rad/sec
Ω	Angular velocity of the reference XYZ axes, rad/sec
$(\bar{\ })$, $(\vec{\ })$, $(\hat{\ })$	Denotes vectors resolved relative to the $X_iY_iZ_i$, XYZ, and $X_jY_jZ_j$ axes, respectively
$(\dot{\ })$, $(\ddot{\ })$	First and second derivatives with respect to time
$\sum_p, \sum_j$	Summations for all particles "p" of the jth body, and for all j bodies of the system, respectively.

EQUATIONS OF MOTION FOR FREE-FLIGHT SYSTEMS OF ROTATING-TRANSLATING BODIES

Introduction

Often when dealing with the flight dynamics and control problems associated with aircraft, missiles, reentry vehicles, spacecraft, bombs, and shells the need arises for describing the motion of systems of bodies rather than the motion of single bodies for which the equations are well defined.[1, 2] Examples of dynamic multiple body systems are aircraft, missiles, etc., with moving control surfaces and/or with moving internal components. Vector differential equations are developed herein which describe the motion of a system of rotating-translating, constant mass bodies. The angular velocities of the individual bodies and the angular velocity of the reference coordinate system are all assumed to differ. These general equations of motion differ from previous developments, notably Reference 3, in that the axis system in each body is not fixed at the cg, and the reference coordinate frame for the system is not fixed in any body. This flexibility in placement of the reference coordinate system and each of the body fixed coordinate systems can be of great advantage in simplifying the equations for specific applications. For example, the requirement for nonrolling reference axes is easily implemented, as is the simulation of unbalanced bodies.

By introducing restraints (e. g., limiting the number of bodies, limiting their degrees of freedom, defining the dynamic coupling of the bodies, etc.), the general equations presented herein can be reduced in form to describe the equations of motion for many multiple body or single body dynamic systems of interest. To demonstrate the flexibility and usefulness of these equations, two simplified example cases are considered. For the first, equations of motion for a spinning body with mass asymmetries are developed relative to nonrolling coordinates. The second example involves the development of equations of motion for a spinning body with an internal flexible-vibrating member. The equations resulting from these example cases are useful for describing the free-flight motions of both aerodynamically stabilized and gyroscopically stabilized spinning vehicles.

Theoretical Analysis

In Figure 1 the positions of the j rigid bodies (j = 1, 2, ..., n), which make up the system of interest, are described relative to both inertial space ($X_iY_iZ_i$) and the reference coordinate system (XYZ). The center of mass or center of gravity (cg) for the system of bodies is not required to be coincident with the origin "o" of the reference coordinates. These bodies translate and rotate relative to one another as well as relative to the rotating reference frame (XYZ). The body fixed

coordinate system $X_jY_jZ_j$ can be located arbitrarily in the jth body. As shown in Figure 1, the j bodies can have cg offsets.

For the following development, the symbol appearing above a vector quantity denotes the coordinate frame that the vector is resolved relative to and also the coordinate frame that derivatives of the vector are taken with respect to. Examples are r_j and $\dot{\bar{r}}_j$, $\vec{r}_j$ and $\dot{\vec{r}}_j$, or $\hat{r}_j$ and $\dot{\hat{r}}_j$. These respective groups indicate vectors resolved relative to, and derivatives taken with respect to, the $X_iY_iZ_i$ inertial coordinates, the XYZ reference coordinates, and the $X_jY_jZ_j$ body fixed coordinates.

Particle Dynamics

The force acting on the constant mass particle "p" (part of the jth body, Figure 1) and the moment of that force about the origin "o" of the reference XYZ coordinate frame are given as

$$\bar{F}_{jp} = m_{jp}\ddot{\bar{R}}_{jp} \tag{1}$$

$$\bar{M}_{jp_o} = (\bar{r}_j + \bar{\rho}_{jp})X\bar{F}_{jp} \ . \tag{2}$$

The radius vector from the origin of the inertial reference system $(X_iY_iZ_i)$ to the particle "p" of the jth body (Figure 1) can be written as

$$\bar{R}_{jp} = \bar{R}_o + \bar{r}_j + \bar{\rho}_{jp} \ . \tag{3}$$

Differentiating Eq. (3) and substituting it into Eq. (1),

$$\bar{F}_{jp} = m_{jp}(\ddot{\bar{R}}_o + \ddot{\bar{r}}_j + \ddot{\bar{\rho}}_{jp}) \ . \tag{4}$$

Since the jth body is rigid (no relative motion of particles) the magnitude of $\bar{\rho}_{jp}$ is a constant; however, the derivatives of $\bar{\rho}_{jp}$ are nonzero because its direction is variable.

Substituting Eq. (4) into Eq. (2),

$$\bar{M}_{jp_o} = (\bar{r}_j + \bar{\rho}_{jp})Xm_{jp}(\ddot{\bar{R}}_o + \ddot{\bar{r}}_j + \ddot{\bar{\rho}}_{jp}) \ .$$

Recalling that

$$\frac{d}{dt}\left\{(\bar{r}_j + \bar{\rho}_{jp})X(\dot{\bar{r}}_j + \dot{\bar{\rho}}_{jp})\right\} = (\bar{r}_j + \bar{\rho}_{jp})X(\ddot{\bar{r}}_j + \ddot{\bar{\rho}}_{jp}) \ ,$$

the previous equation can be written as

$$\bar{M}_{jp_o} = \frac{d}{dt}\left\{\left(\bar{r}_j + \rho_{jp}\right)Xm_{jp}\left(\dot{\bar{r}}_j + \dot{\bar{\rho}}_{jp}\right)\right\} + \left(\bar{r}_j + \bar{\rho}_{jp}\right)Xm_{jp}\ddot{\bar{R}}_o \ . \tag{5}$$

<u>jth Body Dynamics</u>

Summing for all of the particles "p" of the jth body, the mass of the body is obtained as

$$\sum_p m_{jp} = m_j \ . \tag{6}$$

Since the jth body is rigid and its center of gravity (cg) is displaced from the origin of the $X_jY_jZ_j$ system, summing mass moments about the origin yields

$$\sum_p m_{jp}\bar{\rho}_{jp} = m_j\bar{\rho}_{jcg} \ . \tag{7}$$

The force acting on the jth body and the moment of that force about "o" are obtained by summing Eqs. (4) and (5) for all particles "p" of the jth body.

$$\bar{F}_j = \sum_p \bar{F}_{jp} = \left(\sum_p m_{jp}\right)\left(\ddot{\bar{R}}_o + \ddot{\bar{r}}_j\right) + \sum_p m_{jp}\ddot{\bar{\rho}}_{jp}$$

$$\bar{M}_{j_o} = \sum_p \bar{M}_{jp_o} = \frac{d}{dt}\left\{\left(\sum_p m_{jp}\right)\bar{r}_jX\dot{\bar{r}}_j + \bar{r}_jX\left(\sum_p m_{jp}\dot{\bar{\rho}}_{jp}\right)\right.$$

$$\left. + \left(\sum_p m_{jp}\bar{\rho}_{jp}\right)X\dot{\bar{r}}_j + \sum_p\left(\bar{\rho}_{jp}X\dot{\bar{\rho}}_{jp}m_{jp}\right)\right\} + \left(\sum_p m_{jp}\right)r_jX\ddot{\bar{R}}_o$$

$$+ \left(\sum_p m_{jp}\rho_{jp}\right)X\ddot{\bar{R}}_o \ .$$

Substituting Eq. (6) along with Eq. (7) and its derivatives into the above equations, the force and moment reduce to

$$\bar{F}_j = m_j\left(\ddot{\bar{R}}_o + \ddot{\bar{r}}_j\right) + m_j\ddot{\bar{\rho}}_{jcg} \tag{8}$$

$$\bar{M}_{j_o} = \dot{\bar{H}}_j + m_j\left(\bar{r}_j + \bar{\rho}_{jcg}\right)X\ddot{\bar{r}}_j + \bar{r}_jXm_j\ddot{\bar{\rho}}_{jcg} + m_j\left(\bar{r}_j + \bar{\rho}_{jcg}\right)X\ddot{\bar{R}}_o \tag{9}$$

where the moment of momentum of the jth body about the origin of the $X_jY_jZ_j$ coordinate system $\bar{H}_j$ is defined as

$$\bar{H}_j = \sum_p\left(\bar{\rho}_{jp}X\dot{\bar{\rho}}_{jp}m_{jp}\right) = \int_{\text{jth body}}\bar{\rho}_{jp}X\dot{\bar{\rho}}_{jp}dm \ . \tag{10}$$

As shown later, $\overline{H}_j$ is defined in terms of the moments and products of inertia of the jth body. Because it is natural to measure these quantities together with the cg offset ($\overline{\rho}_{jcg}$) relative to a coordinate system fixed in the jth body, it is assumed that $\overline{H}_j$ and $\overline{\rho}_{jcg}$ will both be initially determined as vectors resolved relative to the $X_jY_jZ_j$ coordinates; i.e., as $\hat{H}_j$ and $\hat{\rho}_{jcg}$. In order to resolve these vector quantities relative to the reference coordinates, it then becomes necessary to establish coordinate transformations between the $X_jY_jZ_j$ systems and the XYZ reference system.

Assuming that all vectors have been resolved relative to the XYZ reference coordinates,

$$\dot{\overline{H}}_j = \dot{\vec{H}}_j + \vec{\Omega}\times\vec{H}_j$$

$$\dot{\overline{r}}_j = \dot{\vec{r}}_j + \vec{\Omega}\times\vec{r}_j \tag{11}$$

$$\ddot{\overline{r}}_j = \ddot{\vec{r}}_j + \dot{\vec{\Omega}}\times\vec{r}_j + 2\vec{\Omega}\times\dot{\vec{r}}_j + \vec{\Omega}\times\left(\vec{\Omega}\times\vec{r}_j\right) \tag{12}$$

$$\ddot{\overline{\rho}}_{jcg} = \ddot{\vec{\rho}}_{jcg} + \dot{\vec{\Omega}}\times\vec{\rho}_{jcg} + 2\vec{\Omega}\times\dot{\vec{\rho}}_{jcg} + \vec{\Omega}\times\left(\vec{\Omega}\times\vec{\rho}_{jcg}\right) \tag{13}$$

$$\dot{\overline{R}}_o = \overline{V} .$$

Resolving the velocity $\overline{V}$ (velocity of "o") relative to the XYZ reference coordinate directions,

$$\ddot{\overline{R}}_o = \dot{\vec{V}} + \vec{\Omega}\times\vec{V} \tag{14}$$

where $\vec{\Omega}$ (Figure 1) is the angular velocity of the XYZ reference system.

Transforming $\overline{F}_j$ and $\overline{M}_{j_o}$ and substituting Eqs. (11) through (14) into Eqs. (8) and (9),

$$\begin{aligned}\overline{F}_j = m_j\Big\{&\left(\ddot{\vec{r}}_j + \ddot{\vec{\rho}}_{jcg}\right) + \dot{\vec{\Omega}}\times\left(\vec{r}_j + \vec{\rho}_{jcg}\right) + 2\vec{\Omega}\times\left(\dot{\vec{r}}_j + \dot{\vec{\rho}}_{jcg}\right)\\ &+ \vec{\Omega}\times\left[\vec{\Omega}\times\left(\vec{r}_j + \vec{\rho}_{jcg}\right)\right] + \left(\dot{\vec{V}} + \vec{\Omega}\times\vec{V}\right)\Big\} .\end{aligned} \tag{15}$$

$$\begin{aligned}\overline{M}_{j_o} = {}& \dot{\vec{H}}_j + \vec{\Omega}\times\vec{H}_j + m_j\left(\vec{r}_j + \vec{\rho}_{jcg}\right)\times\left(\dot{\vec{V}} + \vec{\Omega}\times\vec{V}\right)\\ &+ m_j\left(\vec{r}_j + \vec{\rho}_{jcg}\right)\times\left[\ddot{\vec{r}}_j + \dot{\vec{\Omega}}\times\vec{r}_j + 2\vec{\Omega}\times\dot{\vec{r}}_j + \vec{\Omega}\times\left(\vec{\Omega}\times\vec{r}_j\right)\right]\\ &+ m_j\vec{r}_j\times\left[\ddot{\vec{\rho}}_{jcg} + \dot{\vec{\Omega}}\times\vec{\rho}_{jcg} + 2\vec{\Omega}\times\dot{\vec{\rho}}_{jcg} + \vec{\Omega}\times\left(\vec{\Omega}\times\vec{\rho}_{jcg}\right)\right] .\end{aligned} \tag{16}$$

System Dynamics

The total mass of the system and the cg location for the system relative to the origin "o" of the reference coordinates (Figure 1) are obtained by summing the masses of the j bodies and their mass moments about "o" as follows,

$$\sum_j m_j = m \tag{17}$$

$$\sum_j m_j\left(\vec{r}_j + \vec{\rho}_{jcg}\right) = m\vec{r}_{cg} \ . \tag{18}$$

The total force acting on the system and the moment of that force about "o" are obtained by summing Eqs. (15) and (16) for all j bodies and using Eq. (17) together with Eq. (18) and its derivatives.

$$\vec{F} = \sum_j \vec{F}_j = m\left[\dot{\vec{V}} + \vec{\Omega}\mathrm{X}\vec{V} + \ddot{\vec{r}}_{cg} + \dot{\vec{\Omega}}\mathrm{X}\vec{r}_{cg} + 2\vec{\Omega}\mathrm{X}\dot{\vec{r}}_{cg} + \vec{\Omega}\mathrm{X}\left(\Omega\mathrm{X}\vec{r}_{cg}\right)\right] . \tag{19}$$

$$\begin{aligned}
\vec{M}_o = \sum_j \vec{M}_{jo} = {} & \sum_j \dot{\vec{H}}_j + \vec{\Omega}\mathrm{X}\left(\sum_j \vec{H}_j\right) + m\vec{r}_{cg}\mathrm{X}\left(\dot{\vec{V}} + \vec{\Omega}\mathrm{X}\vec{V}\right) + \sum_j m_j\left(\vec{r}_j + \vec{\rho}_{jcg}\right)\mathrm{X}\ddot{\vec{r}}_j \\
& + \sum_j m_j\left(\vec{r}_j + \vec{\rho}_{jcg}\right)\mathrm{X}\left(\dot{\vec{\Omega}}\mathrm{X}\vec{r}_j\right) + 2\sum_j m_j\left(\vec{r}_j + \vec{\rho}_{jcg}\right)\mathrm{X}\left(\vec{\Omega}\mathrm{X}\dot{\vec{r}}_{cg}\right) \\
& + \sum_j m_j\left(\vec{r}_j + \vec{\rho}_{jcg}\right)\mathrm{X}\left[\vec{\Omega}\mathrm{X}\left(\vec{\Omega}\mathrm{X}\vec{r}_j\right)\right] + \sum_j m_j\vec{r}_j\mathrm{X}\ddot{\vec{\rho}}_{jcg} + \sum m_j\vec{r}_j\mathrm{X}\left(\dot{\vec{\Omega}}\mathrm{X}\vec{\rho}_{jcg}\right) \\
& + 2\sum_j m_j\vec{r}_j\mathrm{X}\left(\vec{\Omega}\mathrm{X}\dot{\vec{\rho}}_{jcg}\right) + \sum_j m_j\vec{r}_j\mathrm{X}\left[\vec{\Omega}\mathrm{X}\left(\vec{\Omega}\mathrm{X}\vec{\rho}_{jcg}\right)\right] .
\end{aligned} \tag{20}$$

Motions of the j individual bodies are described by Eqs. (15 and (16), while Eqs. (19) and (20) describe the motion of the system of bodies. The forces and moments acting on the j individual bodies include those resulting from interaction of bodies, external forces, and body forces. Forces and moments resulting from body interactions occur in equal but opposite pairs; therefore, in the summation to obtain Eqs. (19) and (20) these pairs cancel, leaving only the summations of the external forces and moments and body forces and moments which are represented by $\vec{F}$ and $\vec{M}_o$.

Example Cases

In order to demonstrate the usefulness of these general equations of motion, two examples will be given. For the first example, equations of motion will be developed relative to nonrolling coordinates (aeroballistic axes) for a single spinning body having mass asymmetries (principal axis misalignment and center of gravity offset). The equations of motion for a spinning body containing an internal vibrating member (multiple body problem) will be developed as the second example. As mentioned

earlier, the equations developed for these example cases are useful for describing the free-flight motions of both aerodynamically stabilized and gyroscopically stabilized spinning vehicles.

Spinning Asymmetrical Body

The single rigid body considered here (Figure 2) is not required to have an axis of mass or aerodynamic symmetry. For this example, the $X_1Y_1Z_1$ body fixed axis system (Figure 2) has its origin fixed at the cg of the body ($\hat{\rho}_{1cg} = 0$). The XYZ nonrolling reference coordinate system (Figure 2) is placed in the body such that its X axis is directed out the nose and its origin is offset laterally from the cg $\hat{r}_1 = (o, y_{cg}, z_{cg})$. The X_1 and X axes remain parallel while the positions of Y_1 relative to Y and Z_1 relative to Z are described by the roll angle ϕ. Therefore, the reference system pitches and yaws with the vehicle but does not roll with it. For a single body with the arrangement of axis systems shown in Figure 2, Eqs. (19) and (20) reduce to

$$\vec{F} = m\left[\dot{\vec{V}} + \vec{\Omega}X\vec{V} + \ddot{\vec{r}}_1 + \dot{\vec{\Omega}}X\vec{r}_1 + 2\vec{\Omega}X\dot{\vec{r}}_1 + \vec{\Omega}X\left(\vec{\Omega}X\vec{r}_1\right)\right] \tag{21}$$

$$\vec{M}_o = \dot{\vec{H}}_1 + \vec{\Omega}X\vec{H}_1 + \vec{r}_1X\vec{F} \ . \tag{22}$$

Of the available options, the arrangement of coordinate systems shown in Figure 2 was chosen because the resulting vector equations require fewer algebraic manipulations to reduce them to scalar differential equation form. This approach does require that the moments and products of inertia be obtained relative to the offset $X_1Y_1Z_1$ axis system; however, because of the simplicity of the transfer equations, this is not a disadvantage.

With the exception of $\vec{H}_1$, the vector quantities contained in Eqs. (21) and (22) are defined in terms of their components relative to the XYZ nonrolling reference system as

$$\vec{F} = \left(F_X + mg_X,\ F_Y + mg_Y,\ F_Z + mg_Z\right) \tag{23}$$

$$\vec{M}_o = \left(M_X + myg_Z - mzg_Y,\ M_y + mzg_X,\ M_Z - myg_X\right) \tag{24}$$

$$\vec{r}_1 = \left(x,\ y,\ z\right) = \left[0,\ \left(y_{cg}\cos\phi - z_{cg}\sin\phi\right),\ \left(y_{cg}\sin\phi + z_{cg}\cos\phi\right)\right] \tag{25}$$

$$\vec{V} = \left(\tilde{u},\ \tilde{v},\ \tilde{w}\right) \tag{26}$$

$$\vec{\Omega} = \left(\tilde{p},\ \tilde{q},\ \tilde{r}\right) = \left[\left(p - \dot{\phi}\right),\ \left(q\cos\phi - r\sin\phi\right),\ \left(q\sin\phi + r\cos\phi\right)\right] \tag{27}$$

where p, q, r are the components of angular velocity relative to the body fixed $X_1Y_1Z_1$ axis system,

$$\hat{\omega}_1 = \left(p,\ q,\ r\right) \ . \tag{28}$$

The mass properties that define the moment of momentum vector are measured relative to the $X_1Y_1Z_1$ body fixed coordinate system. Therefore, $\hat{H}_1$ must be evaluated in order to obtain $\vec{H}_1$. Recalling that $\hat{\rho}_{1p}$ is a constant relative to the body fixed coordinates,

$$\dot{\hat{\rho}}_{1p} = \hat{\omega}_1 X \hat{\rho}_{1p} \ . \tag{29}$$

Substituting Eq. (29) into Eq. (10) and integrating over the body (see Ref. 4),

$$\begin{aligned}\hat{H}_1 = \Big[&\left(I_{X_1} p - J_{X_1Y_1} q - J_{X_1Z_1} r\right), \left(-J_{X_1Y_1} p + I_{Y_1} q - J_{Y_1Z_1} r\right), \\ &\left(-J_{X_1Z_1} p - J_{Y_1Z_1} q + I_{Z_1} r\right)\Big] \ .\end{aligned} \tag{30}$$

Transforming $\hat{H}_1$ from the $X_1Y_1Z_1$ system to the XYZ nonrolling system,

$$\begin{aligned}\vec{H}_1 = \Big\{&\left[I_{X_1} p - J_{X_1Y_1} q - J_{X_1Z_1} r\right], \Big[\left(-J_{X_1Y_1} p + I_{Y_1} q - J_{Y_1Z_1} r\right) \cos\phi \\ &-\left(-J_{X_1Z_1} p - J_{Y_1Z_1} q + I_{Z_1} r\right) \sin\phi\Big], \Big[\left(-J_{X_1Z_1} p - J_{Y_1Z_1} q + I_{Z_1} r\right) \cos\phi \\ &+ \left(-J_{X_1Y_1} p + I_{Y_1} q - J_{Y_1Z_1} r\right) \sin\phi\Big]\Big\} \ .\end{aligned} \tag{31}$$

Substituting Eqs. (23) through (27) and Eq. (31) into Eqs. (21) and (22), the vector equations reduce to

$$F_X + mg_X = m\left\{\dot{\tilde{u}} + \tilde{q}\tilde{w} - \tilde{r}\tilde{v} - y_{cg}\left(\dot{r} - qp\right) + z_{cg}\left(\dot{q} + rp\right)\right\} \tag{32}$$

$$F_Y + mg_Y = m\left\{\dot{\tilde{v}} + \tilde{r}\tilde{u} - \tilde{p}\tilde{w} - z\left(\dot{p} - \tilde{q}\tilde{r}\right) - y\left(p^2 + \tilde{r}^2\right)\right\} \tag{33}$$

$$F_Z + mg_Z = m\left\{\dot{\tilde{w}} + \tilde{p}\tilde{v} - \tilde{q}\tilde{u} + y\left(\dot{p} + \tilde{q}\tilde{r}\right) - z\left(p^2 + \tilde{q}^2\right)\right\} \tag{34}$$

$$M_X = I_{X_1}\dot{p} + \left(I_{Z_1} - I_{Y_1}\right)qr - J_{X_1Y_1}\left(\dot{q} - pr\right) - J_{X_1Z_1}\left(\dot{r} + pq\right) + J_{Y_1Z_1}\left(r^2 - q^2\right) + F_Z y - F_Y z \tag{35}$$

$$\begin{aligned}M_Y = {} & I_{Y_1}\dot{q}\cos\phi - I_{Z_1}\dot{r}\sin\phi - p\left(I_{Y_1} q \sin\phi + I_Z r \cos\phi\right) + I_{X_1} p\tilde{r} \\ & - J_{X_1Y_1}\left(\dot{p} + qr\right)\cos\phi + J_{X_1Y_1}\left(p^2 - q^2\right)\sin\phi + J_{X_1Z_1}\left(\dot{p} - qr\right)\sin\phi \\ & + J_{X_1Z_1}\left(p^2 - r^2\right)\cos\phi + J_{Y_1Z_1}\left(\dot{q} + pr\right)\sin\phi - J_{Y_1Z_1}\left(\dot{r} - pq\right)\cos\phi + F_X z\end{aligned} \tag{36}$$

$$M_Z = I_{Z_1}\dot{r}\cos\phi + I_{Y_1}\dot{q}\sin\phi + p\left(I_{Y_1}q\cos\phi - I_{Z_1}r\sin\phi\right) - I_{X_1}p\,\tilde{q}$$

$$- J_{X_1Y_1}\left(\dot{p} + qr\right)\sin\phi - J_{X_1Y_1}\left(p^2 - q^2\right)\cos\phi - J_{X_1Z_1}\left(\dot{p} - qr\right)\cos\phi \tag{37}$$

$$+ J_{X_1Z_1}\left(p^2 - r^2\right)\sin\phi - J_{Y_1Z_1}\left(\dot{q} + pr\right)\cos\phi - J_{Y_1Z_1}\left(\dot{r} - pq\right)\sin\phi - F_X y \,.$$

Possibly the most classic of the many applications of equations of this type (relative to nonrolling coordinates) is in the description of artillery shell motion. The presence of products of inertia, cg offsets, and unequal lateral moments of inertia in Eqs. (32) through (37) make them different from the equations of motion relative to nonrolling coordinates often found in the literature. These additional terms can have important effects on the flight dynamic behavior of all flight vehicles.

Internal Vibrating Member

The two body system considered herein consists of an outer rigid body (Body 1, Figure 3) that has a small rigid body (Body 2, Figure 3) suspended within it by massless springs. Motion of Body 2 is constrained to translation in a plane parallel to the Y_1Z_1-plane; i.e., it can only move laterally. The motion of Body 1 is unrestrained. The $X_1Y_1Z_1$ body fixed axes (Body 1, Figure 3) and the XYZ reference system are coincident, with their origins fixed at the cg of Body 1. These systems and the $X_2Y_2Z_2$ system remain mutually parallel; therefore, both bodies have identical angular velocity. The $X_2Y_2Z_2$ system has its origin placed at the cg of Body 2 (Figure 3). As a result of the constraints imposed and the placement of coordinate systems, $\vec{\rho}_{1cg} = \vec{\rho}_{2cg} = \vec{r}_1 = 0$.

The vector equations which describe the motion of this system, Eqs. (15), (18), (19), and (20), then reduce to

$$\vec{F}_2 = m_2\left[\dot{\vec{V}} + \vec{\Omega}\times\vec{V} + \ddot{\vec{r}}_2 + \dot{\vec{\Omega}}\times\vec{r}_2 + 2\vec{\Omega}\times\dot{\vec{r}}_2 + \vec{\Omega}\times\left(\vec{\Omega}\times\vec{r}_2\right)\right] \tag{38}$$

$$m_2\vec{r}_2 = m\vec{r}_{cg} \tag{39}$$

$$\vec{F} - \vec{F}_2 = m_1\left[\dot{\vec{V}} + \vec{\Omega}\times\vec{V}\right]$$

$$\vec{M}_o = \dot{\vec{H}}_1 + \dot{\vec{H}}_2 + \vec{\Omega}\times\left(\vec{H}_1 + \vec{H}_2\right) + \vec{r}_2\times\vec{F}_2 \tag{41}$$

where from Eq. (17), $m = m_1 + m_2$.

Like the previous example, the mass properties that define the moment of momentum of the bodies will be given relative to the $X_jY_jZ_j$ (j = 1, 2) body fixed coordinate systems. Therefore, $\hat{H}_j$ (j = 1, 2) can be obtained. Because the $X_jY_jZ_j$ systems and the XYZ reference system are mutually parallel, $\vec{H}_j = \hat{H}_j$; i.e., for this case, no angular transformation is required to obtain the moment of momentum relative to the reference coordinates. Using the development of Eq. (30) as a model, the moments of momentum for the bodies relative to the reference coordinate system XYZ are given as

$$\vec{H}_j = \left[\left(I_{X_j}p - J_{X_jY_j}q - J_{X_jZ_j}r\right), \left(-J_{X_jY_j}p + I_{Y_j}q - J_{Y_jZ_j}r\right), \left(-J_{X_jZ_j}p - J_{Y_jZ_j}q + I_{Z_j}r\right)\right] . \tag{42}$$

The remaining vector quantities contained in Eqs. (38) through (41) are defined relative to the XYZ reference system as

$$\vec{F} = \left(F_X + mg_X, F_Y + mg_Y, F_Z + mg_Z\right) \tag{43}$$

$$\vec{F}_2 = \left(F_{X_2} + m_2g_X, - Ky_2 + m_2g_Y, - Kz_2 + m_2g_Z\right) \tag{44}$$

$$\begin{aligned}\vec{M}_o = \Big[&M_X + m_2\left(y_{2_o} + y_2\right)g_Z - m_2\left(z_{2_o} + z_2\right)g_Y, M_Y - m_2x_{2_o}g_Z \\ &+ m_2\left(z_{2_o} + z_2\right)g_X, M_Z + m_2x_{2_o}g_Y - m_2\left(y_{2_o} + y_2\right)g_X\Big]\end{aligned} \tag{45}$$

$$\vec{r}_2 = \left(x_{2_o}, y_{2_o} + y_2, z_{2_o} + z_2\right) \tag{46}$$

$$\vec{V} = \left(u, v, w\right) \tag{47}$$

$$\vec{\Omega} = \left(p, q, r\right) \tag{48}$$

$$\hat{\omega}_j = \left(p, q, r\right), \quad j = 1, 2$$

where x_{2_o}, y_{2_o}, z_{2_o} (Figure 3) describe the rest (unaccelerated) position of Body 2, and K is the spring stiffness.

By combining and expanding Eqs. (38) through (48), the scalar differential equations of motion for the two-body system (Figure 3) can be written as

$$\begin{aligned}\ddot{y}_2 &- \left(y_{2_o} + y_2\right)\left(p^2 + r^2\right) + \left(1 + \frac{m_2}{m_1}\right)\frac{K}{m_2}\, y_2 - 2p\dot{z}_2 \\ &+ \left(z_{2_o} + z_2\right)\left(qr - \dot{p}\right) + x_{2_o}\left(pq + \dot{r}\right) + \frac{F_Y}{m_1} = 0\end{aligned} \tag{49}$$

$$\ddot{z}_2 - \left(z_{2_o} + z_2\right)\left(p^2 + q^2\right) + \left(1 + \frac{m_2}{m_1}\right)\frac{K}{m_2} z_2 + 2p\dot{y}_2$$

$$+ \left(y_{2_o} + y_2\right)\left(qr + \dot{p}\right) + x_{2_o}\left(pr - \dot{q}\right) + \frac{F_Z}{m_1} = 0 \tag{50}$$

$$\frac{F_X}{m} + g_X = \dot{u} + qw - rv + \frac{m_2}{m}\left[\left(z_{2_o} + z_2\right)\left(\dot{q} + rp\right)\right.$$

$$\left. + \left(y_{2_o} + y_2\right)\left(qp - \dot{r}\right) - x_{2_o}\left(q^2 + r^2\right) + 2q\dot{z}_2 - 2r\dot{y}_2\right] \tag{51}$$

$$\frac{F_Y}{m_1} + g_Y = \dot{v} + ru - pw - \frac{Ky_2}{m_1} \tag{52}$$

$$\frac{F_Z}{m_1} + g_z = \dot{w} + pv - qu - \frac{Kz_2}{m_1} \tag{53}$$

$$M_X = I_X\dot{p} + \left(I_Z - I_Y\right)qr + J_{XY}\left(pr - \dot{q}\right) + J_{XZ}\left(r^2 - q^2\right)$$

$$- J_{XZ}\left(pq + \dot{r}\right) - Kz_2\left(y_{2_o} + y_2\right) + Ky_2\left(z_{2_o} + z_2\right) \tag{54}$$

$$M_Y = \left[I_Y + \frac{m_2m_1}{m}\left(z_{2_o} + z_2\right)^2\right]\dot{q} + 2\frac{m_2m_1}{m}\left(z_{2_o} + z_2\right)\dot{z}_2q$$

$$+ \left[I_X - I_Z + \frac{m_2m_1}{m}\left(z_{2_o} + z_2\right)^2\right]pr - \frac{m_2m_1}{m} x_{2_o}\left(z_{2_o} + z_2\right)\left(q^2 + r^2\right)$$

$$- J_{XY}\left(qr + \dot{p}\right) + J_{XZ}\left(p^2 - r^2\right) + \left[J_{YZ} + \frac{m_2m_1}{m}\left(z_{2_o} + z_2\right)\left(y_{2_o} + y_2\right)\right]\left(qp - \dot{r}\right) \tag{55}$$

$$- 2\frac{m_2m_1}{m}\left(z_{2_o} + z_2\right)\dot{y}_2r + Kx_{2_o}z_2 + \frac{m_2}{m}\left(z_{2_o} + z_2\right)F_X$$

$$
\begin{aligned}
M_Z = {} & \left[I_Z + \frac{m_2 m_1}{m}\left(y_{2_o} + y_2\right)^2\right]\dot{r} + 2\,\frac{m_2 m_1}{m}\left(y_{2_o} + y_2\right)\dot{y}_2 r \\
& + \left[I_Y - I_X - \frac{m_2 m_1}{m}\left(y_{2_o} + y_2\right)^2\right]pq + \frac{m_2 m_1}{m}\,x_{2_o}\left(y_{2_o} + y_2\right)\left(q^2 + r^2\right) \\
& + J_{XZ}\left(qr - \dot{p}\right) - J_{XY}\left(p^2 - q^2\right) - \left[J_{YZ} + \frac{m_2 m_1}{m}\left(y_{2_o} + y_2\right)\left(z_{2_o} + z_2\right)\right]\left(\dot{q} + pr\right) \\
& - 2\,\frac{m_2 m_1}{m}\left(y_{2_o} + y_2\right)\dot{z}_2 q - K x_{2_o} y_2 - \frac{m_2}{m}\left(y_{2_o} + y_2\right)F_X
\end{aligned}
\tag{56}
$$

where $I_X = I_{X_1} + I_{X_2}$, $J_{XY} = J_{X_1Y_1} + J_{X_2Y_2}$, etc.

Equations (49) through (56) are useful for problems in which motion induced resonances of internal vibrating members are of concern. They are also useful for studying the effects on system motion which result from the motion of the internal components.

Conclusion

A set of general vector differential equations has been developed that describes the motion of a system of rotating-translating bodies relative to a rotating reference coordinate system. These equations allow for: (1) complete flexibility in placement of the reference frame; (2) relative rotation and translation between the reference frame and each body; (3) relative rotation and translation between the respective bodies of the system; and (4) the existence of mass asymmetries in each of the bodies. Through the use of simple restraints these general equations are easily reduced to the governing equations for many dynamic systems of interest. Two examples are given to illustrate this flexibility.

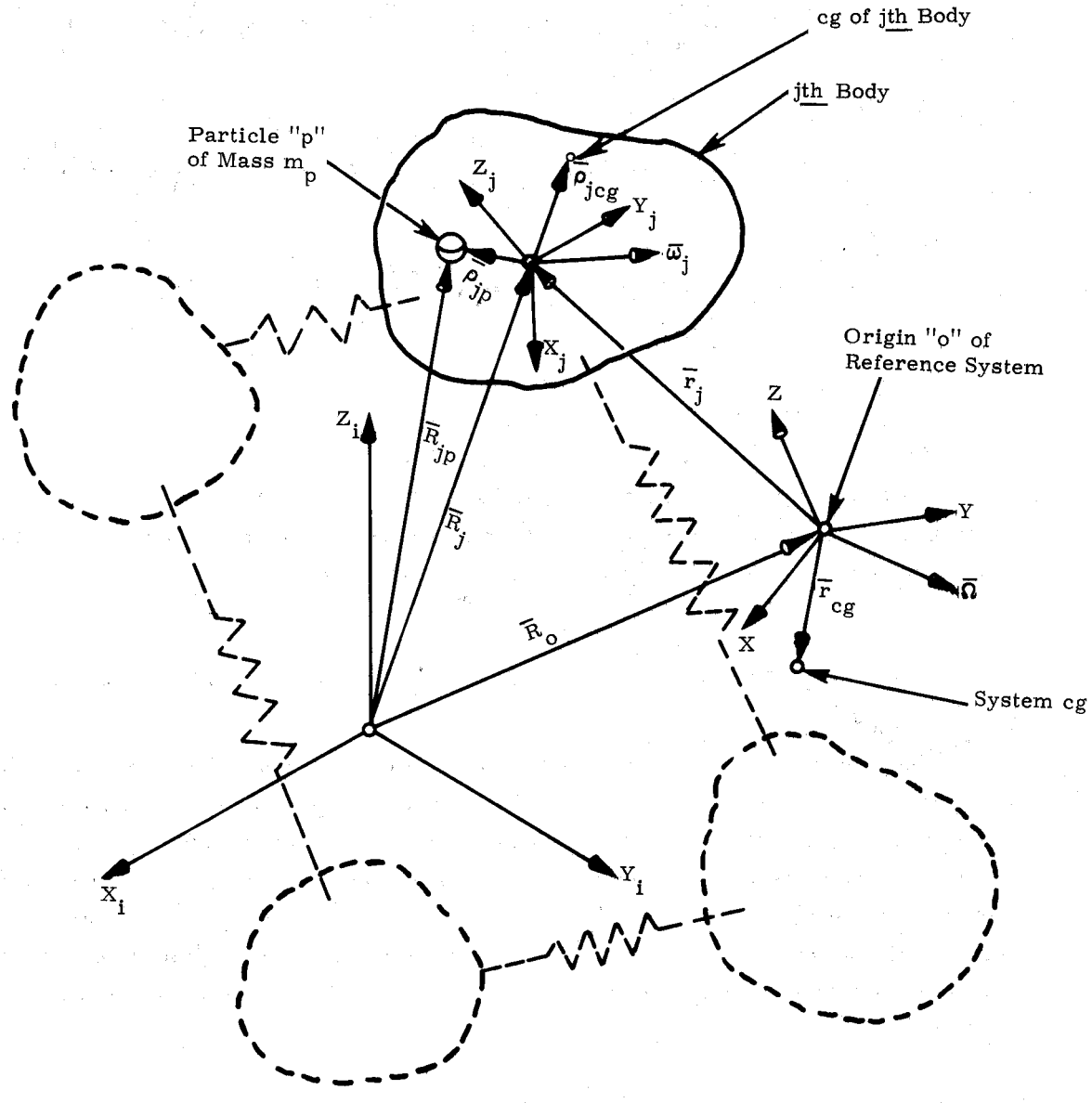

Figure 1. Coordinate Systems

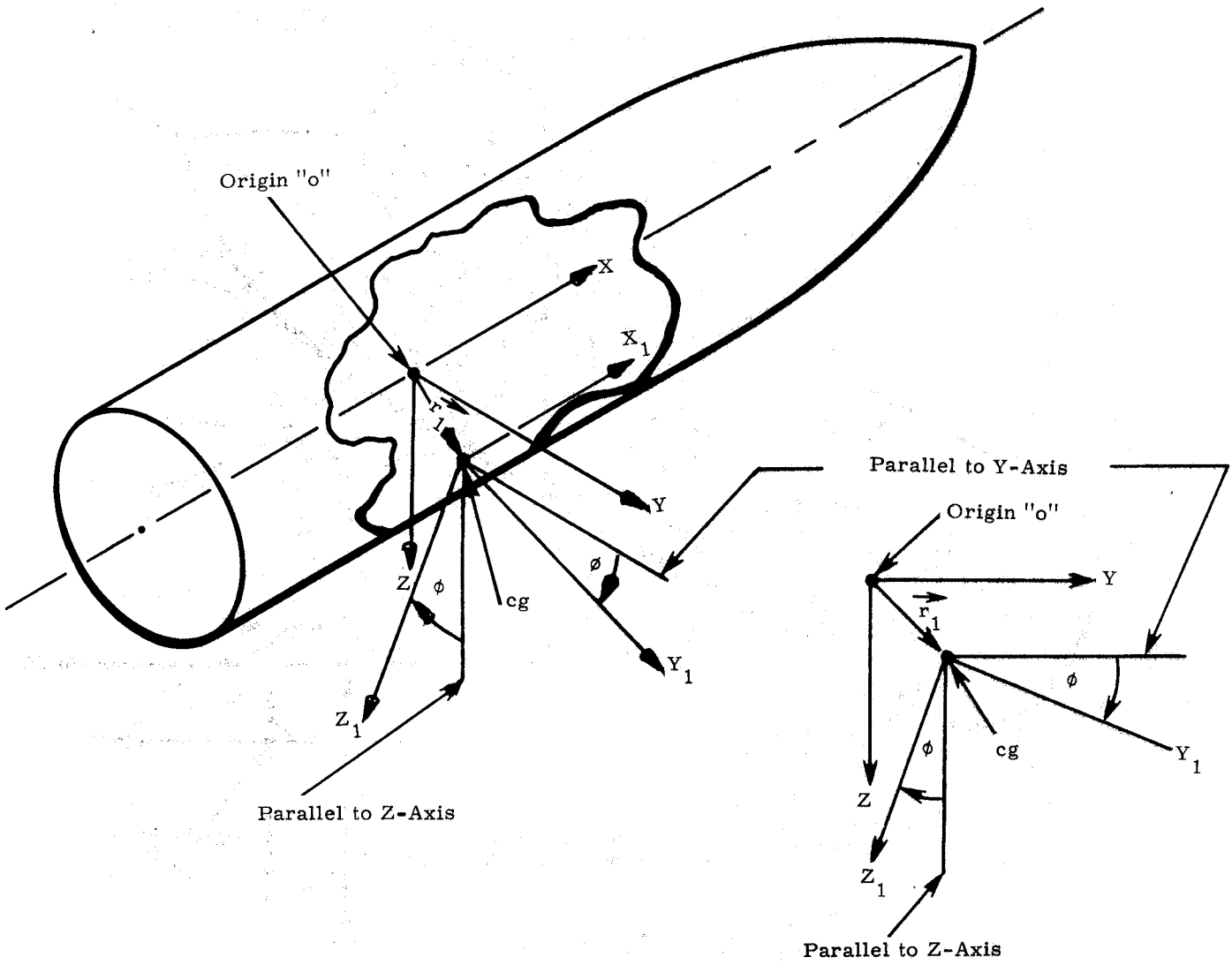

Figure 2. Spinning Asymmetrical Body
(Nonrolling Coordinates)

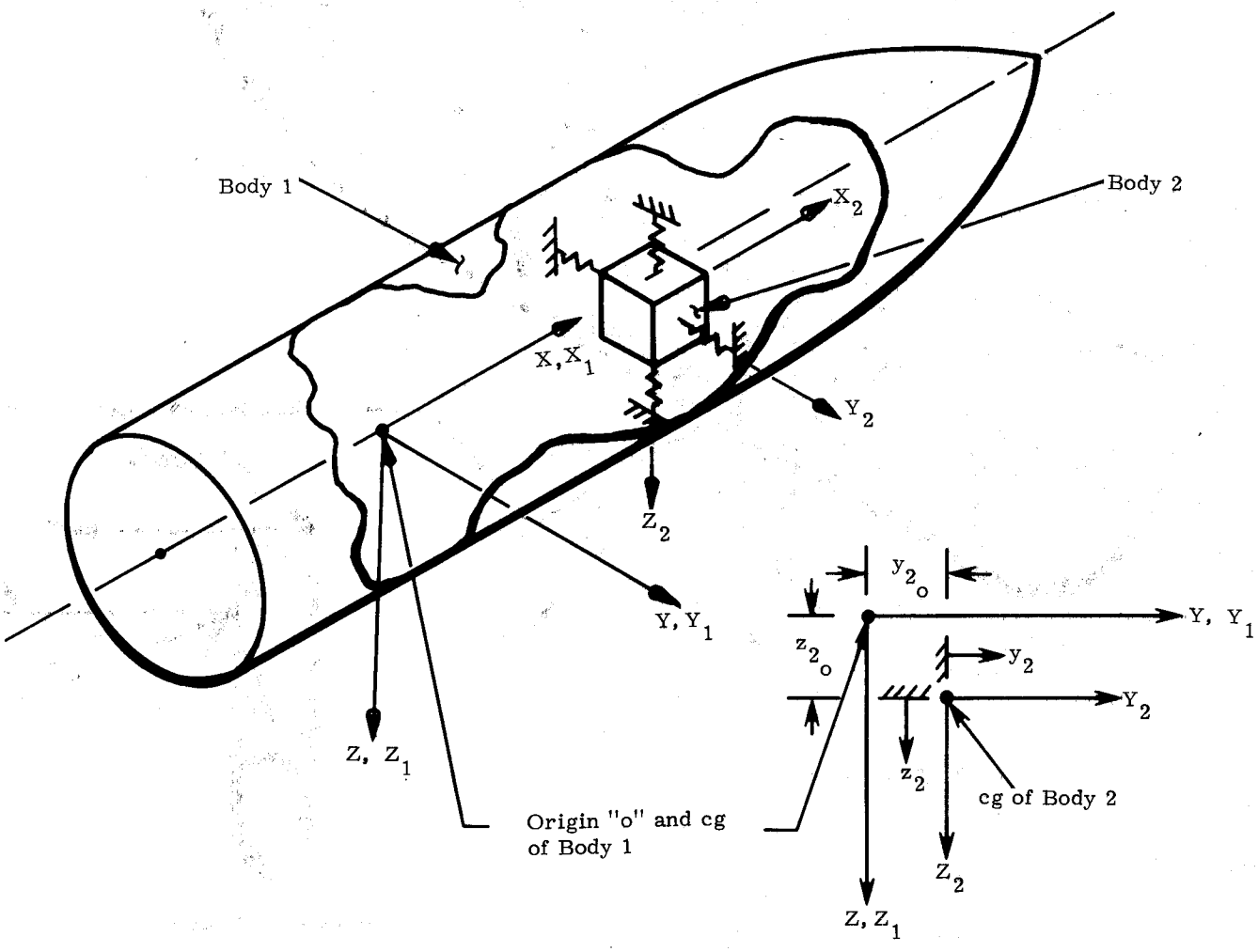

Figure 3. Internal Vibrating Member
(Body Fixed Coordinates)

References

1. W. T. Thomson, Introduction to Space Dynamics, New York, London: John Wiley and Sons Incorporated, 1961.

2. B. Etkin, Dynamics of Flight Stability and Control, New York, London: John Wiley and Sons Incorporated, 1959.

3. D. T. Greenwood, Principles of Dynamics, Prentice-Hall Incorporated, Englewood Cliffs, New Jersey, 1965.

4. A. E. Hodapp, Jr., Equations of Motion for Constant Mass Entry Vehicles with Time Varying Center of Mass Position, SC-RR-70-691, Sandia Laboratories, Albuquerque, New Mexico, November 1970.

DISTRIBUTION:

Aerospace Corporation
2350 El Segundo Blvd.
Los Angeles, CA 90009
Attn: D. H. Platus

ARO, Inc. (2)
vonKarman Gas Dynamics Facility
Arnold Air Force Station, TN 37389
Attn: J. C. Uselton
C. J. Welsh

AVCO Corporation
Missile Systems Division
201 Lowell St.
Wilmington, MA 01887
Attn: I. Sacks

Ballistic Research Laboratories (2)
Exterior Ballistics Laboratory
Aberdeen Proving Ground, MD 21005
Attn: C. H. Murphy
R. F. Lieske

General Electric Company
Reentry Systems Department
3198 Chestnut St.
Philadelphia, PA 19101
Attn: J. J. Pettus

General Electric Company
Armament Systems Department
Lakeside Ave.
Burlington, VT 05401
Attn: R. H. Whyte

Kaman Sciences Corporation
1700 Garden of the Gods Road
Colorado Springs, CO 80907
Attn: F. Barberra

Lockheed Missiles and Space Company
P. O. Box 504
Sunnyvale, CA 94088
Attn: L. E. Ericsson

Los Alamos Scientific Laboratory (2)
P. O. Box 1663
Los Alamos, NM 87544
Attn: R. N. Thorn (Mail Stop 218)
E. H. Eyster (Mail Stop 686)

Naval Surface Weapons Center
White Oak Laboratory
Silver Spring, MD 20910
Attn: F. J. Regan

Picatinny Arsenal (3)
Dover, NJ 07801
Attn: C. J. Spinelli, SARPA-ND-D-A-B
A. A. Loeb, SARPA-FR-S-A
D. H. Mertz, SARPA-FR-S-A

The John Hopkins University
Applied Physics Laboratory
8621 Georgia Ave.
Silver Spring, MD 20910
Attn: L. S. Glover

University of California (3)
Lawrence Livermore Laboratory
P. O. Box 808
Livermore, CA 94550
Attn: W. F. Scanlin, Jr. (L-24)
C. L. Wraith (L-122)
W. K. Haslam (L-122)

1000 G. A. Fowler
1300 D. B. Shuster
1310 A. A. Lieber
1320 M. L. Kramm
1330 R. C. Maydew
1331 H. R. Vaughn (20)
1331 A. E. Hodapp (10)
1332 D. F. McVey
1333 S. McAlees, Jr.
1334 C. W. Peterson
1335 W. R. Barton
1350 R. G. Clem
1400 A. Y. Pope
8100 L. Gutierrez
8110 A. N. Blackwell
8116 B. R. Sanders
8122 G. A. Benedetti
8150 D. E. Gregson
8160 R. D. Cosine
8167 D. J. Bohrer
8360 J. F. Barham
8362 G. L. Otey
8366 J. D. Gilson
8266 E. A. Aas (2)
3141 C. A. Pepmueller (Actg.) (5)
3151 W. L. Garner (3)
for ERDA/TIC (Unlimited Release)
ERDA/TIC (25)
(R. P. Campbell, 3171-1)