SAND76-0099
Unlimited Release

Construction and Operation of the Surface Contaminant Detector Mod II

Robert E. Cuthrell, Vaughn D. Nogle, Donald W. Tipping

Prepared by Sandia Laboratories, Albuquerque, New Mexico 87115
and Livermore, California 94550 for the United States Energy Research
and Development Administration under Contract AT(29–1)-789

Printed March 1976

Sandia Laboratories

SF 2900 Q(7-73)

When printing a copy of any digitized SAND Report, you are required to update the markings to current standards.

Issued by Sandia Laboratories, operated for the United States Energy Research and Development Administration by Sandia Corporation.

NOTICE

This report was prepared as an account of work sponsored by the United States Government. Neither the United States nor the United States Energy Research and Development Administration, nor any of their employees, nor any of their contractors, subcontractors, or their employees, makes any warranty, express or implied, or assumes any legal liability or responsibility for the accuracy, completeness or usefulness of any information, apparatus, product or process disclosed, or represents that its use would not infringe privately owned rights.

SAND76-0099

CONSTRUCTION AND OPERATION OF THE SURFACE CONTAMINANT DETECTOR MOD. II

R. E. Cuthrell, V. D. Nogle, and D. W. Tipping
Surface Metallurgy Division 5834
Sandia Laboratories, Albuquerque, New Mexico 87115

ABSTRACT

This report contains detailed construction and operating instructions, a parts list,* and cost estimates for a surface contaminant detector. The instrument is sensitive to the condensible contaminant content of environments and has been used for monitoring industrial facilities where contaminant sensitive parts are processed.

*The identification of a particular manufacturer's product in this report is in no way an endorsement of the product and does not warrant that the product is suitable for use.

ACKNOWLEDGMENT

The authors wish to acknowledge the contributions of D. M. Mattox of Sandia Laboratories who initially suggested the application of gold bonding technology[1-6] to the development of an instrument for monitoring condensible atmospheric contaminant levels.

TABLE OF CONTENTS

	Page
DESCRIPTION	4
CONSTRUCTION	4
Sensing Head	4
Protection, Packaging, and Transportation of the Sensing Head	7
Electronics Package	8
OPERATION	9
Initial Set-Up	9
LVDT Nulling Procedure	10
Calibration Procedure	10
Measurement Procedures	11
Estimated Coefficients of Adhesion	12
MAINTENANCE	13
SHOP DRAWINGS AND WIRING DIAGRAMS	14
PARTS LIST	36
REFERENCES	42
DISTRIBUTION	43

DESCRIPTION

The surface contaminant detector is an instrument which makes and breaks solid-phase bonds between the rounded ends of two gold rods once every 3.8 seconds. A platinum wire resistance heater is used to thermally desorb contaminants from the gold surfaces. Tensile loads are integrated during the break cycle and many integrals are summed over an electronically timed interval. Since the strengths of gold-gold bonds depend on the ambient concentration of condensible contaminants, the integral sum at the end of a selected time is a single numerical value which is directly proportional to the cleanliness of the environment.[7]

The instrument may be used for monitoring clean rooms, clean benches, and storage areas in industrial facilities where contaminant sensitive parts are processed.

CONSTRUCTION

The detector consists of a sensing head which is connected by cables to an electronics package.

Sensing Head

Two components of the sensing head are shown in Figs. 1 and 2. These are mounted on the large face of a one foot length of aluminum channel (4 x 1.72 x 0.32 in.), the parallel sides of which serve as legs for the sensing head and as brackets for mounting the cable connections. In the mounted position the gold rods are opposed, axially aligned, and separated by a small gap between the surfaces (J).

As shown in Fig.1, a 12 Vdc solenoid (A) is mounted on an aluminum plate (B) which may be positioned axially with respect to the lower mounting plate (C). Two steel springs (D) support the solenoid core magnet (E), which is connected to a ceramic spacer (G) by a threaded

rod (F). The heater-gold rod assembly (I) is mounted at the other end of the ceramic spacer. The core magnet is pressed into threaded brass fittings (K and L). Aluminum mounting brackets (H) support the core assembly which is translated axially when a symmetrical positive and negative triangular potential ramp is applied to the solenoid. This push-pull action causes alternating bond forming and bond breaking loads at the gold contacting surfaces (J) at a frequency of about 0.26 Hz.

Figure 2 shows a load cell which consists of a linear variable differential transformer (LVDT) - spring combination. The LVDT coil (M) is mounted in an aluminum block (N) which may be translated axially on the aluminum base plate (O) to provide a mechanically zeroed electrical output when the core (R) is in an unloaded position. The springs (D), the heater-gold rod assembly (I), the LVDT core (R), and the threaded rod (P) are mounted on aluminum brackets (H) as described for the solenoid assembly (Fig. 1). Ceramic tubes (S and Q) are slipped over the threaded rod (P) to position the core (R). An aluminum retaining ring (T) holds the LVDT coil in the block.

The base plates (C and O) shown in Figs. 1 and 2 are slotted for axial and transverse alignment of the gold surfaces. Figures 3-9 show detailed drawings which may be used for the fabrication of the component parts.

Four springs (D, Figs. 1 and 2) are fabricated individually by clamping a sheet of annealed steel spring stock (MIL-S-7947, 0.010 in. thick) between templates (Fig. 10), drilling the three upper holes, and grinding first one side and then the other (upper edge, Fig. 10). (The spring stock is turned over in the template for grinding the second side.) The spring is then bent around a forming plate (Fig. 11), fastened in place with a 6-32 screw on one side and two 4-40 screws on the other side, heat treated to a dull glow using an oxygen-natural gas torch, and cooled in water while fastened to the plate. The spring is removed by sliding it off the end of the forming plate and it is mounted as shown in Figs. 1 and 2.

Figures 12 and 13 show expanded views of the heater-gold rod assembly (I, Figs. 1 and 2). The assembly sequence is: (1) insert the three ceramic tubes (Id and Ie) in the two stainless steel plates (If), (2) position the six stainless steel lock rings (Ig), (3) assemble the split clamp (Ia) on a 3/8 in. dia. ceramic spacer and tighten the screws and nuts (Ic), (4) insert the long ceramic tubes (Id) in holes 1 (Ia) and tighten the set screws, and (5) spot weld the lock rings (Ig) to the steel plates (If).

A nickel wire, 0.050 in. dia., is inserted through the long ceramic tubes (Id) such that about 1 in. of wire protrudes beyond the right ends (Fig. 12) and about 2 in. beyond the left ends of the ceramic tubes (Id). The two left ends of the wires are then bent to pass through holes 2 (Ia), the set screws tightened on the wires, and the ends protruding to the right of Ia (through holes 2) are bent 90° away from the axis of the assembly and 180° to each other. There should be approximately 1/2 in. of wire beyond the lateral extremity of Ia. A cylindrical connector is then crimped on each of these two wire ends. The wire ends to the right of the ceramic tubes (Id) are bent in a tight U back to the left (Fig. 12), very near the right ends of the tubes, one above and the other below the plane of Fig. 12. It is advisable to flame the nickel wires while making these bends so that the bending forces are reduced and the ceramic tubes are not broken. Wire to the left of <u>both</u> steel plates (If) is not required and may be cut off (at the ends most recently bent). These protruding ends are then carefully sanded to remove the thick oxides which are produced during flaming. Eight turns of 0.020 in. dia. platinum wire are wrapped around each ceramic tube Ie and the ends of the platinum wires are spot welded to the nickel wires. The platinum turns should be equally spaced along the full length of the ceramic tube (Ie), between, but not touching the steel plates (If). Do not insert the gold rods at this time.

Flexible coils of bare copper stranded wire are used to connect the two platinum heater elements in series using the ceramic spacers

(G, lower right, Fig. 1; lower left, Fig. 2) as binding posts. Bare copper wire through ceramic tubing insulators is used for connecting the heater elements and the solenoid coil to cable terminals below the aluminum channel. Although connections may be soldered below the channel, only crimp or friction connectors may be used above the channel. Only inert materials such as ceramic tubing may be used above the channel for electrical insulation.

After machining and immediately before assembly, each of the parts shown in Figs. 1-13 (except the solenoid and the LVDT coils) should be cleaned ultrasonically, first in trichloroethylene, then in acetone. Fresh solvents should be used for cleaning each part. After complete assembly (except for the gold rods) all surfaces except the solenoid and the LVDT coils should be rinsed with fresh acetone.

When the above assembly and cleaning are completed, two gold rods (99.999% gold, 0.050 in. dia.) are cut to about 3/4 in. lengths. One end of each rod is melted to form an elongated pendant droplet and resolidified. The rods (Ih, Fig. 12) are inserted in the ceramic tubes (Ie), and the left ends (Fig. 12) are melted to form enlarged cross sections which lock the rods in the tubes.

Protection, Packaging, and Transportation Of the Sensing Head

The contacted ends of the gold rods (J, Figs. 1 and 2) should never be touched by any material other than gold and the sensing head should be protected by a dust cover when not in use. An aluminum cover was found to provide adequate protection from dust and, in addition, to provide protection from mechanical damage during transportation by air freight. Prior to transportation, the gold contacts should be separated to the maximum extent allowed by the slots in Part C, Figs. 1 and 4. "THIS END UP" labels should be affixed to cartons containing the sensing head (the "UP" direction is the same as that for the normal working position, Figs. 1 and 2).

Electronics Package

A block diagram of the electronic components is shown in Fig. 14. Wiring diagrams for each component are shown in Figs. 15-19, and the front and rear panels of the electronics package are shown in Fig. 20. These components provide for repetitive contacting of the gold-to-gold, for force measurements, for data processing, and for periodic cleaning of the gold surfaces by thermal desorption.

The ramp circuit (Fig. 15) controls the ramp power (Fig. 16) to provide an oscillating positive and negative 12V, 1A triangular wave to the solenoid (A, Fig. 1). Variable resistors, internally mounted in the electronics package, are provided for factory setting of the frequency, symmetry, and amplitude of this signal. External control of the ramp is provided by an ON-OFF switch (5, upper, Fig. 20). The ramp signal may be monitored with an oscilloscope at the output terminal on the rear panel of the electronics package (5, lower, Fig. 20).

A timer control circuit (Fig. 17) provides signals for the digital clock (16, upper, Fig. 20) and, through the logic circuit (Fig. 18), provides automatic control of the heaters in the sensing head (I, Figs. 1 and 2). A power relay and two 2.5 Vac, 10 A transformers (connected in series) are used in the heater circuit (not shown) to desorb condensible contaminants from the gold surfaces.

Potentials, which are proportional to the compressive and tensile loads at the contacting gold surfaces (J, Figs. 1 and 2), are generated by the linear variable differential transformer (LVDT) in conjunction with a Daytronic Model 830A demodulator (Fig. 14). These raw data may be fed to a chart recorder or an oscilloscope from an output connector (A, Fig. 14, and 3, lower, Fig. 20) on the rear panel of the electronics package. They are also fed to the integration circuit (Fig. 19) which repetitively integrates and accumulates the tensile portions only of the cyclic bond making/bond breaking loads. This summation is displayed continuously on a digital voltmeter (13, upper, Fig. 20) and also may be fed to a chart recorder or an oscilloscope from an output connector (B, Fig. 14, and 2, lower, Fig. 20) on the rear panel of the electronics package.

Shielded cables, each three feet long, with separable connectors at both ends, are used to interconnect the electronics package and the sensing head. A separate cable bundle is used for each component: (1) the heater, (2) the solenoid, and (3) the LVDT. Simple two lead cables are used for the solenoid and heaters. A special cable, the design of which is available from the Daytronic Corp., is used to connect the LVDT (Model DF160) to the demodulator (Model 830A). For facile transportation, these three cables may be coiled and inserted in a foam padded carrying case which may be constructed for the electronics package.

OPERATION

Initial Set-Up

After unpacking the surface contaminant detector, remove the aluminum dust cover and inspect the sensing head springs (D, Figs. 1 and 2) and the heater-gold rod assembly (I, Figs. 1 and 2) for damage or breakage during shipment. Spare springs should always accompany the instrument when transported by commercial carrier. In case of damage, refer to the CONSTRUCTION section for repair.

When it has been determined by visual inspection that the sensing head appears to be in working order, connect the three cables between the sensing head and the electronics package, insert the power cord plug in a 115 Vac, single phase receptacle, and turn on the power switch (2, upper, Fig. 20). Allow about 5 minutes for warm-up of the electronics.

WARNING

1. Unplug the instrument prior to removing the panels from the electronics package.
2. Do not touch accessible components within the electronics package when the power cord is plugged in.
3. Do not touch bare leads in the sensing head when the power cord is plugged in.

The following is a condensed extract from the "Operating Instructions, Daytronic Model 830A, LVDT Conditioner/Amplifier Module." For greater detail and trouble shooting of the LVDT portion of the electronics, consult the original manual (available from the Daytronic Corp., 2875 Culver Ave., Dayton, Ohio 45429, Phone: 513-298-7542).

LVDT Nulling Procedure

On the LVDT control panel (11, upper, Fig. 20), turn all controls to the center of their range. With the SENSITIVITY MULTIPLIER (X1) button depressed, push the NULL button and move the LVDT mounting block (N, Fig. 2) to the left or right (Fig. 2), with respect to plate O, until a minimum output reading is observed on the load meter (12, upper, Fig. 20); then turn the NULL ADJUST control and reduce the output reading as much as possible. Depress the X10 SENSITIVITY MULTIPLIER button and with the NULL button down, continue to refine the null output by alternate movement of the mounting block and adjustment of the NULL ADJUST control. Switch to the X100 SENSITIVITY MULTIPLIER button and do final refinement of the null by alternately adjusting the ZERO control and the NULL ADJUST control. These adjustments should be made with the gold rods (J, Figs. 1 and 2) in the noncontacting position and with the solenoid ramp switch (5, upper, Fig. 20) in the OFF position.

Calibration Procedure

After nulling, zero the output on the load meter (12, upper, Fig. 20) with the ZERO control while on the X100 range. Switch to the X10 range and rezero the output. Using the slotted motion of both plates C (Fig. 1) and O (Fig. 2), align the gold rods axially and transversely such that they are opposed and the gold surfaces (J, Figs. 1 and 2) are separated by a small gap. If necessary, insert shims or washers below plate C or plate O to align the gold rods vertically. Place the solenoid ramp switch (5, upper, Fig. 20) in the ON position. Using the COARSE SPAN control, adjust the LVDT output so that a full

scale peak meter reading (12, upper, Fig. 20) occurs with a peak compressive force at the gold surfaces (J, Figs. 1 and 2). Alternately readjust the ZERO control (when the gold contacts are unloaded) and the COARSE SPAN control. If the COARSE SPAN adjustment is insufficient, turn OFF the solenoid ramp switch and reposition the gold rods for a narrower gap. Do not use the X100 position in place of this mechanical adjustment since the instrumental drift, which is caused by thermal expansion when the heater is used, will be excessive at this higher sensitivity.

Measurement Procedures

Bond strength measurements, which are proportional to the cleanliness of the environment, may be accumulated during the gold clean-up period (heaters-ON), during the gold recontamination period (heaters-OFF, following initial clean-up), or both. In addition, the time required for the integral sum of the bond strengths to reach the digital voltmeter full scale value may be measured (longer periods are associated with higher contaminant levels). This last method of using the instrument is on of the most convenient and is listed below (other methods have been described elsewhere[7]):

1. Dust Cover - Removed.
2. Power Switch - On, allow 5 minutes for warm-up of the electronics.
3. Solenoid Ramp Switch - ON.
4. Load Meter Zero - Set (using the LVDT ZERO control, set the zero during unloaded periods).
5. Load Meter Full Scale - Set (using the LVDT COARSE SPAN, set the full scale to correspond with peak deflection).
6. Alarm Switch - Neutral.
7. Simultaneously:
   a. Digital Voltmeter Reset Button - Press and Release.
   b. Start Switch - Rapidly Down and Release.
8. Alarm Switch - Up.
9. Load Meter Zero - Reset (as required).

10. When The Digital Voltmeter Reaches Full Scale,
    In Rapid Succession:
    a. Time - Noted (on the digital clock).
    b. Stop Switch - Down and Release.
    c. Start Switch - Rapidly Down and Release.
11. Time - Recorded (record the time noted in step 10a.).
12. Alarm Switch - Neutral.
13. At 4 Minutes On The Digital Clock - Perform Steps 4 and 5.
14. At 5 Minutes on The Digital Clock - Repeat Steps 7 Through 14.

It should be noted that the heaters will be energized (and contaminants will be desorbed from the gold) only if the alarm switch is in the neutral position when the start switch is depressed. The clock will be started any time the start switch is depressed. For the above measurement procedure, a 5 minute recontamination time was chosen for convenience only. At least five, and preferably ten measurements should be taken in each environment since the first two or three measurements should be discarded. These discarded measurements are strongly influenced by the prior exposure of the tester and may have very little relation to the environment of interest. Approximately one hour is required to perform ten measurements.

The shut-down procedures are:

1. Stop Switch - Down and Release.
2. Solenoid Ramp Switch - OFF.
3. Power Switch - OFF.
4. Power Cord - Unplugged.
5. Dust Cover - Installed.

Estimated Coefficients of Adhesion

Using the procedures described in the previous section, one may obtain the average time required for the sum of the integrals of the tensile forces applied to the gold-gold bonds to reach full scale on the

digital voltmeter (DVM). These times may be converted to average coefficients of adhesion by reference to calibration curves such as those shown in Fig. 21. Since there may be slight differences in the performance of surface contaminant detectors, each tester should be calibrated as follows:

1. Connect the LVDT load read-out terminal (3, lower, Fig. 20) to a chart recorder and, while noting the integral increments ($\Delta\int$) on the DVM (13, upper, Fig. 20), record the associated bond-forming (F_1) and bond-breaking (F_2) loads.

2. Note the full scale value (P) of the potential on the DVM (13, upper, Fig. 20).

3. Using the digital clock (16, upper, Fig. 20) and the load meter (12, upper, Fig. 20) determine the average time per test (t).

A calibration constant (K) may be calculated:

$$K = \frac{P\,t\,F_2}{(\Delta\int)F_1} \quad , \qquad (1)$$

and the average coefficient of adhesion (σ) may be estimated:

$$\sigma = K / T \quad , \qquad (2)$$

where T is the time required to reach full scale on the DVM. The solid curve in Fig. 21 was calculated for various times T using Eq. (2) for steady state temperature conditions. For measurements of T beginning at the heater turn-on time, the above σ values should be multiplied by approximately 0.5 (dashed curve, Fig. 21).

MAINTENANCE

The contaminant detector is highly maintenance free. A single pair of gold rods has been used for over 100,000 adhesion tests. Although the springs may eventually become fatigued, they may be

replaced easily, as indicated in the CONSTRUCTION section. Since the heaters are used at moderate temperatures (250 - 300°C), heater burn-out is not expected. There are no requirements for resupply, accessories, sample preparation, or repair (except for damage which may occur as a result of transportation or careless operation). The electronics are all solid-state and should exhibit the long life which is characteristic of such components. In the event of malfunction or component failure, detailed wiring diagrams are furnished in this report for ready reference.

SHOP DRAWINGS AND WIRING DIAGRAMS

Assembly drawings for the sensing head are shown in Figs. 1, 2, 6, and 12. Figures 3-11 and 13 may be used for machining the individual parts to the following tolerances:

1. Separations between through holes, tapped holes, and slots should be held to ±0.002 in.

2. Overall dimensions which are specified in inches and/or nondecimal fractions of an inch (e.g., 1/4, 3/4, 1-1/2, etc.) should be held to ±0.015 in. for dimensions of 1/4 in. or greater. Dimensions less than 1/4 in. should be held to ±0.005 in.

3. Dimensions which are specified in inches and/or decimal fractions of an inch (e.g., 0.5, 1.90, etc.) should be held to ±0.002 in.

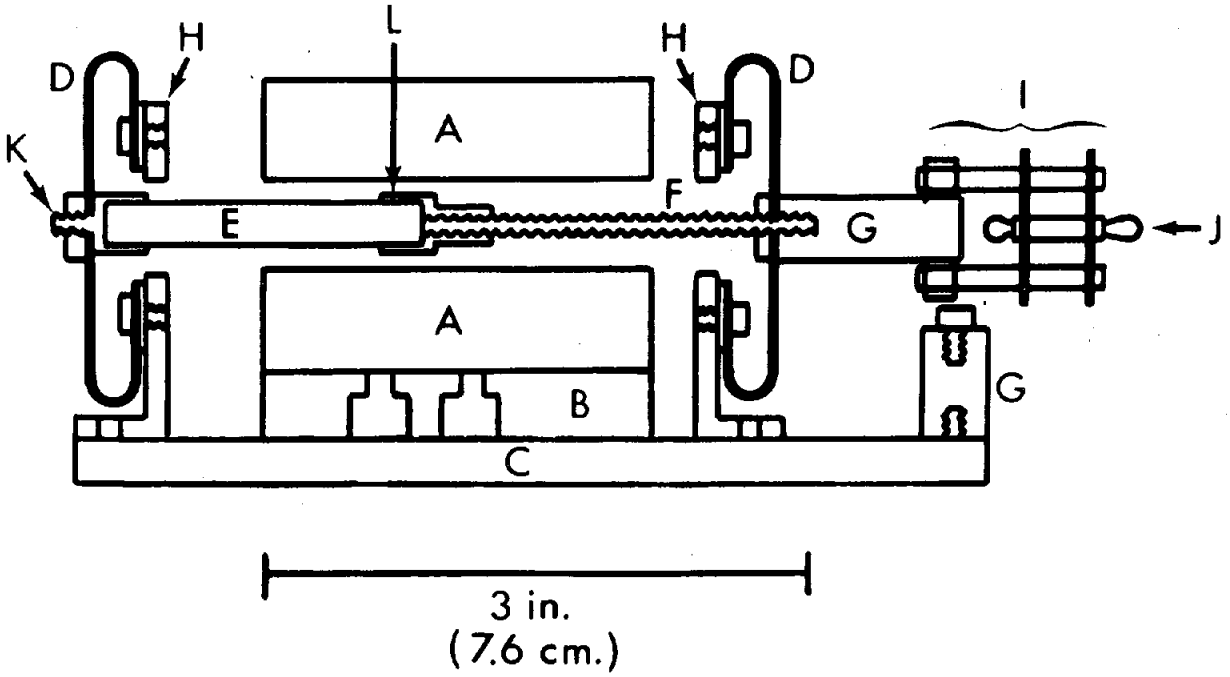

Fig. 1. Solenoid assembly: 12 Vac solenoid (A); solenoid coil mount (B); slotted plate (C); steel springs (D); magnetic core (E); threaded rod, 6-32, 2-3/16 in. long (F); ceramic spacers, 3/8 in. dia. (G); spring mounting brackets (H); heater-gold rod assembly (I); contacted gold surface (J); brass fittings (K and L). Negative No. D76-652.

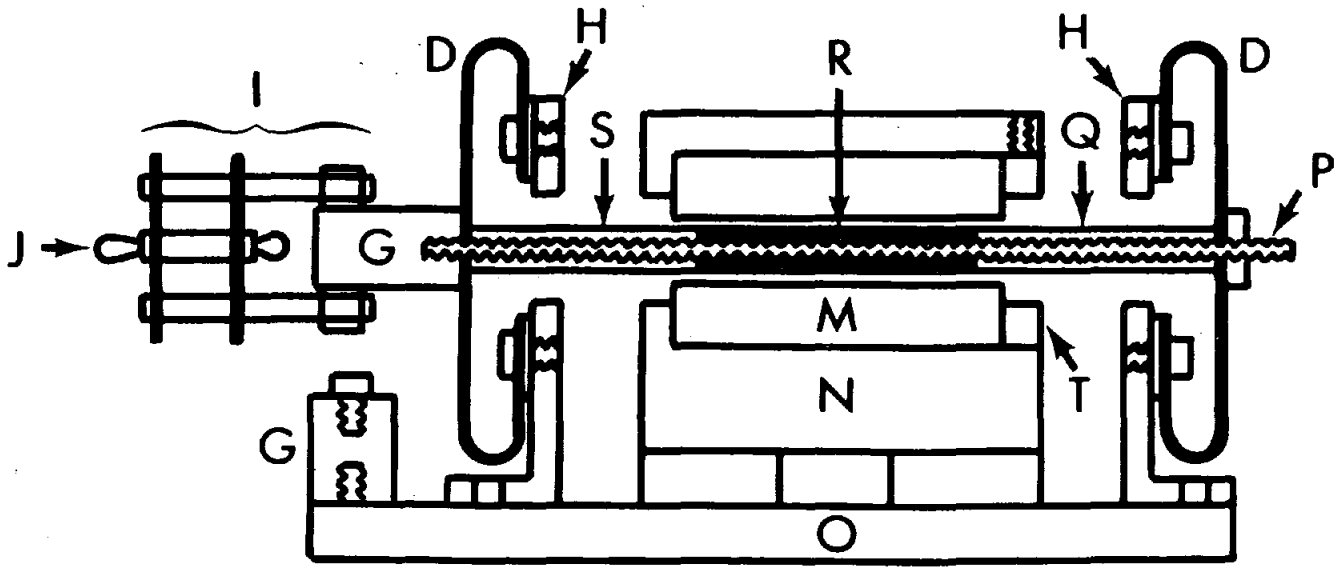

Fig. 2. Load cell: linear variable differential transformer (M); LVDT mounting block (N); slotted plate (O); threaded rod, 6-32, 4 in. long (P); ceramic tube, 0.25 in. o.d., 0.18 in. i.d., 1-1/8 in. long (Q); LVDT core (R); ceramic tube, 0.25 in. o.d., 0.18 in. i.d., 1-1/16 in. long (S); retaining ring (T). Negative No. D76-638.

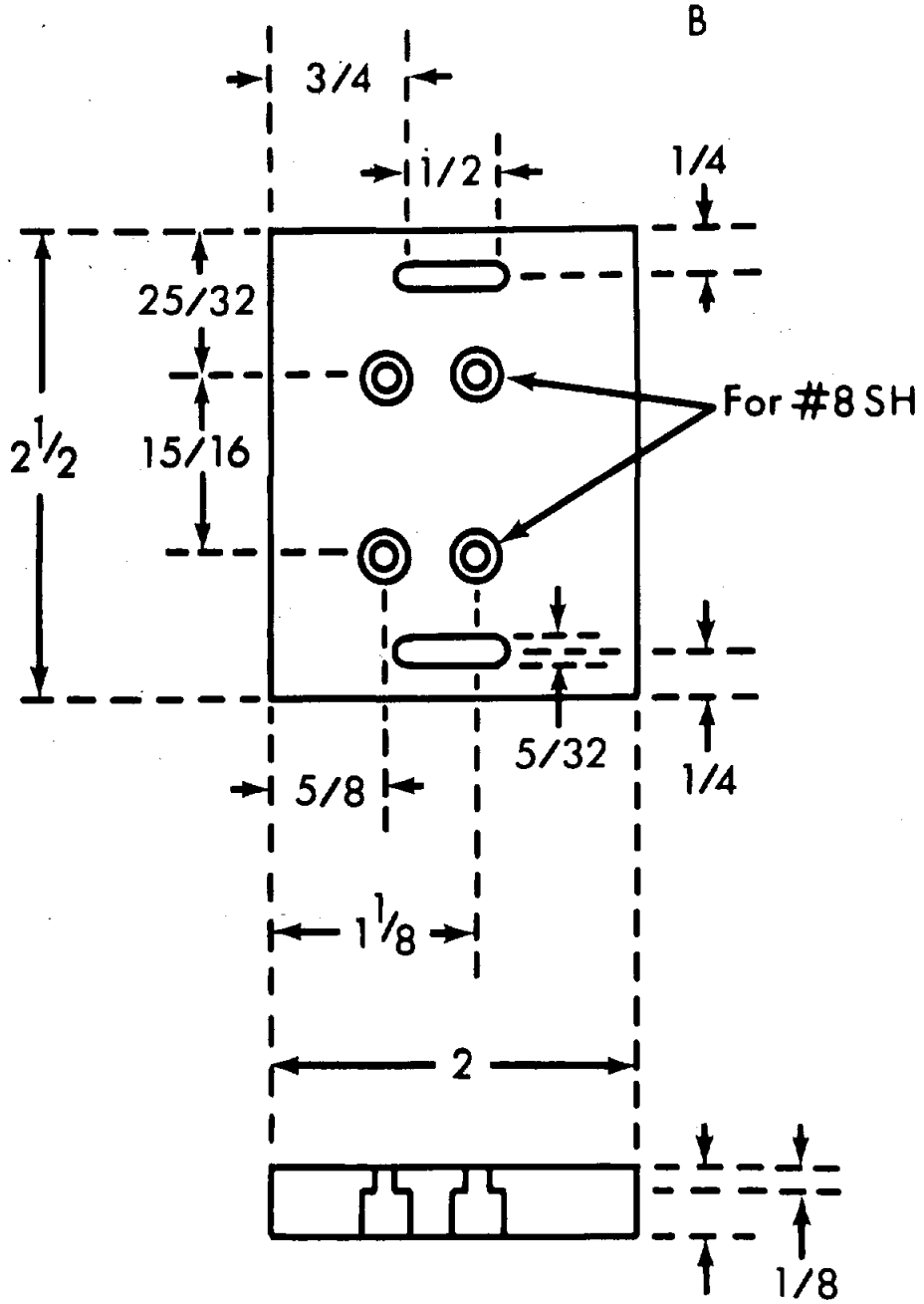

Fig. 3. Solenoid coil mount: 1 ea., aluminum. Negative No. D76-639.

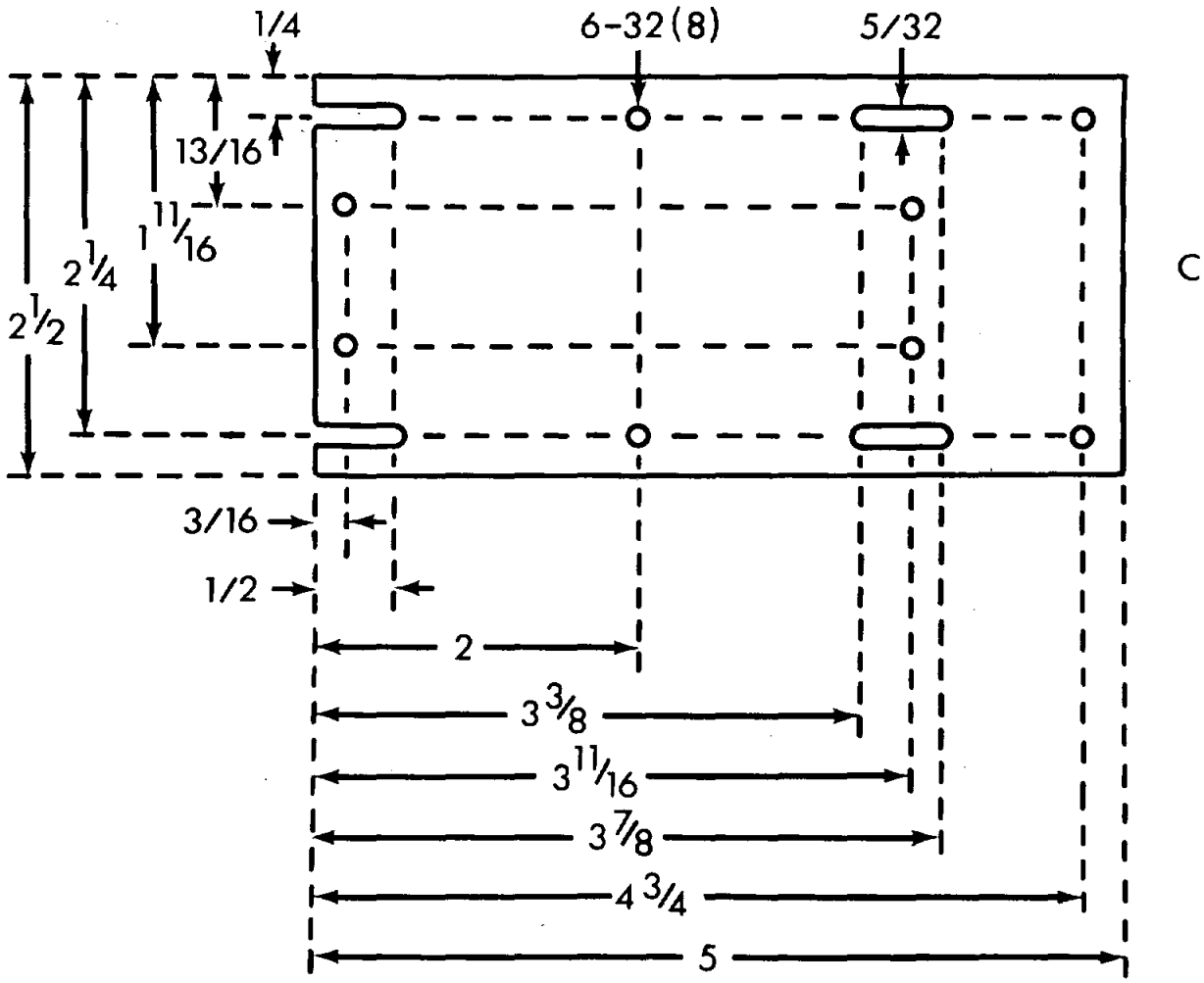

Fig. 4. Slotted plate: 1 ea., aluminum, 1/4 in. thick. Negative No. D76-640.

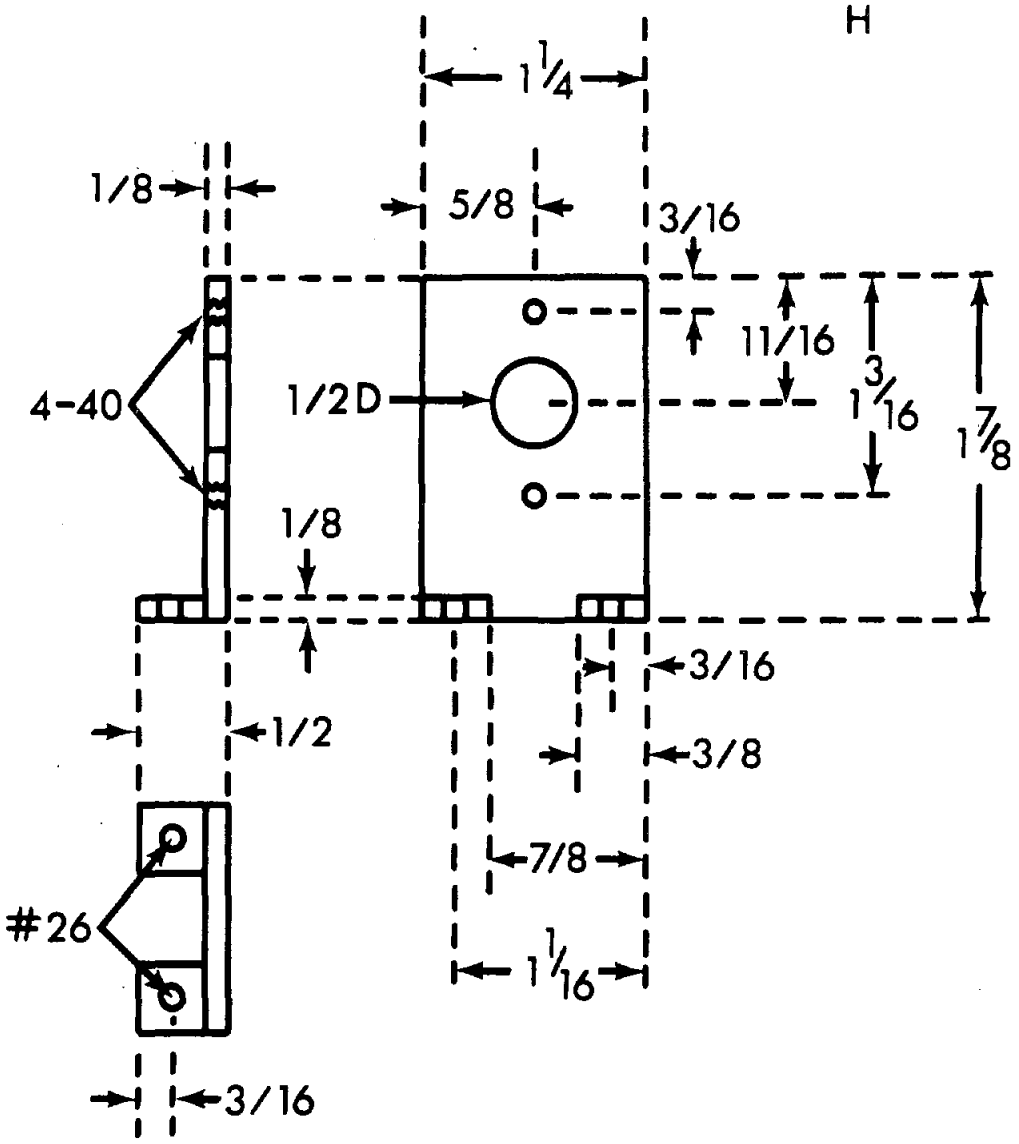

Fig. 5. Spring mounting bracket: 4 ea., aluminum. Negative No. D76-644.

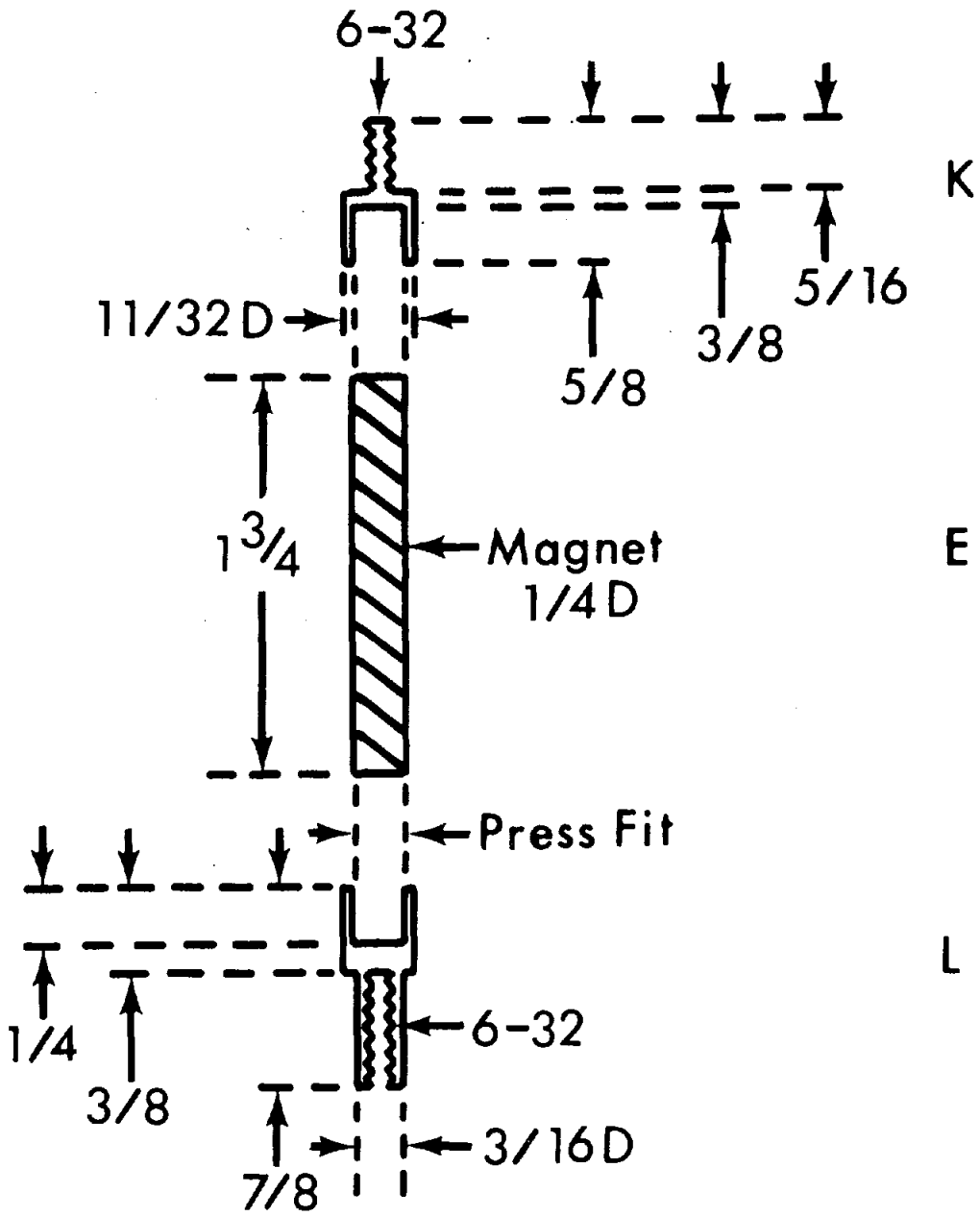

Fig. 6. Brass fitting, 1 ea. of (K) and (L); magnet, 1 ea. (E). Negative No. D76-641.

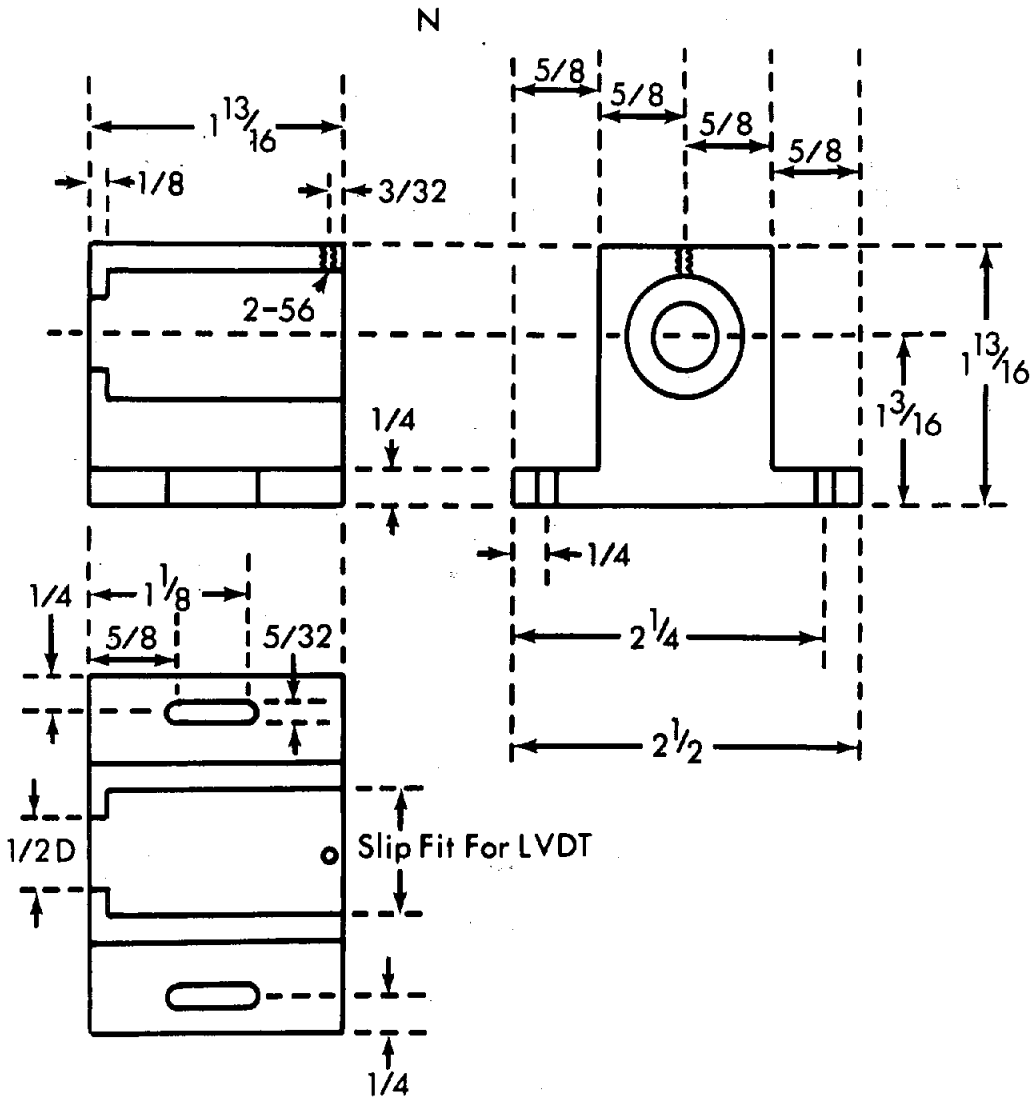

Fig. 7. LVDT mounting block, 1 ea., aluminum, for Daytronic Model DF 160. Negative No. D76-642.

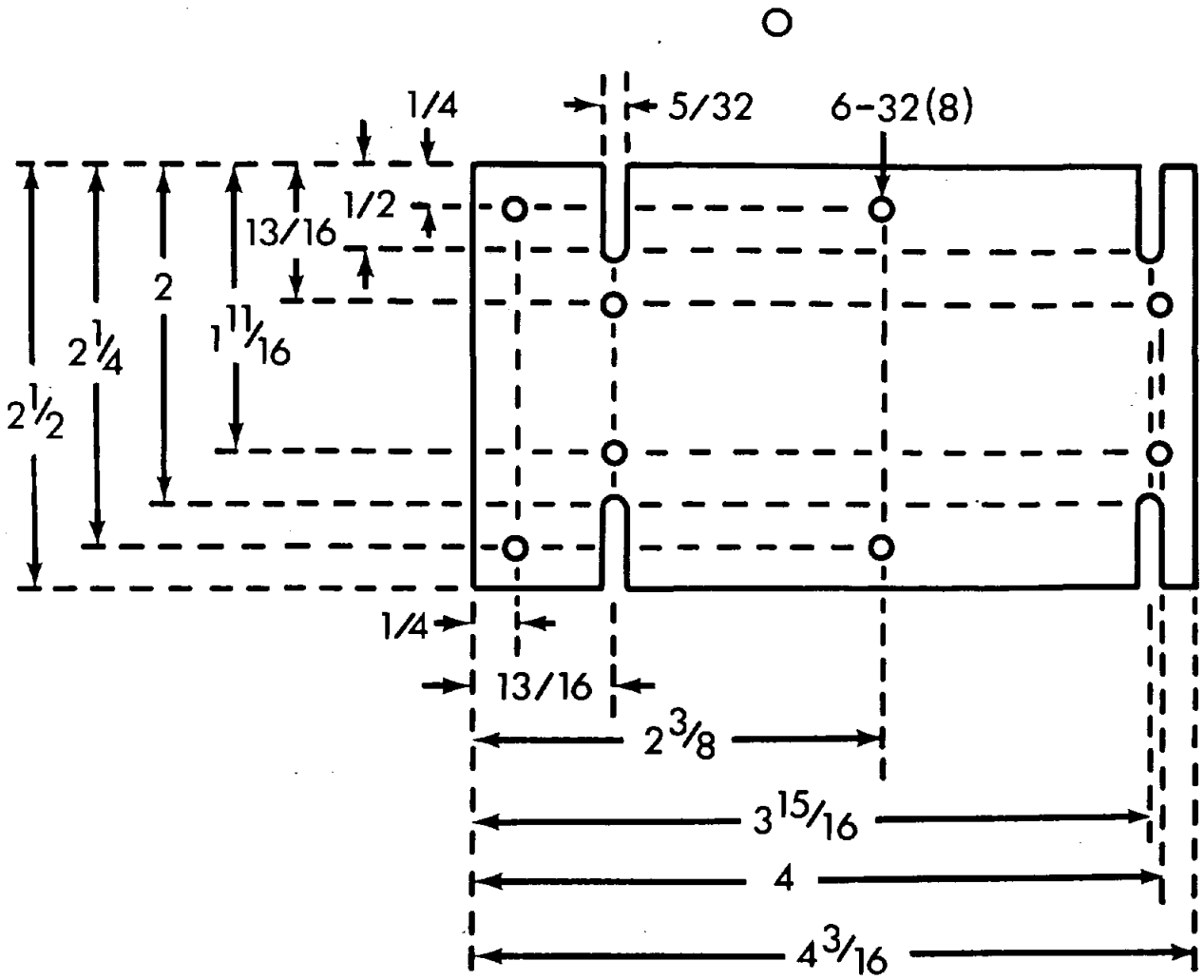

Fig. 8. Slotted plate, 1 ea., aluminum, 1/4 in. thick. Negative No. D76-643.

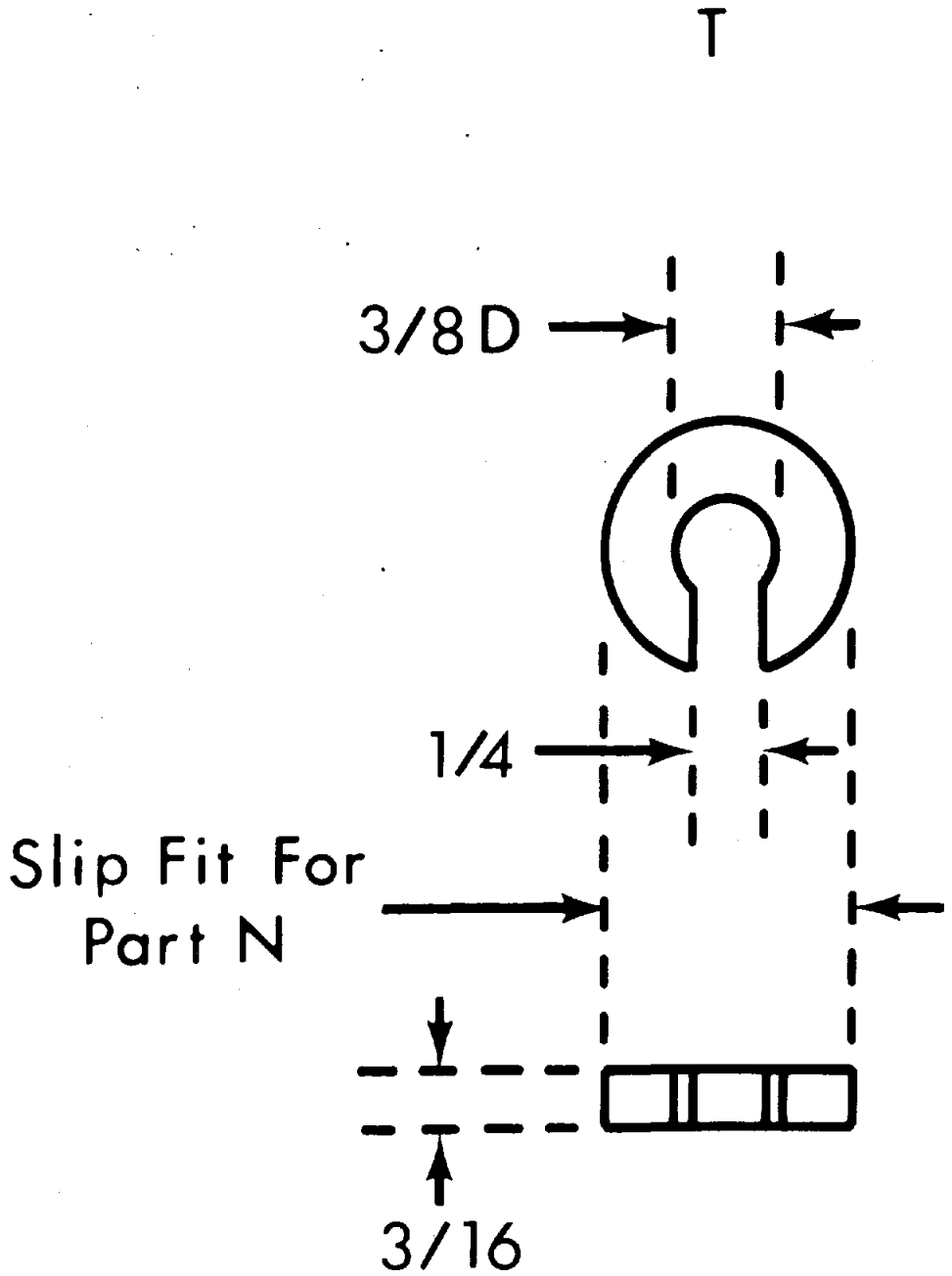

Fig. 9. Retaining ring, 1 ea., aluminum, Negative No. D76-636.

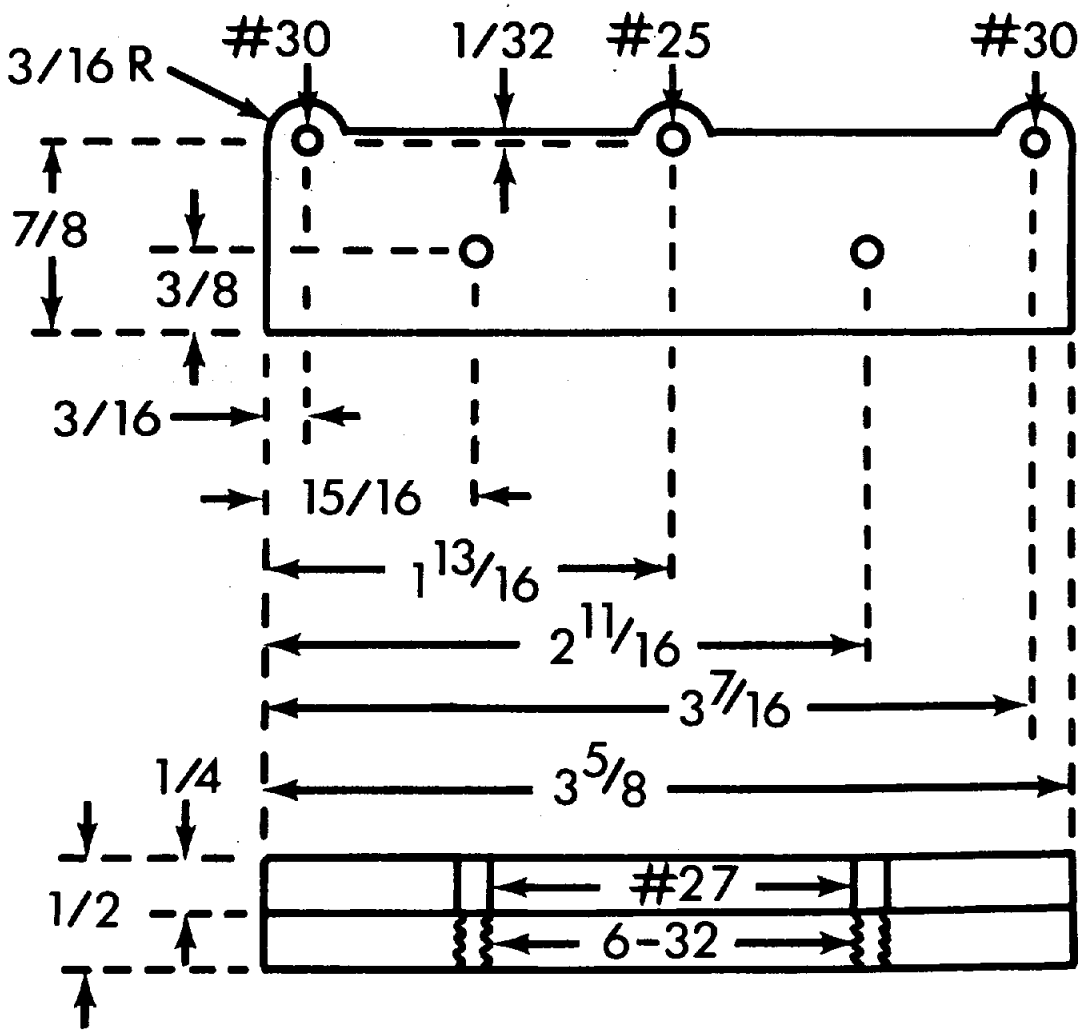

Fig. 10. Brass templates for grinding steel springs, 2 plates. Negative No. D76-645.

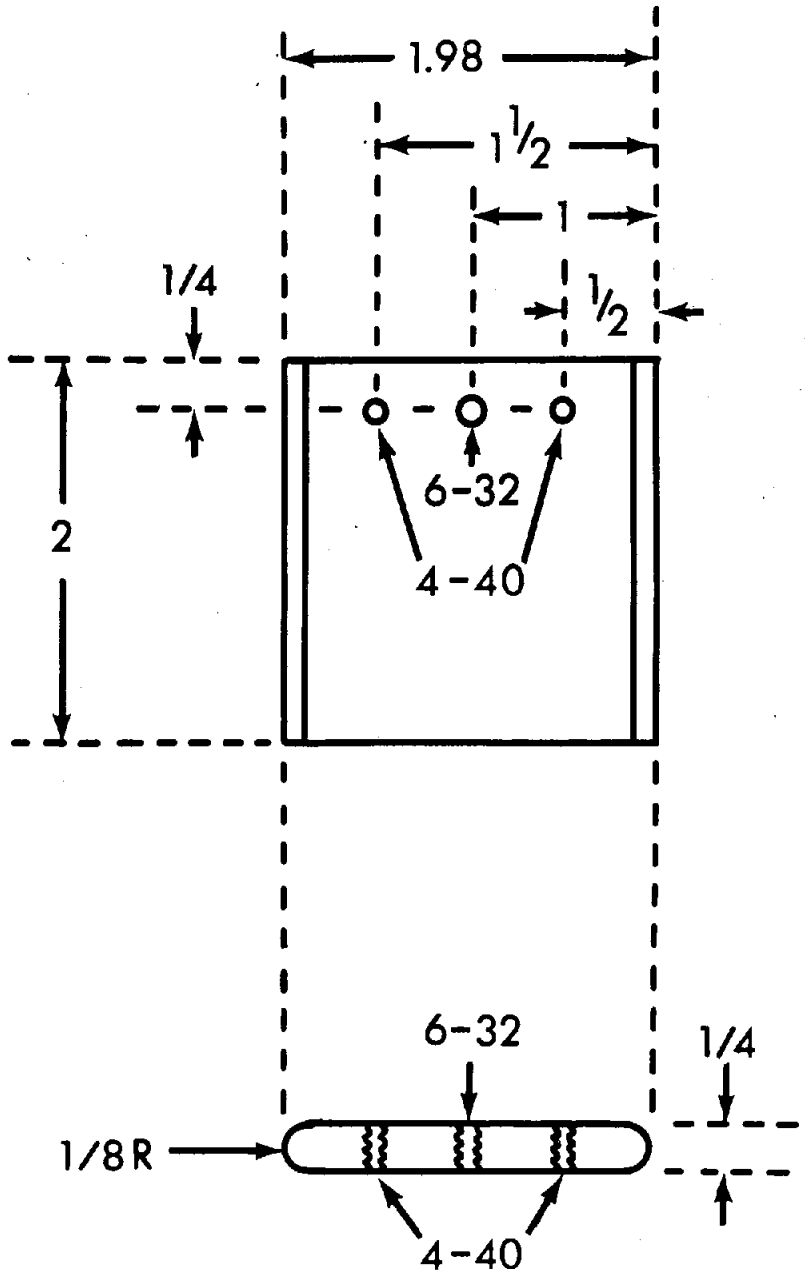

Fig. 11. Brass forming plate for shaping steel springs, 1 ea. Negative No. D76-646.

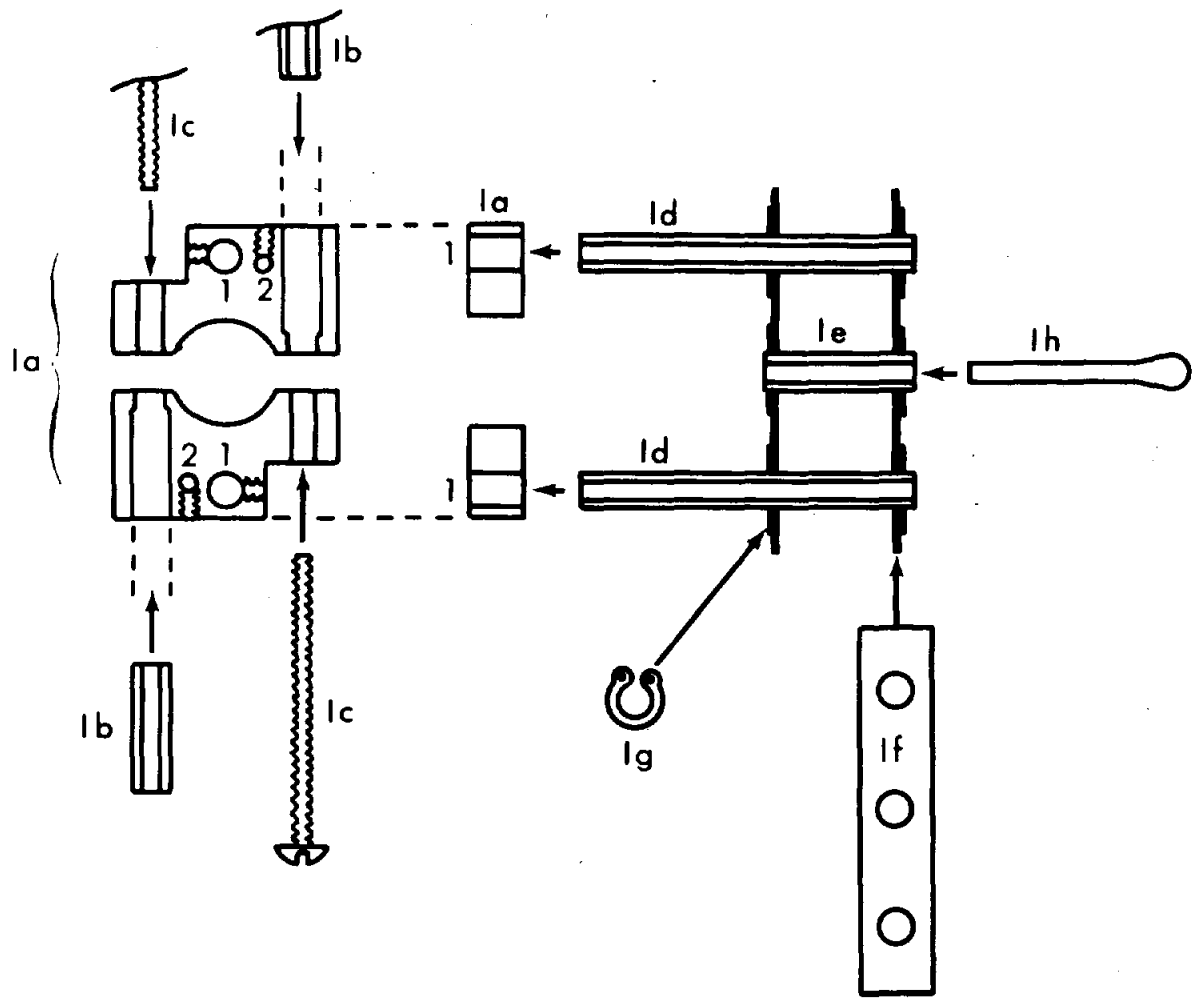

Fig. 12. Heater-gold rod assembly diagram; split clamp, copper, 4 parts (Ia); ceramic tube, 1/8 in. o.d., 1/16 in. i.d., 7/16 in. long, 4 ea. (Ib); screw, 0-80, 1 in. long, with nut, 4 ea. (Ic); ceramic tube, 1/8 in. o.d., 1/16 in. i.d., 1-1/8 in. long, 4 ea. (Id); ceramic tube, 1/8 in. o.d., 1/16 in. i.d., 1/2 in. long, 2 ea. (Ie); stainless steel plate, 4 ea. (If); stainless steel lock ring, tight fit for 1/8 in. dia. tube, 12 ea. (Ig); gold (99.999%) rod, 0.050 in. dia., 3/4 in. long, 2 ea. (Ih). Negative No. D76-647.

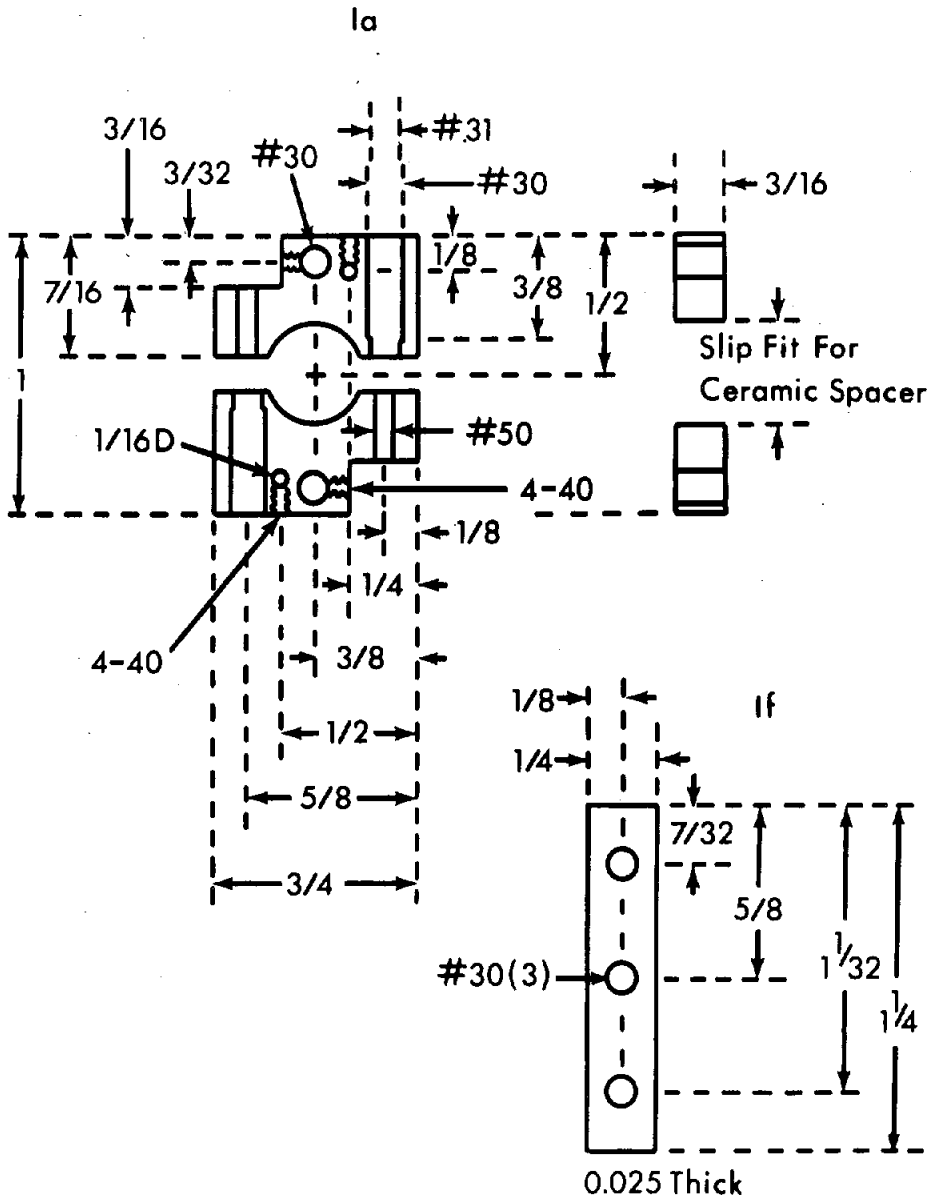

Fig. 13. Split clamp, copper, for 3/8 in. dia. ceramic spacer 4 parts (Ia); stainless steel plate, 4 ea. (If). Negative No. D76-648.

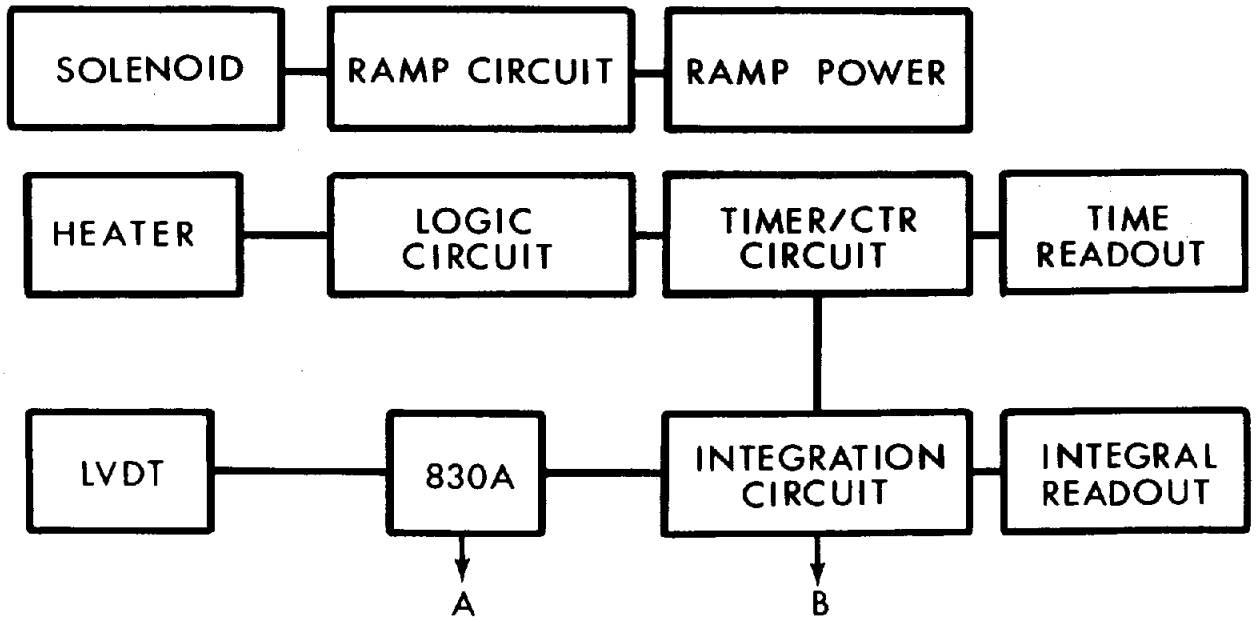

Fig. 14. Block diagram of electronics package: load-time output for chart recorder (A); integral of bond strengths output for chart recorder (B). Negative No. D76-649.

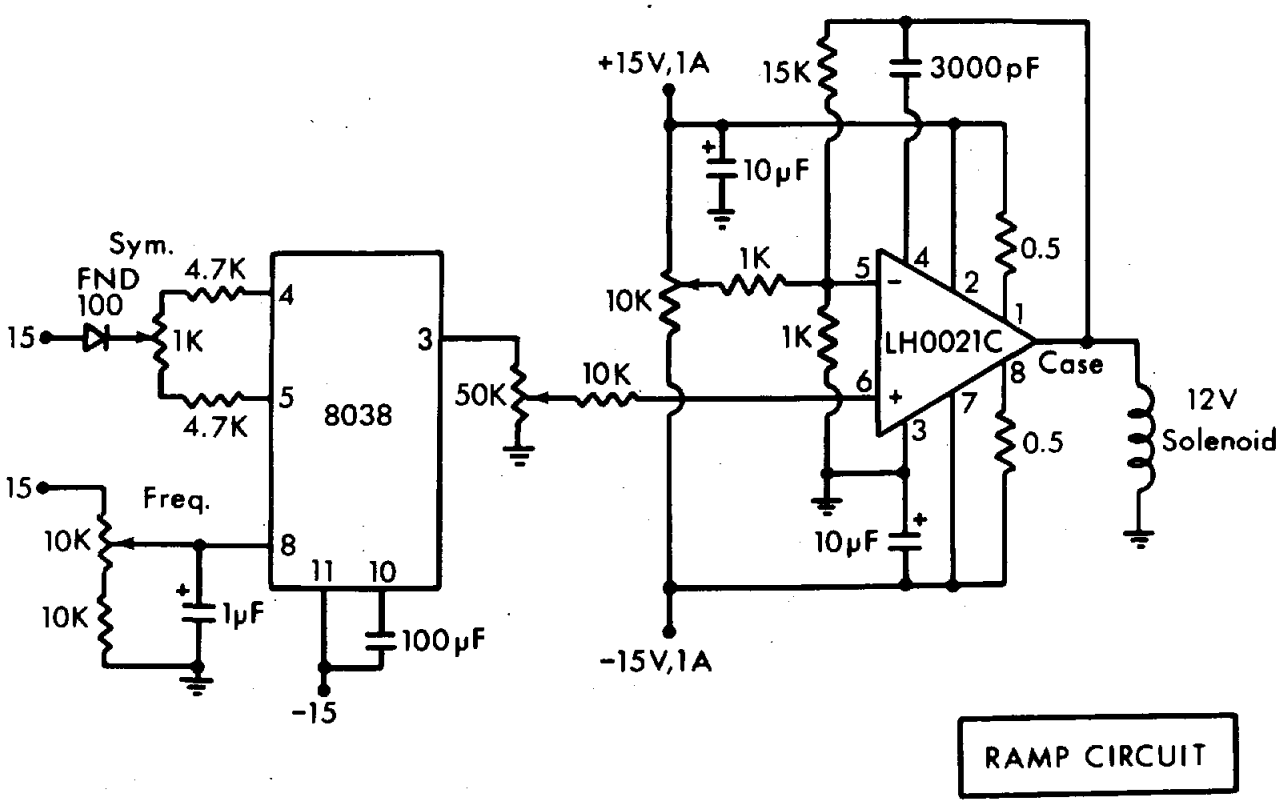

Fig. 15. The ramp circuit provides an alternating positive and negative 12 V, 1 A triangular wave to the solenoid for making and breaking gold-gold bonds at a frequency of about 0.26 Hz. Negative No. D76-651.

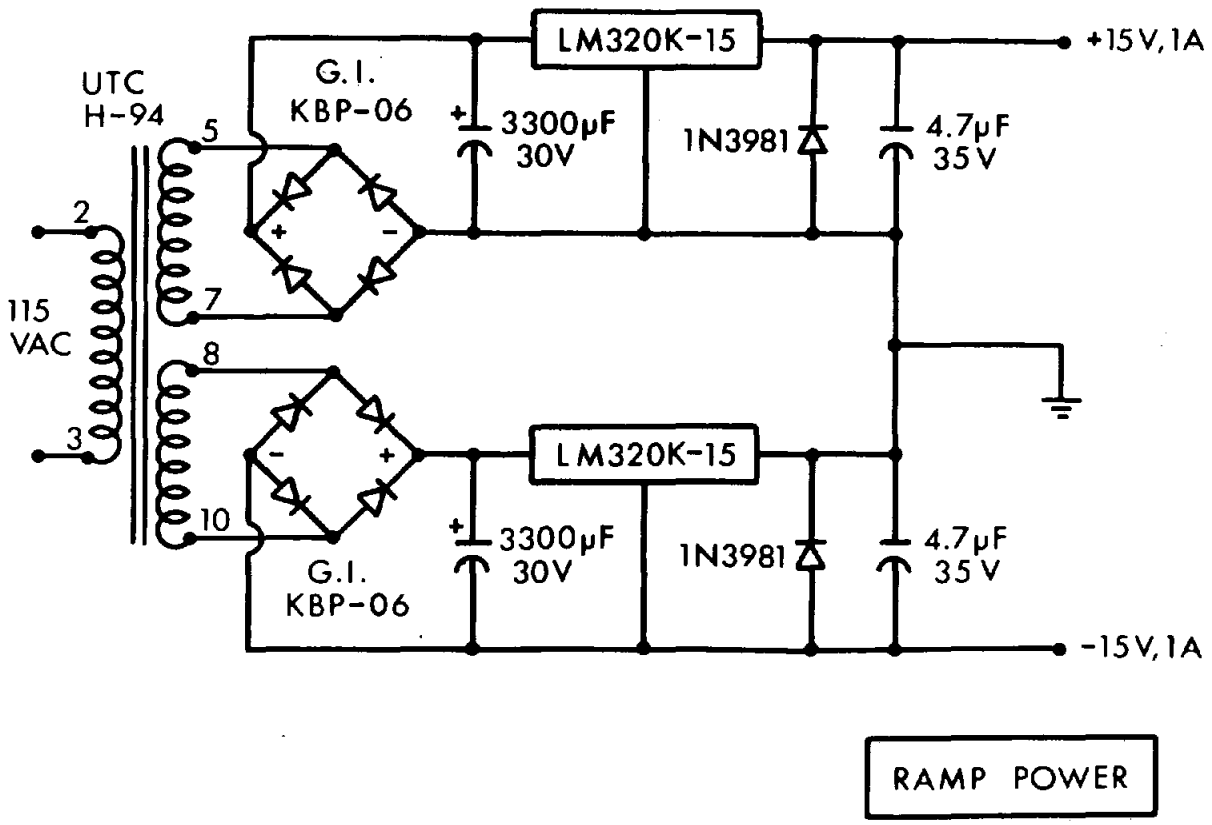

Fig. 16. The ramp power circuit provides ± 15 Vdc, 1 A power to the ramp circuit (Fig. 15). Negative No. D76-650.

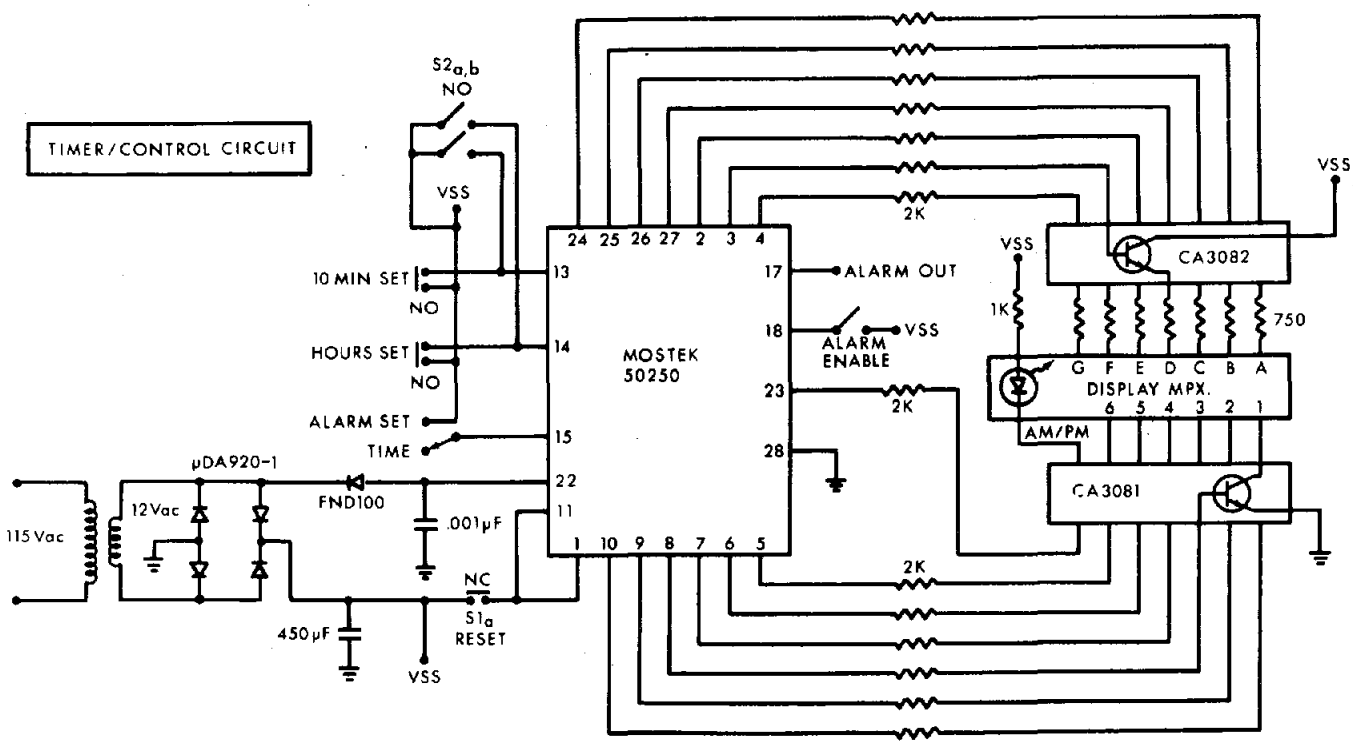

Fig. 17. The timer/control circuit provides signals for the digital clock and, through the logic circuit (Fig. 18), provides automatic control of the heaters in the sensing head. Negative No. D75-1157.

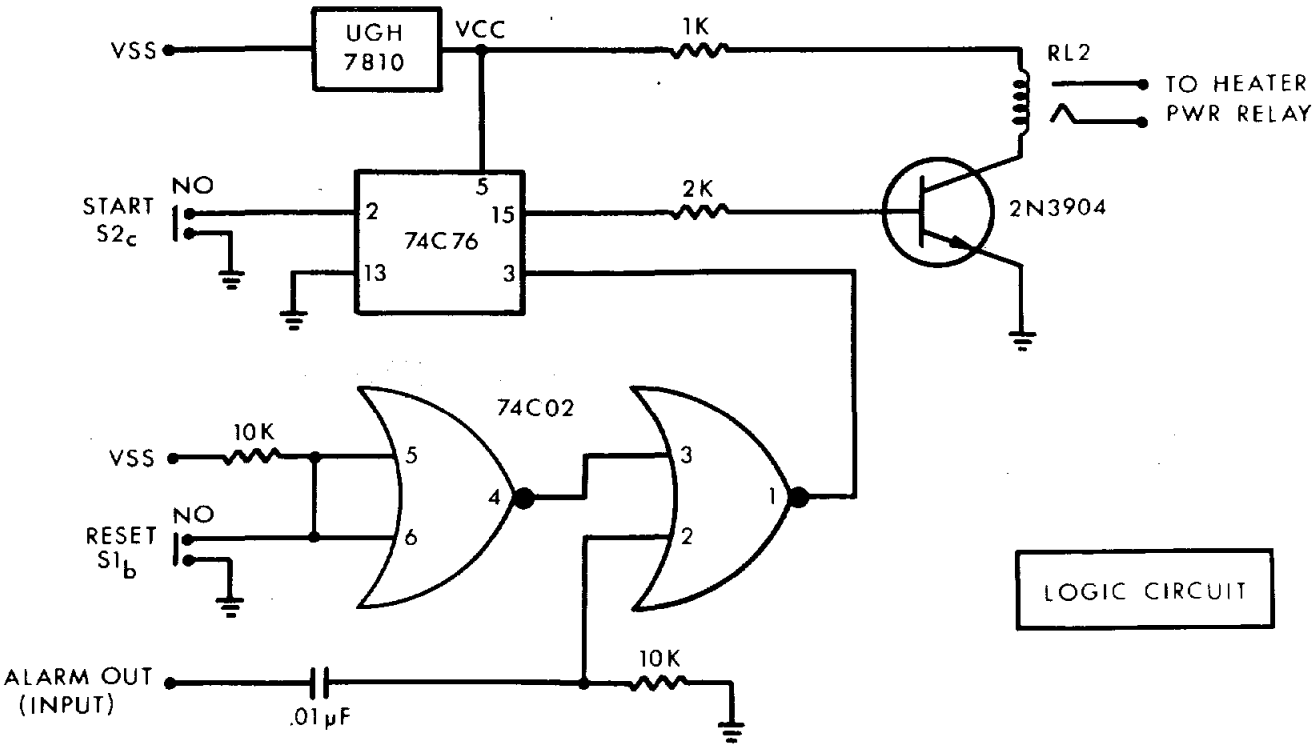

Fig. 18. The logic circuit, in conjunction with the timer/control circuit (Fig. 17), provides automatic control of the heaters in the sensing head. Negative No. D76-637.

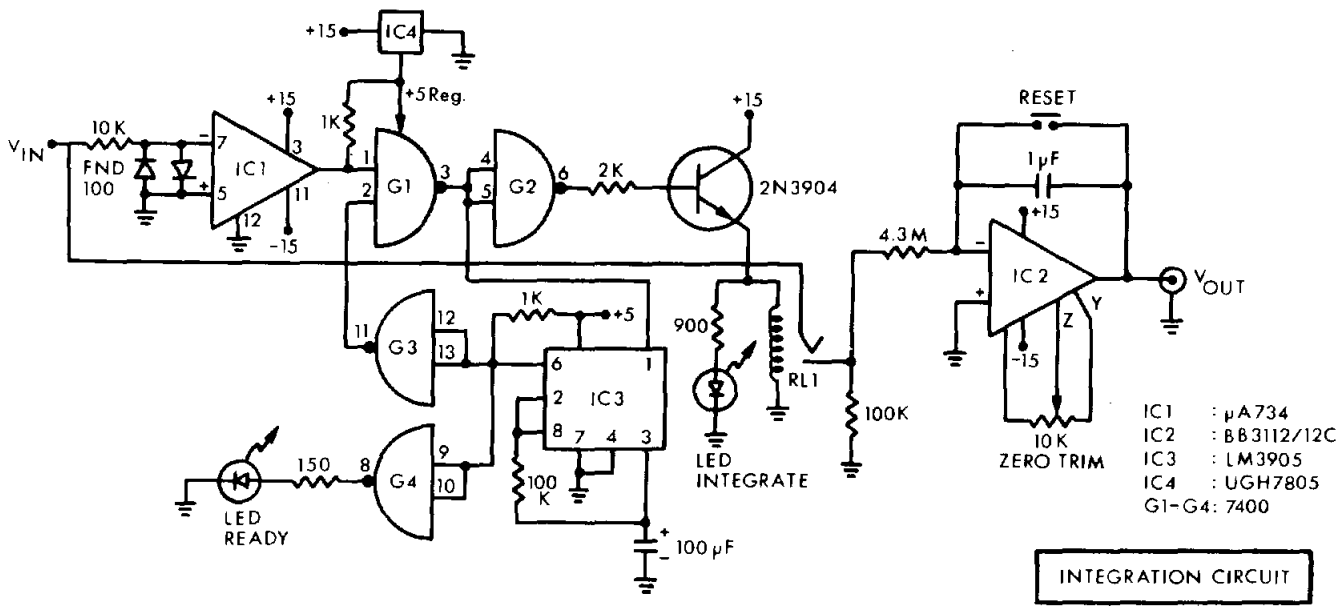

Fig. 19. Signals which are proportional to the bond-breaking loads at the gold surfaces are accepted by the integration circuit. These signals are integrated and accumulated over an extended testing period. The sum is displayed continuously on a digital voltmeter and may be fed to a chart recorder or oscilloscope. Negative No. D75-1156.

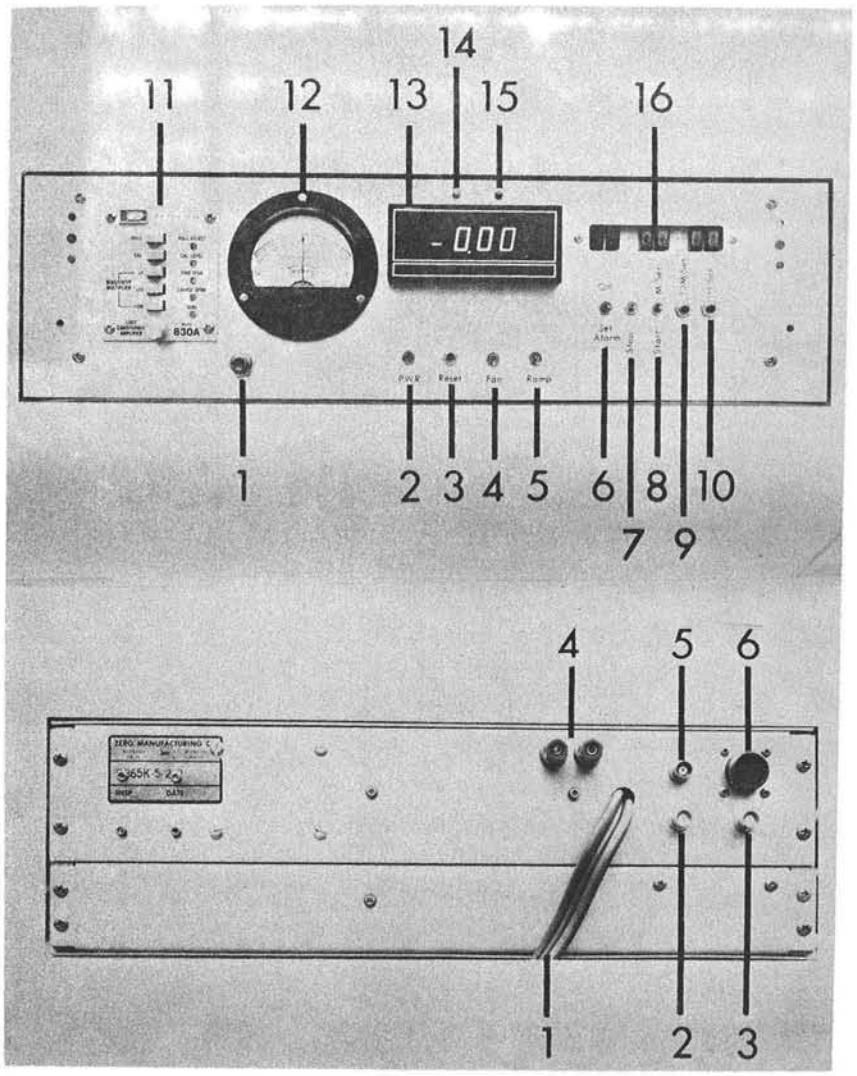

Fig. 20. Electronics package for the contaminant detector. Front panel (upper): 1-inoperative, 2-power switch, 3-integral reset button, 4-inoperative, 5-solenoid ramp switch, 6-alarm circuit set switch (for automatic turnoff of the heaters), 7-stop switch, 8-start and minutes set switch, 9-ten minutes set button, 10-hours set button, 11-LVDT control panel, 12-load meter, 13-digital integral readout, 14-ready light, 15-measure light, 16-digital clock. Rear panel (lower): 1-power cord, 2-recorder connection for integral readout, 3-recorder connection for LVDT load readout, 4-heater power, 5-solenoid ramp power, 6-LVDT connections.

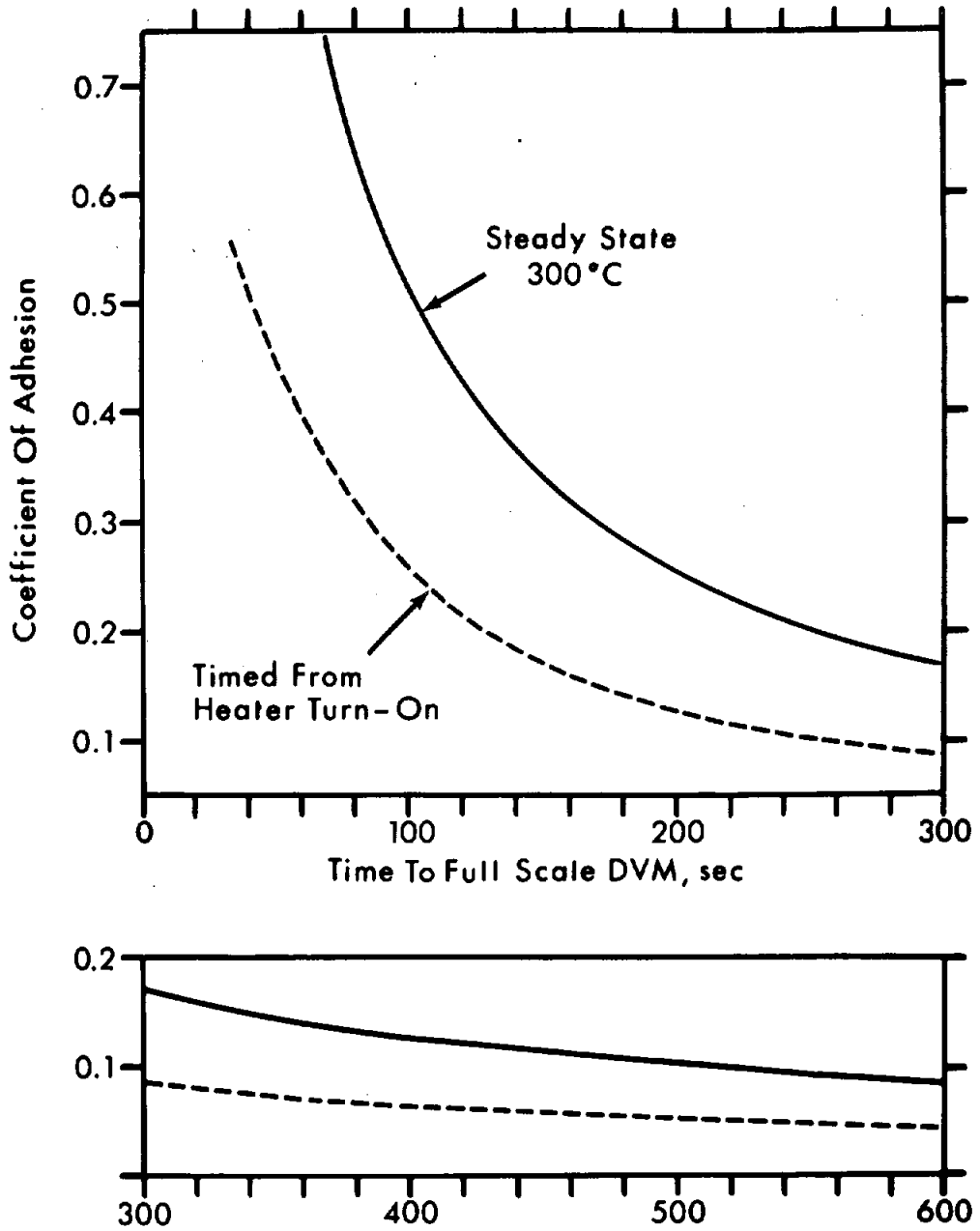

Fig. 21. Calibration curves for obtaining the coefficient of adhesion from the time required for the integral of bond-breaking forces to reach full scale on the digital voltmeter (DVM). Negative No. D76-635.

PARTS LIST

Requirements for the construction of the contaminant detector in terms of raw materials, machining time, electronic components, and approximate costs are listed below. Raw material costs are shown for minimum purchases of one pound and are based on rates of $2.60/lb for aluminum, $3.00/lb for stainless steel, $4.25/lb for brass, and $5.00/lb for copper. Labor cost estimates are based on a rate of $15.00/hour for machining, $18.00/hour for printed circuit design, and $15.00/hour for circuit wiring.

RAW MATERIAL	WEIGHT (lbs)	COST ($)
Aluminum		
1/2 in. plate	0.46	2.60
3/8 in. plate	0.18	2.60
1/4 in. plate	0.57	2.60
2 x 2 x 3 in. bar	1.20	3.12
1 in. dia., 3 in. long rod	0.23	2.60
4 x 1.72 x 0.32 in. channel 12 in. long	2.46	6.40
Brass		
3/8 in. dia., 5 in. long rod	0.17	4.25
1/4 in. plate	0.92	4.25
Copper		
1/4 in. plate	0.12	5.00
Stainless Steel		
5.5 x 0.25 x 0.025 in. sheet		3.00
lockrings, SS-LR-C Physicon Corp., Boston, Mass.		2.00
Platinum Wire		
0.020 in. dia., 10 in. long	----	6.90
Alumina Tubing		
1/8 in. o.d., 1/16 in. i.d., 12 in. long Physicon Corp., Boston, Mass.		1.20

RAW MATERIAL	WEIGHT (lbs)	COST ($)
Ceramic Spacers		
3/8 in. dia., 1/2 in. long 6 ea.	----	1.20
Hook-Up Wire	1	5.00
Solder and Assorted Connectors	----	5.00
TOTAL RAW MATERIAL COSTS		$57.72

MACHINING, SENSING HEAD PARTS

PART	TIME (hours)	COST ($)
B, 1 ea.	1.5	22.50
C, 1 ea.	2.5	37.50
H, 4 ea.	8.0	120.00
K and L, 1 ea.	1.0	15.00
N, 1 ea.	2.5	37.50
O, 1 ea.	2.5	37.50
T, 1 ea.	0.5	7.50
Spring Templates, 2 parts	3.0	45.00
Spring Forming Plate, 1 ea.	1.5	22.50
Spring Grinding, Bending, and Heating, 4 ea.	6.0	90.00
Ia, 4 parts	12.0	180.00
If, 4 ea.	1.0	15.00
Assembly of the Sensing Head	2.0	30.00
TOTAL COST FOR MACHINING AND ASSEMBLY OF THE SENSING HEAD		$660.00

ELECTRONICS PACKAGE

PART	MANUFACTURER	COST ($)
RAMP CIRCUIT		
8038 Waveform Generator/VCO	Intersil	5.25
LH0021C Op. Amp.	National	19.50
A420-065432-00 4HD-C-12VDC Solenoid	Guardian	19.25
1 uF,35V Capacitor	Sprague	0.35
3000 pF,300V "	"	1.04
10 uF,35V " 2 ea.	"	1.18
100 uF,20V "	"	1.02
10K, Variable Resistor, 2 ea.	IRC	3.76
50K, "	"	1.75
1K, "	"	1.86
4.7K, 1/4W, Resistor, 2 ea.	Allen-Bradley	0.24
0.5 Ohm, Resistor, 2 ea.	"	2.80
1K, 1/4W, " 2 ea.	"	0.24
15K, 1/4W, "	"	0.12
10K, 1/4W, " 2 ea.	"	0.24
FND Diode	Fairchild	0.54
RAMP POWER		
UTC H-94, Transformer	United Transformer Co.	27.00
G.I. KBP-06, Diode Bridge, 2 ea.	Gen. Instruments	2.06
3300 uF, 30V, Capacitor, 2 ea.	Sangamo	3.80
4.7 uF, 35V, " 2 ea.	Sprague	0.52
1N 3981 Diode 2 ea.	Unitrode	6.20
LM 320K-15 Voltage Reg. 2 ea.	National	11.90
TIMER/CONTROL CIRCUIT		
2K, 1/4W Resistor, 14 ea.	Allen-Bradley	1.68
FND-100, Diode	Fairchild	0.54
LED, "	Hewlett-Packard	0.60
MDA 920-1, Diode Bridge	Motorola	1.65

ELECTRONICS PACKAGE (CONT.)

PART	MANUFACTURER	COST ($)
TIMER/CONTROL CIRCUIT (CONT.)		
50250, Clock Chip	Mostek	10.00
CA 3082, Common Collector Array	RCA	1.49
CA 3081, 7-Transistor Driver Array,	RCA	1.49
FND-500, Display MPX, 6 ea.	Fairchild	24.00
0.001 uF, Capacitor	Sprague	0.12
450 uF, " (Filter)	"	0.39
H-915, Transformer	UTC	14.85
Switch, Push Button, 3 ea.	Switchcraft	2.46
Switch, Push Button, 2 Circuit	Cutler-Hammer	4.49
Switch, SPDT Toggle	"	3.57
Switch, SPST Toggle	"	2.94
LOGIC CIRCUIT		
1K, 1/4W, Resistor	Allen-Bradley	0.12
2K, 1/4W, "	"	0.12
10K, 1/4W, ", 2 ea.	"	0.24
2N3904, Transistor	Texas Instruments	0.55
PR2B2007H, Relay (RL 2)	Clare	4.65
UGH 7808, Voltage Reg. (8V)	Fairchild	2.30
74C02, Quad Two Input NOR Gate	National	0.49
74C76, Dual JK Flip/Flop	"	1.17
Switch, N.O., Mom. ON, 2 ea.	Cutler-Hammer	12.66
INTEGRATION CIRCUIT		
IC1 uA734 Prec. Voltage Comparator,	Fairchild	4.10
IC2 BB3112/12C, Current Amp.	Burr-Brown	7.00
IC3 LM3905/LM322, Prec. Timer	National	3.75
IC4 UGH 7805, Voltage Reg.	Fairchild	2.10
G1-4 7400, Quad. Pos. NAND Gates	Texas Instruments	0.86
RL 1,PR2B2007H, Relay	Clare	4.65
FND-100, Diode, 2 ea.	Fairchild	1.08

ELECTRONICS PACKAGE (CONT.)

PART	MANUFACTURER	COST ($)
INTEGRATION CIRCUIT (CONT.)		
LED, Diode, 2 ea.	Hewlett-Packard	1.20
2N3904, Transistor	Texas Instruments	0.55
1 uF, 35V, Capacitor	Sprague	0.35
100 uF, 20V, "	"	1.02
Switch, Mom. ON, Reset	Cutler-Hammer	6.33
10K, Variable Resistor, Zero	IRC	1.86
150 Ohm, 1/4W, Resistor	Allen-Bradley	0.12
910 Ohm, 1/4W, "	"	0.12
1K, 1/4W, " 2 ea.	"	0.24
2K, 1/4W, "	"	0.12
10K, 1/4W, "	"	0.12
100K, 1/4W, " 2 ea.	"	0.24
4.3M, 1/4W, "	"	0.12
±15Vdc, 100mA, Power Supply	Analog Devices	55.00
HEATER AND MISCELLANEOUS COMPONENTS		
FT-5, 2.5V, 10A, Transformer, 2 ea.,	UTC	10.00
High Current Relay	Allied Control	8.25
BNC 1094A/U, Connector, 2 ea.	ITTGREMAR	1.08
Binding Post, Connector, 4 ea.	Gen. Radio	1.32
Chassis Connector, 2 ea.	Amphenol	6.00
Chassis with $5\frac{1}{4}$ in. Panel	Zero MFG.	55.00
LINEAR VARIABLE DIFFERENTIAL TRANSFORMER COMPONENTS		
LVDT DF160	Daytronic Corp.	105.00
Type 22S Cable	"	10.00
LVDT Demodulator	"	385.00
TOTAL COST FOR ELECTRONIC PARTS		$875.77

ELECTRONICS PACKAGE (CONT.)

PRINTED CIRCUIT BOARDS (1 ea. for Ramp Circuit, Ramp Power, Timer/Control Circuit, Logic Circuit, and Integration Circuit)

PROCESS	TIME (Hours)	COST ($)
Design, 12 hours ea., 5 boards	60	1080.00
Making Circuit Master, 12 hours ea.	60	1080.00
Printing, 5 boards	--	40.00
Wiring, 5 hours ea., 5 boards	25	375.00
TOTAL COST FOR PRINTED CIRCUITS		$2575.00

COST ESTIMATE SUMMARY

ITEM	COST ($)
Raw Materials	57.72
Machining	660.00
Electronic Parts	875.77
Printed Circuits	2575.00
TOTAL COST	$4168.49

It should be noted that the costs for the printed circuit masters are one-time costs, and that the total cost for the tester will be reduced to about $2000 when these are available (3 of the 5 masters are available now). Also, since OEM prices are listed above for many of the electronic components, the cost of the tester may be somewhat higher when these are purchased through some other contractual agreement.

REFERENCES

1. R. E. Cuthrell and D. W. Tipping, J. Appl. Phys. 44, 3277 (1973).

2. R. E. Cuthrell and D. W. Tipping, J. Appl. Phys. 44, 4360 (1973).

3. R. E. Cuthrell and D. W. Tipping, "Electrical Contacts: Equipment and Mechanics of Closure For Gold Contacts," Sandia Laboratories Report SC-RR-72-0783, December 1972.

4. R. E. Cuthrell and D. W. Tipping, "Factors That Affect the Solid-Phase Bonding of Gold Wire Electrical Leads," Sandia Laboratories Report SLA-73-0535, May 1973.

5. R. E. Cuthrell and D. W. Tipping, Trans. IEEE, PHP-10, 4 (1974).

6. R. E. Cuthrell, J. Vac. Sci. Technol. 11, 1166 (1974).

7. R. E. Cuthrell and D. W. Tipping, "Atmospheric Pollution and Surface Contaminant Detector," Sandia Laboratories Report SAND75-0425, August 1975; In Press, Rev. Sci. Instr. (c. May 1976).

DISTRIBUTION:

2110 E. G. Franzak
2120 G. W. Rodgers
2140 B. L. Gregory
2150 C. M. Tapp
2320 K. L. Gillespie
2350 J. C. Crawford
2520 J. P. Shoup
5000 A. Narath
Attn: 5100 J. K. Galt
5200 E. H. Beckner
5400 A. W. Snyder
5700 J. H. Scott
5800 R. S. Claassen
Attn: 5810 R. G. Kepler
5820 R. L. Schwoebel
5840 D. M. Schuster
5830 M. J. Davis (3)
5831 N. J. Magnani
5832 R. W. Rohde
5833 J. L. Ledman
Attn: J. L. Jellison
5834 D. M. Mattox
5834 R. E. Cuthrell (10)
5834 V. D. Nogle
5834 D. W. Tipping
8266 E. A. Aas (2)
8310 R. H. Meinken
9510 W. C. Kraft
3141 L. S. Ostrander (5)
3151 W. L. Garner (3)
For ERDA/TIC (Unlimited Release)

ERDA/TIC (25)
R. P. Campbell - 3171-1