SAND76-0007

Unlimited Release

SLIFER Measurement for Explosive Yield

Robert C. Bass, Ben C. Benjamin, Harvey M. Miller, Dale R. Breding

Prepared by Sandia Laboratories, Albuquerque New Mexico 87115 and Livermore, California 94550 for the United States Energy Research and Development Administration under Contract AT (29-1)-789

Printed April 1976

Sandia Laboratories

SF 2900 Q(7-73)

When printing a copy of any digitized SAND Report, you are required to update the markings to current standards.

1-2

Issued by Sandia Laboratories, operated for the United States Energy Research and Development Administration by Sandia Corporation.

NOTICE

This report was prepared as an account of work sponsored by the United States Government. Neither the United States nor the United States Energy Research and Development Administration, nor any of their employees, nor any of their contractors, subcontractors, or their employees, makes any warranty, express or implied, or assumes any legal liability or responsibility for the accuracy, completeness or usefulness of any information, apparatus, product or process disclosed, or represents that its use would not infringe privately owned rights.

SAND76-0007
Unlimited Release
Printed April 1976

SLIFER MEASUREMENT FOR EXPLOSIVE YIELD

Robert C. Bass
Field Experiments Division 1111

Ben C. Benjamin
Harvey M. Miller
Dale R. Breding
Geosciences Instrumentation Division 1123
Sandia Laboratories
Albuquerque, New Mexico 87115

ABSTRACT

This report describes the SLIFER (Shorted Location Indicator by Frequency of Electrical Resonance) system used at Sandia Laboratories for determination of explosive yield of underground nuclear tests.

Printed in the United States of America

Available from
National Technical Information Service
U. S. Department of Commerce
5285 Port Royal Road
Springfield, Virginia 22161
Price: Printed Copy $5.50; Microfiche $2.25

CONTENTS

		Page
I.	General Description	7
II.	Down-Hole Hardware	9
	SLIFER Oscillator	9
	SLIFER Cable	12
	Transmission Line	13
	Outer Shield	13
III.	Recording Facility	14
	General	14
	Equipment	14
	Monitors	16
	Fiducial Signal	17
IV.	Calibration, Data Reduction, and Analysis	17
	References	18
APPENDIX A - SLIFER SYSTEM SCHEMATICS AND MECHANICAL DRAWINGS		19

ILLUSTRATIONS

Figure		Page
1	SLIFER Gages, Artist's Conception	8
2	SLIFER Gage System	9
3	SLIFER Osillator Schematic	10
4	Printed Circuit Card and Canister	10
5	SLIFER Chassis	15
6	Plot of Frequency vs. Shorted Length	17

SLIFER MEASUREMENT FOR EXPLOSIVE YIELD

I. General Description

The explosive yield of a nuclear device is one of the more important quantities to be measured in any underground device test. Several methods of determining yield are in common use. Probably the most important of these methods is that using radio-chemistry. Another useful method is by means of the teleseismic signal. A third and less well known technique is by means of the SLIFER.

SLIFER is an acronym from Shorted Location Indicator by Frequency of Electrical Resonance.[1, 2] The technique, which is simply a method of continuously measuring stress-wave velocity in a solid or liquid material, has been in use at the Nevada Test Site and at other test sites since the advent of underground nuclear testing. Numerous events have had SLIFER measurements applied in the emplacement bore hole or in a nearby satellite hole.

Recent developments by R. C. Bass of the Sandia Laboratories and D. D. Eilers of the Los Alamos Scientific Laboratory have improved the technique of yield measurement with an emplacement hole SLIFER.[3] This yield measurement is almost completely independent of the type of geological material in which the detonation takes place and requires only accurate measurement of shock front position as a function of time following the detonation.

The relation between shock position and time takes the form:

$$\frac{\text{Radius}}{(\text{Yield})^{1/3}} = a\left[\frac{\text{Time}}{(\text{Yield})^{1/3}}\right]^b$$

Radius is in metres, yield is in kilotons, and time is in milliseconds with empirically determined values for a and b being approximately 6 and 0.47. The relation appears to be valid for all yields and to be essentially independent of geologic materials in the hydrodynamic regions immediately adjacent to detonations. Calculations for other geologic media support the "universal" nature of the relation.

The approximately 6th power dependance of the yield on the radius suggests that any constant error in shock position data can easily be found permitting accurate yield determination without exact knowledge of the location of the explosive center point. A data analysis scheme

which systematically varies the radius will give the error and hence the correct yield when the sequence of radius-time data points fits the universal curve, that is when the ratio of the standard deviation to the average yield value is a minimum.

Figure 1 is an artist's conception of the SLIFER system as used for hydrodynamic yield measurements on underground nuclear tests.

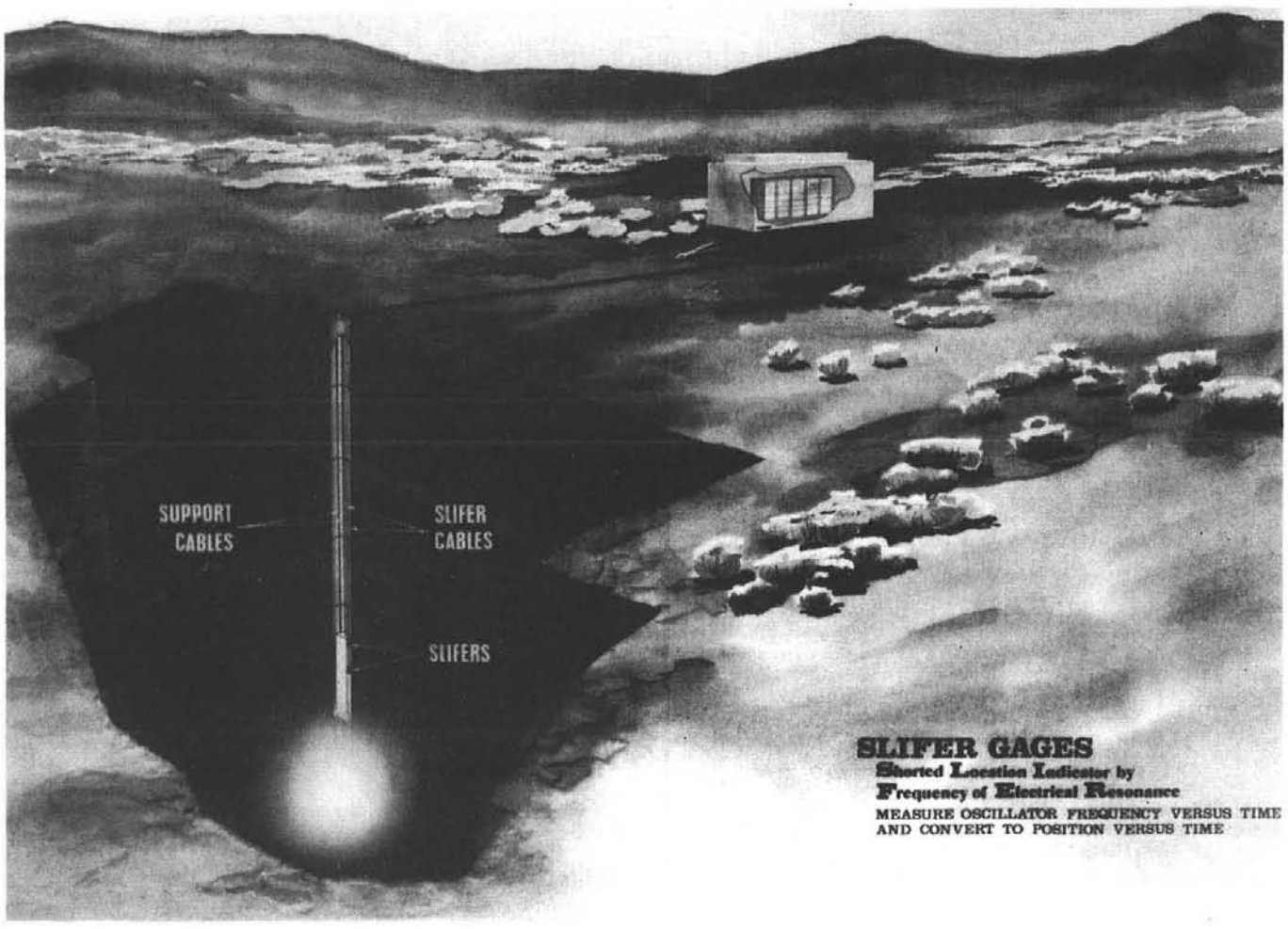

Figure 1. SLIFER Gages, Artist's Conception

The hardware used in SLIFER measurements is quite simple compared with other instrumentation systems in use at the Nevada Test Site. The system, as shown in the block diagram of Figure 2, consists of a shorted length of air or solid dielectric coaxial cable as a component in the tank circuit of an oscillator. The system utilizes the fact that a shorted coaxial cable less than one-fourth wavelength long at the resonant frequency is inductive. As the very strong stress wave proceeds outward from the detonation, the SLIFER cable is crushed. As the short proceeds along the cable, the inductance decreases and the frequency of the system increases. Frequency, the parameter being measured, plotted against time, can be converted to shock front position versus time.

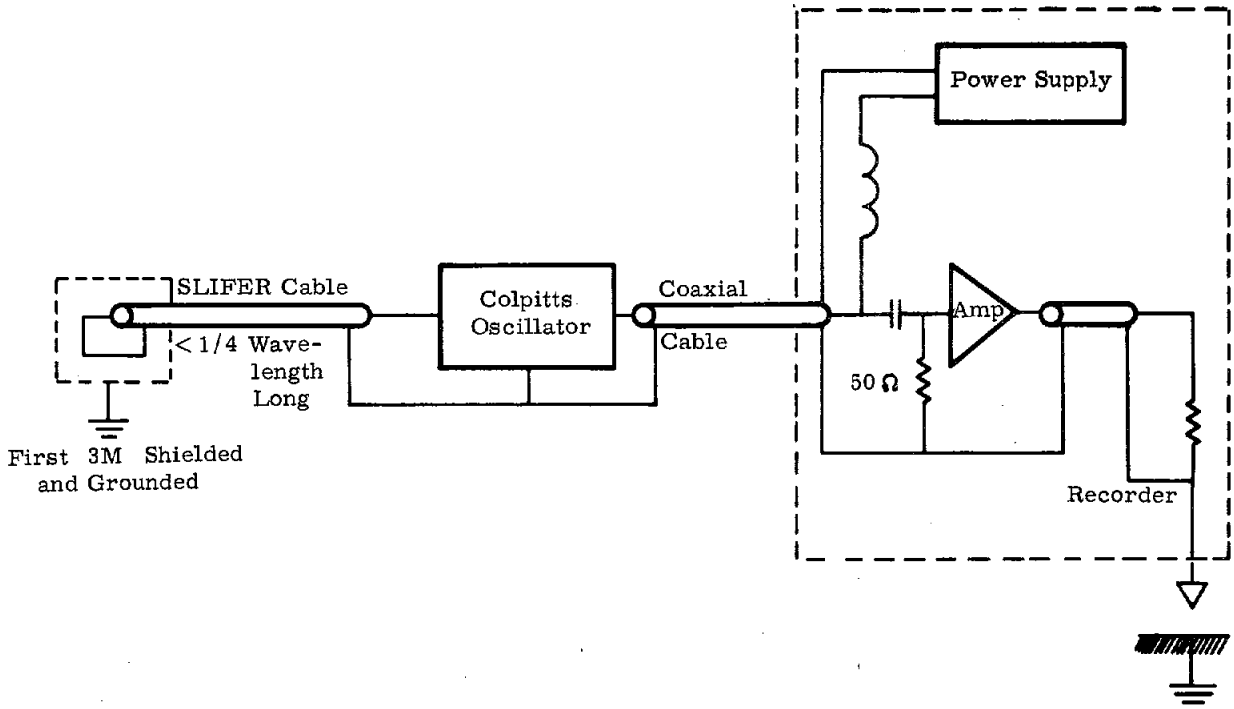

Figure 2. SLIFER Gage System

The field installation is quite simple. The lower end of the SLIFER cable is attached to the down-hole string at a location between 3-15 metres above the device center. While not required, a measurement of this distance is usually made. The only real requirements are that the cable be within the hydrodynamic shock region of the geological containment material and be in a completely stemmed volume. The stemming or backfill material can be a solid or liquid such as sand, concrete, drilling mud, or water. The SLIFER oscillator and the cable both above and below the oscillator are included in the cable bundle to the device. The active portion of the SLIFER cable is sometimes attached 30 to 60 cm away from the cable bundle in order to assure its being completely surrounded by stemming material. In most installations, two SLIFERS are used for redundancy.

The SLIFER system is a simple, low cost, easily installed, accurate yield measuring technique. Schematics and mechanical drawings for the complete system are included as Appendix A to this report.

II. Down-Hole Hardware

SLIFER Oscillator

The SLIFER oscillator, shown schematically in Figure 3 and in the photograph of Figure 4, is of the Colpitts type. The components are mounted on a 3.8 cm wide by 8.9 cm long printed

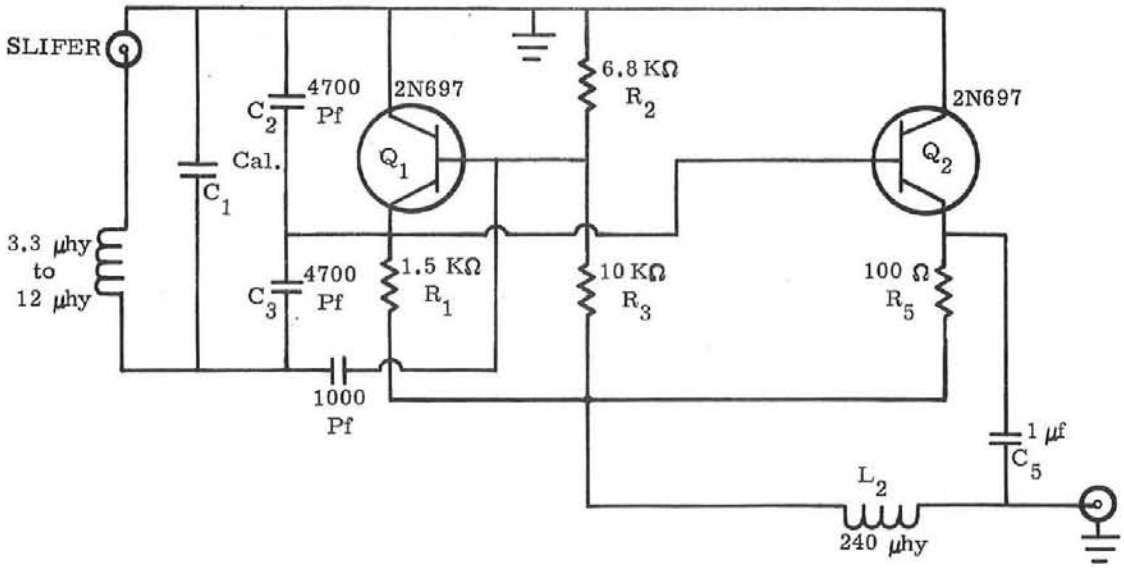

Figure 3. SLIFER Oscillator Schematic

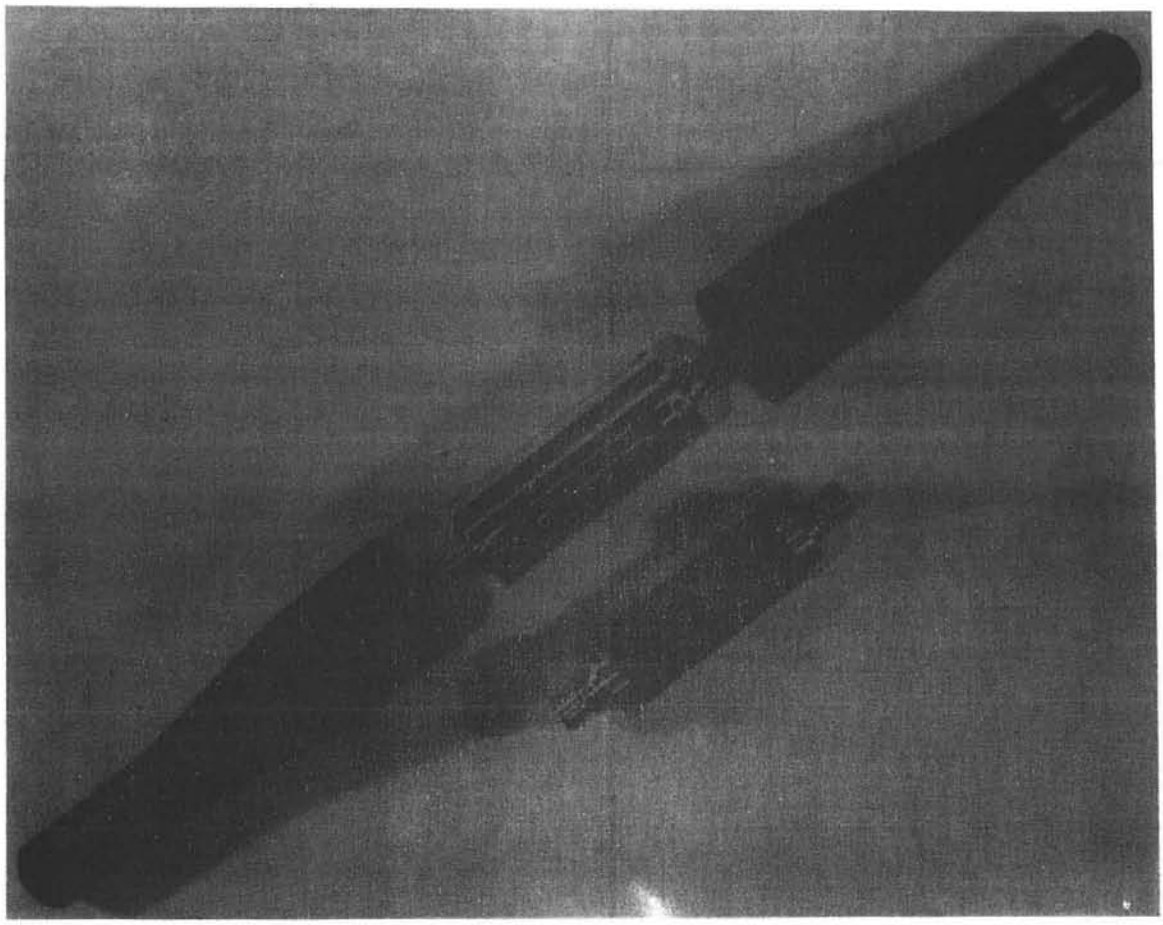

Figure 4. Printed Circuit Card and Canister

circuit card which is mounted in a 5.0 cm diameter by 10.0 cm long aluminum canister with a type HN cable plug (male) on the uphole end, and a type N cable plug on the down-hole end.

The inductance of the SLIFER cable can be calculated by means of the following equation.

$$L_1 = \frac{Z_o}{2\pi f_1} \tan \frac{2\pi l f_1}{V_c} \quad .$$

Where:

L_1 = resonant cable inductance for f_1 (henrys)

Z_o = characteristic impedance of cable (ohms)

l = full length of cable (metres)

V_c = propagation velocity of cable (metres/s)

f_1 = low frequency (full length of cable) (Hz)

After a value of resonant cable inductance has been determined for a given cable length and low frequency, the internal oscillator inductance (L_i) is obtained from

$$L_i = \frac{L_1}{\left(\frac{f_o}{f_1}\right)^2 - 1} \quad .$$

Where:

f_o = highest frequency in the frequency range of operation (resonant cable shorted at the oscillator) (Hz).

When the total inductance is known, the total capacitance required to obtain the desired frequency can be calculated using the following equation:

$$C_T = \frac{\left(\frac{1}{2\pi f_1}\right)^2}{L_T} \quad .$$

Where $L_T = L_1$ + tank circuit inductance. The small capacitor labeled "cal" in Figure 3 may be inserted to "tweak" the oscillator to the desired frequency.

Nominal frequencies used are 800 kHz with a full length of SLIFER cable, to 1200 kHz with the oscillator shorted at the SLIFER input. These frequencies were chosen to be compatible with the 900 ± 300 kHz discriminators available for data playback.

The SLIFER oscillator with its waterproofing neoprene rubber boots and cable end seal is shown on Drawing No. P90344, Appendix A. Normally, strain relief (Kellum) grips are installed on each side of the oscillator assembly. The Kellum grips are then fastened to turnbuckles which are attached to a supporting member located near the oscillator. A Kellum grip may also be used at the shorted end of the SLIFER to provide a tie-off point at the bottom. To provide additional mechanical protection during the downhole and backfill operation, an additional protector assembly, as shown on Drawing No. P73592, Appendix A, may be installed over the entire oscillator assembly.

Tests were conducted by Sandia on two transistor SLIFER oscillators (without SLIFER cables) to determine the effects of temperature vs. frequency.[4] Results indicate a decrease in frequency of less than 2 percent from 0°F (-18°C) to 150°F (65°C).

SLIFER Cable

Various types of cables have been used as SLIFER cables on underground tests. All are approximately 1.25 cm diameter coaxial cables with 50 ohm impedance. Sandia and Los Alamos Laboratories have used the following types of cables:

1. Telcon (air dielectric)
2. Helical membrane (air dielectric)
3. Styroflex (air dielectric)
4. Heliax (air dielectric)
5. RG-213 (solid dielectric)
6. RG-214 (solid dielectric)

The first cable used by Sandia was made by Telcon, a British firm. This type of cable eventually became unavailable and a switch was made to Phelps Dodge helical membrane cable which has similar electrical and mechanical characteristics as Telcon. When helical membrane became a special order cable, a change was made to Phelps Dodge styroflex cable. This is a standard styroflex cable except the thin sheet of polystyrene normally installed between the polystyrene tape helix and the outer conductor is eliminated. This is done to enhance the shorting capability of the cable under shock stress.

Heliax cable, manufactured by Andrews Cable Company, was used in several deep water-filled holes where it was felt that the air dielectric cables normally used would not withstand the higher hydrostatic pressure encountered.

All of the air dielectric cables appear to short effectively at pressures of a few tenths of a kilobar of more. The air dielectric cables have the disadvantages of being difficult to handle and can be easily damaged during the downhole and backfill operation. Hydrostatic pressure tests conducted at Sandia revealed that one-half inch styroflex cable has a shorting threshold of approximately 2700 psi (1.86×10^7 pascals), and heliax 4200 psi (2.89×10^7 pascals).

RG-213 and RG-214 solid dielectric cables are more rugged and easier to handle; however, the crush threshold is about 10 kilobars.[5]

The approximate maximum lengths (one-fourth wavelength) for each type of SLIFER cable presently used are given in Table I. Lengths normally used are from 20 to 60 metres.

TABLE I

SLIFER Cable Data

Cable Type	Velocity (%)	One-Fourth Wavelength			
		800 kHz		1200 kHz	
		Ft.	M	Ft.	M
Helical Membrane	96	295	90	197	60
Heliax	91.4	281	86	187	57
1/2 inch Styroflex	87	267	81	178	54
RG-213, RG-214, RF-1	65.9 ± 2	202	62	135	41

Transmission Line

The cable for both signal and power from the oscillator to the recording facility could be any of the aforementioned types. However, rigid containment requirements dictate the use of a gas blocked cable from the oscillator to the surface. RF-1 and RF-14 cables, manufactured for the Energy Research and Development Administration, are presently used. Electrically, RF-1 is similar to RG-213 or RG-214, and RF-14 is similar to Phelps Dodge 1/2-inch foamflex. Both cables are gas blocked to prohibit leakage of radioactive gases to the atmosphere.

Specifications for RF-1 cable require the cable to withstand a pressure of 3100 psi (2.137×10^7 pascals) at a temperature of not less than 121°C for 48 hours.[6]

Outer Shield

On the shorted end of the SLIFER cable, a three-metre-long outer shield is installed to minimize the effects of electromagnetic pulse (EMP) noise generated at zero time. The shield aids the system recovery after zero time preventing a prolonged loss of data. This shield is earth grounded to the downhole structure but is electrically isolated from the SLIFER cable.

III. Recording Facility

General

The SLIFER recording facility is usually housed in a trailer or an air transportable shelter. It requires an external 25 kW, 60 Hz, three-phase, 208-volt generator for power during the event. Prior to the event, the facility is normally powered from a commercial source. Generator fuel service as well as generator mechanics are required in case of mechanical problems. Support personnel are required to lay cables and assist with the downhole operation. In the event the recording facility must be located near surface zero, shock mitigation may be required to assure survival of equipment. Radio and/or telephone communications with the control center are also required. The facility is usually operated by two electronic technicians.

Equipment

Most of the equipment required in the recording trailer is commercially available. However, the SLIFER chassis itself is unique to the measurement. The Sandia SLIFER chassis is a power supply and amplifier system for five SLIFERs. The unit is shown in Figure 5.

The schematic for the SLIFER chassis is shown on Drawing No. CKN87742, Appendix A. Several features incorporated in the chassis are no longer used with the present SLIFER system, i.e., a mixer system which mixes the incoming frequency with an internal crystal controlled frequency to obtain a lower difference frequency, and a remotely operated relay in the SLIFER oscillator which shorts out the SLIFER cable at the oscillator to obtain the high frequency. Also, the chassis included a means by which the zero fiducial signal may inhibit the SLIFER oscillator signal for a short time. The main function of the chassis as now used is to provide 56 mA of constant current for the SLIFER oscillator and amplify the incoming signal to approximately one volt rms for the magnetic tape recorder.

The printed circuit cards labeled card B, A' and C' are used with the 800 to 1200 kHz SLIFER oscillator. There is only one card B per chassis. It's main purpose is to provide a regulated -24 volts for circuits on the A' cards, one for each SLIFER. The A' cards provide a constant current of 56 mA at about 14 volts for the SLIFER oscillator.

Another piece of equipment sometimes used but not commercially available is the automatic program timer. This unit requires a test site timing closure signal, e.g., -5 minutes, then counts down and provides internal relay closures for starting tape recorders of other functions required in the unmanned recording facility. In case the countdown signal is interrupted and the event is put in a "Hold" status, a "hold" signal (closure) is required to stop the program timer until the countdown is resumed when the "hold" signal is released. Also, a "reset" signal is required to reset the program timer to its original starting time in the event the countdown sequence is started over. The recording facility can also be operated remotely without use of the program timer if a sufficient number of test site signals (closures) at the required times are available.

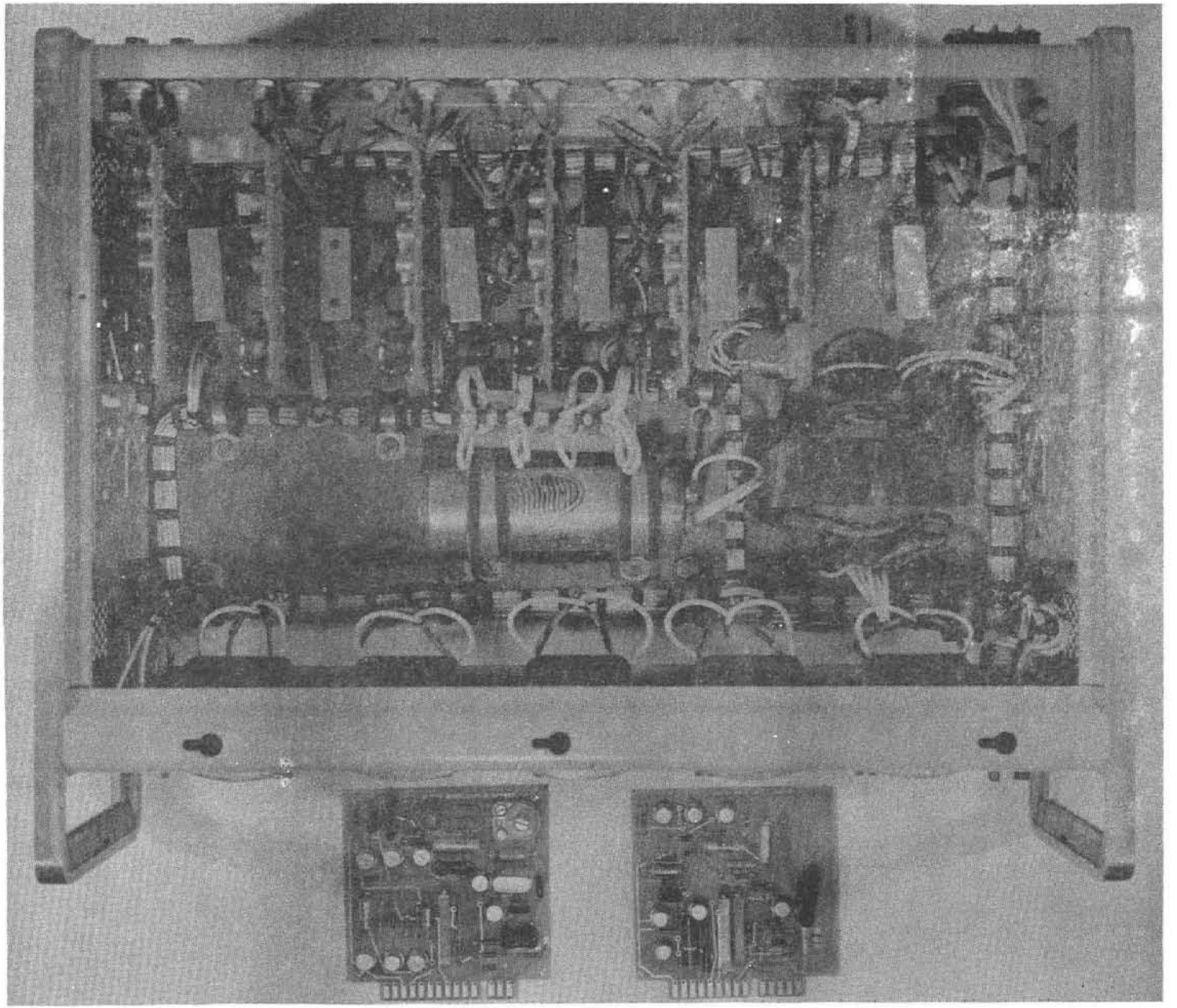

Figure 5. SLIFER Chassis

A listing of all equipment follows. (At least two, assuming one spare, of each critical item are listed.)

2 - 1.5 MHz tape recorders

2 - Oscilloscopes with cameras (HP-180 w/1805A and 1821A)

2 - Digital freq. and time interval counters/dig. volt meters HP5326B

2 - Sandia SLIFER chassis, shop made

2 - Pulse generators, HP214A

2 - Engine generators, 25 kW

1 - Trailer or shelter, portable, with utilities

2 - Time code generator

2 - WWV receivers

4 - Radios for local communication

2 - Countdown receivers

2 - Hi potters, HP4329A

1 - Time mark generator (Cal scopes) HP226A

2 - Variable oscillators, HP3312A

2 - Time delay generators, Rutherford

3 - Counter (HP5345A)

2 - Program timer, shop made

The oscilloscopes with cameras are used to check out the transmission link and for other trouble shooting. The digital frequency meter/digital volt meters are used to adjust the SLIFER oscillator frequencies, and for general trouble shooting. The pulse generators are used in conjunction with the oscilloscopes and cameras to check the SLIFER transmission link. The generators are for electrical power. The time code generators provide a time base for the tape recorded data. The WWV receivers are used to adjust the time code generators to world time. The countdown receivers are used for communications to the test director. The hi potters are used to test all of the coaxial cables and their insulation. The time mark generators are used to calibrate the time base on the oscilloscopes and are used in data reduction. The variable oscillator is used to set up the tape machines, and as a general-purpose test device. The time delay generators and counters are used in field playback of SLIFER data.

Monitors

In order for the test director to know the status of the recording system prior to the detonation, a monitor system is often used. This system assures the test director that the trailer has power and the tape recorder is operating. Relay closures are provided by the equipment when operating properly.

Fiducial Signal

A zero time fiducial signal is recorded along with the SLIFER signal. This signal may be transmitted by hard wire or by radio. It usually consists of a very short electrical pulse from the device firing system.

IV. Calibration, Data Reduction, and Analysis

The oscillator is calibrated by means of a SLIFER cable of the same type and length to be used during the event. Small holes are drilled in the cable at three-meter intervals which permit shorting of the outer conductor to the inner conductor. The oscillator to be used during the event is connected to the cable and a plot of frequency versus shorted length is made (Figure 6). These data points are then compared with a computer generated theoretical frequency versus shorted length curve for the type of cable being used to verify validity of the calibration.

The magnetic tapes containing the SLIFER data are normally returned to the data reduction facility at Sandia Laboratories. The recorded data are played back through a 900±300 kHz discriminator, a frequency-to-voltage converter. The discriminated output is digitized and plotted. From this plot, zero time, to which all times are related, is determined from the first zero time EMP disturbance noted on the plot. A computer program is then used to convert the digitized frequency versus time data to distance versus time data. These data are then used in an iterative computer process to determine yield by means of the universal shock position versus time equation given in Section I.

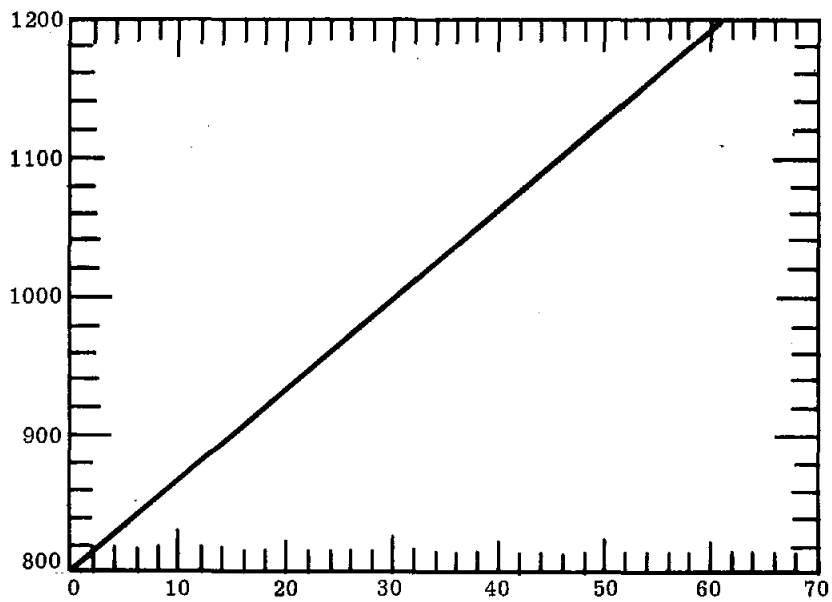

Figure 6. Plot of Frequency vs. Shorted Length

References

1. M. Heusinkveld and F. Holtzer, "Method of Continuous Shock Front Position Measurement," Review of Scientific Instruments, Vol. 35, No. 9, September 1964, p. 1105.

2. F. Holzer, "Measurement and Calculations of Peak Shock-Wave Parameters from Underground Nuclear Detonations," Journal of Geophysical Research, Vol. 70, No. 1, February 15, 1965, p. 893.

3. Measurement of Yield of PNE's, RS 3171-1/1348, Series Z, SNSI, dated March 24, 1975, LASL Title J-14-701.

4. H. W. Gilbert, SLIFER Oscillator Temperature Tests, Organization 7300 Environmental Test Report, June 23, 1967, T-30712, File No. 0-3.

5. R. C. Bass, H. L. Hawk, Substitution of RG-8 Coaxial Cable As The Resonance Cable in SLIFER Measurement Systems, Sandia Laboratories Technical Memorandum, SC-TM-64-1280, October 1967.

6. Specifications for Special High Temperature, High Pressure, Water and Gas Blocked RG-213/U Type Coaxial Cable, AEC-NV-RF-1, Revision 1 (Preliminary), May 24, 1968.

APPENDIX A

SLIFER SYSTEM SCHEMATICS AND MECHANICAL DRAWINGS

Drawing No.	Issue	Description
N87742	3	SLIFER Signal Cond Drawer, Assembly
CKN87742	3	Schematic
N88443	1	Chassis
N88412	4	Sub-chassis Assembly
N88411	2	Sub-Chassis
N88413	2	Bracket
N88414	1	Heat Sink
N92950	1	Heat Sink
N84707	3	Mixer, Card A, PCB Assembly
CKN84707	2	Schematic
CMN84707	3	Printed Circuit Master, CM2
N84708	3	Mixer, Card A', PCB Assembly
CKN84708	2	Schematic
CMN84708	2	Printed Circuit Master, CM1
P90344	A	SLIFER Gage, Assembly
P70365	A	Cable Seal, Type HN Conn, RG-213 Cable
P70366	A	Cable Seal, Type N Conn, Heliax Cable
P70367	C	Cable Seal, Type HN Conn, RF-1 Cable
P70368	B	SLIFER End Seal
P87992	A	End Cap, Type HN
P90338	A	Adapter, Center Cond., Type HJ4-50
P90339	A	End Cap, Type N
P90340	A	Ring
P90341	A	Adaptor, Outer Cond., Type HJ4-50
P90342	A	Cable Short, Type HJ4-50
T08944	A	Cable Short
P90343	A	Oscillator Can
N83412	3	Oscillator Type C, PCB Assembly
CKN83412	1	Schematic
CMN83412	2	Printed Circuit Master, CMB
N83420	3	Oscillator, Type C', PCB Assembly
CKN83420	2	Schematic
CMN83420	2	Printed Circuit Master, CMB
P73592	B	Oscillator Protector Assembly
P72495	B	Casting, Top
P72440	C	Casting, Bottom
N83493	3	Mixer, Card B, PCB Assembly
CNK83493	2	Schematic
CMN83493	3	Printed Circuit Master, CM2

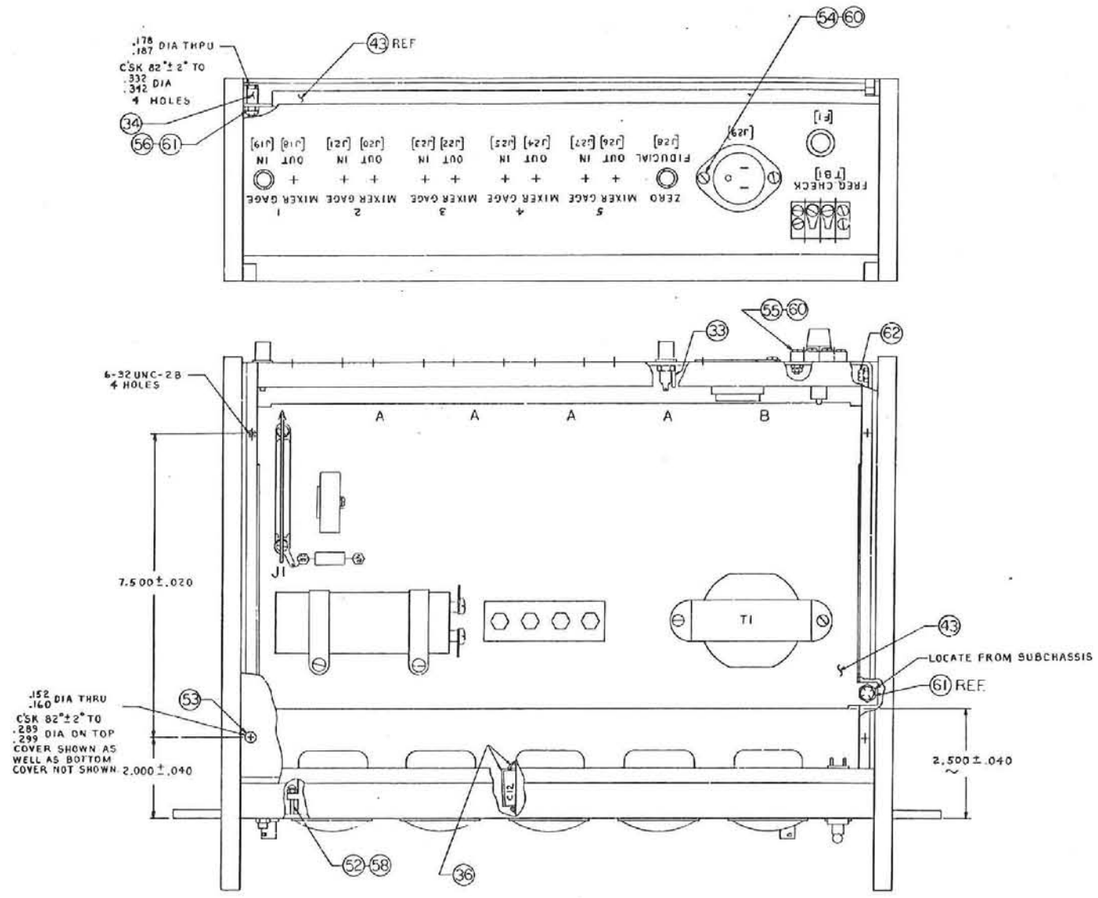

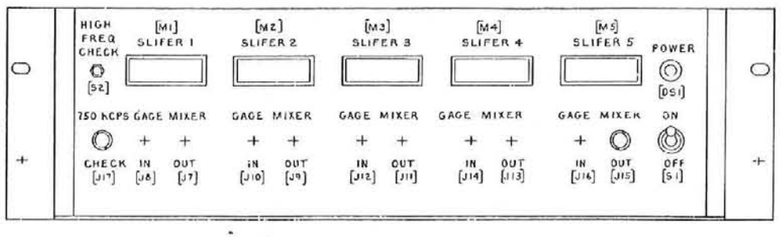

NOTES

NOTES:

1. DOCUMENTS REQUIRED FOR THE FABRICATION AND ACCEPTANCE OF THIS PART.
2. MARK PER 8998100, CLASS E-2, .12 INCH CHARACTERS.
3. INSTALL VINYL INSULATION SLEEVING PER 9G205031.
4. COMPONENTS NOT IDENTIFIED BY 1B1N NUMBERS ON THE ASSEMBLY ARE LOCATED IN THE LIST OF MATERIALS BY REFERENCE DESIGNATIONS.
5. COMPONENT DESIGNATIONS APPEARING ON COMPONENTS OR APPEARING IN BRACKETS ( ) ARE FOR REFERENCE ONLY AND ARE NOT TO APPEAR ON UNIT.
6. SOLDER AS PER 8913000.
7. MAY BE OBTAINED FROM:
   - A. HOWARD B. JONES DIV., CINCH MFG. CO., CHICAGO 24, ILLINOIS.
   - B. BUSSMAN MFG. CO., DIV. MCGRAW-EDISON CO., ST. LOUIS 7, MO.
   - C. ARROW-HART & HEGEMAN ELECTRIC CO. HARTFORD 6, CONN.
   - D. H. H. SMITH, 2534 NOSTRAND AVE., BROOKLYN, N.Y.
   - E. DIALIGHT CORP., 80 STEWART AVE., BROOKLYN 37, N.Y.
   - F. AMPHENOL BORG ELECTRONICS CORP. 1830 S0.54TH, CHICAGO 50.ILL.
   - G. SWITCHCRAFT INC., CHICAGO, ILLINOIS.
   - H. MINNEAPOLIS-HONEYWELL REGULATOR CO., PRECISION METER DIV. 4525 NO. 7TH AVE. PHOENIX 13, ARIZONA.
   - J. ALPHA WIRE CORP., 200 VARICK ST., NEW YORK 14, N.Y.
   - K. ELASTIC STOP NUT CORP.OF AMERICA,UNION,N.JERSEY
   - L. TRANSITOR ELECTRONICS CO., WEST RD., BENNINGTON, VT.
   - M. MICRODOT INC., 220 PASADENA AVE. S., PASADENA, CALIF.

DRAWN AGENCY PART OR CONTROL NO

REVISIONS

SYM	SHEET ZONE	DESCRIPTION	DATE	CHKD	DWN
1		NH DYKEMA 2213-5 2-26-65			
2		ITEM 32 WAS T-20, NH EBY CO. CO. NHD 3-29-65			
3		ELASTIC STOP NUTS ADDED, COVER INFORMATION NHD 6-9-65			

8		NUT, 10-24NC-3B, ELASTIC STOP, HEX HD	7K	63
4		NUT, 8-32NC-3B, ELASTIC STOP, HEX HD	7K	61
4		NUT, 6-32NC-3B, ELASTIC STOP, HEX HD	7K	60
				35
10	MS35649-42	NUT, 4-40UNC-2B, HEX		58
				57
4	MS35190-254	SCREW 8-32UNC-2A 7/8 LG. FLAT HD		56
4	MS35206-231	6-32UNC-2A 5/16 LG.		55
2	MS35206-230	5-32UNC-2A 1/2 LG.		54
4	MS35190-236	6-32UNC-2A 3/8 LG FLAT HD		53
10	MS35206-220	SCREW, 4-40UNC-2A, 7/8 LG.		52
				51
				50
				49
				48
				47
1	C4187742	SCHEMATIC, SLIFER SYSTEM	1	46
1	N83493	SLIFER, MIXER, CARD B, ASSEMBLY		J6
1	N84707	SLIFER, MIXER, CARD A, ASSEMBLY		J1-5
1	N88412	SLIFER, SUBCHASSIS ASSEMBLY		43
1	N84708	SLIFER, MIXER, CARD A, ASSEMBLY		42
				41
				40
AR		WIRE NO. 20 SIZE, WHITE, MFG. NO. 1888	7J	39
AR		WIRE, NO. 20 SIZE, ORANGE MFG. NO. 50-3804	7H	38
				37
AR	MIL-I-7444	SLEEVING, VINYL, ELECTRICAL	3	36
				35
4		SPACER, BINDS, NO. 2106 3/8 LG. NOT TAPPED	3D	34
21		TERMINAL LUG, SOLDER POT, NO. 1410-8	3D	33
				32
1		FUSEHOLDER, HRP TYPE	3D	XF1
1		FUSE, NOL1, 250 VOLT 1 AMP SLO-BLO.	3D	F1
1		TERMINAL STRIP, 2 CONTACT, NO. 2-140-Y	7A	TB1
1		SWITCH, PUSH, NO. 953, RED BUTTON	7G	S2
1		SWITCH, 3 AMP. 250V. BALL HANDLE, TOGGLE	7C	S1
				M5
5		METER, 0-1 MA, MODEL M21	7H	THRU
				M1
1		SOCKET, NO. 269-7841-1421	7C	XDS1
1		LAMP, NE-2E	7C	DS1
				J28
22	UG-1094A/U	CONNECTOR, CO-AXIAL, RECEPTACLE		THRU
				J7
1		CONNECTOR, 15A, 125V MALE, TYPE 61-M10	7F	J28
				J18
1		CAPACITOR 0.1 UF		C17
1		CAPACITOR 100 UF 35V NO. 6421	7L	C12
1			7L	C10
1			7L	C8
1			7L	C6
1		CAPACITOR, 100 UF 35V NO. 6421	7L	C4
				3
				2
				1
X	5G167001	SLEEVING	3	4
X	9913001	SOLDER	4	3
X	9919100	LETTERING	7	2
X	9900100	PROCESS STANDARD	1	1

MFR CODE	REF. DES.	REF. DES.	REF. DES.	TRANSACTION NUMBER	DESCRIPTION	MFR'S	MFR'S PART NO.	ITEM

LIST OF MATERIAL

SIZE E | CODE IDENT NO. | DRAWING NO. | REV 3 | SHEET MODEL | CLASSIFICATION CATEGORY | DWG CLASSIFICATION LEVEL: UNCLASSIFIED | PART CLASSIFICATION: UNCLASSIFIED

DWG AGENCY APPROVALS | DWG AGENCY NUMBER

TITLE: SLIFER SYSTEM ASSEMBLY

SIZE E | DWG NUMBER N87742 | SCALE | SHEET 1 OF 1

NOTES

1. CAPACITOR VALUES ARE IN MICROFARADS.
2. UNDERLINED DESIGNATIONS INDICATE FRONT PANEL MARKINGS.
3. OVERLINED DESIGNATIONS INDICATE REAR PANEL MARKINGS.
4. ▭ INDICATES SUB-CHASSIS MARKINGS.
5. ⏚ INDICATES CHASSIS GROUND.
6. ▽ INDICATES CIRCUIT RETURN.

DESIGN AGENCY PART OR CONTROL NO	REVISIONS					
	ISSUE	LTR	SHEET ZONE	DESCRIPTION / AUTHORIZED BY	DATE	CHKD	APVD
	1			HH DYKEMA 2213 5 2-8-65	"		
	2			REF. TORS 1 THRU 6 REM PIN M & N IN J1 THRU J5 WERE NOT USED HHD 6-14-65	"		
	3			CR1 WAS CR2, CR2 WAS CR1 HHD 2213-5 8-30-65	"		

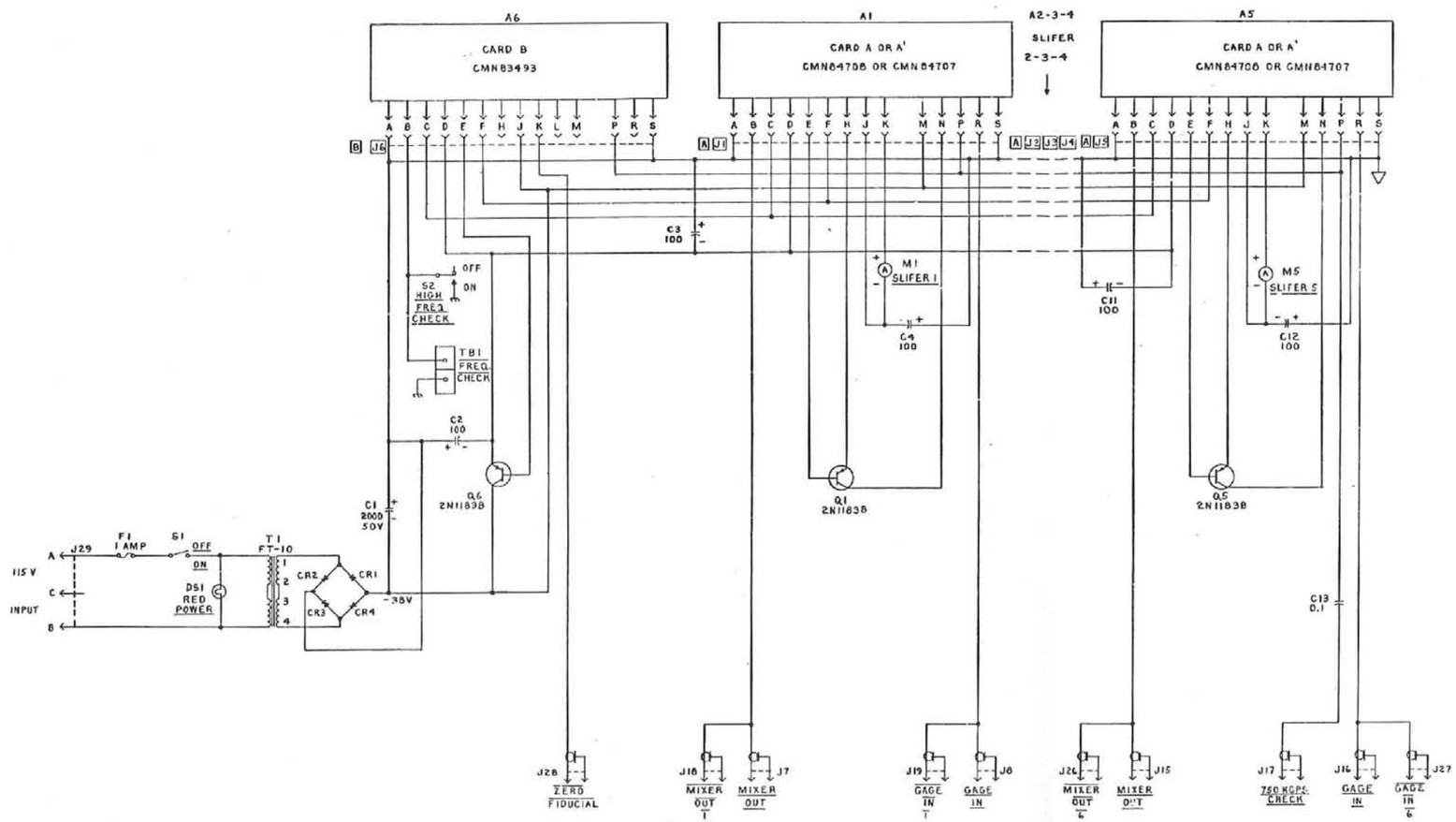

SCHEMATIC, SLIFER SYSTEM

UNCLASSIFIED

UNCLASSIFIED

E CK17-7742

NOTES

1. LIMITS OF ACCEPTABLE WORKMANSHIP ARE DEFINED IN 9900000.
2. MAY BE OBTAINED FROM HEWLETT-PACKARD CO. 1501 POPE MILL RD., PALO ALTO, CALIF.

DESIGN AGENCY: / PART OR CONTROL NO	REVISIONS					
	ISSUE	SHEET ZONE	DESCRIPTION	DATE	CHKD	ENGR
	1		HM DYKEMA 2213-5 2-26-69			

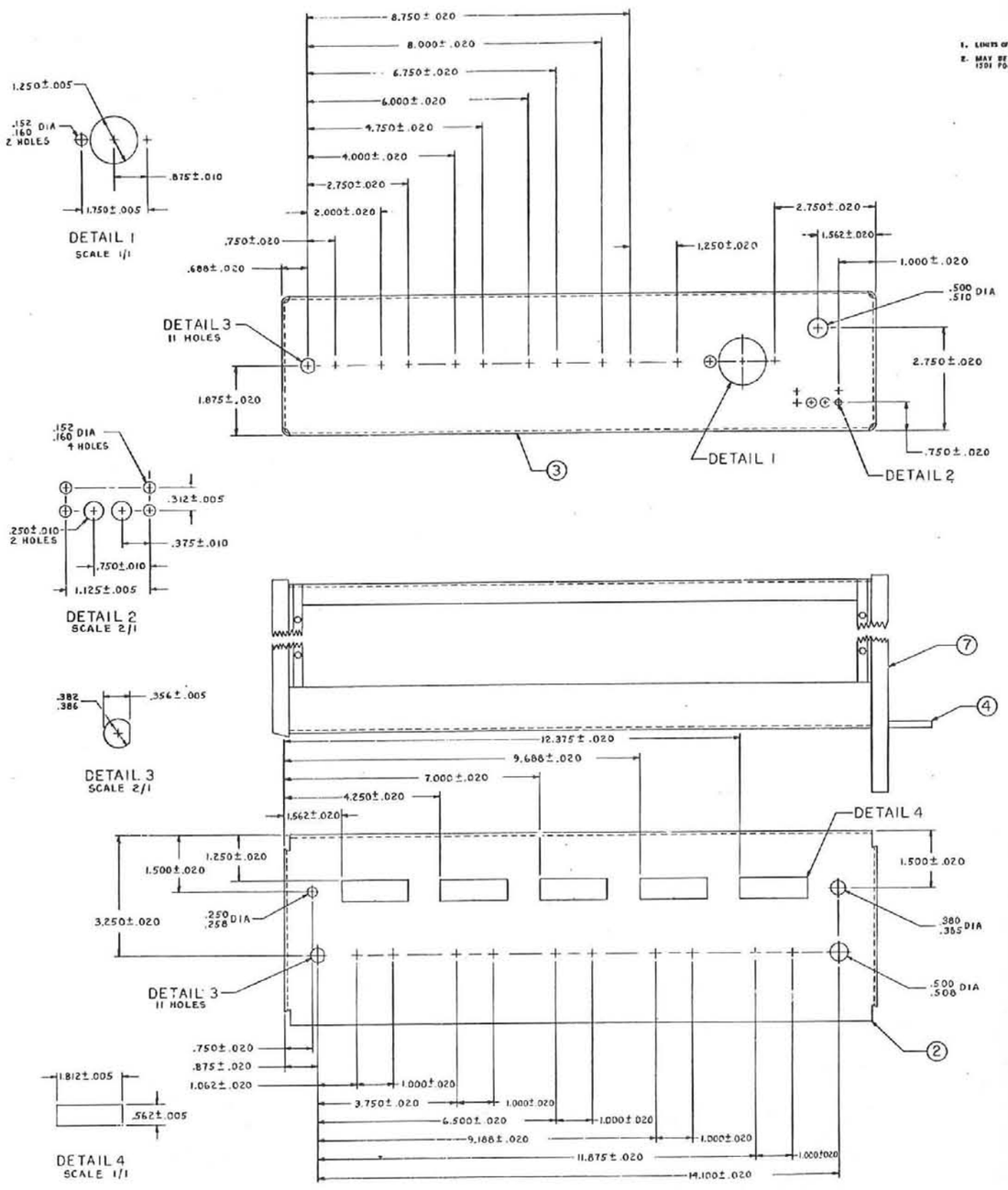

									12
									11
									10
		2		SIDE COVER REAR	NO. 5000-0724	2			9
		2		SIDE COVER FRONT	NO. 5000-0725	2			8
		2		FRAME	NO. 5060-0731	3			7
		1		TOP COVER	NO. 5000-0748	2			6
		1		BOTTOM COVER	NO. 5000-0760	2			5
		1		RACK MOUNT KIT	NO. 5048-0775	2			4
		1		REAR PANEL, FOLDED & PAINTED ONLY NO. 5000-0763		2			3
		1		FRONT PANEL, FOLDED & PAINTED ONLY NO. 5000-0759		2			2
									1
NO. REQD	NO. REQD	NO. REQD	NO. REQD	DESIGN NOTE OR MARK	DESCRIPTION	NOTE	SHEET ZONE		ITEM

LIST OF MATERIAL

SHEET / ISSUE	DR. JAN FISHER APPROVALS / DRG. DATE INITIALS
SHEET MARK	
CLASSIFICATION CATEGORY	MFG AGENCY APPROVALS
DMS CLASSIFICATION LEVEL: UNCLASSIFIED	PART CLASSIFICATION: UNCLASSIFIED

TITLE: SLIFER SYSTEM CHASSIS

MFG AGENCY NUMBER

SIZE: E | DWG NUMBER: NBH443

SCALE 1/1 SHEET 1 OF 1

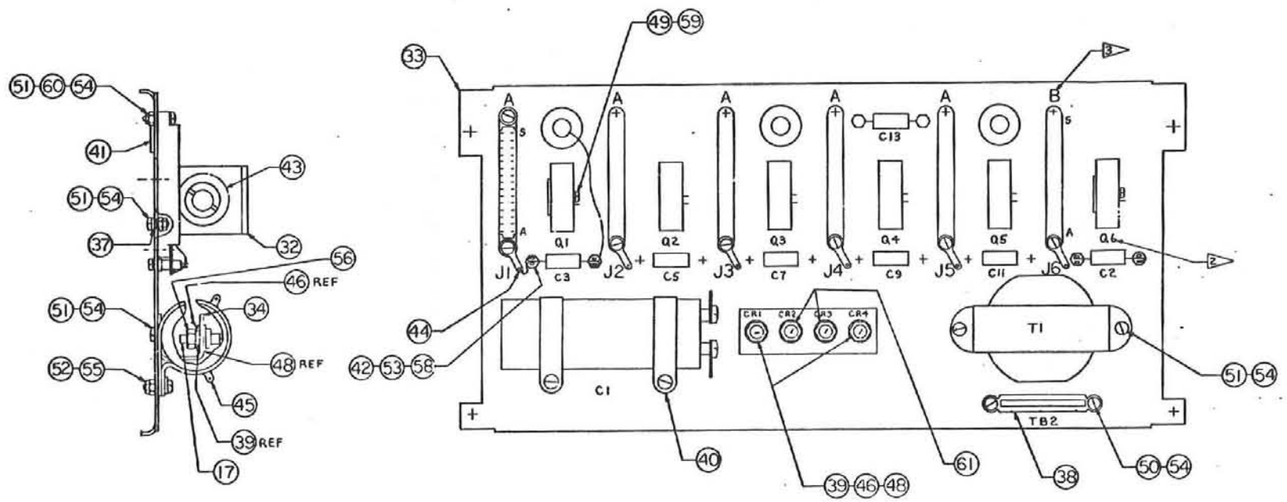

NOTES

1. DOCUMENTS REQUIRED FOR THE FABRICATION AND ACCEPTANCE OF THIS PART.
2. MARK PER 8019100, CLASS A2. .12 INCH CHARACTERS.
3. MARK PER 8019100, CLASS A2. .19 INCH CHARACTERS.
4. COMPONENTS NOT IDENTIFIED BY ITEM NUMBERS ON THE ASSEMBLY ARE LOCATED IN THE LIST OF MATERIALS BY REFERENCE DESIGNATIONS.
5. SILICON DC-4 GREASE IS NEEDED UNDER TRANSISTORS AND UNDER HEAT SINKS, ITEM 32 AT FABRICATION.
6. SOLDER AS PER 8013000.
7.
   - A. SANGAMO ELECTRIC CO. 1201 NO. 11ST. SPRINGFIELD ILL.
   - B. TANSITOR ELECTRONICS CO. WEST RD., BENNINGTON, VT.
   - C. AMPHENOL BORG ELECTRONICS CORP., 1830 SO. 54TH, CHICAGO 50, ILLINOIS.
   - D. RCA - SEMICONDUCTOR & MATERIAL DIV., SOMERVILLE, N.J.
   - E.
   - F. WINCHESTER ELECTRONICS INC., NORWALK, CONN.
   - H. THERMALOY CO. BOX 26136D DALLAS 26, TEXAS
   - J. BERNBACH RADIO CO. 145 HUDSON ST., NEW YORK 13, N.Y.
   - K. H. H. SMITH 2354 NOSTRAND AVE., BROOKLYN, N.Y.
   - L. UNIVERSAL METAL PROD.CO. CITY OF INDUSTRY, CALIF.
   - M. FORD RADIO & MICA CO. BROOKLYN 10, N.Y.
   - N THORDARSON-MEISSNER MFG.CO. MT. CARMEL ILL.
   - P CINCH-JONES MFG.CO. 1026 SO. HOMAN AVE. CHICAGO ILL.
   - Q. GOSHEN RUBBER CO. INC. 1940 S NINTH ST. GOSHEN IND.
   - R. ELASTIC STOP NUT CORP. OF AMERICA, UNION, NEW JERSEY
   - S DOW CHEMICAL CO. MIDLAND, MICH.

DESIGN AGENCY PART OR CONTROL NO.

REVISIONS

REVISION	SHEET ZONE	DESCRIPTION	DATE	CHECK	ENGR
1		HH DYKEMA 2213-5 2-23-65			
2		NOTE 7B WAS TRANSISTOR, T1 WAS 7F, 7N ADDED 3-29-65			
3		EXTENSIVE CHANGES HH DYKEMA 2213-5 6-8-65			
4		A AND S ADDED TO PRINTED CT. CONNECTORS TO INDICATE DIRECTION LETTERS TO RUN HHD 8-11-65			

	X		GREASE, SILICON NO. DC4	3/B		65
						64
						63
						62
	2	MS35335-32	WASHER, NO.10 LOCK, EXT. TEETH			61
	12	AN960-6L	WASHER NO.6 FLAT			60
	12	MS35333-36	WASHER, NO.4, INTERNAL TEETH, LOCK			59
	14	MS35337-21	WASHER NO.4 LOCK			58
						57
	4	MS35649-82	NUT 8-32UNC-2B HEX, PLAIN			
	2		NUT, 8-32NC-3B, ELASTIC STOP, NO.MJ-82	7R		55
	30		NUT, 6-32NC-3B, ELASTIC STOP, NO. MJ-62	7R		54
	14	MS35206-212	SCREW, 4-40UNC-2A PAN HD 3/16 LG			53
	12	MS35206-241	SCREW, 8-32UNC-2A PAN HD 1/2 LG.			52
	26	MS35206-231	SCREW, 6-32UNC-2A PAN HD. 5/8 LG.			51
	2	MS35206-228	SCREW, 6-32UNC-2A PAN HD. 3/8 LG.			50
	12	MS35206-214	SCREW, 4-40UNC-2A, PAN HD., 5/16LG.			49
	2		INSULATOR, MICA, NO. 7246660	7M		48
	AR	MIL-I-7444	SLEEVING, VINYL, ELECTRICAL	3		47
	4		TERMINAL, FLAT, SOLDER LUG NO. 1485-8	7K		46
	2		TERMINAL, FLAT, SOLDER LUG NO. 95-10	7J		45
	6		TERMINAL, FLAT, SOLDER LUG NO. 95-5	7J		44
	6		HEAT DISSIPATOR NO. 2212A	7H		43
	14		STAND OFF, TERM. NO. 756	7F		42
	3		GROMET, RUBBER, 3/8 I.D. 5/8 OD, NO. 611039	7Q		41
	2	MS21919	CLAMP, AIRCRAFT, NO. DG22	7K		40
	2		INSULATOR, FIBER, SHOULDER TYPE, NO.2156	7K		39
	1		TERMINAL BOARD, 6 TERM. NO. 2006	7P		38
	12		INSULATOR, FIBER, SHOULDER TYPE NO.2152	7K		37
						36
						35
	X	N88415	BRACKET			34
	X	N88411	SUBCHASSIS			33
	X	N32950	HEAT SINK	5		32
	1		CONNECTOR, 15 PIN, 143-015	7C		J4
	1			7C		J5
	1			7C		J4
	1			7C		J3
	1			7C		J2
	1		CONNECTOR, 15 PIN, 143-015	7C		J1
	1		TRANSFORMER FT-10	7M		T1
	1		TRANSISTOR, 2N1553A	7D		Q6
	1			7D		Q5
	1			7D		Q4
	1			7D		Q3
	1			7D		Q2
	1		TRANSISTOR, 2N1553B	7D		Q1
						18
	4		DIODE, 1N1200A	7D		17
						16
						15
	1		CAPACITOR, 100 UF 35V DC NO 6421	7B		C11
	1			7B		C9
	1			7B		C7
	1			7B		C5
	1			7B		C3
	1		100 UF 35V DC NO 6421	7B		C2
	1		CAPACITOR, TYPE DCM, 2000 UF, 539-1663-02	7A		C1
						7
						6
						5
	X	50167607	SLEEVING	3		4
	X	8013000	SOLDER	6		3
	X	8019100	LETTERING	2		2
	X	8900000	PROCESS STANDARD	1		1

NO. REQD	NO. REQD	NO. REQD	PERSON AGENCY NUMBER	DESCRIPTION	MATE	SHEET TYPE	ITEM

LIST OF MATERIAL

ISSUE A

SHEET INDEX

CLASSIFICATION CATEGORY

DWG CLASSIFICATION LEVEL: UNCLASSIFIED

MFG AGENCY APPROVALS

PART CLASSIFICATION: UNCLASSIFIED

TITLE: SLIFER, SUB-CHASSIS, ASSEMBLY OF,

MFG AGENCY NUMBER

SIZE E DWG NUMBER N88412

SCALE 1/1 SHEET 1 OF 1

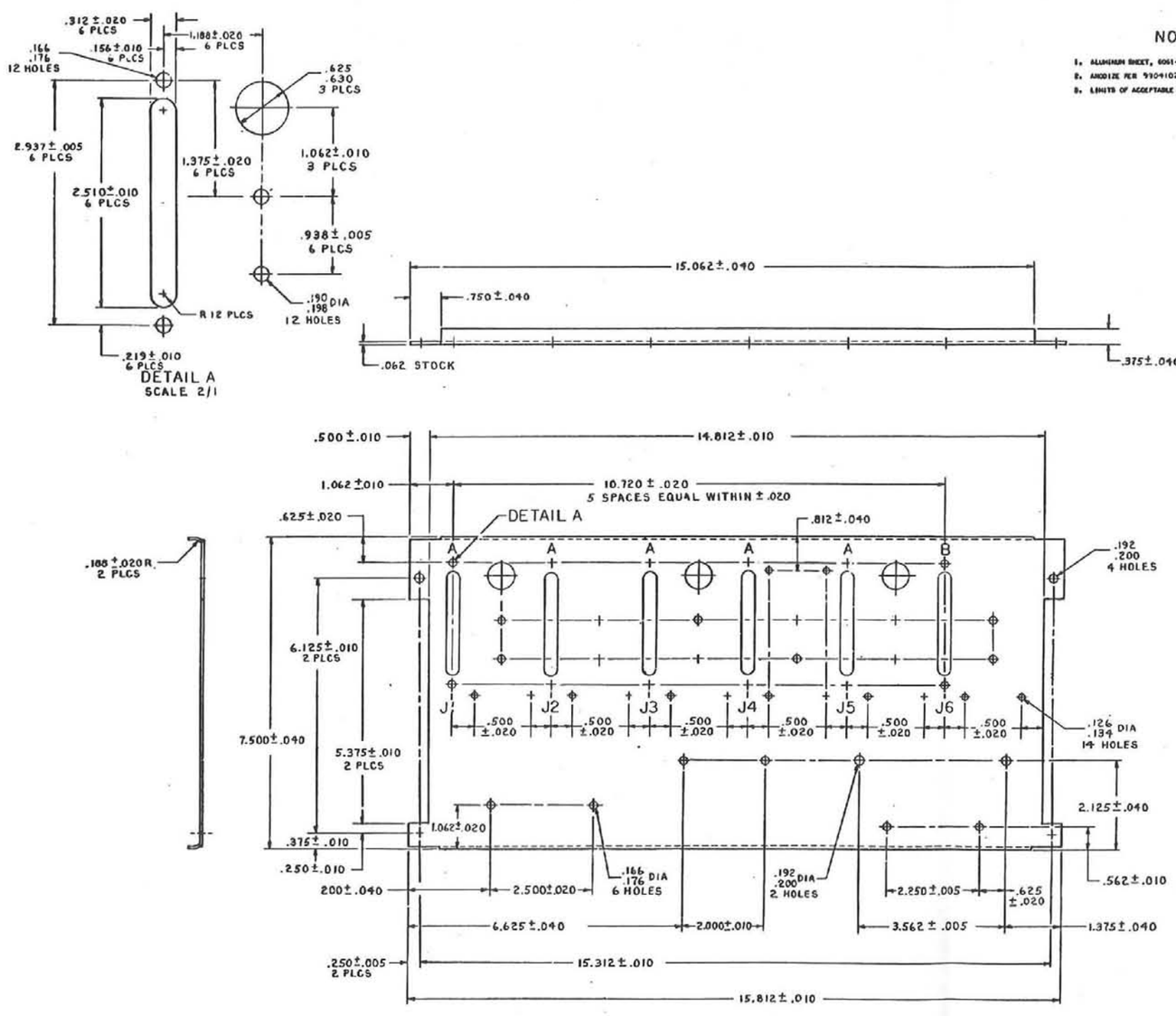

NOTES

1. ALUMINUM SHEET, 6061-T6 PER QQ-A-250/11
2. ANODIZE PER 9304102, TYPE I, CLEAR.
3. LIMITS OF ACCEPTABLE WORKMANSHIP ARE DEFINED IN 9000000.

DESIGN AGENCY PART OR CONTROL NO.	REVISIONS					
	ISSUE	SHEET ZONE	DESCRIPTION	DATE	CHKD	ENGR
	1		HH DYKEMA 2213-5 2-12-65			
	2		HOLE LOCATIONS CHANGED HHD 6-3-68			

SHEET 1 / ISSUE 2	DESIGN AGENCY APPROVALS: DWG DATE INITIALS	TITLE	SLIFER, SUB-CHASSIS
SHEET INDEX / CLASSIFICATION CATEGORY	MFG AGENCY APPROVALS	MFG AGENCY NAME	
DWG CLASSIFICATION LEVEL: UNCLASSIFIED	PART CLASSIFICATION: UNCLASSIFIED	SIZE / DWG NUMBER	E N88411

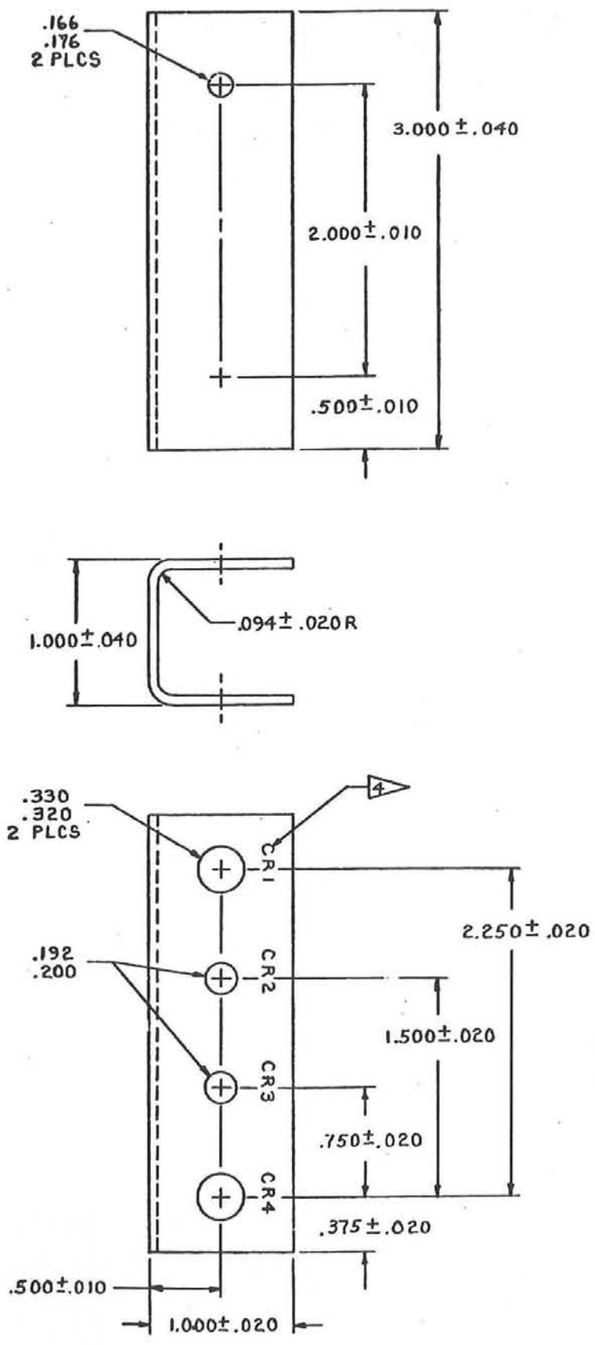

NOTES

1. ALUMINUM SHEET, 2024-T4 PER QQ-A-250/4. .062 THK.
2. ANODIZE PER 9904102, TYPE I, CLEAR.
3. LIMITS OF ACCEPTABLE WORKMANSHIP ARE DEFINED IN 9900000.
4. MARK PER 9919100, CLASS A2, .12 INCH CHARACTERS.

DESIGN AGENCY
PART OR CONTROL NO.

REVISIONS

ISSUE	SHEET ZONE	DESCRIPTION (PREPARED BY)	DATE	CHK'R	ENGR
1		HH DYKEMA 2213-S 2-11-65			
2		NOTE 2 WAS SG 162998 HHD 6-2-66			

SHEET 1 / ISSUE 2	DESIGN AGENCY APPROVALS: ORG / DATE / INITIALS	TITLE: BRACKET	
SHEET INDEX / CLASSIFICATION CATEGORY	MFG AGENCY APPROVALS	MFG AGENCY NUMBER	
DWG CLASSIFICATION LEVEL: UNCLASSIFIED	FA[illegible]ICATION: UNCLASSIFIED	SIZE D / DWG NUMBER N88413	SCALE 2/1 / SHEET 1 OF 1

DESIGN AGENCY PART OR CONTROL NO.	REVISIONS					
	ISSUE	SHEET ZONE	DESCRIPTION PREPARED BY	DATE	CHKR	ENGR
	1		HH DYKEMA 2213-5 2-10-65			

164995

NOTES

1. ALUMINUM SHEET, 2024-T4 PER QQ-A-250/4. .062 THK.
2. ANODIZE PER SG162998, CLEAR.
3. LIMITS OF ACCEPTABLE WORKMANSHIP ARE DEFINED IN 9900300.

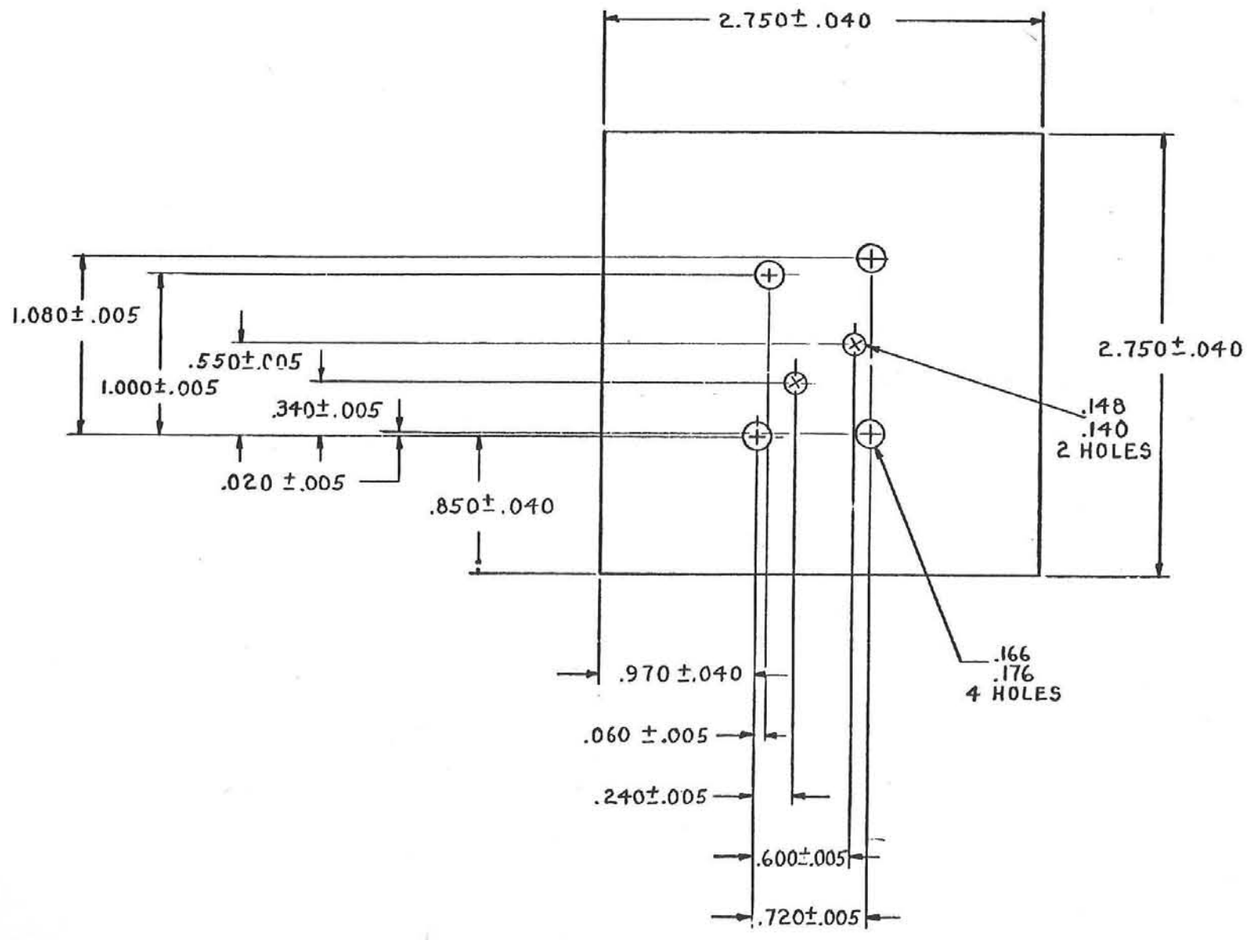

SHEET 1 / ISSUE 1	DESIGN AGENCY APPROVALS: ORG / DATE / INITIALS	TITLE	HEAT SINK
SHEET INDEX / CLASSIFICATION CATEGORY	MFG AGENCY APPROVALS	MFG AGENCY NUMBER	
DWG CLASSIFICATION LEVEL: UNCLASSIFIED	PART CLASSIFICATION: UNCLASSIFIED	SIZE D / DWG NUMBER N88414	SCALE 2/1 / SHEET 1 OF 1

164995

DESIGN AGENCY PART OR CONTROL NO.	REVISIONS					
	ISSUE	SHEET ZONE	DESCRIPTION PREPARED BY	DATE	CHKP	ENGR
	1		HH DYKEMA 2213-5 6-2-65	[illegible]		[illegible]
	2		.500±.020 ADDED, .750±.020 WAS 1.500±.020. HHD 8-18-65	[illegible]		[illegible]

NOTES

1. ALUMINUM ALLOY CHANNEL, 6063-T5, DIE NO. 2388, 2 X 1/2 X 1/8 INCHES. MAY BE OBTAINED FROM DUCOMMUN METAL AND SUPPLY CO., 1224 BELLAMAH AVE., N.W., ALBUQUERQUE, N. M.
2. ANODIZE PER 9904102, TYPE I, CLEAR.
3. LIMITS OF ACCEPTABLE WORKMANSHIP ARE DEFINED IN 9900000.

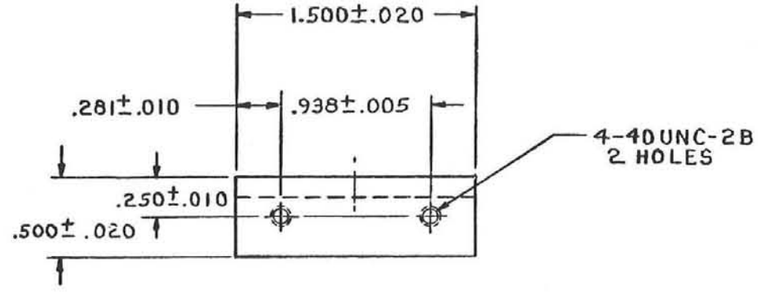

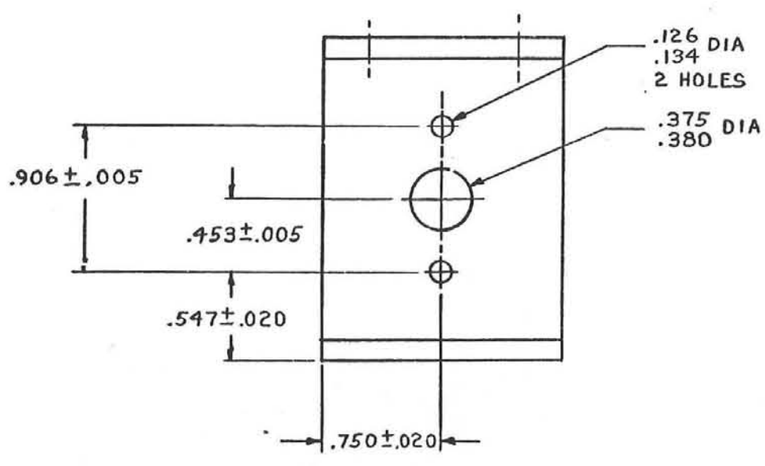

SHEET 1 ISSUE 2	DESIGN AGENCY APPROVALS ORG DATE INITIALS	TITLE	
SHEET INDEX		HEAT SINK	
CLASSIFICATION CATEGORY	MFG AGENCY APPROVALS		
		MFG AGENCY NUMBER	
DWG CLASSIFICATION LEVEL UNCLASSIFIED	PART CLASSIFICATION UNCLASSIFIED	SIZE D	DWG NUMBER N92950
		SCALE 2/1	SHEET 1 OF 1

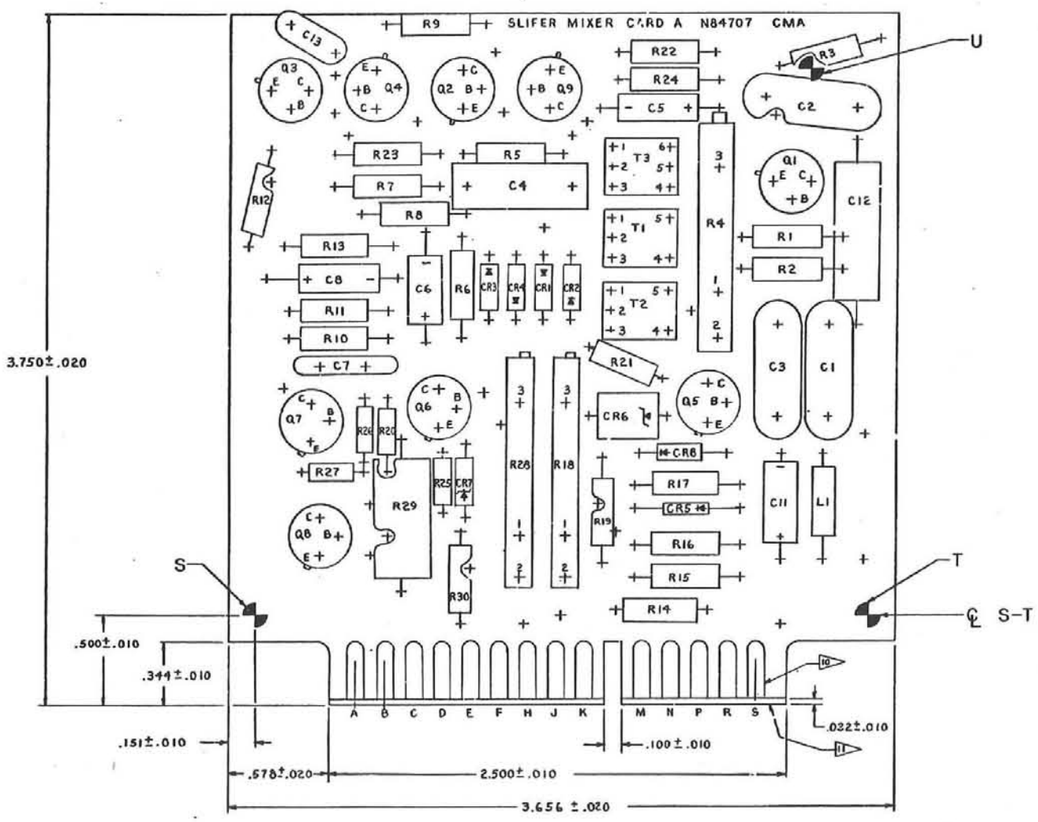

ALL CHANGES MADE ON THIS DWG AFFECTING THE ETCHED PATTERN MUST ALSO BE MADE ON CM- N84707

HOLE LOCATION & SIZE TABLE

HOLE NUMBER	X AXIS →	Y AXIS ↑	TOL	HOLE SIZE
DATUM T	3.344	—	.010	
" U	3.031	2.969	.010	

DESIGN AGENCY PART OR CONTROL NO.	REVISIONS					
	ZONE	SHEET ZONE	DESCRIPTION	DATE	CHKD	ENGR
	1		HH DYKEMA 2213-5 2-3-65			
	2		DATUMS DIMENSIONED & NOTES 10,11 ADDED, HHD 3-26-65			
	3		CIRCUIT REVISED 4-21-65			

NOTES

1. MATERIAL: LAMINATED PLASTIC SHEET, GLASS BASE EPOXY RESIN, COPPER CLAD, FR-4F OR EM-062-C-2/2, PER MIL-P-13949, .062 THICKNESS.
2. MADE PRINTED WIRING BOARD PER 9928001, TYPE 1, PLATING CLASS 2, .001 INCH MINIMUM THICKNESS.
3. HOLES TO BE LOCATED SO A MINIMUM OF .020 IS MAINTAINED BETWEEN EDGE OF HOLE AND EDGE OF CONDUCTOR.
4. SOLDER PRINTED CIRCUIT CONNECTIONS PER 50157663.
5. ALL HOLES TO BE PLATED THRU.
6. HOLE DIAMETERS APPLY AFTER PLATING.
7. INSULATING DISC SHOULD BE PLACED BETWEEN BOARD AND UNDERSIDE OF TRANSISTORS.
8. LANDS OF .100 DIA. SHOULD HAVE HOLES OF .042 ± .002 DIA.
9. MAY BE OBTAINED FROM:
   - A. J. V. MILLER, 5817 SO. MAIN ST., LOS ANGELES 3, CALIF.
   - B. ALLIED RADIO, 100 N. WESTERN AVE., CHICAGO, ILL.
   - C. HUGHES SEMICONDUCTOR DIV., NEWPORT BEACH, CALIF.
   - D. GENERAL ELECTRIC CO., APPARATUS SALES DIV. SCHENECTADY N.Y.
   - E. DURAMIC PRODUCTS INC., PALISADES N.J.
   - F. SPRAGUE ELECTRIC CO., NORTH ADAMS, MASS.
   - G. BOURNES INC., TRIMPOT DIV. 1200 COLUMBIA AV. RIVERSIDE, CALIF.
   - H. PACIFIC SEMICONDUCTORS, THOMPSON BLVD WOOLRIDGE.
   - J. TEXAS INSTRUMENTS, DALLAS 22, TEXAS.
   - K. MOTOROLA SEMICONDUCTOR PROD. PHOENIX, ARIZ.
   - L. BOURNS INC. RIVERSIDE CALIF.
10. MEDIUM PLATE CONNECTOR TABS (BOTH SIDES) PER 400058 (.0001 MINIMUM) WITH A NICKEL PLATE (.0005 MINIMUM) PER 2902105 AS A BASE. TABS SHOULD BE PLATED FOR THEIR FULL LENGTH.
11. CHAMFER 15° BOTH SIDES OF BOARD.

		AR		SOLDER	4		T1
							T0
		1		TRANSFORMER, SP-29 TRIAD	98		T3
		1		TRANSFORMER, SP-42 TRIAD	98		T2
		1		TRANSFORMER, SP-42 TRIAD	98		T1
							R6
		1	RC20GF150J	RESISTOR, 15 1/2W			R30
		1	RC42GF100J	10 2W			R29
		1		0-1K POT 224P-1-102	9L		R28
		1	RC07GF153J	15K 1/4W FIXED COMP.			R27
		1	RC07GF513J	51K			R26
		1	RC07GF751J	750			R25
		1	RC07GF103J	10K			R24
		1	RC07GF223J	22K			R23
		1	RC07GF272J	2.7K			R22
		1	RC07GF222J	2.2K			R21
		1	RC07GF912J	9.1K			R20
		1	RC07GF362J	3.6K 1/4W FIXED COMP			R19
		1		0-500 POT 224P-1-501	9L		R18
		1	RC07GF621J	620 1/4 W FIXED COMP			R17
		1		12.7 1/2W 1% 12R7F	9F		R16
		1		12.7 1/2W 1% 12R7F	9F		R15
		1		59.0 1/2W 1% 5900F	9F		R14
		1	RC07GF751J	750 1/4W FIXED COMP.			R13
		1	RC07GF751J	750			R12
		1	RC07GF103J	10K			R11
		1	RC07GF393J	39K			R10
		1	RC07GF292J	2.9K			R9
		1	RC07GF202J	2K			R8
		1	RC07GF751J	750			R7
		1	RC07GF103J	10K			R6
		1	RC07GF223J	22K 1/4W FIXED COMP			R5
		1		0-50 POTENTIOMETER 224P-1-5006	9L		R4
		1	RC07GF202J	2K 1/4W FIXED COMP			R3
		1	RC07GF123J	12K 1/4W FIXED COMP			R2
		1	RC07GF103J	RESISTOR, 10K 1/4W FIXED COMP			R1
		1		TRANSISTOR, 2N1131	9C		Q9
		1		2N1613			Q8
		1		2N1131			Q7
		1		2N1613			Q6
		1		2N1131			Q5
		1					Q4
		1					Q3
		1					Q2
		1		TRANSISTOR, 2N1131	9C		Q1
		1		INDUCTANCE, 240 UHY, 9210-94	9A		L1
							J5
		1		DIODE 1N649	9J		CR6
		1		DIODE 1N748A ZENER	9K		CR7
		1		DIODE 1N3020B, ZENER, 1W	9K		CR5
		1		DIODE 1N457	9H		CR4
		1		DIODE 1N914	9J		CR3
		1		DIODE 1N914	9J		CR2
		1		DIODE 1N914	9J		CR1
		1		DIODE 1N914	9J		T6
							C13
		1		CAPACITOR, 220 UUF DIPPED MICA			C12
		1		CAPACITOR, 0.1UF 29F-461	9D		C11
		1		3.35 UF 1500 3.35 9035 B2	9F		C10
							C9
		1		3.35 UF 1500 3.35 9035 B2	9F		C8
		1		1000 UUF DIPPED MICA	9E		C7
		1		3.35 UF 1500 3.35 9035 B2	9F		C6
		1		3.35 UF 1500 3.35 9035 B2	9F		C5
		1		0.1UF 29F-461	9D		C4
		1		0.01UF	9E		C3
		1		0.01UF	9E		C2
		1		CAPACITOR, 0.01UF	9E		C1
							2
		1	GMN84707	PRINTED CIRCUIT BOARD	1		1
NO REQD	NO REQD	NO REQD	NO REQD	ETCH AGENCY NUMBER	DESCRIPTION	NOTE	SHEET ZONE	ITEM

LIST OF MATERIAL

SHEET		SIGN AGENCY APPROVALS	TITLE
ISSUE 3		CHG DATE INITIALS	SLIFER MIXER, CARD A, ASSEMBLY OF
SHEET INDEX			
CLASSIFICATION CATEGORY		MFG AGENCY APPROVALS	
			NRD AGENCY NUMBER
DWG CLASSIFICATION LEVEL	FMET CLASSIFICATION		DWG NUMBER
UNCLASSIFIED	UNCLASSIFIED		E N84707
			SCALE 4/1 SHEET 1 OF 1

DESIGN AGENCY PART OR CONTROL NO.	REVISIONS ISSUE	SHEET ZONE	DESCRIPTION PREPARED BY	DATE	CHKR	ENGR
CKN84707-000	1		12-29-64 WHITFIELD, J.D. 4411-2	3-11-65 K		DHB
-	2		REVISED, H.H. DYKEMA 4-16-65	4-28-65 K		DHB

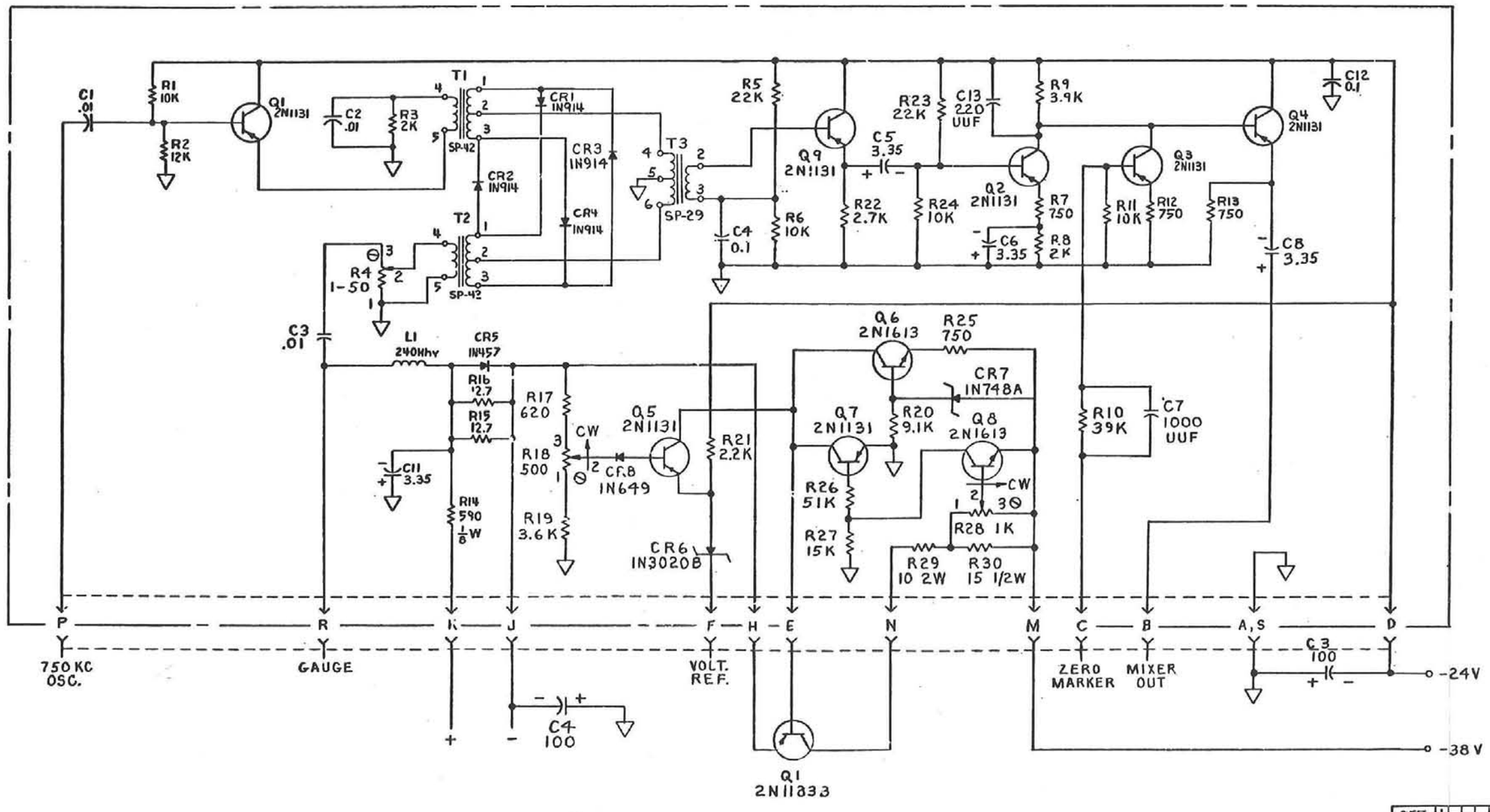

NOTES

1. UNLESS OTHERWISE SPECIFIED, RESISTANCE VALUES ARE IN OHMS,
2. ⏚ INDICATES CIRCUIT RETURN.
3. CAPACITOR VALUES ARE IN MICROFARADS UNLESS OTHERWISE SPECIFIED
4. ⊘ INDICATES SCREWDRIVER CONTROL.

SHEET 1 / ISSUE 2 — SHEET INDEX	DESIGN AGENCY APPROVALS: ORG / DATE / INITIALS	TITLE	SCHEMATIC, SLIFER MIXER, CARD A
CLASSIFICATION CATEGORY	MFG AGENCY APPROVALS	MFG AGENCY NUMBER	
DWG CLASSIFICATION LEVEL: UNCLASSIFIED	PART CLASSIFICATION	SIZE D / DWG NUMBER CKN84707	
		SCALE NONE	SHEET 1 OF 1

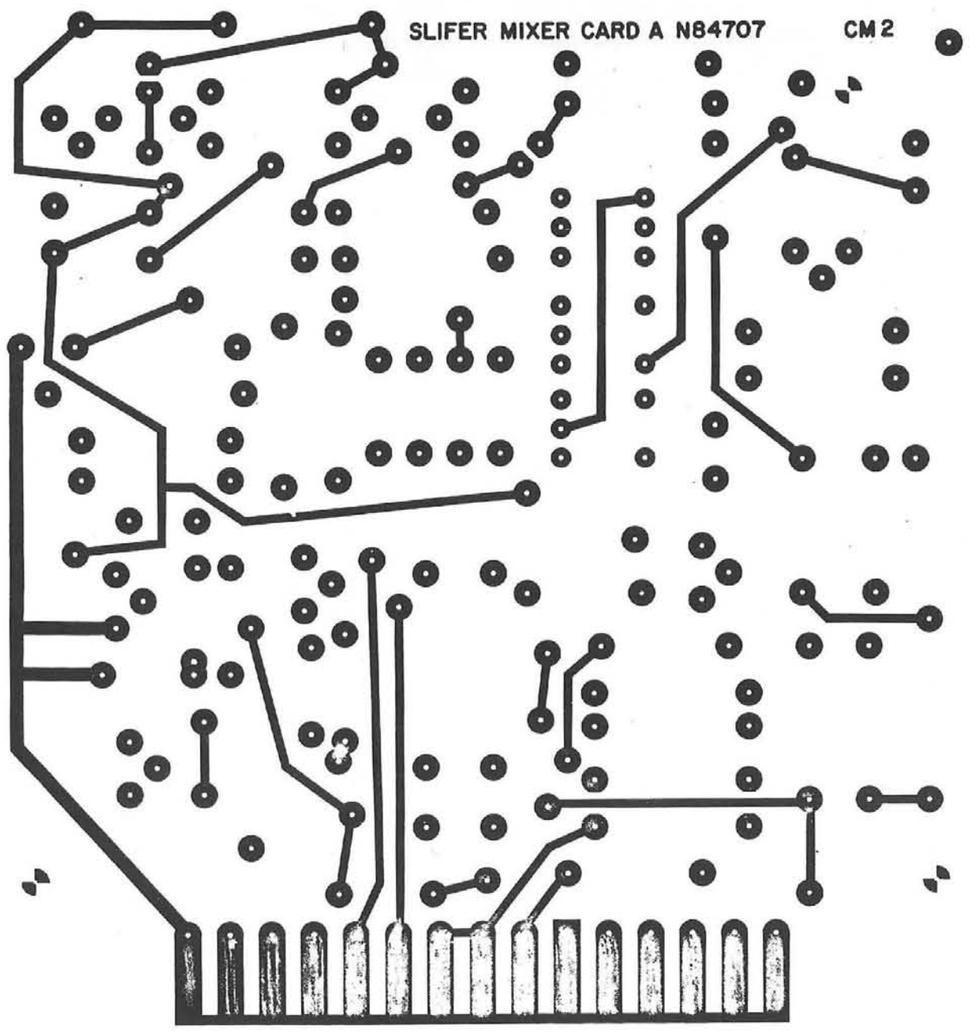

SIDE ONE

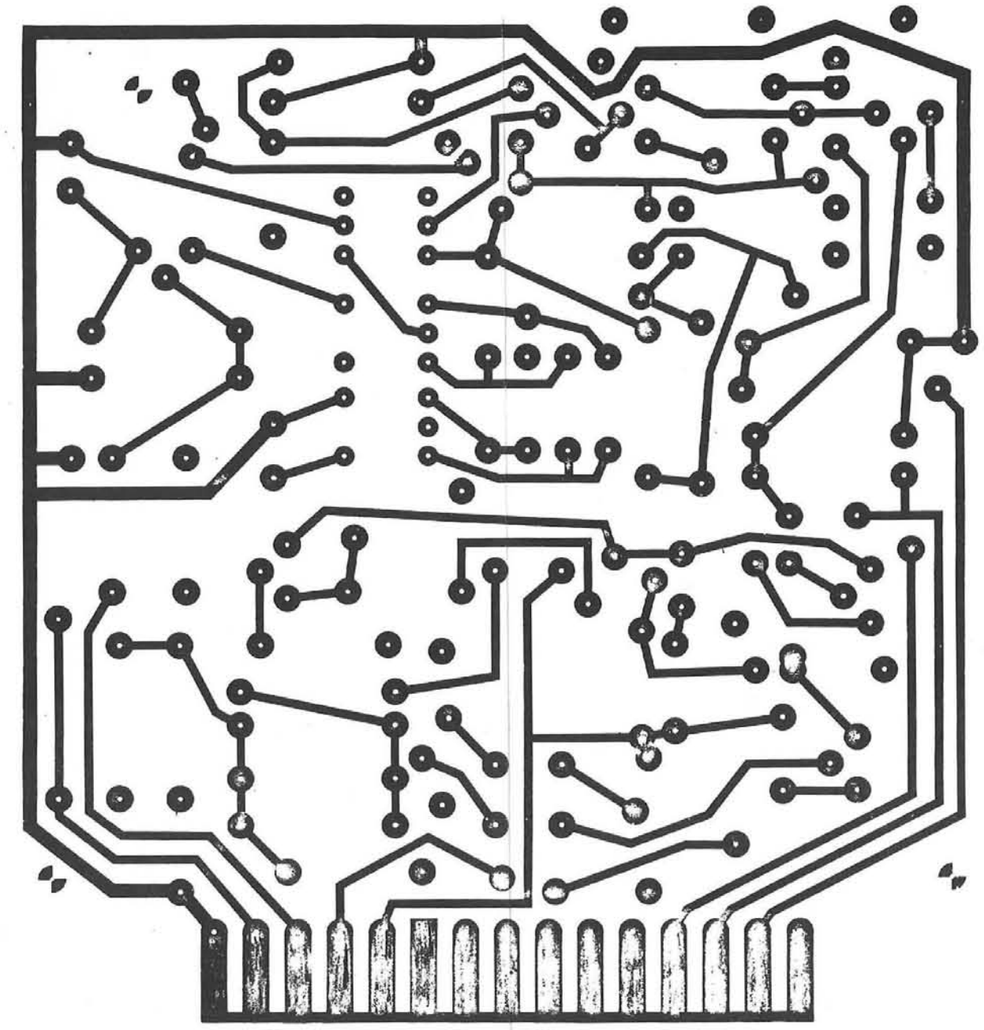

SIDE TWO

W064995

DESIGN AGENCY [redacted] CONTROL NO.	REVISIONS ISSUE	SHEET ZONE	DESCRIPTION PREPARED BY	DATE	CHKR	ENGR
CMN84707-001	2		5-7-65 REVISED & REDRAWN CM1 WAS CM0. NELSON, NJ 2211-5	5-7-65		[illegible]
CMN84707-002	3		REVISED CIRCUITRY; CM2 WAS CM1. JACKSON, J.C. 2211-5	8/25/65		[illegible]

SHEET INDEX			
SHEET	1	2	
ISSUE	3	3	

DESIGN AGENCY APPROVALS: ORG | DATE | INITIALS

MFG AGENCY APPROVALS

CLASSIFICATION CATEGORY

DWG CLASSIFICATION LEVEL: UNCLASSIFIED

PART CLASSIFICATION

TITLE: MASTER, PRINTED CIRCUIT

MFG AGENCY NUMBER

SIZE: D | DWG NUMBER: CMN84707

SCALE 4/1

DESIGN AGENCY PART OR CONTROL NO	REVISIONS					
	ISSUE	SHEET ZONE	DESCRIPTION — REVISED BY ___	DATE	CHKD	ENGR
	1		HH DYKEMA 2213-5 2-2-65			
	2		DATUM DIMENSIONS & NOTES 10,11 ADDED 3-29-65			
	3		REVISED HHD2213-5 5-28-65			

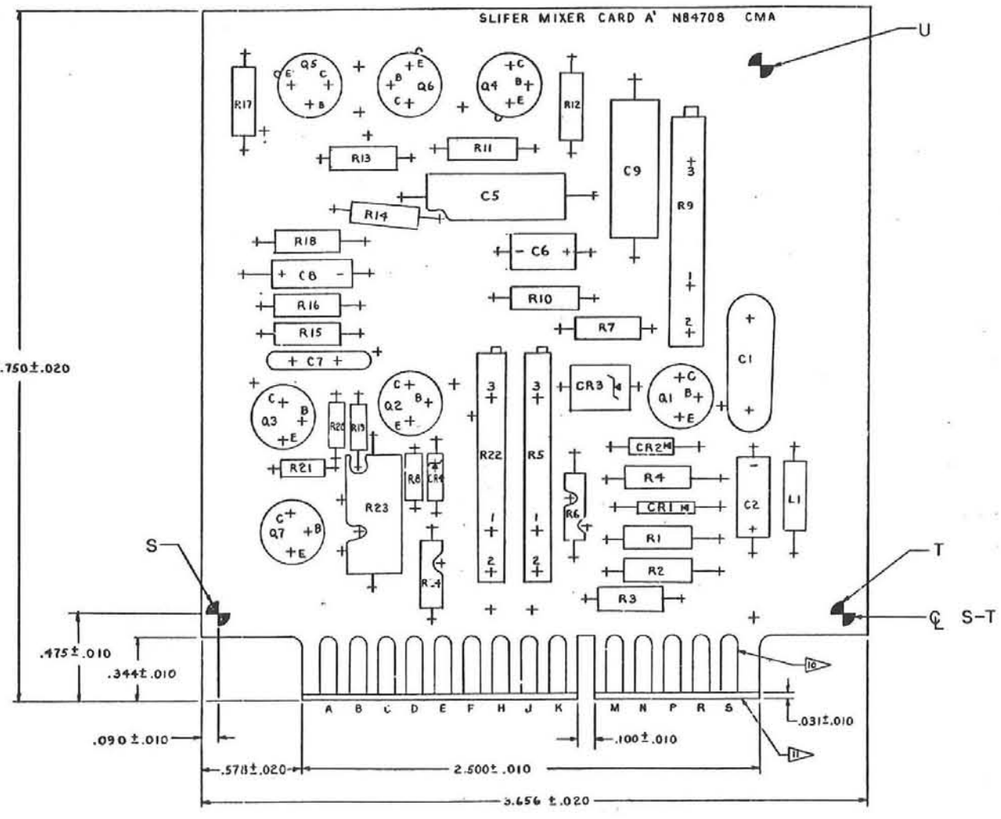

ALL CHANGES MADE ON THIS DWG AFFECTING THE ETCHED PATTERN MUST ALSO BE MADE ON CM-N84708

NOTES

1. MATERIAL: LAMINATED PLASTIC SHEET, GLASS BASE EPOXY RESIN, COPPER CLAD, FR-EF OR GH-062-C-1/2, PER MIL-P-13949, .062 THICKNESS.
2. MAKE PRINTED WIRING BOARD PER 9929001, TYPE I PLATING, CLASS 2, .001 INCH MINIMUM THICKNESS.
3. HOLES TO BE LOCATED SO A MINIMUM OF .010 IS MAINTAINED BETWEEN EDGE OF HOLE AND EDGE OF CONDUCTOR.
4. LANDS OF .100 DIA. SHOULD HAVE HOLES OF .042 ± .002 DIA.
5. ALL HOLES TO BE PLATED THRU.
6. HOLE DIAMETERS APPLY AFTER PLATING.
7. INSULATING DISC SHOULD BE PLACED BETWEEN BOARD AND UNDERSIDE OF TRANSISTORS.
8. MAY BE OBTAINED FROM:
   A. J. V. MILLER 5917 SO. MAIN ST. LOS ANGELES, CALIF.
   B. HUGHES SEMICONDUCTOR DIV., NEWPORT BEACH, CALIF.
   C. GENERAL ELECTRIC CO., APPARATUS SALES DIV., SCHENECTADY, N.Y.
   D. DURAMIC PRODUCTS INC. PALISADES,N.J.
   E. BOURNES INC. TRIMPOT DIV. 1200 COLUMBIA AVE., RIVERSIDE, CALIF.
   F. SPRAGUE ELECTRIC CO. NORTH ADAMS, MASS.
   G. PACIFIC SEMICONDUCTORS. THOMPSON BLVD VOLLEYDOE.
   H. MOTOROLA SEMICONDUCTOR PROD. PHOENIX ARIZ.
   J TEXAS INSTRUMENTS,CALLAS 22,TEXAS
10. RHODIUM PLATE CONNECTOR TABS (BOTH SIDES) PER 400058 (.0001 MINIMUM) WITH A NICKEL PLATE (.0005 MINIMUM) PER 9902100 AS A BASE. TABS SHOULD BE PLATED FOR THEIR FULL LENGTH.
11. CHAMFER 15° BOTH SIDES OF BOARD.
12. SOLDER PRINTED CIRCUIT CONNECTIONS PER SG167683.

HOLE LOCATION & SIZE TABLE

HOLE NUMBER	X-AXIS ↔	Y-AXIS ↕	TOL	HOLE SIZE
DATUM T	3.422	—	.010	
DATUM U	2.961	2.977	.010	

						53
AR		SOLDER, SG167683	12			52
						51
						50
1	RC42GF150J	RESISTOR, CC 1/2W				R24
1	RC42GF101J	100 2W				R23
1		0-1K POT 224P-1-102	8E			R22
1	RC07GF153J	15K 1/4 FIXED COMPOSITION				R21
1	RC07GF513J	51K				R20
1	RC07GF912J	9.1K				R19
1	RC07GF751J	750				R18
1	RC07GF751J	750				R17
1	RC07GF103J	10K				R16
1	RC07GF393J	39K				R15
1	RC07GF202J	2K				R14
1	RC07GF301J	300				R13
1	RC07GF392J	3.9K				R12
1	RC07GF223J	22K				R11
1	RC07GF103J	10K 1/4 W FIXED COMPOSITION				R10
1		0-50 POT 224P-1-500	8E			R9
1	RC07GF751J	750 1/4W FIXED COMPOSITION				R8
1	RC07GF222J	2.2K 1/4W FIXED COMPOSITION				R7
1	RC07GF362J	3.6K 1/4W FIXED COMPOSITION				R6
1		0-500 POT 224P-1-501	8E			R5
1	RC07GF621J	620 1/4 FIXED COMPOSITION				R4
1		510 1/8W 1%, 5900F	8F			R3
1		12.7 1/8W, 1%, 1287F	8F			R2
1		RESISTOR, 12.7 1/8W, 1%, 1287F	8F			R1
						24
1		COIL, 240 UHY NO. 9210-84	8A			L1
1		TRANSISTOR, 2N1613	8B			Q7
1		2N1131				Q6
1		2N1131				Q5
1		2N1131				Q4
1		2N1131				Q3
1		2N1613				Q2
1		TRANSISTOR, 2N1131	8B			Q1
1		DIODE, 1N748A, ZENER	8H			CR4
1		DIODE, 1N3020B, ZENER	8H			CR3
1		DIODE, 1N649	8J			CR2
1		DIODE, 1N657	8G			CR1
						12
1		CAPACITOR, 0.1UF 29F-461	8C			C9
1		3.35UF 150D 3.35 9035	8F			C8
1		1000UUF DIPPED MICA	8D			C7
1		3.35UF 150D 3.35 9035	8F			C6
1		0.1UF 29F-461	8C			C5
						6
						5
1		3.35UF 150D 3.35 9035	8F			C2
1		CAPACITOR, .01UF	8D			C1
						2
1	CMN84708	PRINTED CIRCUIT BOARD	1			1
NO. REQD	ATTR. REQD	ATTR. REQD	DESIGN AGENCY NUMBER	DESCRIPTION	NOTE	SUBSY CODE	ITEM

LIST OF MATERIAL

SHEET 1
ISSUE 3
SHEET INDEX
CLASSIFICATION CATEGORY
DESIGN AGENCY APPROVALS — ORG DATE INITIALS
MFG AGENCY APPROVALS
TITLE: SLIFER MIXER, CARD A', ASSEMBLY OF
MFG AGENCY NUMBER
DWG CLASSIFICATION LEVEL: UNCLASSIFIED
PART CLASSIFICATION: UNCLASSIFIED
SIZE E DWG NUMBER N84708
SCALE SHEET OF

DESIGN AGENCY PART OR CONTROL NO.	REVISIONS					
	ISSUE	SHEET ZONE	DESCRIPTION PREPARED BY	DATE	CHKR	ENGR
CKN84708-000	1		12-30-64 WHITFIELD, J.D. 4411-2	3-11-65		
	2		REVISED HH DYKEMA 5-20-65			

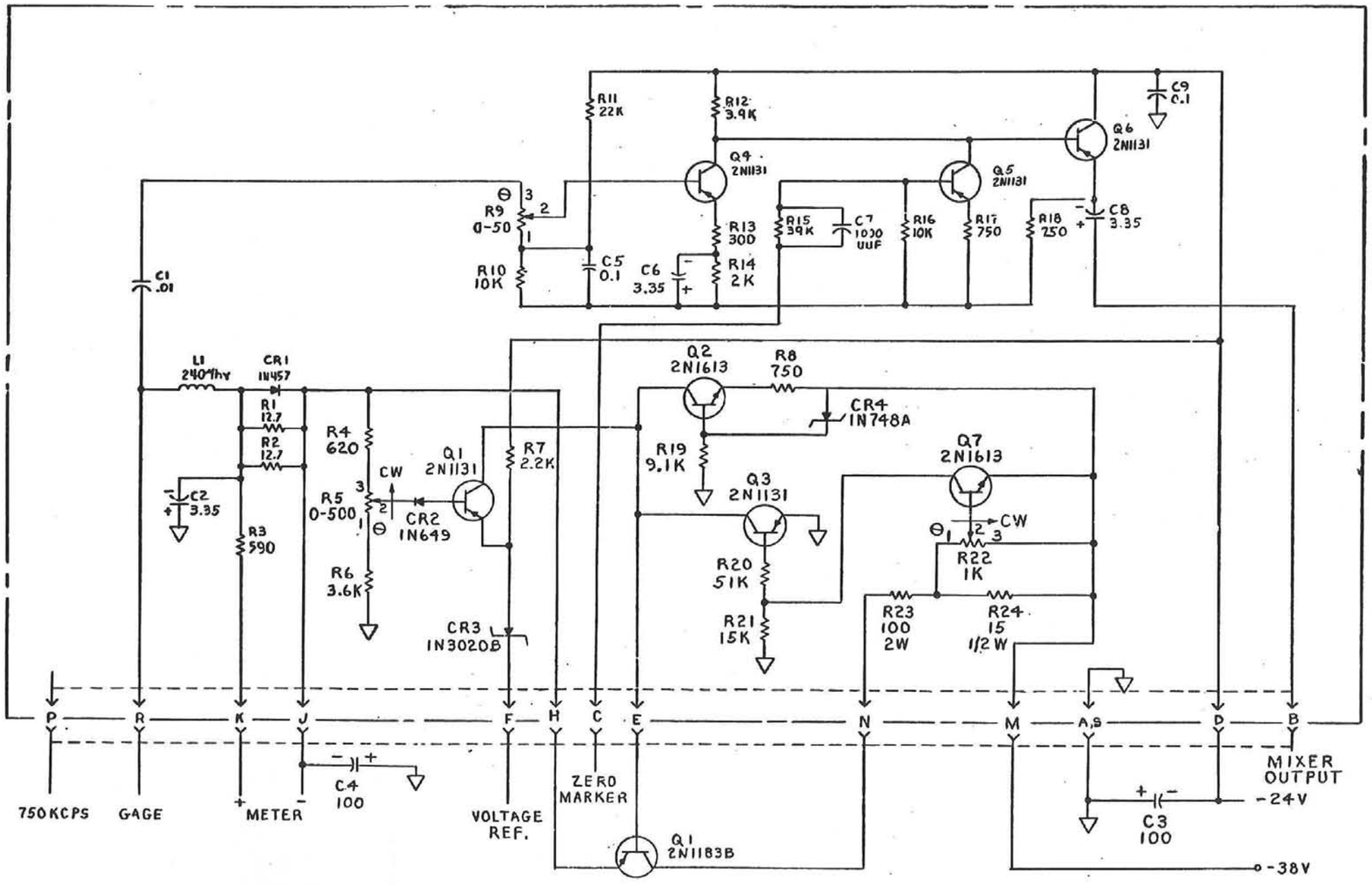

NOTES

1. UNLESS OTHERWISE SPECIFIED, RESISTANCE VALUES ARE IN OHMS.
2. ▽ INDICATES CIRCUIT RETURN.
3. ⊖ INDICATES SCREWDRIVER CONTROL.
4. CAPACITANCE VALUES ARE IN MICROFARADS UNLESS OTHERWISE SPECIFIED.

SHEET 1 / ISSUE 1	DESIGN AGENCY APPROVALS: ORG / DATE / INITIALS	TITLE	SCHEMATIC SLIFER MIXER CARD A
SHEET INDEX			
CLASSIFICATION CATEGORY	MFG AGENCY APPROVALS		
		MFG AGENCY NUMBER	
DWG CLASSIFICATION LEVEL: UNCLASSIFIED	PART CLASSIFICATION	SIZE D	DWG NUMBER CKN84708
		SCALE NONE	SHEET 1 OF 1

SLIFER MIXER CARD A' N84708 CMI

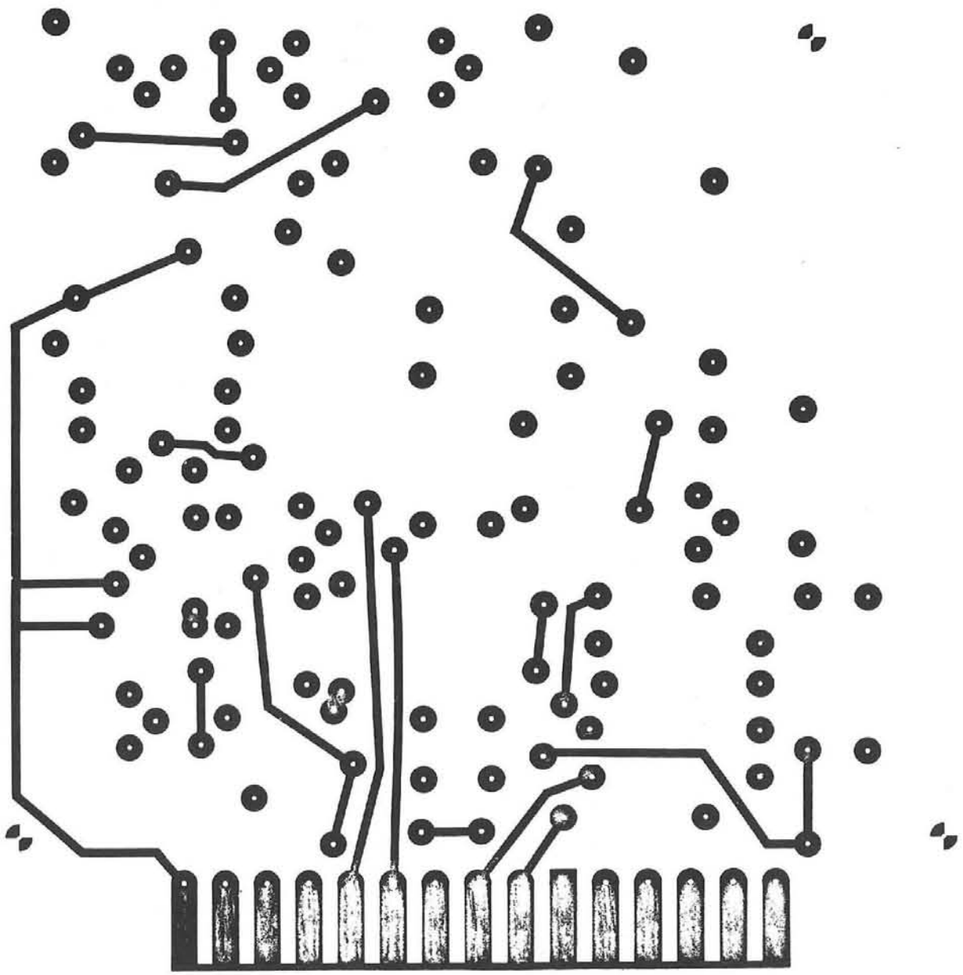

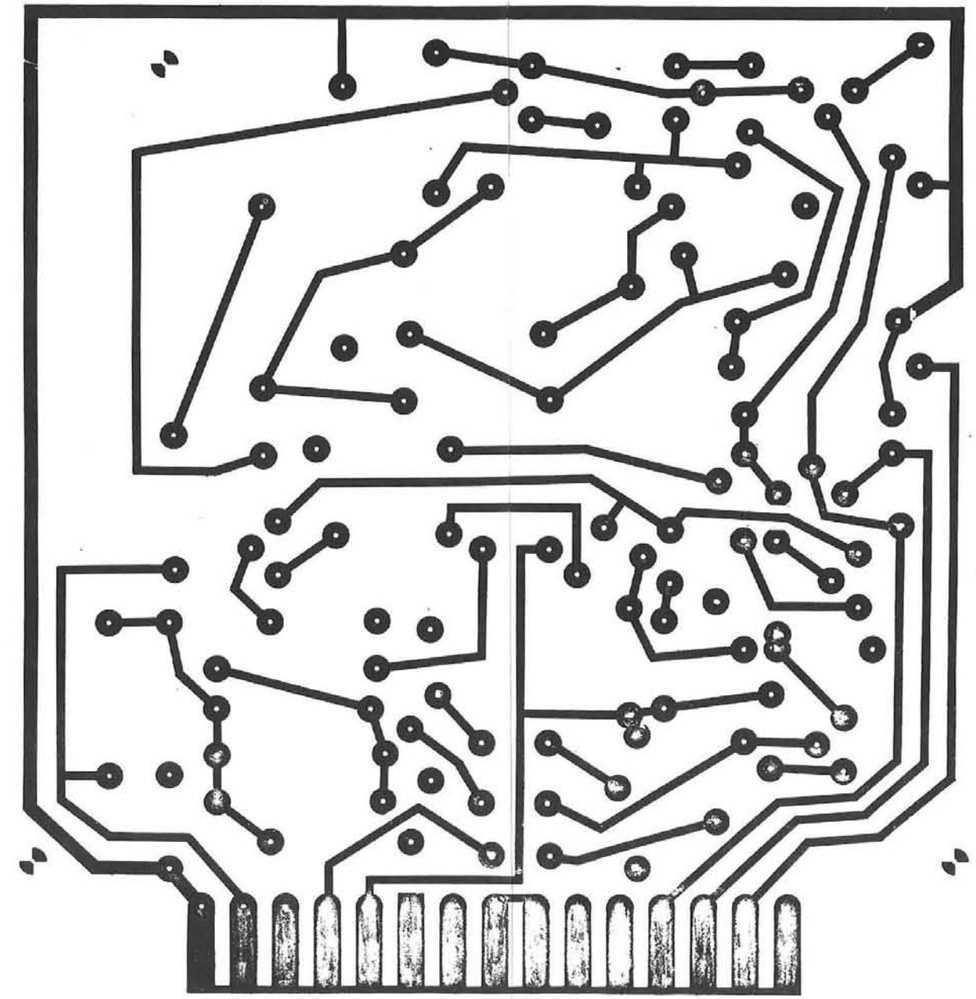

SHEET 1 2 / ISSUE 2 2	DESIGN AGENCY APPROVALS		TITLE
SHEET INDEX	ORG	DATE	INITIALS	MASTER, PRINTED CIRCUIT
CLASSIFICATION CATEGORY				
	MFG AGENCY APPROVALS			MFG AGENCY NUMBER
DWG CLASSIFICATION LEVEL: UNCLASSIFIED	PART CLASSIFICATION: UNCLASSIFIED			SIZE D / DWG NUMBER CMN84708
				SCALE 4/1 / SHEET 1 OF 2

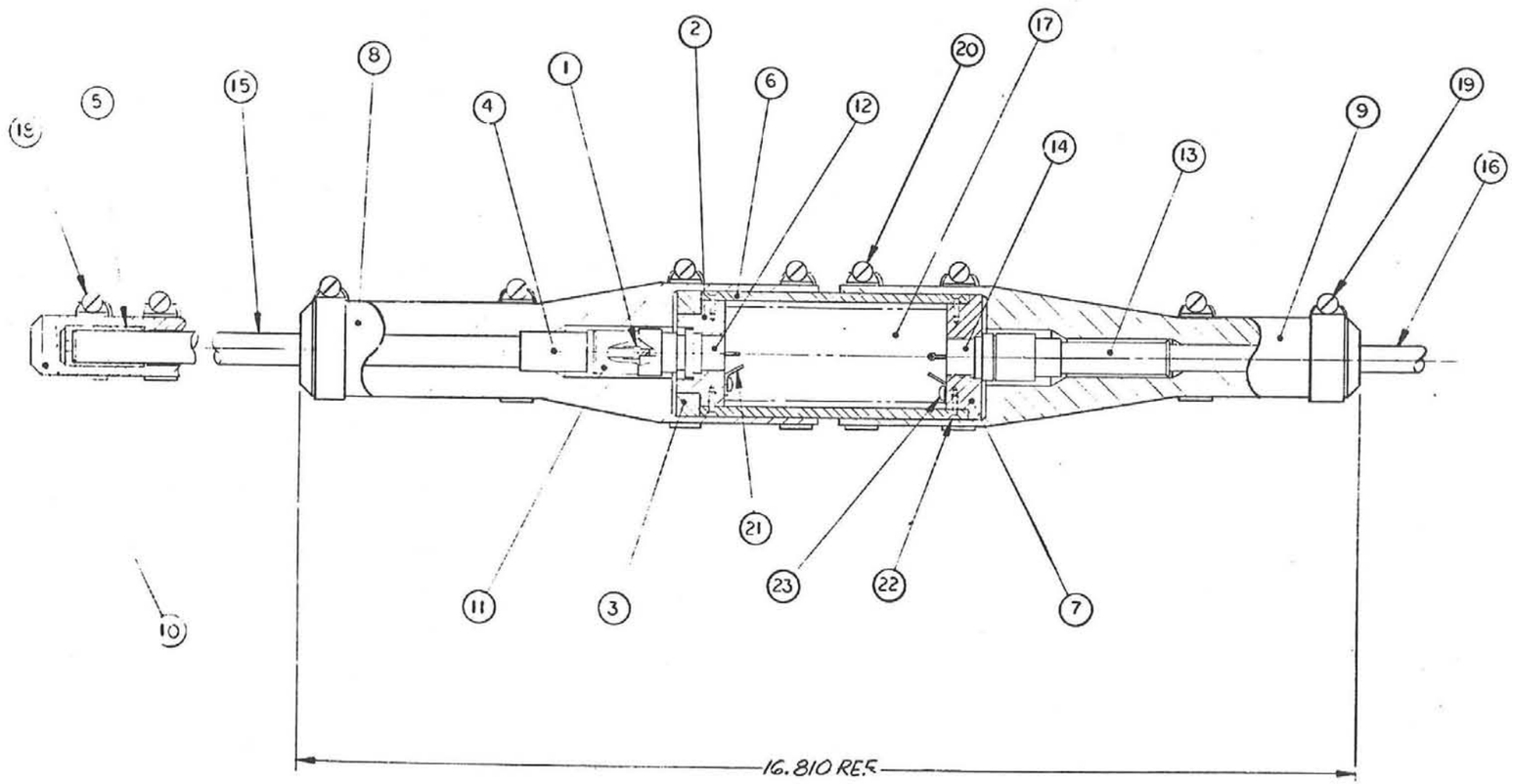

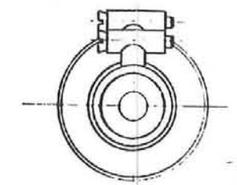

PART NO.	ISSUE	SHEET	REVISIONS DESCRIPTION	PREPARED BY	DATE	
P90344-000	A			J. MEDINA 7653 D. ISTT 9129	7/1/70	

NOTES

1. SOLDER PER 9913000-02, METHOD OPTIONAL.

NO. REQD	DESIGN AGENCY NUMBER	DESCRIPTION	NOTE	SHEET ZONE	ITEM
					25
					24
2	MS35206-212	SCREW, PAN HD, 4-40 UNC-2A x 3/16 LG.			23
8	MS35190-222	SCREW, FLAT HD, 4-40 UNC-2A x 5/16 LG			22
2	MS35430-3	TERMINAL LUG			21
4	C36HS	HOSE CLAMP (WITTEK)			20
4	C20HS	HOSE CLAMP (WITTEK)			19
2		HOSE CLAMP (WITTEK)			18
1		SLIFER OSCILLATOR (SANDIA FURNISHED)			17
1	RG-213/U	CABLE, COAX			16
1	HJ4-50	HELIAX CABLE			15
1	82-836	CONNECTOR AMPHENOL			14
1	UG-1213/U	CONNECTOR			13
1	UG-680/U	CONNECTOR			12
1	UG-21E/U	CONNECTOR			11
1	P70368-000	SLIFER END SEAL			10
1	P70367-000	CABLE SEAL, TYPE 'HN' CONNECTOR REF., .50 DIA			9
1	P70366-000	CABLE SEAL, TYPE 'N' CONNECTOR			8
1	P87992-000	END CAP, TYPE HN			7
1	P90343-000	OSCILLATOR CAN			6
1	P90342-000	ANDREW HJ4-50 SHORTING CAP			5
1	P90341-000	ADAPTOR, OUTER CONDUCTOR TYPE HJ4-50			4
1	P90340-000	RING			3
1	P90339-000	END CAP, TYPE N			2
1	P90338-000	ADAPTOR, CENTER CONDUCTOR, TYPE HJ4-50			1
NA	9913000-02	SOLDERING ELECTRICAL CONNECTIONS			
NA	9900000-03	GENERAL REQUIREMENTS			

LIST OF MATERIAL

AGENCY APPROVALS			SHEET	1
ORG	DATE	APPROVALS	ISSUE	A

SHEET INDEX

PART CLASSIFICATION: UNCLASSIFIED

DWG CLASSIFICATION LEVEL: UNCLASSIFIED

TITLE: SLIFER OSCILLATOR CAN PROJECT FAULTLESS

SIZE	CODE IDENT. NO.	DWG NUMBER
C	14213	P90344

SCALE 1/1 SHEET 1 OF 1

D102187

DESIGN AGENCY PART [redacted] NO.	REVISIONS ISSUE	DESCRIPTION	PREPARED BY	DATE	CHKR	ENGR
P70365000	A	BASICALLY IDENTICAL TO E. G. AND G. DWG. NO. 51034	F. MARTINEZ (CC) 7652-2 D. LIST 9123			

NOTES:

1. GENERAL REQUIREMENTS ARE DEFINED IN 9900000-03.
2. MATERIAL: NEOPRENE RUBBER PER 4150190-01..

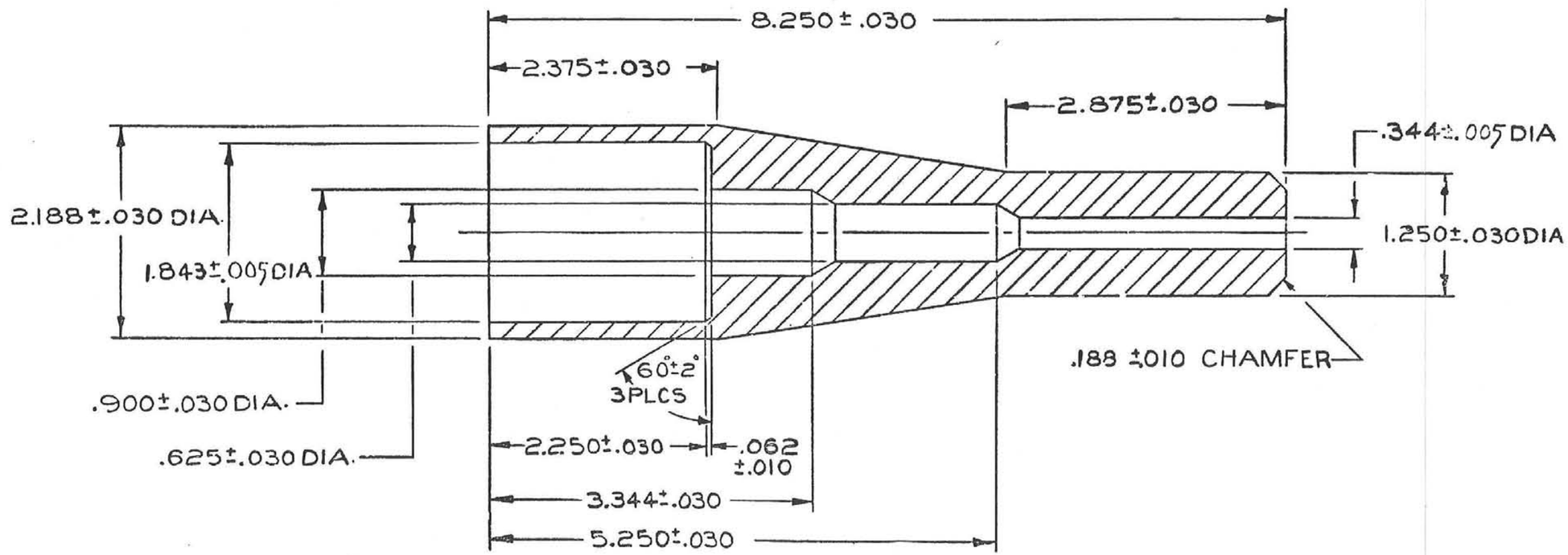

AGENCY APPROVALS			SHEET 0	TITLE
ORG	DATE	INITIALS	ISSUE	CABLE SEAL TYPE "HN" CONNECTOR
9123	2-17-69	DBL	UNCLASSIFIED	
			ORG. CLASSIFICATION LEVEL	SIZE B / CODE IDENT. NO. [illegible] / DWG. NUMBER P70365
7652-2	2-18-69	RBH	UNCLASSIFIED	SCALE 1/1 / SHEET 1 OF 1

D102187

DESIGN AGENCY PART [redacted] NO.	REVISIONS ISSUE	DESCRIPTION	PREPARED BY	DATE	CHKR	E
P70366-000	A	BASICALLY IDENTCAL TO E.G.AND G. DWG NO. 51035 F. MARTINEZ CD 7652-2 D.LIST 9123				

NOTES:

1. GENERAL REQUIREMENTS ARE DEFINED IN 9900000-03.
2. MATERIAL: NEOPRENE RUBBER PER 4150190-01.

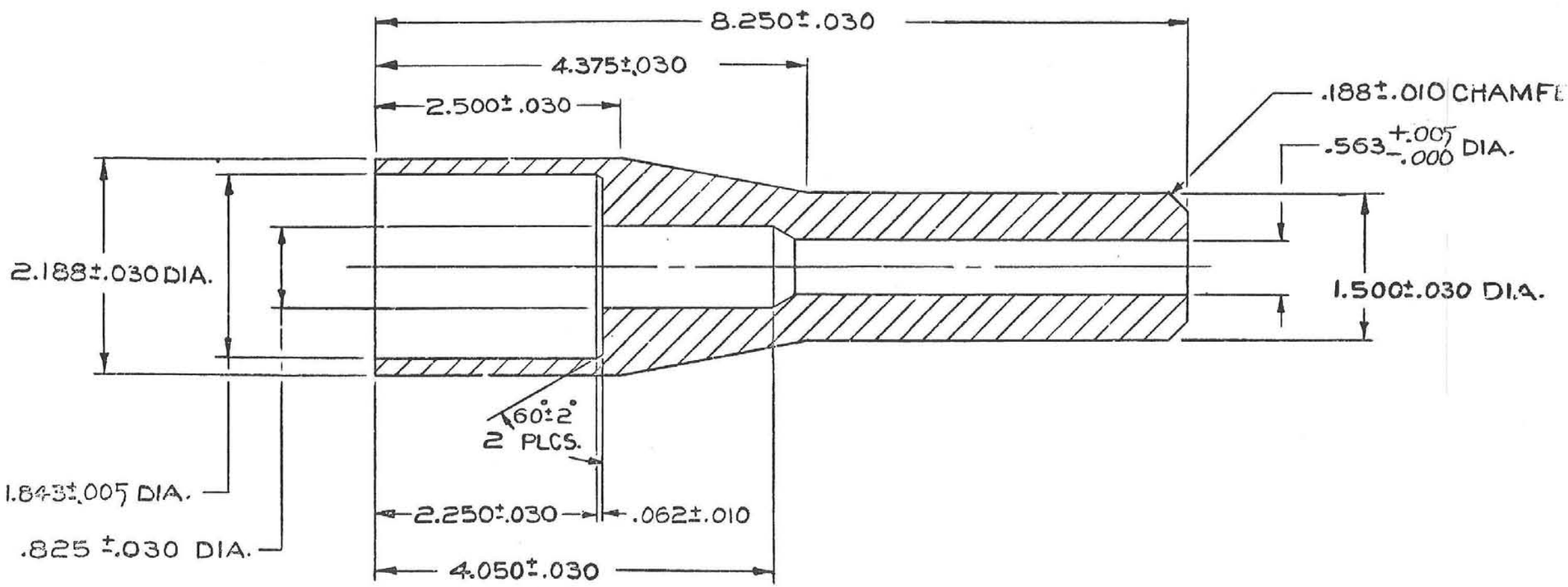

AGENCY APPROVALS ORG	DATE	INITIALS	SHEET 1 ISSUE A	TITLE
9123	2-17-69	DBL	PRINT CLASSIFICATION UNCLASSIFIED	CABLE SEAL, TYPE "N" CONNECTOR
7652-2	2-18-69	RJH	DWG. CLASSIFICATION LEVEL UNCLASSIFIED	SIZE B CODE IDENT. NO. 14213 DWG. NUMBER P70366 SCALE 1/1 SHEET 1 OF 1

D102187

DESIGN AGENCY PART [redacted] NO.	REVISIONS ISSUE	DESCRIPTION	PREPARED BY	DATE	CHKR	ENGR
P70367-000	A	F. MARTINEZ (CD) 7652-2 D. LIST 9123				
	B	1.843±.005 DIM WAS 1.643 ±.005 G JEYS 7652-2 D LIST 9123 3-19-69	3/20/69		DRX	
	C	.685 DIM WAS .625 D LIST 9123 G JEYS 7652-2 3-24-69	3/29/69		DRX	

NOTES:

1. GENERAL REQUIREMENTS ARE DEFINED IN 9900000-03.
2. MATERIAL: NEOPRENE RUBBER PER 4150190-01.

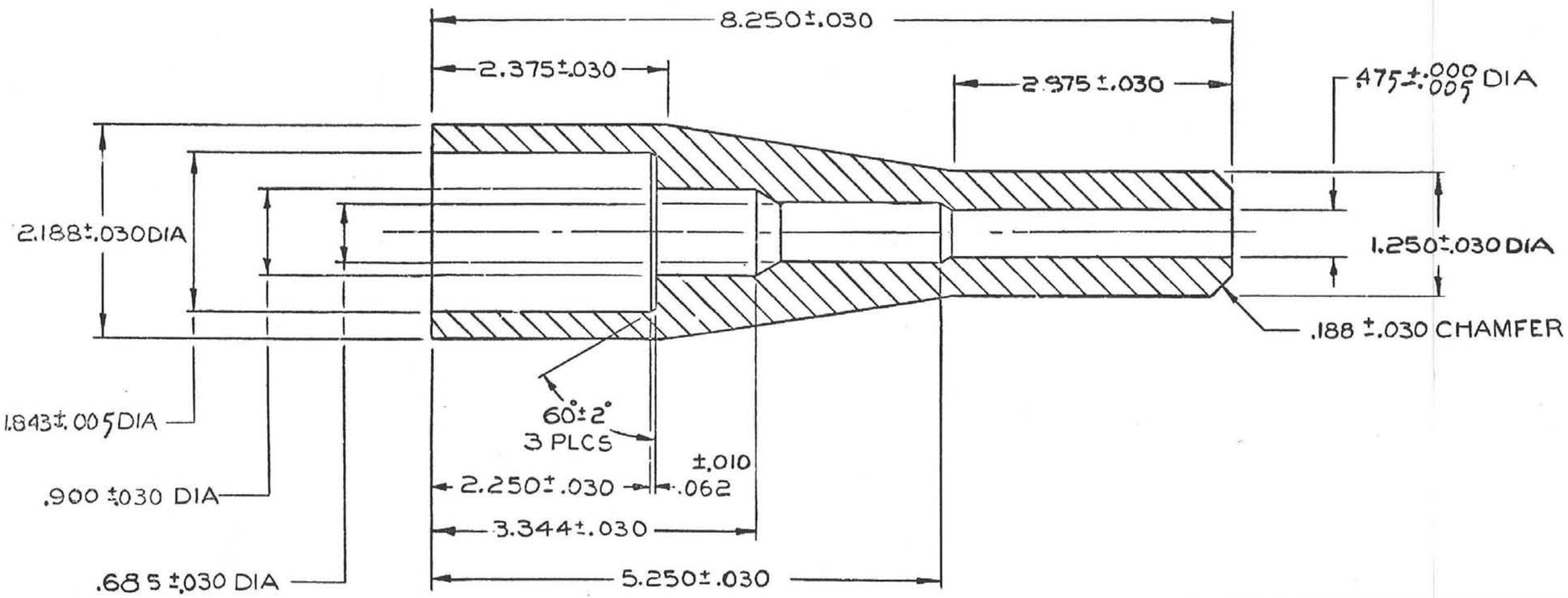

AGENCY APPROVALS			SHEET 1	TITLE
ORG	DATE	INITIALS	ISSUE C	CABLE SEAL TYPE "HN" CONNECTOR RF1.50DIA
9123	2-17-69	DRL	PART CLASSIFICATION UNCLASSIFIED	
			DWG. CLASSIFICATION LEVEL	SIZE B / CODE IDENT. NO. 14213 / DWG. NUMBER P70367
7652-2	2-18-69	RFH	UNCLASSIFIED	SCALE 1/1 / SHEET 1 OF 1

D 102187

DESIGN AGENCY PART [redacted] NO.	REVISIONS				
	ISSUE	DESCRIPTION	PREPARED BY	DATE	CHKR	ENGR
P70368-000	A	F. MARTINEZ (CD) 7652-2 D. LIST 9123		2-20-69		
	B	TITLE SLIFER WAS SLYFYER. G JEYS 7652-2 D LIST 9123 3-24-69		3/25/69		DBL

NOTES

1. GENERAL REQUIREMENTS ARE DEFINED IN 9900000-03.
2. MATERIAL: NEOPRENE RUBBER PER 4150190-01.

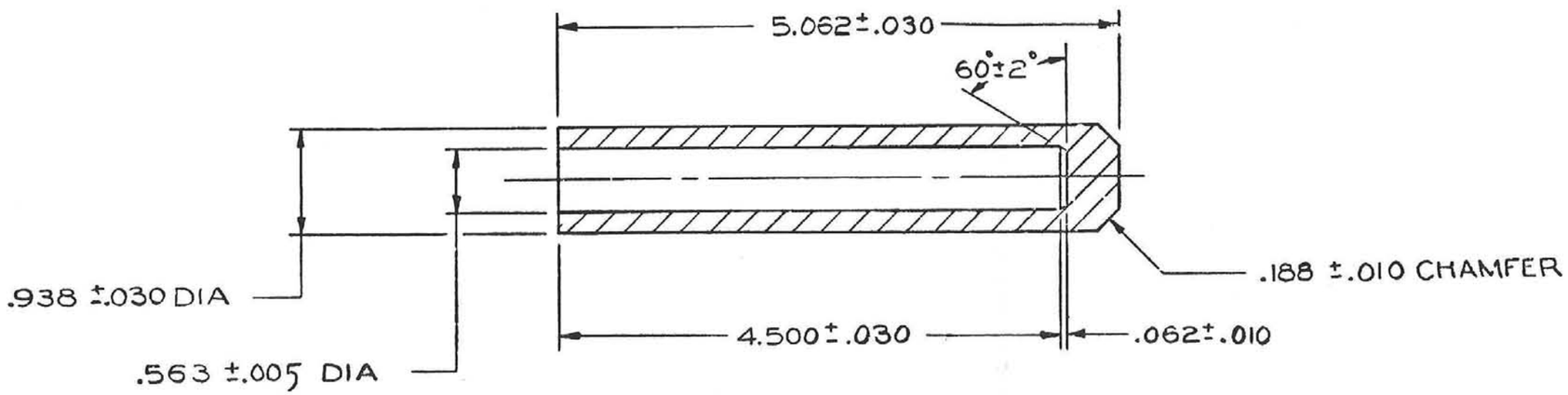

AGENCY APPROVALS			SHEET 1	TITLE		
ORG	DATE	INITIALS	ISSUE B	SLIFER END SEAL		
9123	2/18/69	DBL	PART CLASSIFICATION UNCLASSIFIED			
			DWG. CLASSIFICATION LEVEL UNCLASSIFIED	SIZE B	CODE IDENT. NO. 14213	DWG. NUMBER P70368
7652-2	2-17-69	RBM		SCALE 1/1		SHEET 1 OF 1

DESIGN AGENCY PART [redacted] NO.	REVISIONS					
	ISSUE	DESCRIPTION	PREPARED BY	DATE	CHKR	ENGR
P87992-000	A	I. MEDINA (D) 7652-2	D. LIST 9123	7/2/70		

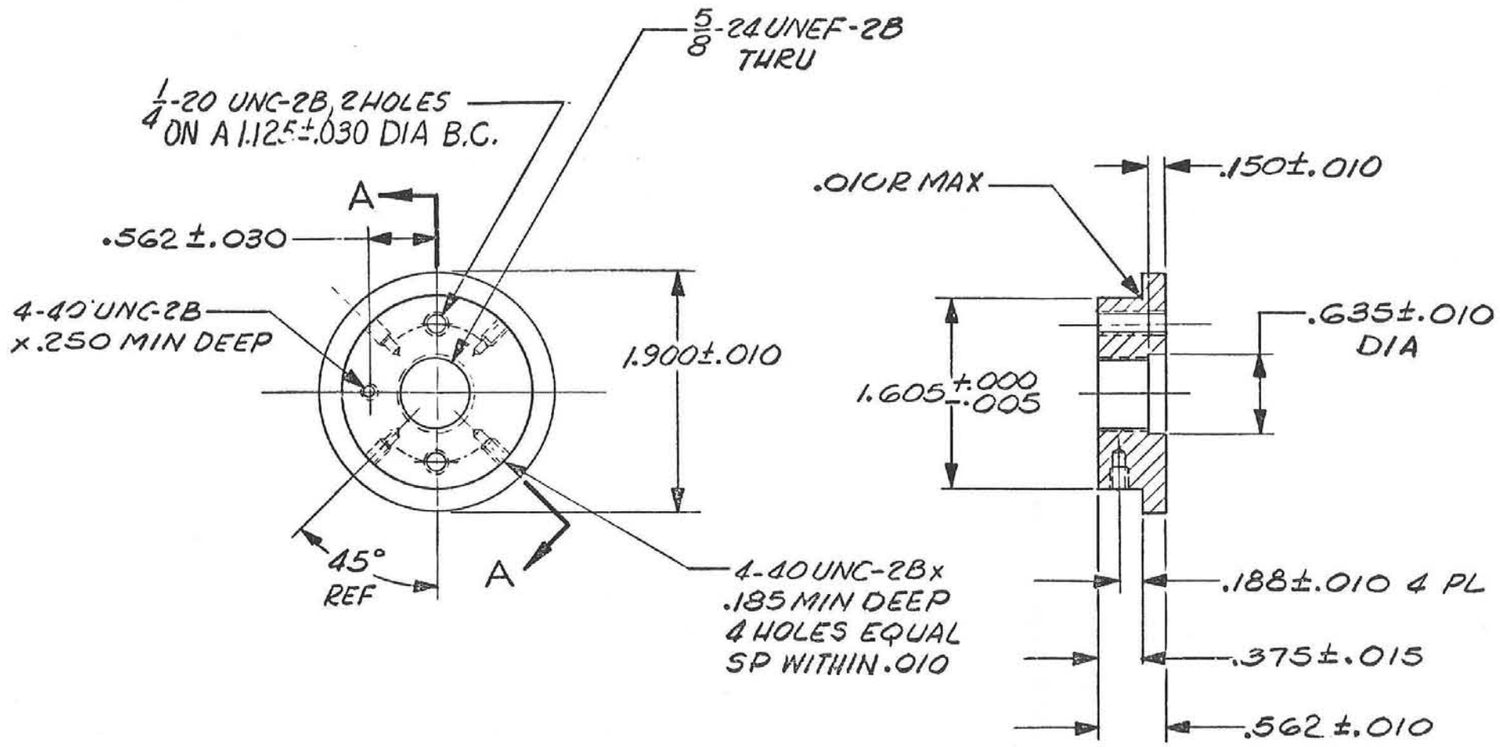

SECTION A-A

NOTES

1. MATERIAL: ALUMINUM 6061-T6 2.000 ± .020 DIA STOCK.
2. ANODIZE, CLEAR.

AGENCY APPROVALS			SHEET 1	TITLE END CAP TYPE HN		
ORG	DATE	INITIALS	ISSUE A			
			SET INDEX			
			PART CLASSIFICATION UNCLASSIFIED	SIZE C	CODE IDENT NO. 14213	DWG NUMBER P87992
			DWG CLASSIFICATION LEVEL UNCLASSIFIED	SCALE 1/1	SHEET 1 OF 1	

NOTES

1. MATERIAL: BRASS, .250 DIA

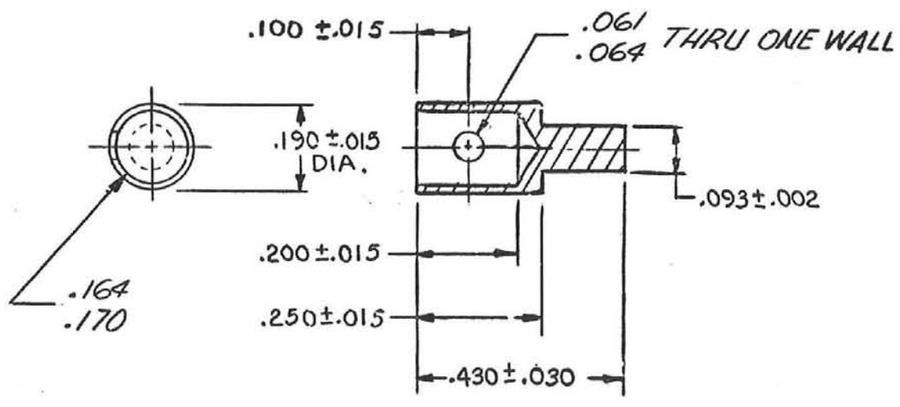

DESIGN AGENCY PART [redacted] NO.	REVISIONS					
	ISSUE	DESCRIPTION	PREPARED BY	DATE	CHKR	ENGR.
P90338-000	A		J.GONZALEZ (CD) 7652-2 / D.LIST 9123	7/1/70		DB

AGENCY APPROVALS		
ORG	DATE	INITIALS

SHEET	1				
ISSUE	A				

SHEET INDEX

PART CLASSIFICATION
UNCLASSIFIED

DWG CLASSIFICATION LEVEL
UNCLASSIFIED

TITLE
ADAPTOR CENTER CONDUCTOR TYPE HJ4-50

SIZE	CODE IDENT NO.	DWG NUMBER
B	14213	P90338
SCALE 4/1		SHEET 1 OF 1

DESIGN AGENCY PART [redacted] NO.	REVISIONS					
	ISSUE	DESCRIPTION	PREPARED BY	DATE	CHKR	ENGR.
P90339-000	A	I.MEDINA (co) 7652-2	D.LIST 9123	7/1/70		DB

NOTES

1. MATERIAL: ALUMINUM ALLOY, 7075-T6, 1.750 × .750 PLATE.

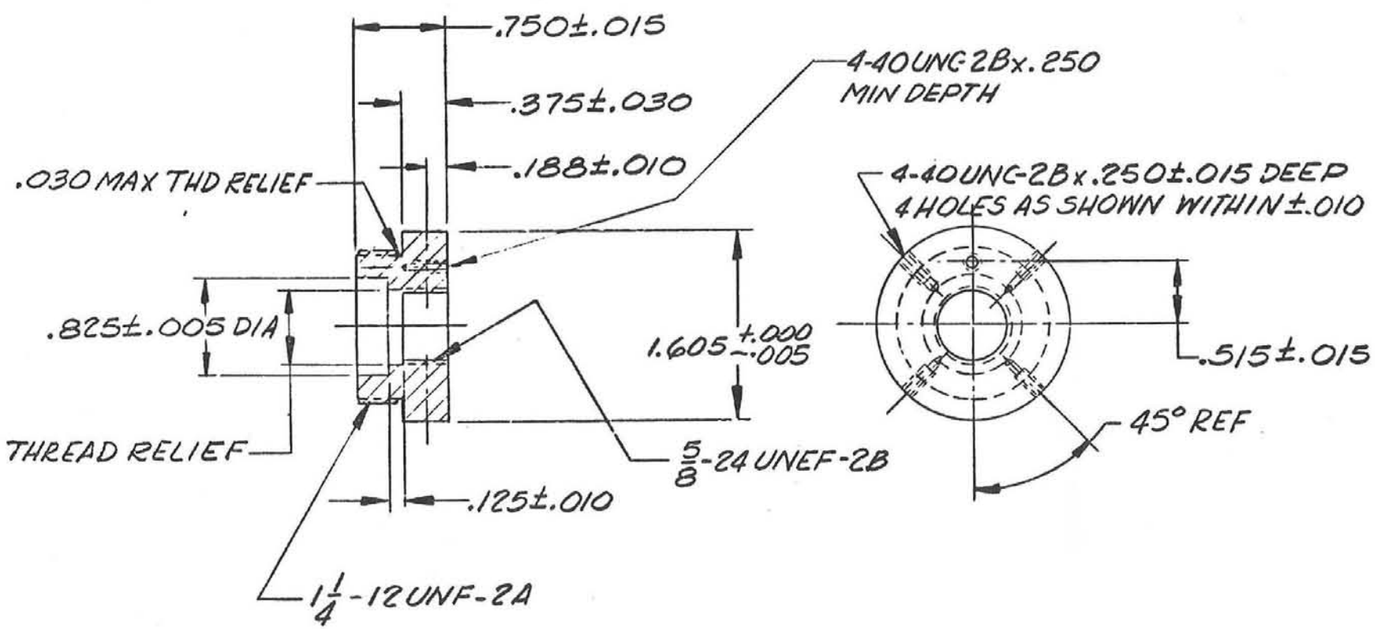

AGENCY APPROVALS			SHEET 1	TITLE
ORG	DATE	INITIALS	ISSUE A	END CAP, TYPE N
			SHEET INDEX	
			PART CLASSIFICATION UNCLASSIFIED	SIZE B / CODE IDENT NO. 14213 / DWG NUMBER P90339
			DWG CLASSIFICATION LEVEL UNCLASSIFIED	SCALE 1/1 / SHEET 1 OF 1

DESIGN AGENCY PART [redacted] NO.	REVISIONS					
	ISSUE	DESCRIPTION	PREPARED BY	DATE	CHKR	ENGR.
P90340-000	A	I.MEDINA (D)7652-2/D.LIST 9123		7/1/70		DTL

NOTES

1. MATERIAL: ALUMINUM ALLOY 7075-T6, 2.000 x .500 PLATE.

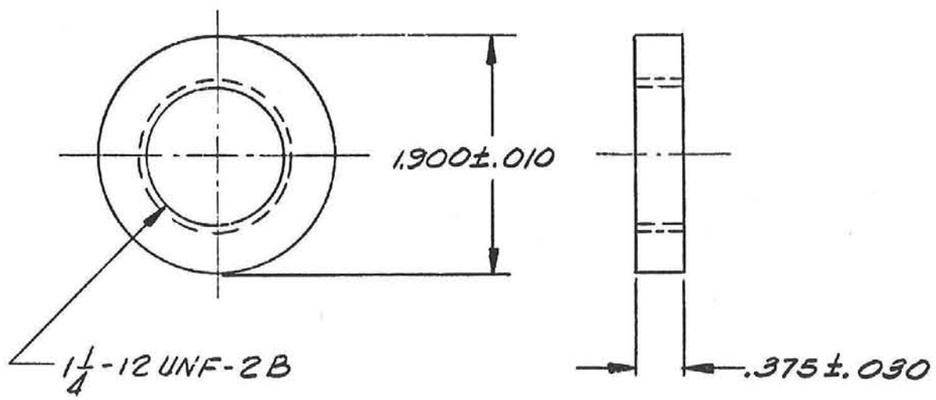

AGENCY APPROVALS			SHEET 1	TITLE
ORG	DATE	INITIALS	ISSUE A	RING
			SHEET INDEX	
			PART CLASSIFICATION: UNCLASSIFIED	SIZE B / CODE IDENT NO. 14213 / DWG NUMBER P90340
			DWG CLASSIFICATION LEVEL: UNCLASSIFIED	SCALE 1/1 / SHEET 1 OF 1

NOTES

1. MATERIAL: BRASS, .750 DIA.

DESIGN AGENCY PART [redacted] NO.	REVISIONS					
	ISSUE	DESCRIPTION	PREPARED BY	DATE	CHKR	ENGR.
P90341-000	A	I.MEDINA Ⓓ 7652-2	D.LIST 9/23	7/1/70		DBL

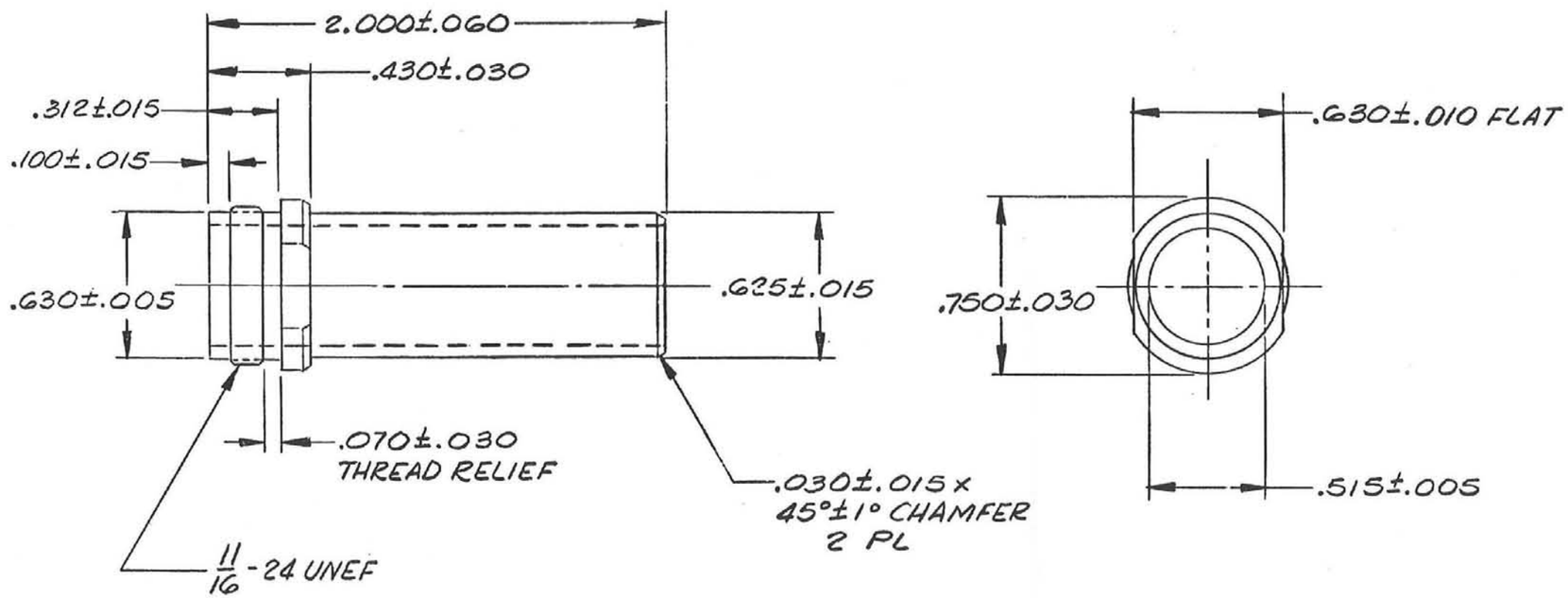

AGENCY APPROVALS			SHEET 1	TITLE
ORG	DATE	INITIALS	ISSUE A	ADAPTOR OUTER CONDUCTOR TYPE HJ4-50
			SHEET INDEX	
			PART CLASSIFICATION UNCLASSIFIED	SIZE B / CODE IDENT NO. 14213 / DWG NUMBER P90341
			DWG CLASSIFICATION LEVEL UNCLASSIFIED	SCALE 2/1 / SHEET 1 OF

DESIGN AGENCY PART [redacted] NO.	REVISIONS					
	ISSUE	DESCRIPTION	PREPARED BY	DATE	CHKR	ENGR.
P90342-000	A	I. MEDINA (D)7652-2/D. LIST 9123		7/1/70		DBL

NOTES

1. MATERIAL: BRASS, .625 DIA.

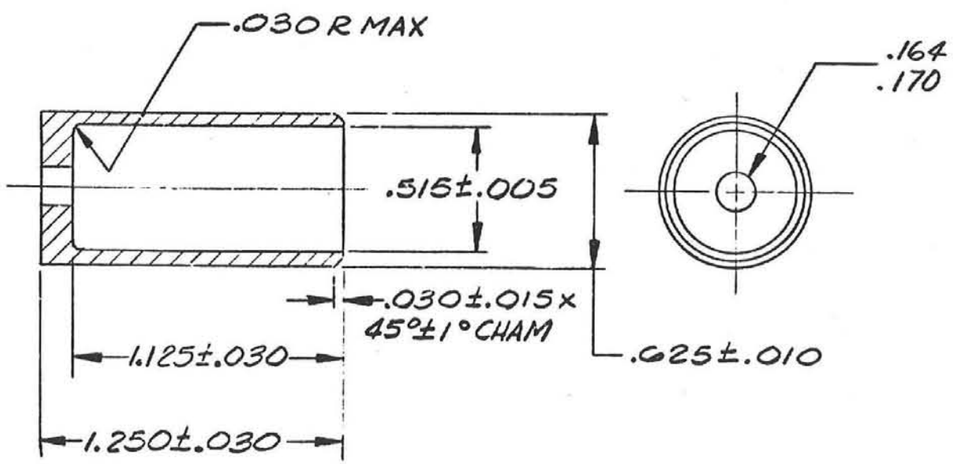

AGENCY APPROVALS			SHEET	1	TITLE
ORG	DATE	INITIALS	ISSUE	A	ANDREW HJ4-50 SHORTING CAP
			SHEET INDEX		
			PART CLASSIFICATION		
			UNCLASSIFIED		SIZE B / CODE IDENT NO. 14213 / DWG NUMBER P90342
			DWG CLASSIFICATION LEVEL		
			UNCLASSIFIED		SCALE 2/1 / SHEET 1 OF 1

D120345

DESIGN AGENCY PART [redacted] NO.	REVISIONS					
	ISSUE	DESCRIPTION	PREPARED BY	DATE	CHKR	ENGR.
T08944-000	A	BREEZE, 7652; D. BAFF, 9/25		10/18/71		

NOTES

1. GENERAL REQUIREMENTS ARE DEFINED IN 9900000-04.
2. MATERIAL: BRASS BAR, $\frac{1}{2}$ HARD.

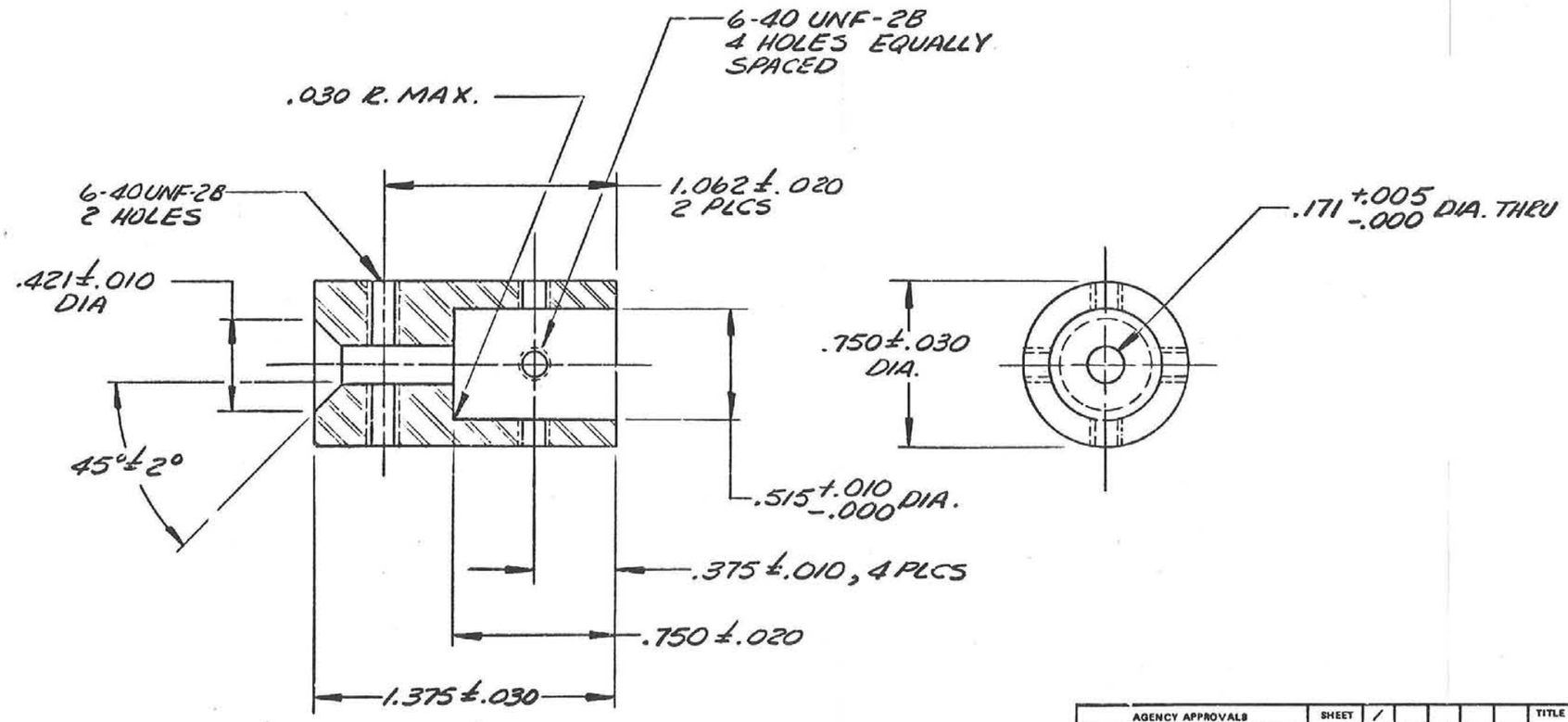

AGENCY APPROVALS			SHEET	1	TITLE
ORG	DATE	INITIALS	ISSUE	A	SLIFER CABLE SHORT
9/25	10/15/71	RJB	SHEET INDEX		
			PART CLASSIFICATION	UNCLASSIFIED	SIZE B / CODE IDENT NO. 14213 / DWG NUMBER T08944
			DWG CLASSIFICATION LEVEL	UNCLASSIFIED	SCALE 2/1 / SHEET 1 OF 1

NOTES

1. MATERIAL: ALUMINUM ALLOY, 6061-T6, 2.000 ± .020 DIA x .250 WALL.

DESIGN AGENCY PART [redacted] NO.	REVISIONS					
	ISSUE	DESCRIPTION	PREPARED BY	DATE	CHKR	ENGR
P90343-000	A	I.MEDINA (D) 7652-2 D.LIST 9123		7/1/70		DBL.

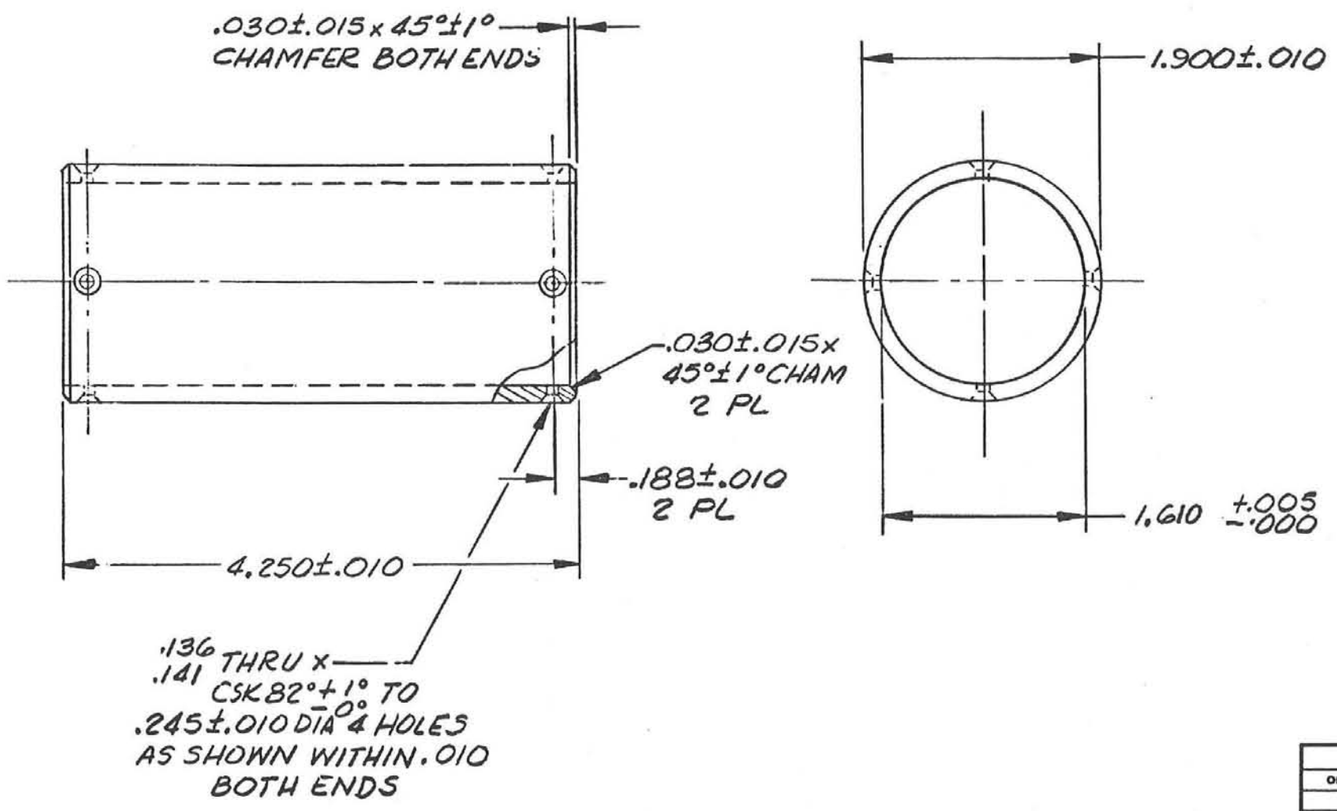

AGENCY APPROVALS			SHEET 1	TITLE		
ORG	DATE	INITIALS	ISSUE A	OSCILLATOR CAN		
			PART CLASSIFICATION UNCLASSIFIED			
			DWG. CLASSIFICATION LEVEL UNCLASSIFIED	SIZE B	CODE IDENT. NO. 14213	DWG. NUMBER P90343
				SCALE 1/1		SHEET 1 OF 1

REVISIONS					
ZN	SHEET AND ZONE	DESCRIPTION	DATE	CHKD	APPRD
1		MH DYKEMA 4413-5 11-25-64	11/16/65		
2		DATUMS DIMENSIONED NOTE 8B WAS TELEDYNAMICS HHD 3-26-65	7-9-65		
3		.285 ± .010 ADDED HHD 2213-5 8-30-65	9-13-65		

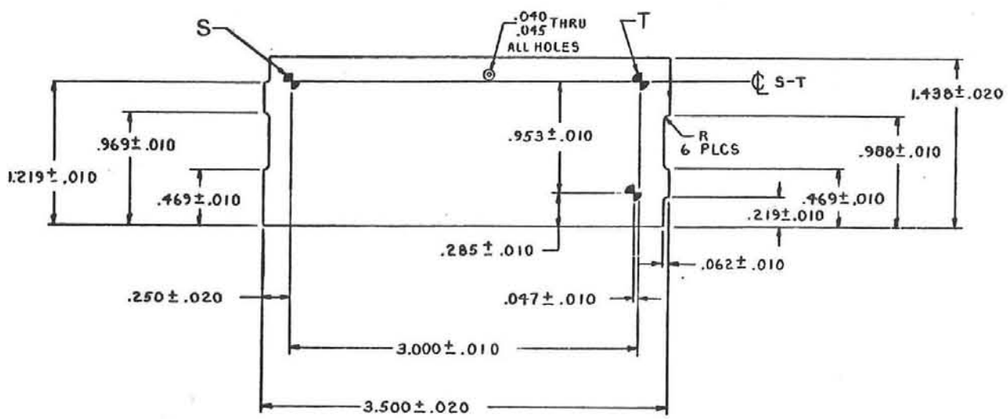

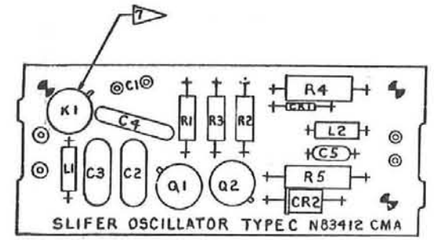

ALL CHANGES MADE ON THIS DWG AFFECTING THE ETCHED PATTERN MUST ALSO BE MADE ON CM- N83412

NOTES

1. MATERIAL: LAMINATED PLASTIC SHEET, GLASS BASE EPOXY RESIN, COPPER CLAD, FL-GF OR GH-DS2-C-2/2, PER MIL-P-13949 .062 THICKNESS.
2. MAKE PRINTED WIRING BOARD PER 9928001, TYPE I PLATING, CLASS 2, .001 MIN. THK.
3. HOLES TO BE LOCATED SO A MINIMUM OF .020 IS MAINTAINED BETWEEN EDGE OF HOLE AND EDGE OF CONDUCTOR.
4. ALL HOLES TO BE PLATED THRU.
5. SOLDER PRINTED CIRCUIT CONNECTION PER SG167683.
6. SUITABLE CAPACITOR TO BE SELECTED AND INSTALLED IN FIELD.
7. NOTE POSITION OF TAB BEFORE INSTALLING RELAY.
8. MAY BE OBTAINED FROM:
   - A. J. W. MILLER 5917 MAIN ST. LOS ANGELES 3, CALIF.
   - B. TELEDYNE PRECISION INC. SUB. OF TELEDYNE INC. HAWTHORNE, CALIF.
   - C. DYNAMIC PRODUCTS INC. PALISADES, N.J.
   - D. SPRAGUE ELECTRIC CO. NORTH ADAMS, MASS.
   - E. RADIO CORP. OF AMERICA, CAMDEN N.J.
   - F INTERNATIONAL RECTIFIER CORP., EL SEGUNDO, CAL.
   - G MOTOROLA SEMICONDUCTOR PROD. PHOENIX 8 ARIZ.
9. HOLE DIAMETERS APPLY AFTER PLATING.
10. INSULATING DISC SHOULD BE PLACED BETWEEN BOARD AND UNDERSIDE OF TRANSISTORS.

NO REQD	NO REQD	NO REQD	NO REQD	DESIGN AGENCY NUMBER	DESCRIPTION	NOTE	SHEET ZONE	ITEM
			AR		SOLDER	5		
			1	RC32GF201J	RESISTOR, 200 1W			R5
			1	RC32GF101J	RESISTOR, 100 1W			R4
			1	RC07GF103J	RESISTOR, 10K 1/4W			R3
			1	RC07GF682J	RESISTOR 6.8K 1/4W			R2
			1	RC07GF752J	RESISTOR, 7.5K 1/4W			R1
			1		TRANSISTOR, 2N697	8E		Q2
			1		TRANSISTOR, 2N697	8E		Q1
								16
			1		COIL, 9210-94	8A		L2
			1		COIL, 9310-38	8A		L1
								13
			1		RELAY, 410-6	7.8B		K1
								11
			1		DIODE 1N3020B	8G		CR2
			1		DIODE, 1N965	8F		CR1
								8
			1		CAPACITOR, 0.1UF, DISC CERAMIC, 50V	8D		C5
			1		CAPACITOR, 1000 UF	8C		C4
			1		CAPACITOR 7500 UUF, 10%, MYLAR			C3
			1		CAPACITOR 7500 UUF, 10%, MYLAR			C2
			1		CAPACITOR	8		C1
								2
								1

* DENOTES DOCUMENTS AS DENOTED AS # 30

LIST OF MATERIAL

DWG CLASSIFICATION LEVEL: UNCLASSIFIED	PART CLASSIFICATION: UNCLASSIFIED	SHEET 1 / ISSUE 3 — SHEET INDEX	
CLASSIFICATION CATEGORY	CHG / DATE / INITIALS	TITLE: SLIFER OSCILLATOR, TYPE C ASSEMBLY OF,	FIRST APPLICATION
	INFO AGENCY APPROVALS	INFO AGENCY NO.	SIZE F — DWG NO. N83412
		SCALE 2/1 — DOC. REF. STM.	SHEET 1 OF 1

DESIGN AGENCY PART OR CONTROL NO.	REVISIONS					
	ISSUE	SHEET ZONE	DESCRIPTION PREPARED BY	DATE	CHKR	ENGR
	1		HH DYKEMA 4413-5 11-20-64	3/1/65		CRO

PRINTED BOARD N83412 CMA

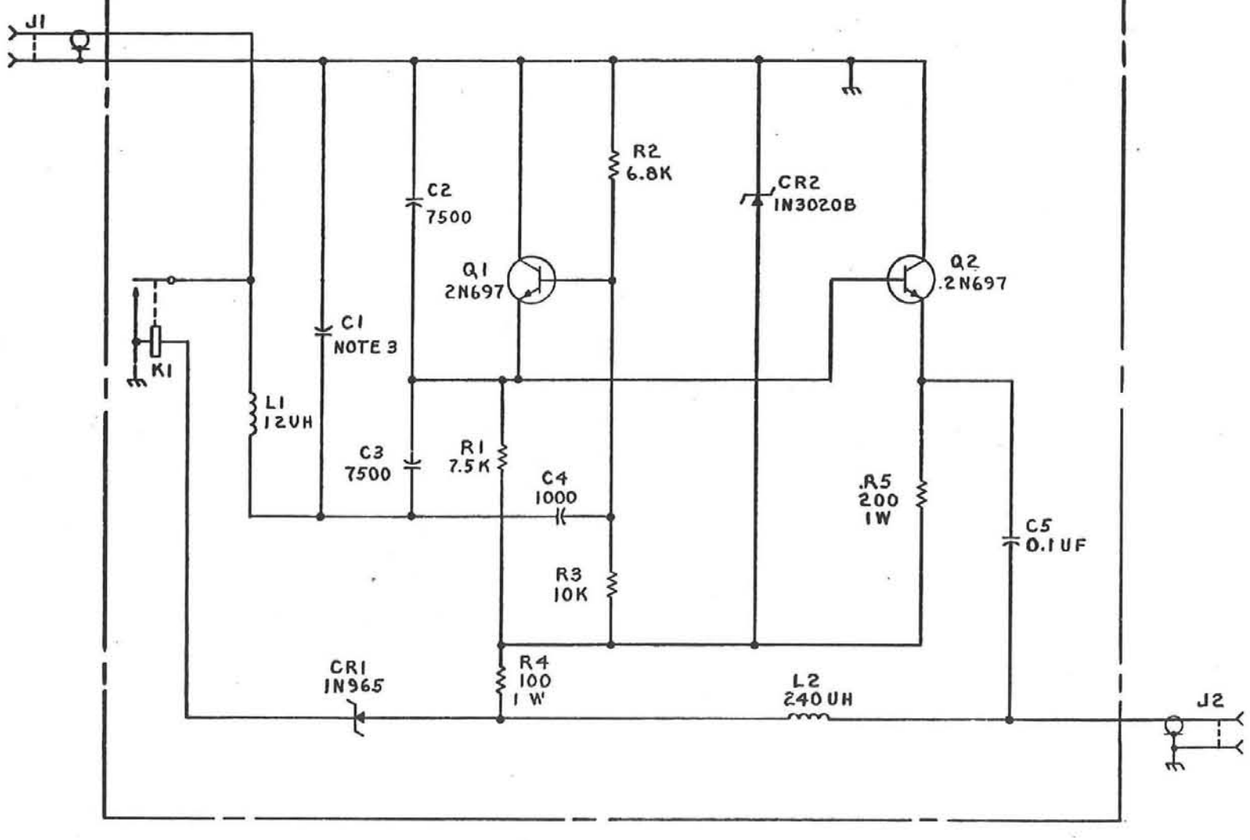

NOTES

1. UNLESS OTHERWISE SPECIFIED, RESISTANCE VALUES ARE IN OHMS.
2. UNLESS OTHERWISE SPECIFIED, CAPACITANCE VALUES ARE IN MICROFARADS.
3. CAPACITOR TO BE INSTALLED IN FIELD.

APPARATUS LIST

REF. DESIG.	VALUE	RATING TOL. %	RATING WATTS	RATING VOLTS	TYPE, PART, OR DRAWING NO. DESIGN AGENCY NO.		NOTE	REMARKS
C1							3	DURAMICA
C2	7500UUF	10						MYLAR
C3	7500UUF	10						MYLAR
C4	1000 UF							DURAMICA
C5	0.1UF			50	DISC CERAMIC			SPRAGUE
CR1					1N965			INTL. RECTIFIER
CR2					1N3020B			MOTOROLA.
J1					310150, SPECIAL			STODDART
J2					UG-58A/U			
K1					410-6			TELEDYNE
L1	12UH				9210-38			J. W. MILLER
L2	240UH				9210-94			J. W. MILLER
Q1					2N697			RCA
Q2					2N697			RCA
R1	7.5K		1/4					
R2	6.8K		1/4					
R3	10K		1/4					
R4	100		1					
R5	200		1					

SHEET 1
ISSUE 1
SHEET INDEX

DESIGN AGENCY APPROVALS: ORG | DATE | INITIALS

CLASSIFICATION CATEGORY

MFG AGENCY APPROVALS

DWG CLASSIFICATION LEVEL: UNCLASSIFIED

PART CLASSIFICATION

TITLE: SLIFER OSCILLATOR TYPE C

MFG AGENCY NUMBER

SIZE D | DWG NUMBER CKN83412

SCALE NONE | SHEET 1 OF 1

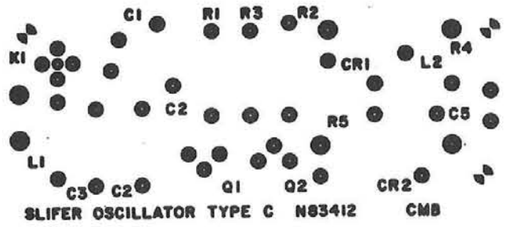

SIDE ONE

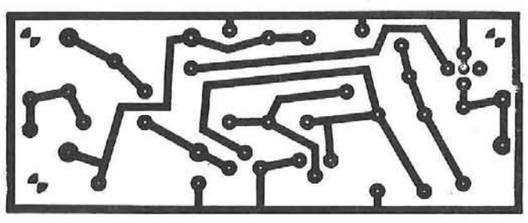

SIDE TWO

WO 64995

DESIGN AGENCY PART OR CONTROL NO.	REVISIONS				
	ISSUE	DESCRIPTION PREPARED BY	DATE	CHKR	ENGR
	1	NELSON, NJ 4411-5	1-8-65		RED
	2	ADDED LANDS. CMB WAS CMA. MACHOTA, N.J. 2211-5	4-27-65		EKD

SHEET 1 2 / ISSUE 2 2	DESIGN AGENCY APPROVALS	TITLE	
SHEET INDEX	ORG / DATE / INITIALS	MASTER, PRINTED CIRCUIT	
CLASSIFICATION CATEGORY	MFG AGENCY APPROVALS	MFG AGENCY NUMBER	
DWG CLASSIFICATION LEVEL UNCLASSIFIED	PART CLASSIFICATION	SIZE B	DWG NUMBER CMN83412

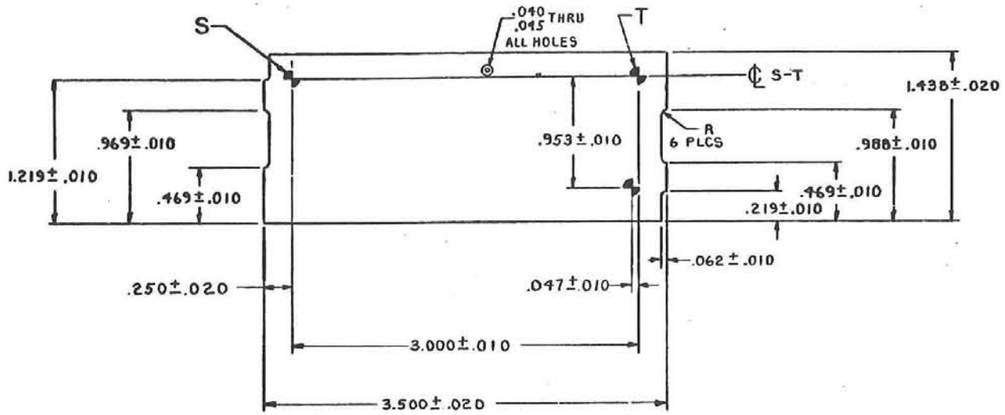

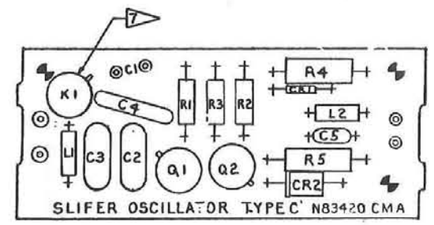

REVISIONS					
ZONE	SHEET AND ZONE	DESCRIPTION PREPARED BY	DATE	CHKD	DWGS
1		MH DYKEMA 4413-5 11-25-64			
2		DATUMS DIMENSIONED NOTE 8B WAS TELEDYNAMICS			
3		C2-43 WERE 7500UUF MYLAR MHD 2213-5 6-1-65			

ALL CHANGES MADE ON THIS DWG AFFECTING THE ETCHED PATTERN MUST ALSO BE MADE ON CM-N83420

NOTES,

1. MATERIAL: LAMINATED PLASTIC SHEET, GLASS BASE EPOXY RESIN, COPPER CLAD, FL-GF OR GH-062-C-2/2, PER MIL-P-13949 .062 THICKNESS.
2. MAKE PRINTED WIRING BOARD PER 9928001, TYPE I PLATING, CLASS 2, .001 MIN. THK.
3. HOLES TO BE LOCATED SO A MINIMUM OF .020 IS MAINTAINED BETWEEN EDGE OF HOLE AND EDGE OF CONDUCTOR.
4. ALL HOLES TO BE PLATED THRU.
5. SOLDER PRINTED CIRCUIT CONNECTION PER SG167683.
6. SUITABLE CAPACITOR TO BE SELECTED AND INSTALLED IN FIELD.
7. NOTE POSITION OF TAB BEFORE INSTALLING RELAY.
8. MAY BE OBTAINED FROM:
   - A. J. W. MILLER 5917 MAIN ST. LOS ANGELES 3, CALIF.
   - B. TELEDYNE PRECISION INC. SUB. OF TELEDYNE INC. HAWTHORNE, CALIF.
   - C. DURAMIC PRODUCTS INC. PALISADES, N.J.
   - D. SPRAGUE ELECTRIC CO. NORTH ADAMS, MASS.
   - E RADIO CORP OF AMERICA, CAMDEN N.J
   - F INTERNATIONAL RECTIFIER CORP., EL SEGUNDO CAL.
   - G MOTOROLA SEMICONDUCTOR PROD., PHOENIX 8 ARIZ.
9. HOLE DIAMETERS APPLY AFTER PLATING.
10. INSULATING DISC SHOULD BE PLACED BETWEEN BOARD AND UNDERSIDE OF TRANSISTORS.

NO REQD	NO REQD	NO REQD	NO REQD	DESIGN AGENCY NUMBER	DESCRIPTION	NOTE	SHEET ZONE	ITEM
		AR			SOLDER	5		
		1		RC32GF201J	RESISTOR 200 1W			R5
		1		RC32GF101J	RESISTOR 100 1W			R4
		1		RC07GF103J	RESISTOR 10K 1/4W			R3
		1		RC07GF682J	RESISTOR 6.8K 1/4W			R2
		1		RC07GF302J	RESISTOR, 3K 1/4W			R1
		1			TRANSISTOR, 2N697	8E		Q2
		1			TRANSISTOR, 2N697	8E		Q1
								16
		1			COIL, 9210-94	8A		L2
		1			COIL, 9322-18	8A		L1
								13
		1			RELAY, 410-6	7,8B		K1
								11
		1			DIODE 1N3020B	8G		CR2
		1			DIODE, 1N965	8F		CR1
								8
		1			CAPACITOR, 0.1UF, DISC CERAMIC, 50V	8D		C5
		1			CAPACITOR, 1000 UF	8C		C4
		1			CAPACITOR 4700 UUF, 10%, DIPPED MICA			C3
		1			CAPACITOR 4700 UUF, 10%, DIPPED MICA			C2
		1			CAPACITOR	6		C1
								2
								1

A DENOTES DOCUMENTS
AB DENOTES AB REQD

LIST OF MATERIAL

DWG CLASSIFICATION LEVEL: UNCLASSIFIED	PART CLASSIFICATION: UNCLASSIFIED	SHEET 1 / ISSUE 4 — SHEET INDEX	
CLASSIFICATION CATEGORY	ORG / DATE / INITIALS	TITLE: SLIFER OSCILLATOR, TYPE C ASSEMBLY OF,	FIRST APPLICATION
	INFO AGENCY APPROVALS	INFO AGENCY NO.	SIZE F / DWG NO. N83420
		SCALE 2/1 / DOC. REF. SYM.	SHEET 1 OF 1

NOTES

1. UNLESS OTHERWISE SPECIFIED, RESISTANCE VALUES ARE IN OHMS.
2. UNLESS OTHERWISE SPECIFIED, CAPACITANCE VALUES ARE IN MICROFARADS.

▷ CAPACITOR TO BE INSTALLED IN FIELD.

DESIGN AGENCY PART OR CONTROL NO.	REVISIONS					
	ISSUE	SHEET ZONE	DESCRIPTION	DATE	CHKR	ENGR
	1		HH DYKEMA 4413-5 11-20-64	.		
	2		C2 & C3 WERE 7500 UUF MYLAR HH.D. 2213-5 6-1-65			

PREPARED BY

PRINTED BOARD N83420 CMA

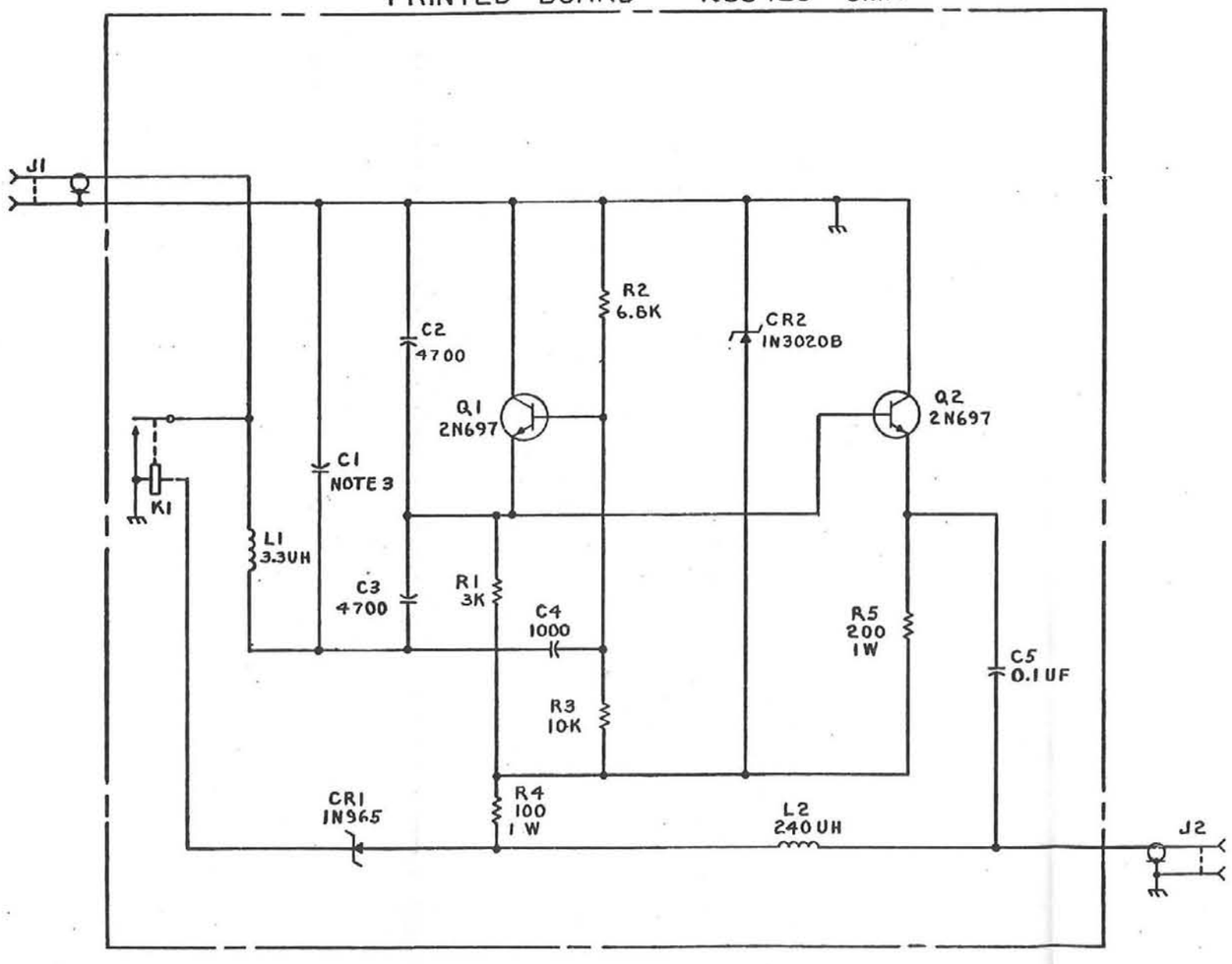

APPARATUS LIST

REF. DESIG.	VALUE	RATING TOL. %	RATING WATTS	RATING VOLTS	TYPE, PART, OR DRAWING NO. DESIGN AGENCY NO.		NOTE	REMARKS
C1							3	DURAMICA
C2	4700 UUF	10						DIPPED MICA
C3	4700 UUF	10						DIPPED MICA
C4	1000 UF							DURAMICA
C5	0.1UF			50	DISC CERAMIC			SPRAGUE
CR1					1N965			INTL. RECTIFIER
CR2					1N3020B			MOTOROLA
J1					310150, SPECIAL			STODDART
J2					UG-58A/U			
K1					410-6			TELEDYNE
L1	3.3UH				9320-18			J. W. MILLER
L2	240UH				9210-94			J. W. MILLER
Q1					2N697			RCA
Q2					2N697			RCA
R1	3K		1/4					
R2	6.8K		1/4					
R3	10K		1/4					
R4	100		1					
R5	200		1					

SHEET 1 ISSUE 2

SHEET INDEX

CLASSIFICATION CATEGORY

DESIGN AGENCY APPROVALS: ORG | DATE | INITIALS

MFG AGENCY APPROVALS

DWG CLASSIFICATION LEVEL: UNCLASSIFIED

PART CLASSIFICATION

TITLE: SLIFER OSCILLATOR TYPE C'

MFG AGENCY NUMBER

SIZE D | DWG NUMBER CKN83420

SCALE NONE | SHEET 1 OF 1

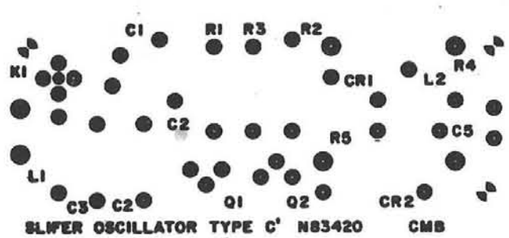

SLIFER OSCILLATOR TYPE C' N83420 CMB

SIDE ONE

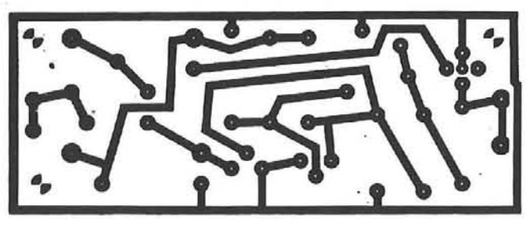

SIDE TWO

WO 64995

DESIGN AGENCY PART OR CONTROL NO.	REVISIONS				
	ISSUE	DESCRIPTION PREPARED BY	DATE	CHKR	ENGR
	1	NELSON, N J 4411-5	1-8-65		DRD
	2	ADDED LANDS. CM3 WAS CM4. MACHOTA, N.J. 2211-5	4-27-65		DRD

SHEET 1 2 / ISSUE 2 2	DESIGN AGENCY APPROVALS	TITLE	
SHEET INDEX	ORG / DATE / INITIALS	MASTER, PRINTED CIRCUIT	
CLASSIFICATION CATEGORY	MFG AGENCY APPROVALS	MFG AGENCY NUMBER	
DWG CLASSIFICATION LEVEL: UNCLASSIFIED	PART CLASSIFICATION	SIZE B	DWG NUMBER CMN83420

DESIGN AGENCY PART [redacted] NO.	ISSUE	SHEET ZONE	DESCRIPTION / PREPARED BY	DATE		
P73592-000	A		W. LARSON (ED) 7652 D. LIST 9123	4/25/69		
	B		MS16698-43 WAS MS16697-34 G JEYS 5-13-69 7652-2 D.LIST 9123	5/23/69		
	C	–	MS16697-59 WAS MS16698-43. D.HUMPHREYS,7652/1-13-71/D.LIST,9123.	3/31/71		

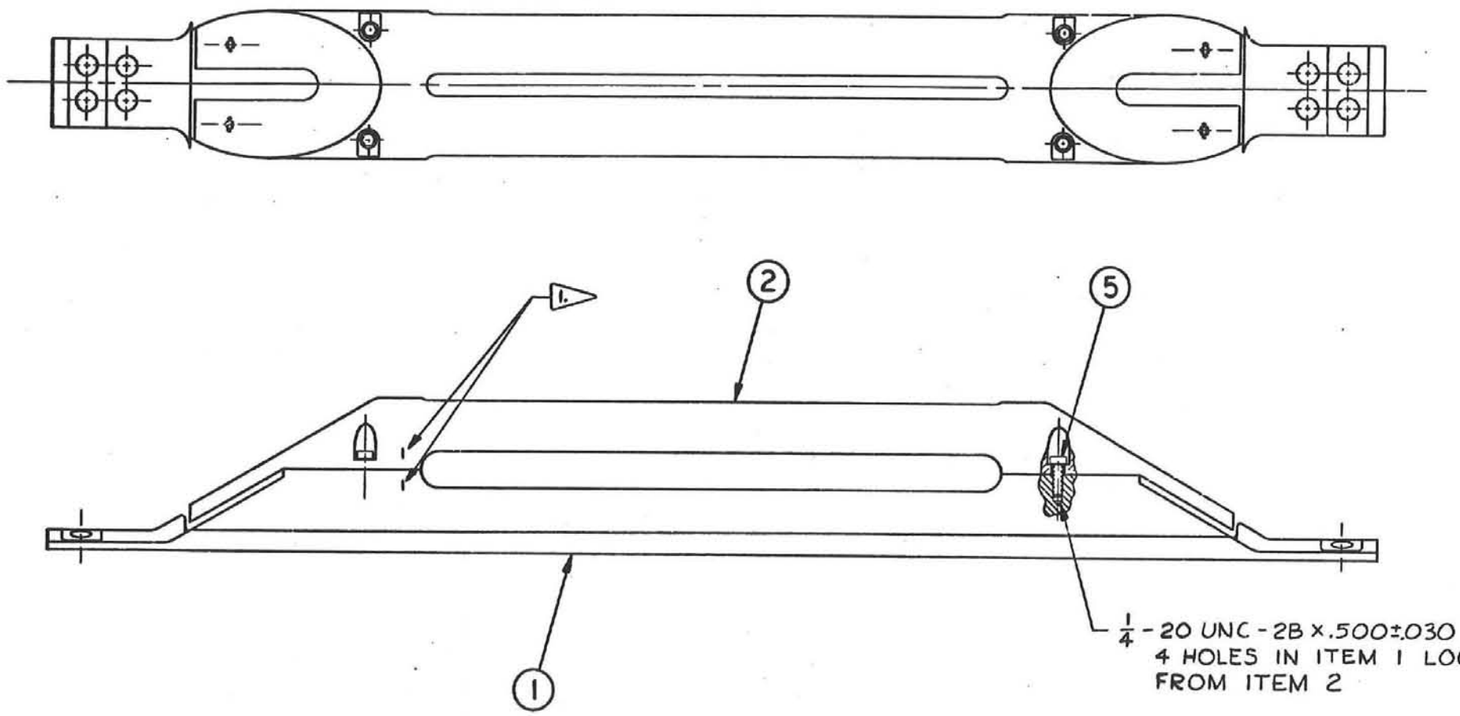

NOTES

1. MARK PER 9919100, CLASS C-1, .250 INCHES HIGH, SERIAL MARKING 1,2,3,4,5 -- / 1,2,3,4,5 -- FOR MATCHING PARTS AT ASSEMBLY.

NO REQD	DESIGN AGENCY NUMBER	DESCRIPTION	NOTE	SHEET ZONE	ITEM
4	MS16997-59	SCREW, SOC HD, 1/4-20 UNC X5/8 LG (870589)			5
					4
					3
1	P72495-000	SLIFER & CAPLE PROTECTOR, TOP			2
1	P72440-000	SLIFER & CABLE PROTECTOR, BOTTOM			1
NA	9919100-01	MARKING, GENERAL METHOD			
NA	9900000-03	GENERAL REQUIREMENTS			

X DENOTES DOCUMENTS
AP DENOTES AS REQD

LIST OF MATERIAL

AGENCY APPROVALS		
ORG	DATE	APPROVALS
9123	4/25/69	DEX
7652	4-24-69	[illegible]

SHEET 1
ISSUE C
SHEET INDEX

PART CLASSIFICATION
UNCLASSIFIED

DWG CLASSIFICATION LEVEL
UNCLASSIFIED

TITLE
SLIFER & CABLE PROTECTOR ASSEMBLY

SIZE	CODE IDENT. NO.	DWG NUMBER
D	14213	P73592
SCALE 1/2		SHEET 1 OF 1

NOTES

1. MATL: ALUM ALMAG CASTING ALLOY.
2. ALL FILLETS .250 R ±.030 UNLESS OTHERWISE SPECIFIED.

DESIGN AGENCY PART IDENTIFICATION NO.	REVISIONS					
	SHEET	ZONE	DESCRIPTION	PREPARED BY	DATE	CHKD	ENGR
P72415-C00	A		D LIST 9123 3-28-64 G JEYS 7652-2		4/14/64		
	B		FILLET 2.750±.015 AND 1.375 ±.015 & .375±.030 DIMS. G JEYS 7652-2 4/28/64 D B LIST 9123		4/1/67		

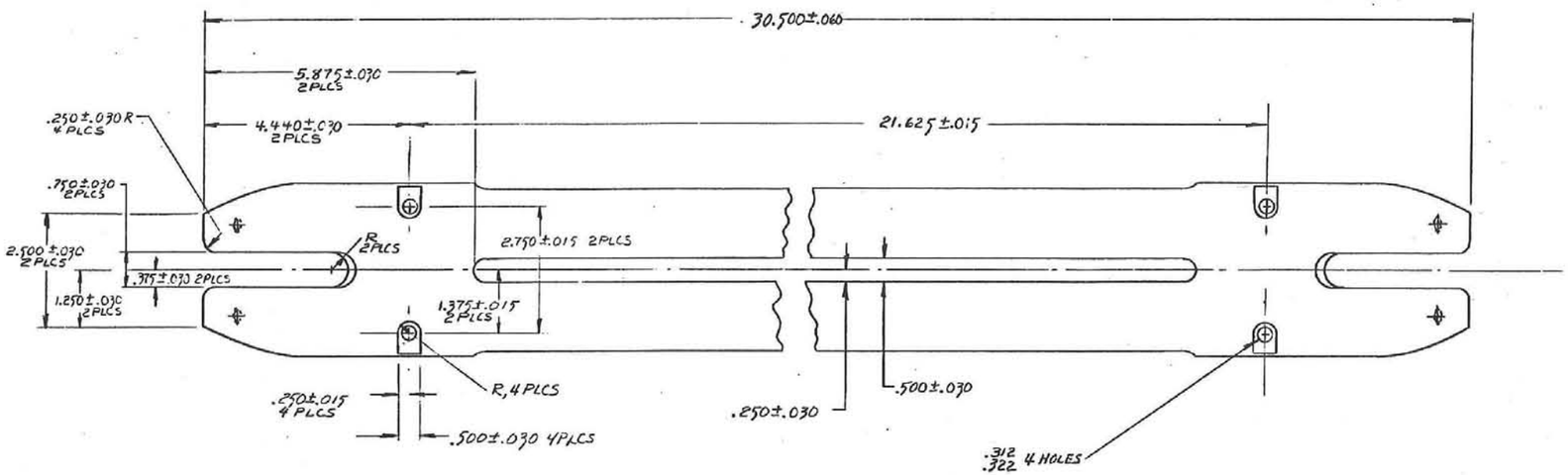

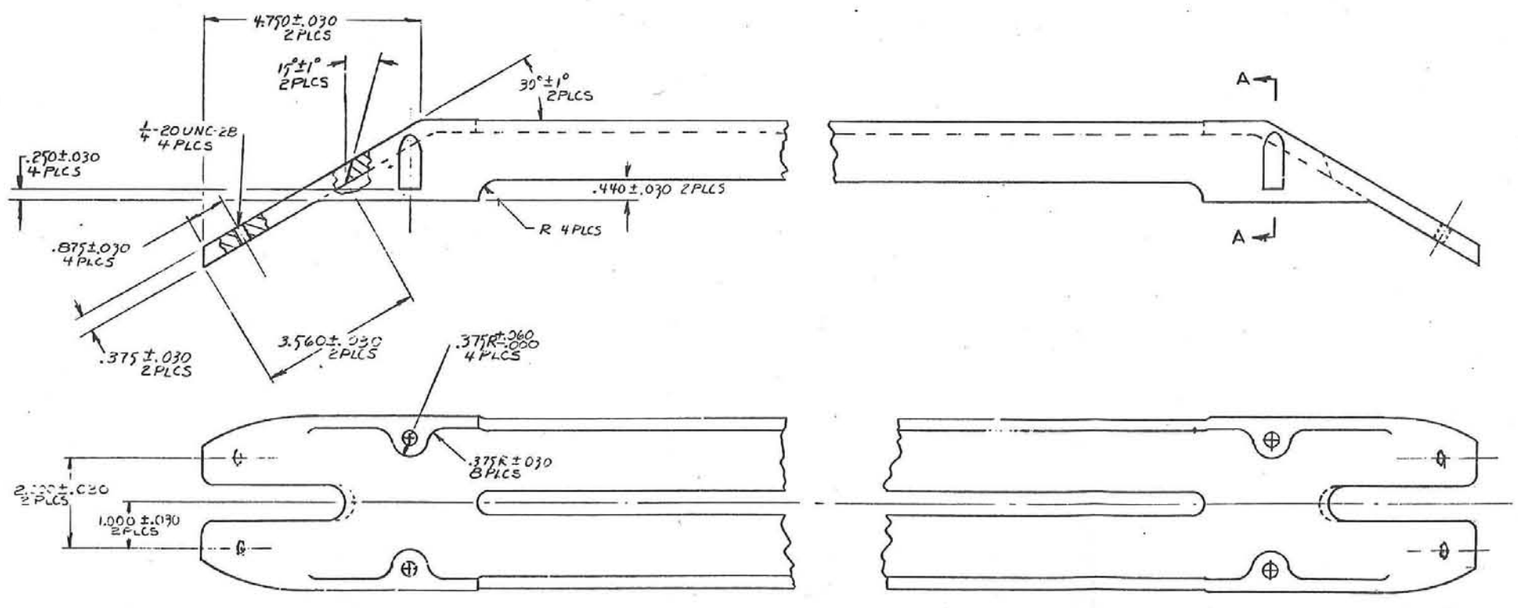

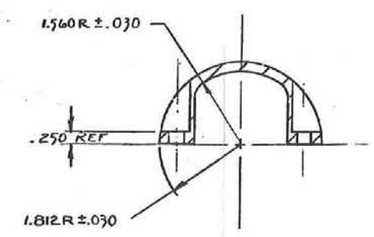

SECTION A-A

AGENCY APPROVALS			SHEET 1	TITLE
ORG	DATE	APPROVALS		SLIFER & CABLE PROTECTOR CASTING, TOP
			SHEET INDEX	
			PART CLASSIFICATION: UNCLASSIFIED	
			DWG CLASSIFICATION LEVEL: UNCLASSIFIED	SIZE E · CODE IDENT. NO. 14213 · DWG NUMBER P72415 · SCALE FULL · SHEET 1 OF

NOTES

1. MATL: ALWAYS ALUM CASTING ALLOY
2. ALL FILLETS TO BE .250 ±.030 UNLESS OTHERWISE SPECIFIED.

	A	[illegible]	7/14/69		
	B	MAKE SECTION B-B LETTERS ADDED 2.500±.030 [illegible]	9/[illegible]		
	C	REVISED SECTION B-B. 1-14-71 D.HUMPHREYS, 7652/D.LIST, 9123.	3/[illegible]		

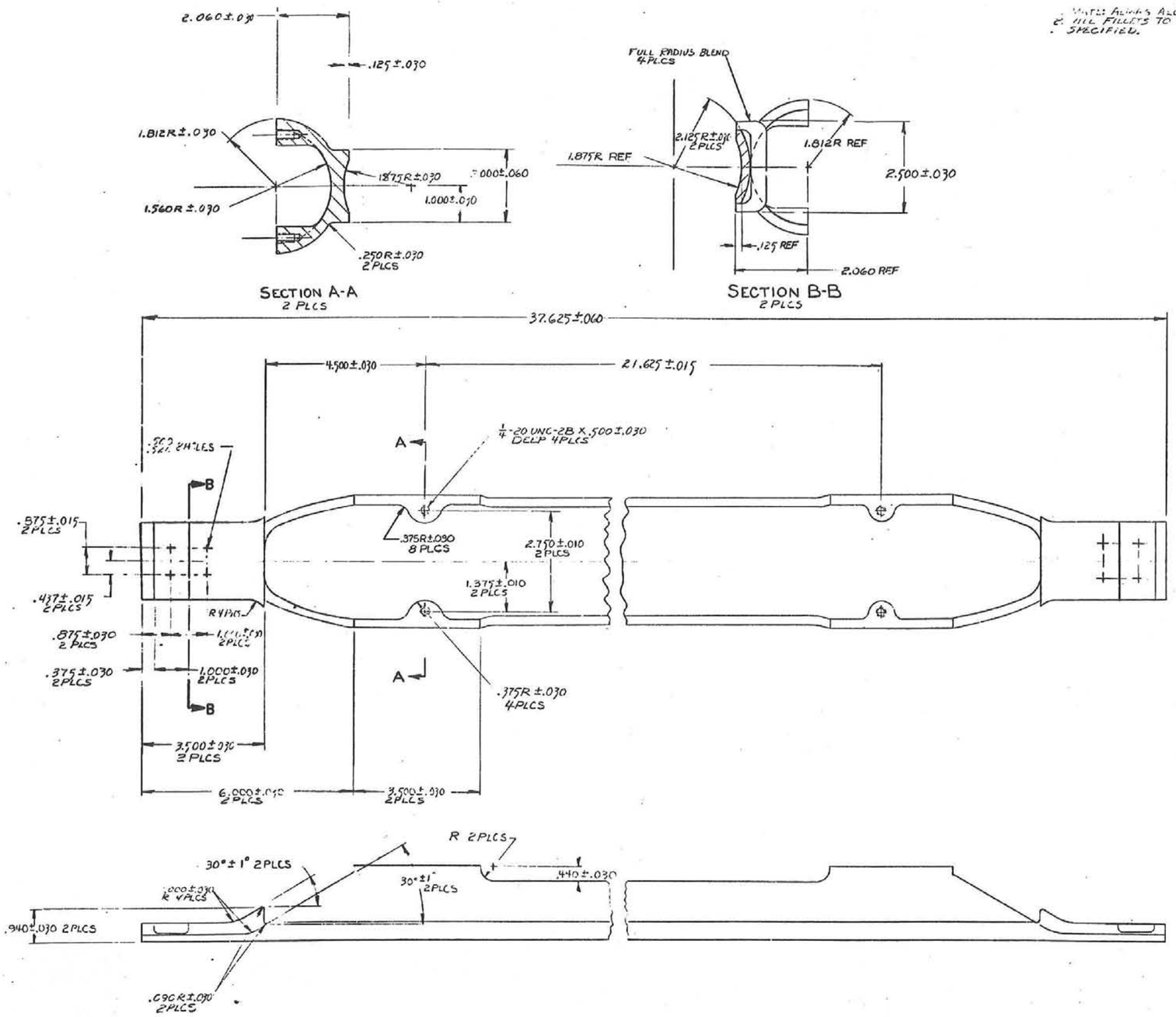

DESIGN AGENCY & PART OR CONTROL NO.	REVISIONS					
	ISSUE	SHEET ZONE	DESCRIPTION PREPARED BY	DATE	CHKD	ENGR
	1		HHDYKEMA 4413-5 12-16-64			
	2		DATUMS HOLES A & B, NOTES 8 & 9 ADDED. HHD 3-29-65			
	3		CIRCUITS REVISED 3-29-65			

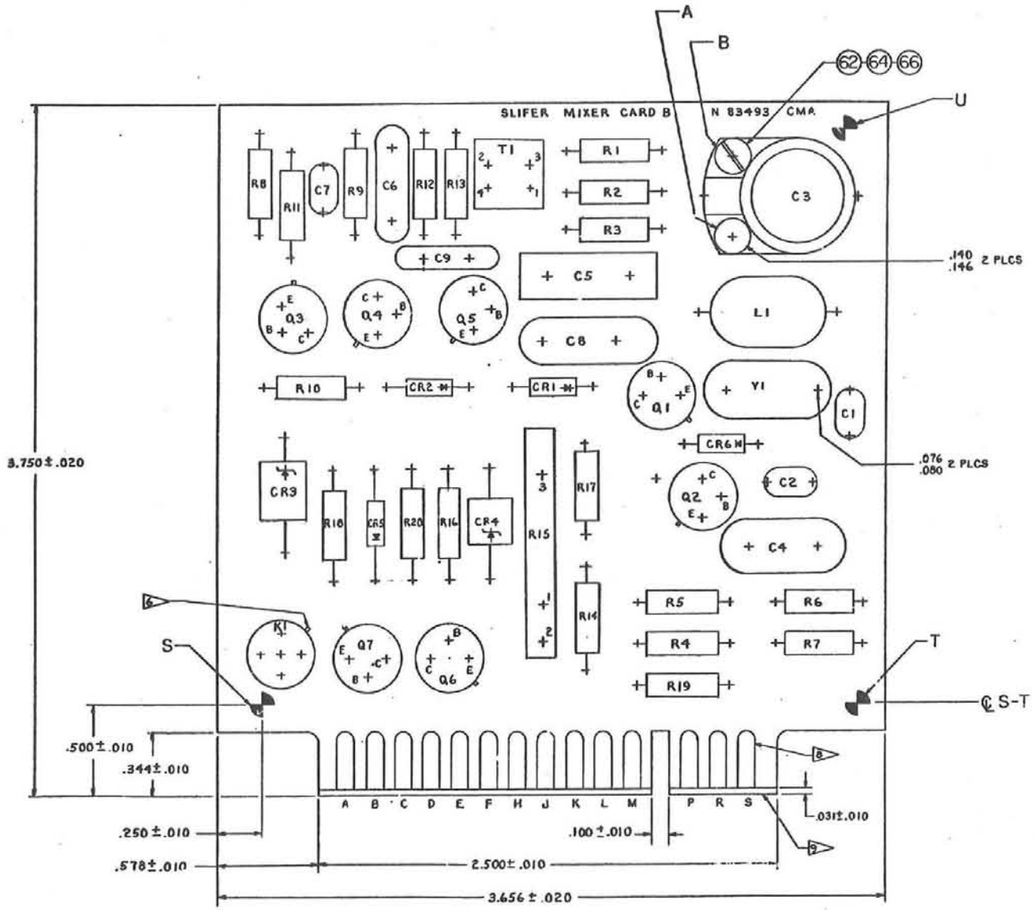

ALL CHANGES MADE ON THIS DWG AFFECTING THE ETCHED PATTERN MUST ALSO BE MADE ON CM-N83493

NOTES

1. MATERIAL: LAMINATED PLASTIC SHEET, GLASS BASE EPOXY RESIN, COPPER CLAD, FR-4 OR GM-061-C-D/2, PER MIL-P-13949 .062 THICKNESS.
2. MAKE PRINTED WIRING BOARD PER 9928001, TYPE 1 PLATING, CLASS 2, .001 INCH MINIMUM THICKNESS.
3. HOLES TO BE LOCATED SO A MINIMUM OF .020 IS MAINTAINED BETWEEN EDGE OF HOLE AND EDGE OF CONNECTOR.
4. ALL HOLES TO BE PLATED THRU EXCEPT THE TWO HOLES DIMENSIONED 100-148.
5. SOLDER PRINTED CIRCUIT CONNECTIONS PER 8018682.
6. NOTE POSITION OF TAB BEFORE INSTALLING RELAY.
7. MAY BE OBTAINED FROM:
   - A. R.C.A-SEMICONDUCTOR & MATERIAL DIV., SOMERVILLE, N.J.
   - B. TELEDYNE PRECISION INC., SUBSIDIARY OF TELEDYNE, INC. HAWTHORNE, CALIF.
   - C. DUBILIER PRODUCTS INC., PALISADES, N.J.
   - D. GENERAL ELECTRIC CO. APPARATUS SALES DIV., SCHENECTADY, N.Y.
   - E. INTERNATIONAL CRYSTAL MFG. CO. INC., OKLAHOMA CITY, OKLA.
   - F. PCA ELECTRONICS, INC., SEPULVEDA, CALIF.
   - G. INTERNATIONAL RECTIFIER CO., SUPULVEDA, CALIF.
   - H. SYLVANIA ELECTRIC PRODUCTS, INC. NEW YORK, N.Y.
   - J. GHNITE MFG. CO., SKOKIE, ILL.
   - K. HUGHES SEMICONDUCTOR DIV., NEWPORT BEACH CALIF.
   - L. JW MILLER 5917 SO MAIN ST LOS ANGELES 3 CALIF.
   - M BOURNS INC RIVERSIDE, CALIF.
   - N EFRATA-AB ELECTRONICS DIV. GLOBE-UNION INC., MILWAUKEE, 1, WISC.
8. RHODIUM PLATE CONNECTOR TABS (BOTH SIDES) PER 400056 (.0001 MINIMUM) WITH A NICKEL PLATE (.0005 MINIMUM) PER 9902105 AS A BASE. TABS SHOULD BE PLATED FOR THEIR FULL LENGTH.
9. CHAMFER 15° BOTH SIDES OF BOARD
10. COMPONENTS NOT IDENTIFIED BY ITEM NUMBERS ON THE ASSEMBLY ARE LOCATED IN THE MATERIAL LIST BY REFERENCE DESIGNATION.
11. HOLE DIAMETER APPLY AFTER PLATING.
12. INSULATING DISC SHOULD BE PLACED BETWEEN BOARD AND UNDERSIDE OF TRANSISTORS AND RELAY.
13. LANDS OF .109 DIA. SHOULD HAVE HOLES OF .042 ± .002 DIA.
14. LANDS OF .079 DIA. SHOULD HAVE HOLES OF .038 ± .002 DIA.

HOLE LOCATION & SIZE TABLE

HOLE NUMBER	X AXIS	Y AXIS	TOL	HOLE SIZE
DATUM T	3.250		.010	
" U	3.187	3.109	.010	
A	2.562	2.531	.010	
B	2.562	2.969	.010	

2	MS35733-26	WASHER, NO. 4 INTERNAL TEETH			
2	MS35649-42	NUT, HEX, 4-40UNC-2B			
2	MS35206-213	SCREW, PAN HD, 4-40UNC-2A 3/8 LG.			
AR		SOLDER	3		
1		CRYSTAL 750 KCPS F-605	RK		
1		TRANSFORMER TC-101-1	JF		
1		POTENTIOMETER 2300 2249P-1-501	PW		
1	RC07GF104J	RESISTOR 5.1 1/4 W FIXED COMP.			
1	RC07GF681J	680			
1	RC07GF332J	3.3K			
1	RC07GF362J	3.6K			
1	RC07GF512J	5.1K			
1	RC07GF272J	2.7K			
1	RC07GF221J	220			
1	RC07GF823J	82K			
1	RC07GF223J	22K			
1	RC07GF302J	30K			
1	RC07GF472J	4.7K			
1	RC07GF222J	2.2K			
1	RC07GF272J	2.7K			
1	RC07GF272J	2.7K			
1	RC07GF103J	10K			
1	RC07GF101J	100			
1	RC07GF751J	750			
1	RC07GF102J	1.0K			
1	RC07GF152J	1.5K			
1	RC07GF103J	10K			
1	RC07GF152J	1.5K			
1	RC07GF103J	RESISTOR 0.1 MEGO 1/4W FIXED COMP			
1		TRANSISTOR 2N1671	RK		
1		2N1131	RK		
1		2N697	RA		
1		2N697	RA		
1		2N1131	RK		
1		2N1131	RK		
1		TRANSISTOR 2N697	RA		
1		COIL: 4.7MHV, INDUCTANCE NO. 9220-10	RL		
1		RELAY 4510-24, 24 VDC	RJ		
1		DIODE 1N1341	RK		
1		1N965A ZENER	RG		
1		1N3021B ZENER	RG		
1		1N3030 ZENER	RG		
1		DIODE 1N497	RH		
1		CAPACITOR 1000 UUF 5% DIPPED MICA	RC		
1		.01 UF	RC		
1		200 UUF DIPPED MICA	RC		
1		2100UUF DIPPED MICA	RC		
1		0.1UF, 150VDC 29F-461	RD		
1		3100 UUF DIPPED MICA	RC		
1		1-15UUF, 522BH	RN		
1		1001UF DIPPED MICA	RC		
1		CAPACITOR 180UUF DIPPED MICA	RC		
1	CMN83493	PRINTED CIRCUIT BOARD	1		

DWG NO	REV	SHT	NO. REQD	DESIGN AGENCY NUMBER	NEW DESIGN	NOTE	WEIGHT ZONE	ITEM

LIST OF MATERIAL

SHEET 1 RAW 3 SHEET INDEX

CLASSIFICATION CATEGORY

DWG CLASSIFICATION LEVEL: UNCLASSIFIED

PART CLASSIFICATION: UNCLASSIFIED

DESIGN AGENCY APPROVALS: ORG DATE INITIALS

MFG AGENCY APPROVALS

TITLE: SLIFER MIXER, CARD B, ASSEMBLY OF

MFG AGENCY NUMBER

SIZE E DWG NUMBER CM N83493

SCALE 4/1 SHEET 1 OF 1

REVISIONS					
NO	SHEET AND ZONE	DESCRIPTION PREPARED BY	DATE	CHKD	APPD
1		H.H DYKEMA 4413-5-12-2-64			
2		REVISED HHD 4-20-64			

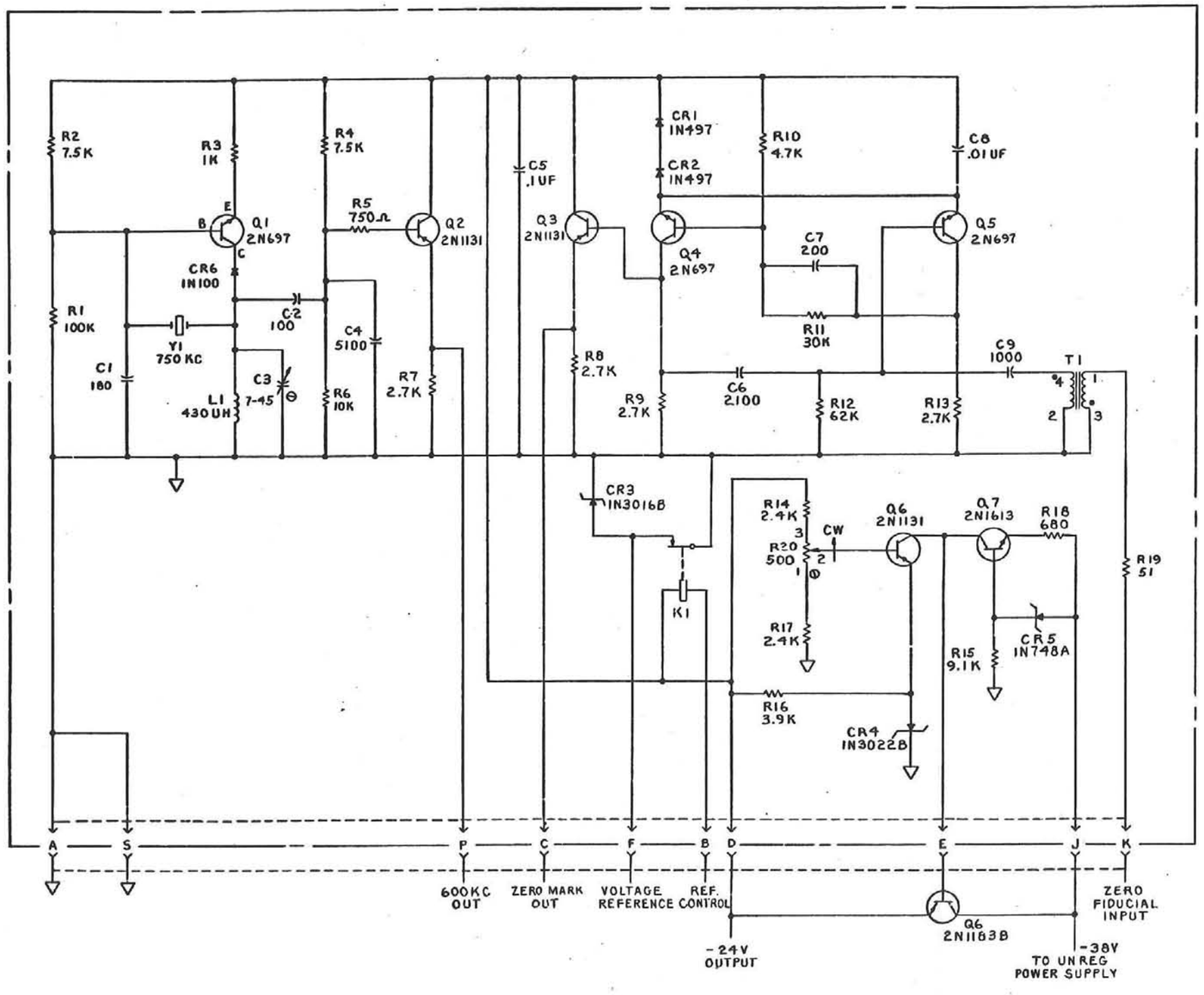

NOTES

1. RESISTANCE VALUES ARE IN OHMS UNLESS OTHERWISE SPECIFIED.
2. CAPACITANCE VALUES ARE IN MICROMICROFARADS UNLESS OTHERWISE SPECIFIED
3. ▽ INDICATES CIRCUIT RETURN.
4. ⊖ INDICATES SCREW DRIVER ADJUSTMENT.

DWG CLASSIFICATION LEVEL: UNCLASSIFIED	PART CLASSIFICATION	SHEET 1 / ISSUE 2 — SHEET INDEX	
CLASSIFICATION CATEGORY	ORG / DATE / INITIALS	TITLE SCHEMATIC, SLIFER MIXER, CARD B	FIRST APPLICATION
	MFG AGENCY APPROVALS	MFG AGENCY NO.	SIZE F / DWG NO. CKN83493
		SCALE NONE / DOC. REV. EVAL.	SHEET 1 OF 1

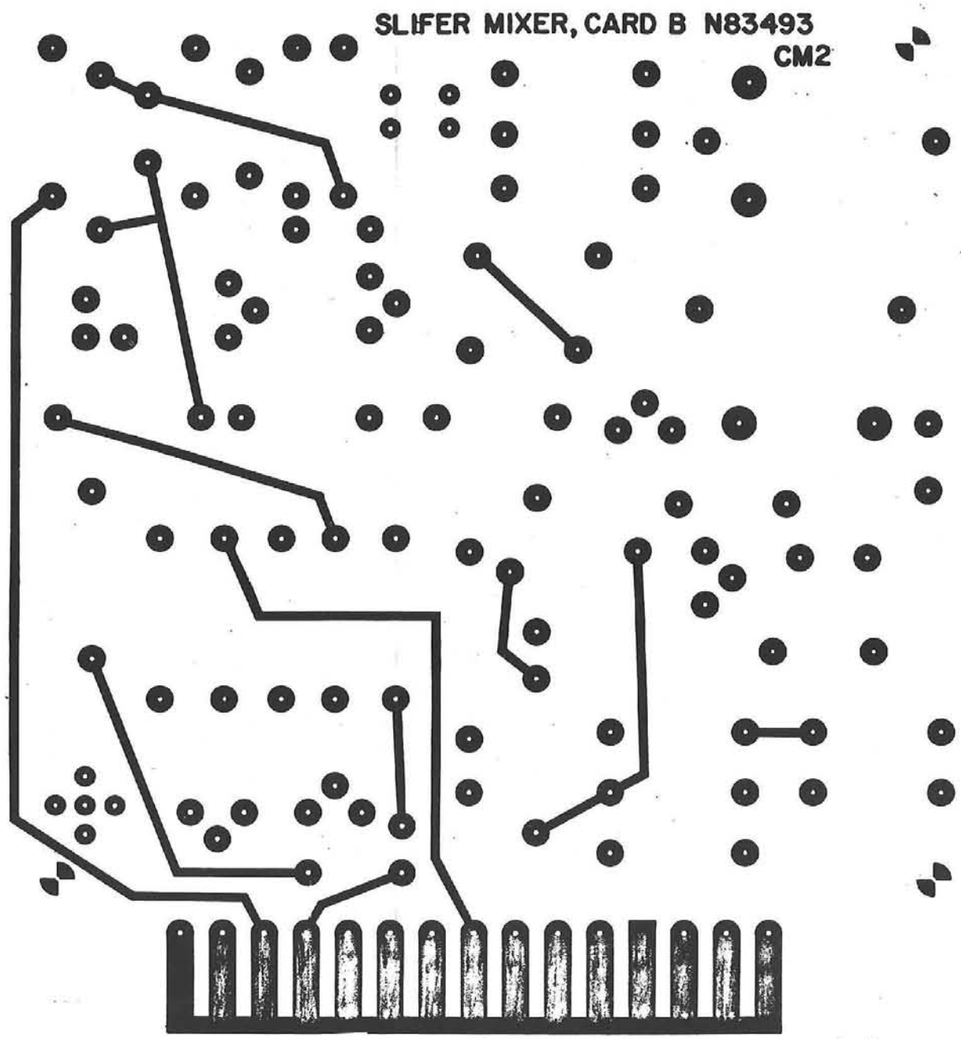

SIDE ONE

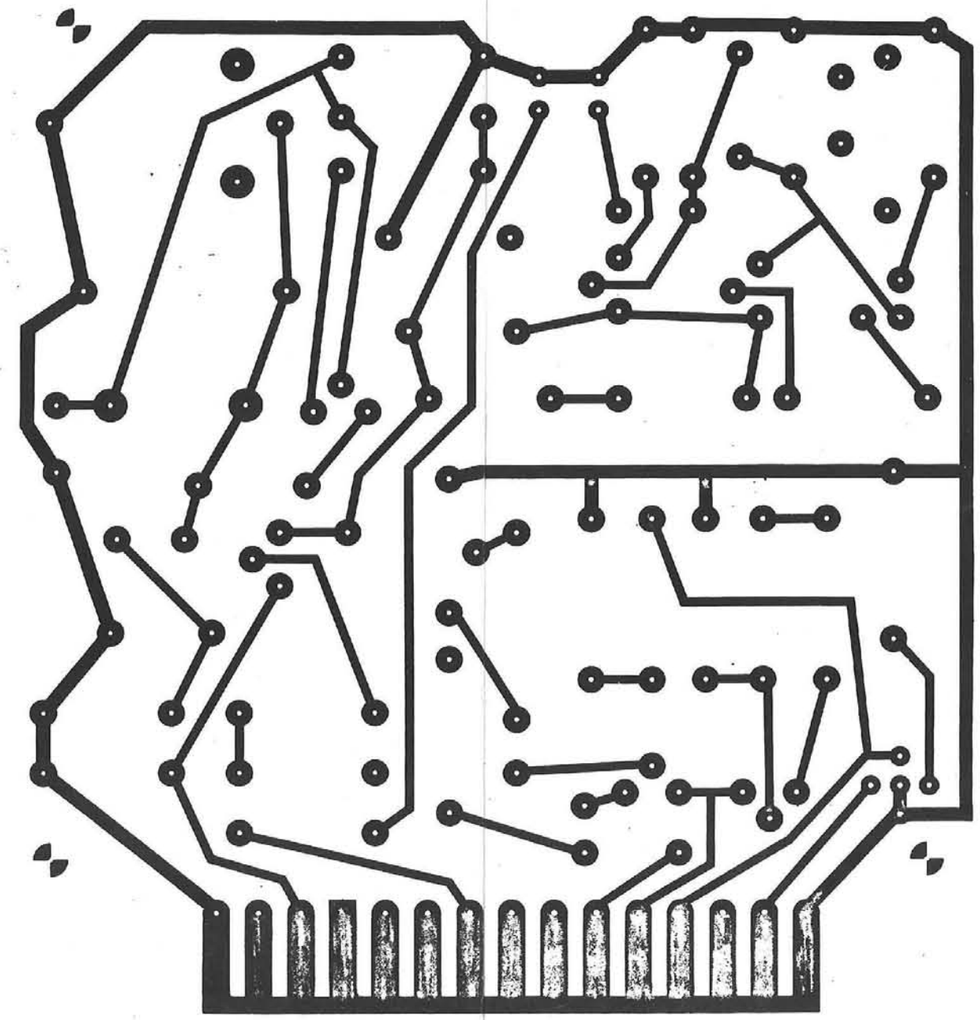

SIDE TWO

DESIGN AGENCY CONTROL NO.	REVISIONS ISSUE	SHEET ZONE	DESCRIPTION PREPARED BY	DATE	CHKR	ENGR
CMN83493-000	1		1-28-65 NELSON, NJ 2211-5	2-3-65		DMP
CMN83493-001	2		REVISED CIRCUITRY. CM1 WAS CMO. NELSON, NJ 2211-5	5-26-65		DAB
CMN83493-002	3		REVISED CIRCUITRY; CM2 WAS CM1; JACKSON, J.C. 2211-5	8/25/65		DRB

SHEET 1 2	DESIGN AGENCY APPROVALS		TITLE
ISSUE 3 3	ORG	DATE	INITIALS	MASTER, PRINTED CIRCUIT
SHEET INDEX			
CLASSIFICATION CATEGORY			
	MFG AGENCY APPROVALS		
			MFG AGENCY NUMBER
DWG CLASSIFICATION LEVEL UNCLASSIFIED	PART CLASSIFICATION		SIZE D / DWG NUMBER CMN83493

DISTRIBUTION:

US ERDA (6)
Washington, DC 20545
Attn: Gen. E. B. Giller (1)
Maj. A. J. Johnson (2)
R. T. Duff (2)
R. Richards (1)

State Department
Washington, DC 20520
Attn: E. Ifft

Commander, Field Command (2)
Defense Nuclear Agency
Kirtland Air Force Base
Albuquerque, NM 87115
Attn: Col. K. D. McAllister
FCTD-D

University of California (4)
Lawrence Livermore Laboratory
P.O. Box 808
Livermore, CA 94550
Attn: M. D. Nordyke
A. Holzer
C. Seismore
C. Olsen

Los Alamos Scientific Laboratory (3)
P.O. Box 1663
Los Alamos, NM 87545
Attn: D. Westervelt
D. D. Eilers
H. C. Goldwire

1100 C. D. Broyles
1110 J. D. Kennedy
1111 C. R. Mehl
1111 L. J. Vortman
1111 R. C. Bass (3)
1111 G. E. Larsen
1120 G. E. Hansche
1123 B. C. Benjamin (5)
1123 D. R. Breding (3)
1123 H. M. Miller (5)
1130 H. E. Viney
1131 B. G. Edwards
1131 A. J. Brouillard (5)
1150 J. R. Banister
1152 D. M. Ellett
1352 P. A. Stokes
8266 E. A. Aas (2)
3141 C. A. Pepmueller (Actg) (5)
3151 W. L. Garner (3)
For: ERDA/TIC (Unlimited Release)
ERDA/TIC (25)
(R. P. Campbell, 3171-1)