SAND75-0657
Unlimited Release

Results of the Initial Test Program for the Sandia Pulsed Reactor III (SPR III)

Barry F. Estes, Jon A. Reuscher

Prepared by Sandia Laboratories, Albuquerque, New Mexico 87115 and Livermore, California 94550 for the United States Energy Research and Development Administration under Contract AT (29-1) 789

Printed August 1976

Sandia Laboratories

SF 2900 Q(7-73)

When printing a copy of any digitized SAND Report, you are required to update the markings to current standards.

Issued by Sandia Laboratories, operated for the United States Energy Research and Development Administration by Sandia Corporation.

NOTICE

This report was prepared as an account of work sponsored by the United States Government. Neither the United States nor the United States Energy Research and Development Administration, nor any of their employees, nor any of their contractors, subcontractors, or their employees, makes any warranty, express or implied, or assumes any legal liability or responsibility for the accuracy, completeness or usefulness of any information, apparatus, product or process disclosed, or represents that its use would not infringe privately owned rights.

SAND75-0657
Unlimited Release
Printed August 1976

RESULTS OF THE INITIAL TEST PROGRAM FOR THE SANDIA PULSED REACTOR III (SPR III)

Berry F. Estes
Jon A. Reuscher
Reactor Source Applications Division 5421
Sandia Laboratories
Albuquerque, NM 87115

ABSTRACT

This document presents a detailed discussion of the reactor including the mechanical and nuclear design characteristics. Also presented are the complete results of the Initial Approach to Critical and the Zero-and-Low Power testing programs. Reactivity worth measurements are given for such parameters as control element integral worth, Safety Block integral worth, and various materials (polyethylene, copper, lead, etc) as a function of position relative to the core. Subcritical reactivity measurements made during the approach to critical generally proved to be in reasonably good agreement with design values due to the good source-fuel-detector geometry possible with a reactor of this type. Subsequent dynamic measurements for reactivity worths are shown to be in good agreement with calculated results.

Printed in the United States of America

Available from
National Technical Information Service
U. S. Department of Commerce
5285 Port Royal Road
Springfield, Virginia 22161
Price: Printed Copy $7.75; Microfiche $2.25

ACKNOWLEDGMENTS

The authors thank the following personnel of the reactor operations group for their assistance and advice in evaluating the raw data and establishing the results as listed herein: R.S. Domingues, SPR Reactor Operator, V.E. James, SPR Reactor Operator, and J.A. Snyder, SPR Reactor Supervisor.

In addition, the following personnel made significant contributions to the fuel loading and raw data collection: J.C. Conant, F. Gonzalez, W.H. McAtee, Dr. J.S. Philbin, and Dr. D.J. Sasmor.

CONTENTS

		Page
CHAPTER I	Introduction and General Description of SPR III	11
	Introduction	11
	General Reactor Description	11
	Core Design Bases	12
	Calculated Nuclear Performance Characteristics	14
	Mechanical Design	15
	Fuel Plates	15
	Reactivity Control Systems	25
	Nuclear Design	25
	Core Size and Worth	25
	Control Element Reactivity Worth	25
	Burst Element Reactivity Worth	26
	Safety Block Worth	26
	Total Worth of Reactivity Control System	27
	Reactor Shroud and Thimble	28
	Summary of Design Specifications	28
CHAPTER II	Initial Critical Loading	31
	General	31
	Initial Critical Loading Experiment	33
	Summary of Results	37
CHAPTER III	Zero and Low Power Tests	54
	Control Element Calibration	54
	Burst Element Calibration	66
	Reactivity Effects of Various Materials	68
	Safety Block Reactivity Worth	85
	Variation of Burst Element Worth	86
CHAPTER IV	Conclusions	89
References		93
APPENDIX A -	Test Program Procedures	95
APPENDIX B -	Operational Drawings for SPR III Reactor	119

FIGURES

Figure		Page
1	The Sandia Pulsed Reactor III (SPR III): Cutaway View	12
2	Pulse Characteristics of the SPR III Compared with Those of the SPR II	15
3	Uranium-Molybdenum Alloy Phase Diagram	17
4	Time-Temperature Transformation Diagram of Uranium-Molybdenum Alloys	17
5	Yield and Ultimate Strength for As-Cast U-10 wt % Mo	18
6	Modulus of Elasticity for U-10 wt % Mo	18
7	Thermal Expansion for U-10 wt % Mo	19
8	Final Assembly of Upper Half of SPR III Core	20
9	SPR III Fuel Assembly	21
10	SPR III Fuel Plate A	22
11	SPR III Fuel Plate B	22
12	SPR III Fuel Plates C and D	23
13	Reactivity Worth of Core Separation With and Without Stainless Steel Support	26
14	Reactivity Worth of 2.54-cm-thick Copper Reflector	27
15	Typical 1/M Plots for Various Source-Fuel-Detector Geometries	34
16	Detector Locations in Reactor Building	35
17	Typical Instrument Equipment Arrangement	36
18	Approach to Critical-Subcritical Measurements, Channel 1	41
19	Approach to Critical-Subcritical Measurements, Channel 2	44
20	Approach to Critical-Subcritical Measurements, Channel 3	47
21	Approach to Critical-Subcritical Measurements, Channel 4	50
22	Assembled SPR III Core	53
23	Control Element 1, Differential Worth	60
24	Control Element 1, Differential Worth	60
25	Control Element 1, Differential Worth	61
26	Control Element 1 Calibration with Control Element 2 Fixed at 6608 Units, Mass Adjustment Using Control Element 3	62
27	Control Element 1, Integral Worth with Control Elements 2 and 3 Banked	63

FIGURES (cont)

Figure		Page
28	Control Element 2, Integral Worth with Control Elements 1 and 3 Banked	64
29	Control Element 3, Integral Worth with Control Elements 1 and 2 Banked	65
30	Burst Element Integral Worth Calibration	67
31	Reactivity of Boron Ball as a Function of Centerline Position in the Experiment Tube	77
32	Reactivity of a U-10 wt % Mo 278 gm Sample as a Function of Centerline Position in Experiment Tube with Shroud in Place	77
33	Relative Reactivity Worth of a SPR II Control Rod as a Function of Position in Experiment Tube	78
34	Change in Reactivity Worth of a Lead Sample as a Function of Centerline Position in Experiment Tube	78
35	Change in Reactivity Worth of a Steel Sample as a Function of Centerline Position in Experiment Tube	79
36	Reactivity Worth of Polyethylene Sample in Experiment Tube with Shroud on	79
37	Change in Reactivity Worth of a Copper Sample as a Function of Centerline Position in Experiment Tube	80
38	Change in Reactivity Worth of an Aluminum Sample as a Function of Centerline Position in Experiment Tube	80
39	Polyethylene Cylinder Worth as a Function of Thickness in the Experiment Tube	82
40	Integral Reactivity Worth, Safety Block and Upper Core Half Separation with no Shroud	86
41	Relative Change in Burst Element Worth as a Function of Centerline Position in Experiment Tube of a Polyethylene Sample	88
42	Integral and Differential and Control Element Calibration Curves	90
43	Reactivity Measurements in Central Cavity	91
44	Reactivity Effect of Nested Polyethylene Cylinders at Center of SPR III Glory Hole	92
45	Reactivity Effect of Nested Polyethylene Cylinders in SPR III Glory Hole	92

TABLES

Table		Page
I	SPR III Operational Design Characteristics	14
II	SPR III Fuel Component Masses	24
III	Summary of Design Specifications	28
IV	Approach to Critical-Subcritical Measurements, Reactor Out of Pit/Safety Block Up/Elements Down, Channel 1	39
V	Approach to Critical-Subcritical Measurements, Reactor Out of Pit/Safety Block Up/Elements Up, Channel 1	40
VI	Approach to Critical-Subcritical Measurements, Reactor Out of Pit/Safety Block Up/Elements Down, Channel 2	42
VII	Approach to Critical-Subcritical Measurements, Reactor Out of Pit/Safety Block Up/Elements Up, Channel 2	43
VIII	Approach to Critical-Subcritical Measurements, Reactor Out of Pit/Safety Block Up/Elements Down, Channel 3	45
IX	Approach to Critical-Subcritical Measurements, Reactor Out of Pit/Safety Block Up/Elements Up, Channel 3	46
X	Approach to Critical-Subcritical Measurements, Reactor Out of Pit/Safety Block Up/Elements Down, Channel 4	48
XI	Approach to Critical-Subcritical Measurements, Reactor Out of Pit/Safety Block Up/Elements Up, Channel 4	49
XII	SPR III Loading to Critical Sequence	52
XIII	Control Element 1 Calibration Using Control Element 2 Fixed and Control Element 3 for Mass Adjustment	55
XIV	Integral Worth--Control Element 1, Control Elements 2 and 3 Banked	56
XV	Integral Worth--Control Element 2, Control Elements 1 and 3 Banked	57
XVI	Integral Worth--Control Element 3, Control Elements 1 and 2 Banked	59
XVII	Burst Element Integral Worth Calibration	67
XVIII	Reactivity Worth Change of Boron Ball as a Function of Centerline Position in the Experiment Tube	69
XIX	Reactivity Worth Change of a U-10 wt % Mo Sample (278 g) as a Function of Centerline Position in the Experiment Tube	70
XX	Relative Reactivity Worth of SPR II Control Rod as a Function of Position on Centerline of Experiment Tube with Shroud in Place	71
XXI	Reactivity Worth Change of a Lead Sample as a Function of Centerline Position in the Experiment Tube	72

TABLES (cont)

Table		Page
XXII	Reactivity Worth Change of a Steel Sample as a Function of Centerline Position in the Experiment Tube	73
XXIII	Reactivity Worth Change of Polyethylene Sample as a Function of Position in the Experiment Tube	74
XXIV	Reactivity Worth Change of a Copper Sample as a Function of Centerline Position in the Experiment Tube	75
XXV	Reactivity Worth Change of an Aluminum Sample as a Function of Centerline Position in the Experiment Tube	76
XXVI	Polyethylene Cylinder Worth as a Function of Thickness Inside the Experiment Tube	81
XXVII	Effects of Polyehtylene Liners Inside the Experiment Tube as a Function of Position	83
XXVIII	Effect of Materials Placed Outside the Shroud on Burst Element Worth	84
XXIX	Safety Block Calibration Worth of Safety Block as a Function of Separation Distance Between Safety Block and Upper Core Half	85
XXX	Effect of Polyethylene Sample on Burst Element Worth as a Function of Centerline Position in Experiment Tube	87
XXXI	Comparison of Experiment and Design Values	89

RESULTS OF THE INITIAL TEST PROGRAM FOR THE SANDIA PULSED REACTOR III (SPR III)

CHAPTER I

INTRODUCTION AND GENERAL DESCRIPTION OF THE SPR III

Introduction

The Sandia Pulsed Reactor III (SPR III) is the third generation of fast pulse-type reactors designed, constructed, and operated by Sandia Laboratories.

This document summarizes the program for the initial loading to critical experiment and other zero- and low-power tests conducted with the reactor to establish basic nuclear properties and parameters. The experimental values obtained are compared to the design (calculated) values used in the Sandia Pulsed Reactor III (SPR III) Final Safety Analysis Report.[1]

The predecessor reactor, SPR II, has been in operation since 1967 and is used primarily for fuel-material studies and evaluation of radiation effects on materials. The SPR II in-core (central) experiment volume is limited in dimension and geometry, and the performance characteristics of the reactor are limited because of physical restrictions imposed by fuel integrity, control element drive systems, and core support structure. The SPR III core is designed to reduce or eliminate these problems.

General Reactor Description

The (original) core design of the SPR III provided for 18 cylindrical stacked fuel rings divided into two integral parts at the horizontal midplane. The operational core configuration consists of 16 fuel rings (see Chapter II). The upper nine plates are held stationary and the lower nine plates are mounted on a movable support which allows movement over a range of 8.89 cm. Each assembly of nine plates is mechanically fastened by four 2.54-cm-diameter steel bolts which clamp the plates between two nonfissile material support rings. Fuel plates are fabricated of 93 percent enriched U-235 alloyed with 10 weight percent molybdenum (U-10 wt % Mo). This is the same fuel material as used in the SPR II core fuel plates. A cutaway view of the SPR III core and some support structures is shown in Figure 1.

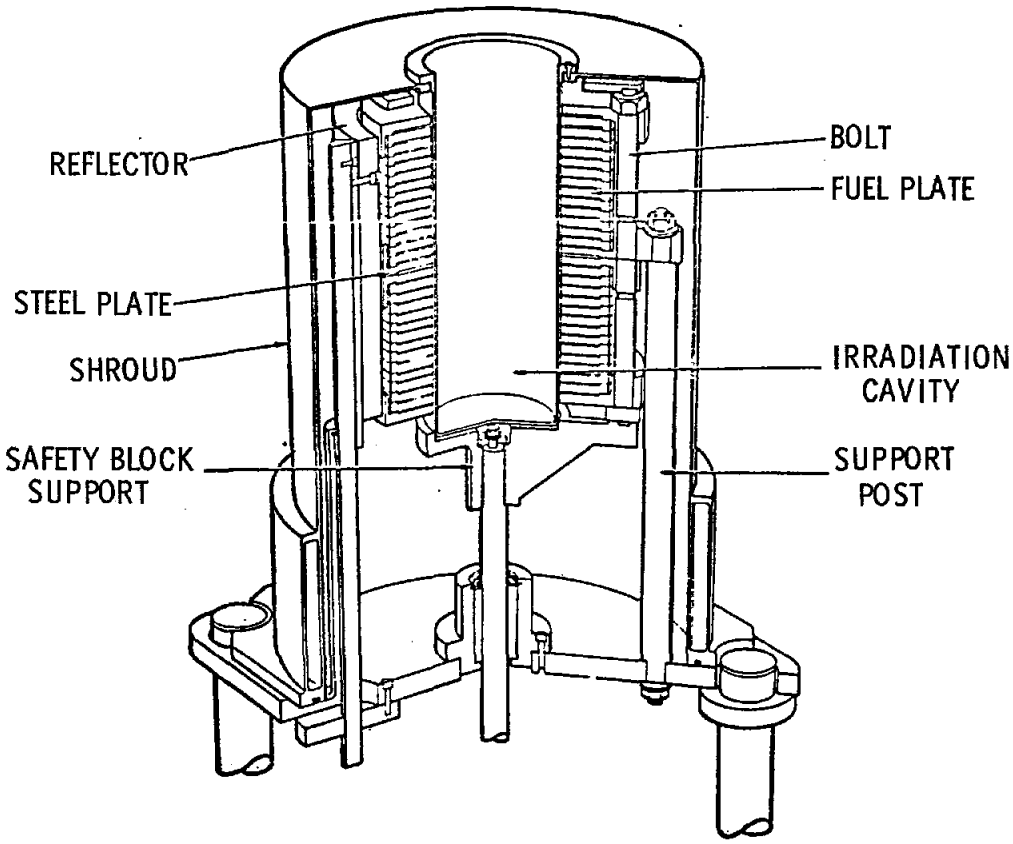

Figure 1. The Sandia Pulsed Reactor III (SPR III): Cutaway View

Below the core is an aluminum support structure housing various control-element drive mechanisms, burst-element drive mechanism, the safety-block drive mechanism, and position monitors. This structure is mounted on a hydraulic elevator that can be lowered into a concrete pit to provide shielding of personnel when the reactor is not in operation.

Core Design Bases

This section primarily discusses the criteria for the core nuclear design and the reactivity control system. Other features and respective criteria are discussed briefly but only to the extent that these systems relate to the above items. The reactor design bases are summarized as follows:

1. Large fluence ($>10^{14}$ nvt) of high energy neutrons, that is, greater than 10 keV.
2. High yield pulse with minimal duration.
3. Modified pulse techniques (delayed-tail).
4. Steady-state power capabilities.
5. Large central experiment cavity.
6. Negative temperature coefficient of reactivity.
7. High degree of inherent safety.

The extent to which the SPR III design can satisfy these bases is predicated on the following parameters:

1. State-of-the-art fuel alloy materials.
2. Fuel material time-at-temperature.
3. Fuel material expansion shutdown coefficient.
4. State-of-the-art core configuration.
5. Experiment capabilities.

The following summary of these items is discussed by Reuscher in Reference 1.

State-of-the-Art Fuel Alloy System -- On the basis of fuel alloy studies and the experience with the SPR II, the fuel used in the SPR III is uranium, 93 percent enriched in U-235 and alloyed with U-10 wt % Mo. The major advantages of this material for fast-pulse reactor application are as follows:

1. Its static yield strength is greater than that of most uranium alloys (9.3×10^8 Pa at 20°C to 2.3×10^8 Pa at 700°C).
2. It is gamma-phase stabilized at room temperature.
3. It is not subject to ratcheting during thermal cycling.
4. It exhibits an isotropic thermal expansion coefficient.
5. It is not subject to gross segregation of alloy constituents.

The microsegregation of molybdenum which occurs during casting of the alloy is eliminated by a homogenization treatment. In addition, the susceptibility of U-10 wt % Mo to stress corrosion cracking is countered by aluminum ion plating of the fuel and operation in a nitrogen gas environment.

Fuel Time-at-Temperature Limit -- The basic limit for all types of SPR III operations can be expressed as a temperature and a time-at-temperature limit, which is imposed by the need to retain the gamma-phase structure of U-10 wt % Mo. The gamma phase is subject to total transformation to the alpha phase with a minimum isothermal transformation time of about 9 hours at 450°C. Furthermore, the maximum operating fuel temperature is always kept significantly below the melt temperature of U-10 wt % Mo (1130°C).

Fuel Expansion Shutdown Coefficient -- The inherent pulse-termination protection for the SPR III is the fuel expansion shutdown which is determined by a negative temperature coefficient of reactivity. Measurements on the SPR II[2] have shown that during pulse operation the shutdown coefficient is about -\$0.0005/°C at the pulse peak over a temperature range from 50° to 400°C;

during steady-state operation the shutdown coefficient is -\$0.003/^{o}C. The SPR III, with its similarity in configuration, should exhibit similar values for these shutdown coefficients.

State-of-the-Art Core Configuration Design -- The design experience gained during more than 5000 operations with the SPR II was utilized in the design of the SPR III. The SPR II design features that caused operational difficulties have been either eliminated or improved in the SPR III.

The absence of bolt holes and control rod holes in the SPR III fuel plates eliminates stress concentrations. The plates are held together with four external bolts, and external reflectors provide reactor control. The plates are aluminum-ion-plated, since this plating has proved useful in preventing fuel oxidation and in reducing alpha contamination of the reactor building. Limited contact between adjacent plates also is employed to reduce axial stress-wave propagation in the fuel assembly. Improvements in fuel-fabrication techniques, resulting from experience with the SPR II, have been incorporated into the fabrication of the SPR III fuel plates.

Experiment Capabilities -- Experiment capabilities of the reactor must accommodate two distinct types of programs. First, those experiments conducted either by or on the reactor to investigate properties and parameters of the reactor. Second, and the more important of the two, are those features of the reactor which allow experiments to be performed with the reactor wherein the reactor is utilized, for example, as a high energy neutron source. In this regard, the main performance criterion is to provide in the central irradiation cavity, which is 17.78 cm in diameter by 40.64 cm in height, a neutron fluence of 6×10^{14} nvt (> 10 keV) per pulse with a pulse width of about 60 μs.

Calculated Nuclear Performance Characteristics

This section summarizes (Table I) the nuclear performance characteristics as calculated to satisfy the foregoing criteria.

TABLE I

SPR III Operational Design Characteristics

Maximum ΔT	450°C
Pulse width at 1/2 max power	54μs
Peak-to-average ΔT	1.6
Neutron fluence at center of cavity	6×10^{14} nvt
Gamma dose	1.4×10^{5} rads (H_2O)
Peak Neutron flux	1.1×10^{19} nt/cm^2-sec
Peak Gamma dose rate	2.5×10^{9} rads (H_2O)/sec

Pulse width characteristics of the SPR III as a function of maximum fuel temperature rise are shown in Figure 2. Also shown on this figure for comparison purposes is the plot for SPR II of the same parameters.

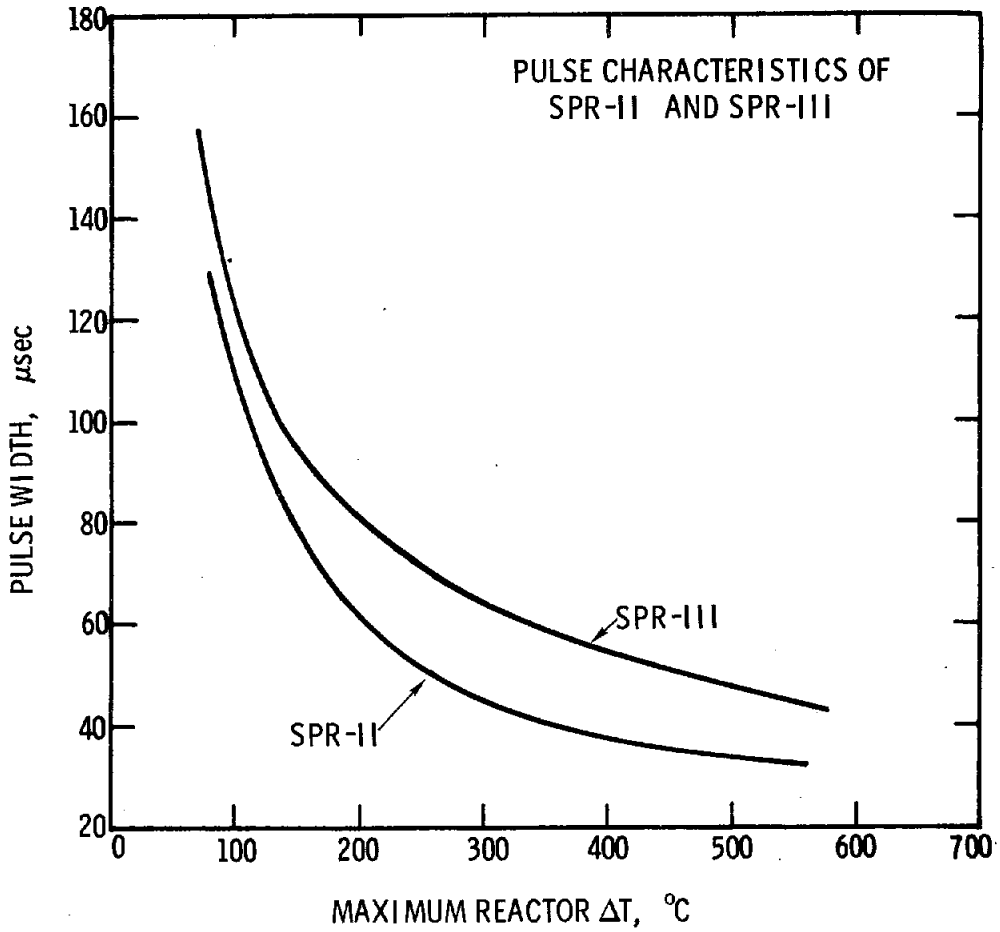

Figure 2. Pulse Characteristics of the SPR III Compared with Those of the SPR II

Mechanical Design

This section discusses the design of the fuel plates, characteristics of the fuel material important to the mechanical integrity and nuclear behavior, and the reactivity control systems.

Fuel Plates

Design Bases -- The main design requirement is to assure that the fuel plates will retain their mechanical integrity throughout the expected range of operating (design) conditions. A second, and equally as important, requirement is for the fuel material to be of such composition and geometry to assure that a reactivity feedback coefficient exists which will act in a self-limiting

manner to nuclear output. These design requirements are satisfied by the following characteristics and properties of the fuel plates:

1. A prompt negative temperature coefficient, sufficient to inherently terminate super-prompt critical pulses.
2. Metallurgical properties of the fuel that would insure integrity of the material during high temperatures and especially during fast temperature transients experienced in pulsing; in particular, (a) high static and dynamic yield strengths, (b) ability to withstand thermal cycling, and (c) isotropic linear expansion.
3. A core configuration designed to minimize stresses and thermomechanical shock during super-prompt critical pulses.
4. A core configuration designed to be fail-safe for "off-design" operational transients.

Description of Fuel Plates -- The fuel material is uranium enriched to 93 percent with U-235 and alloyed to U-10 wt % Mo. This fuel material is selected because:

1. Its yield strength is considerably greater than that of most uranium alloys.
2. It is gamma phase stabilized at room temperature.
3. It is not subject to dimensional changes during thermal cycling.
4. It exhibits an isotropic coefficient of linear expansion.
5. It is not subject to gross segregation.
6. It is within the scope of an existing fuel fabrication technology.

The phase diagram for uranium-molybdenum alloys is shown in Figure 3. Pure uranium exists in three forms: alpha, beta, and gamma, each with a unique lattice structure and stability regime. Alpha phase uranium exists at temperatures up to about 665°C[3] in orthorhombic crystalline form. Beta phase uranium exists in the temperature range of 665° to 770°C in tetragonal crystalline form. Gamma phase uranium exists in the temperature range of 770° to 1130°C (melting point) in body-centered cubic crystalline form. Alloying uranium with molybdenum, using proper heat treatment technique, maintains the gamma phase throughout the entire temperature range, thereby eliminating the anisotropic expansion characteristic of the alpha phase. Therefore, under thermal cycling, the U-10 wt % Mo alloy is gamma stabilized and has the dimensional stability characteristic of the body-centered cubic crystal. Further, U-10 wt % Mo has a higher strength and a lower modulus of elasticity than unalloyed uranium.[4, 5] A time-temperature-transformation (TTT) curve for uranium-molybdenum alloys is shown in Figure 4.[6] Minimum time to start of phase transformation is about 9 hours at a temperature of 450°C. The transformation rate is sluggish, requiring about 200 hours at 470° for completion.[7] Studies[8, 9]

have shown that transformation may indeed be annealed out by radiation, that is, alpha transformed material reverts to the gamma phase. Other properties of the U-10 wt % Mo alloy important to the design are shown in Figures 5, 6, and 7. The one undesirable characteristic of U-10 wt % Mo is the tendency for stress corrosion, thus the decrease in tensile strength. Stress corrosion is essentially eliminated by aluminum-ion-plating the fuel plates and using a nitrogen gas to produce an inert atmosphere around the reactor, particularly if high fuel material temperature is expected.

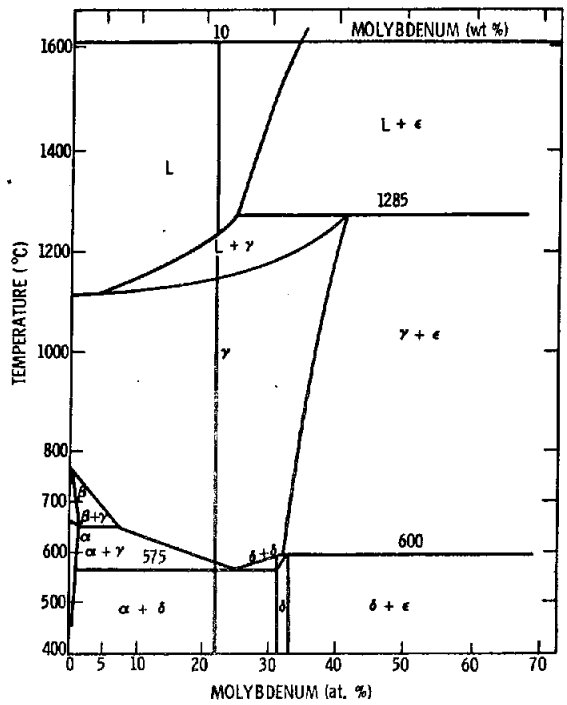

Figure 3. Uranium-Molybdenum Alloy Phase Diagram

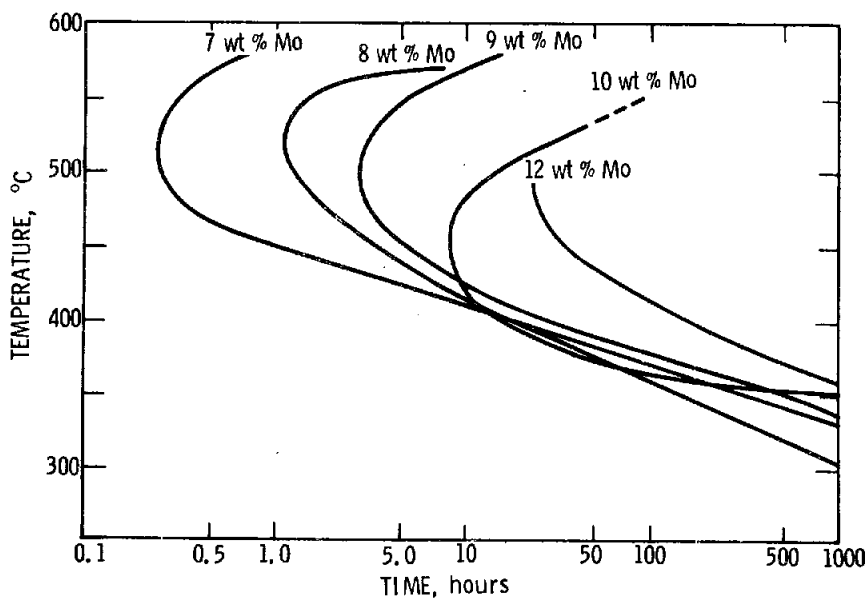

Figure 4. Time-Temperature Transformation Diagram of Uranium-Molybdenum Alloys

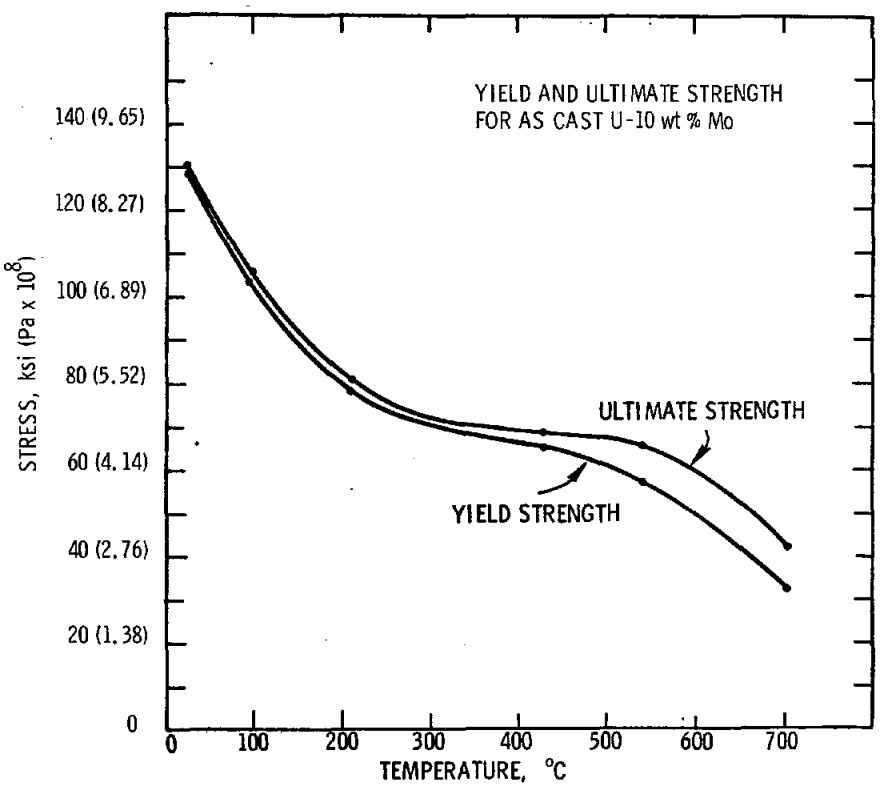

Figure 5. Yield and Ultimate Strength for As-Cast U-10 wt % Mo

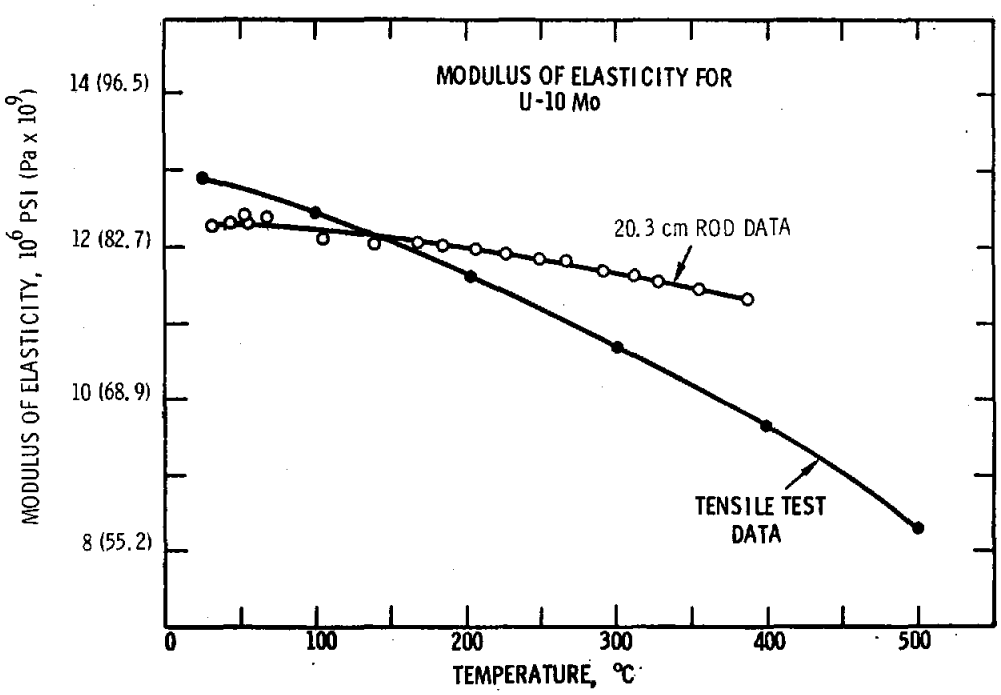

Figure 6. Modulus of Elasticity for U-10 wt % Mo

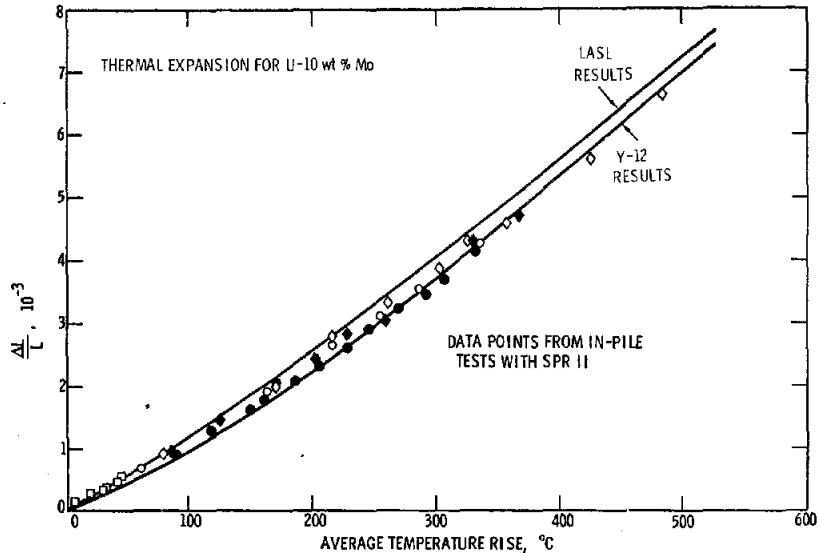

Figure 7. Thermal Expansion for U-10 wt % Mo

Fuel Assembly -- The SPR III fuel plates are assembled to form a right circular cylinder. The total core consists of 18 plates (16 fuel rings and 2 steel rings, see Figure 8) and the core is composed of two halves each containing nine plates. Overall dimensions of the assembled core are 40.60 cm high by 29.7 cm OD, with an inner irradiation cavity 17.78 cm diameter (see Figure 9). Steel bolts and support rings are used to mechanically hold the nine plates together. The upper nine rings are bolted with four high strength steel bolts and are held stationary by four steel posts fixed to the lower support ring. The lower nine rings are similarly bolted by support rings; however, the lower support ring is attached to a support flange which is part of a drive mechanism for raising and lowering the bottom core half. This portion is referred to as the "Safety Block."

A detailed cross section of the upper half of the core is shown in Figure 8. Most of the plates are identical in size and shape except for the plates near the parting plane of the core. At the center of the core is the A plate, which has a smaller outside radius than the other fuel plates. This plate is inserted into the support ring and has a circular projection at its inside radius which mates with a recess on the adjacent B plate. The remaining plates, C and D, have projections and recesses at the outside radius of the core to insure that the reactor configuration is repeatable from pulse to pulse.

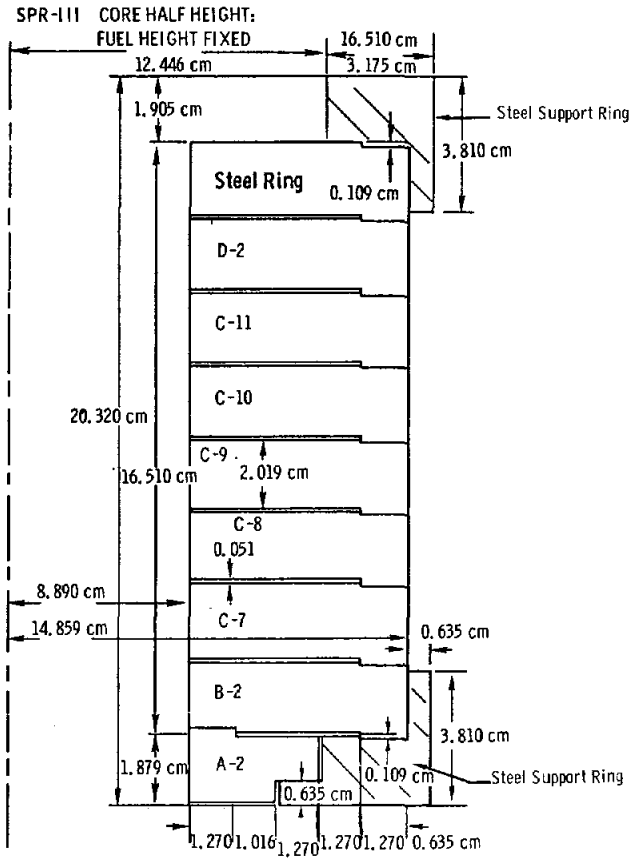

Figure 8. Final Assembly of Upper Half of SPR III Core

The concept of axial segmentation of the fuel assembly to reduce stresswave propagation and the induced bolt stresses has been successfully employed with the SPR II. This concept is used for the SPR III. Adjacent fuel plates are in contact only at the outer core radius (except for the central fuel plates). Circular projections and recesses, 1.27 cm wide, maintain a 0.0508-cm spacing over 75 percent of the horizontal plate area. This limited contact reduces bolt stresses by a factor of two over the bolt stress for a core with full contact. Calculations indicate that a pulse with a maximum temperature rise of 500°C and a pulse width of 50 μs will produce a peak bolt stress of 5.7×10^8 Pa for 2.54-cm-diameter bolts. The bolt material chosen has a yield strength of at least 9.1×10^8 Pa, to insure elastic behavior up to a pulse with a maximum temperature rise of 650°C.

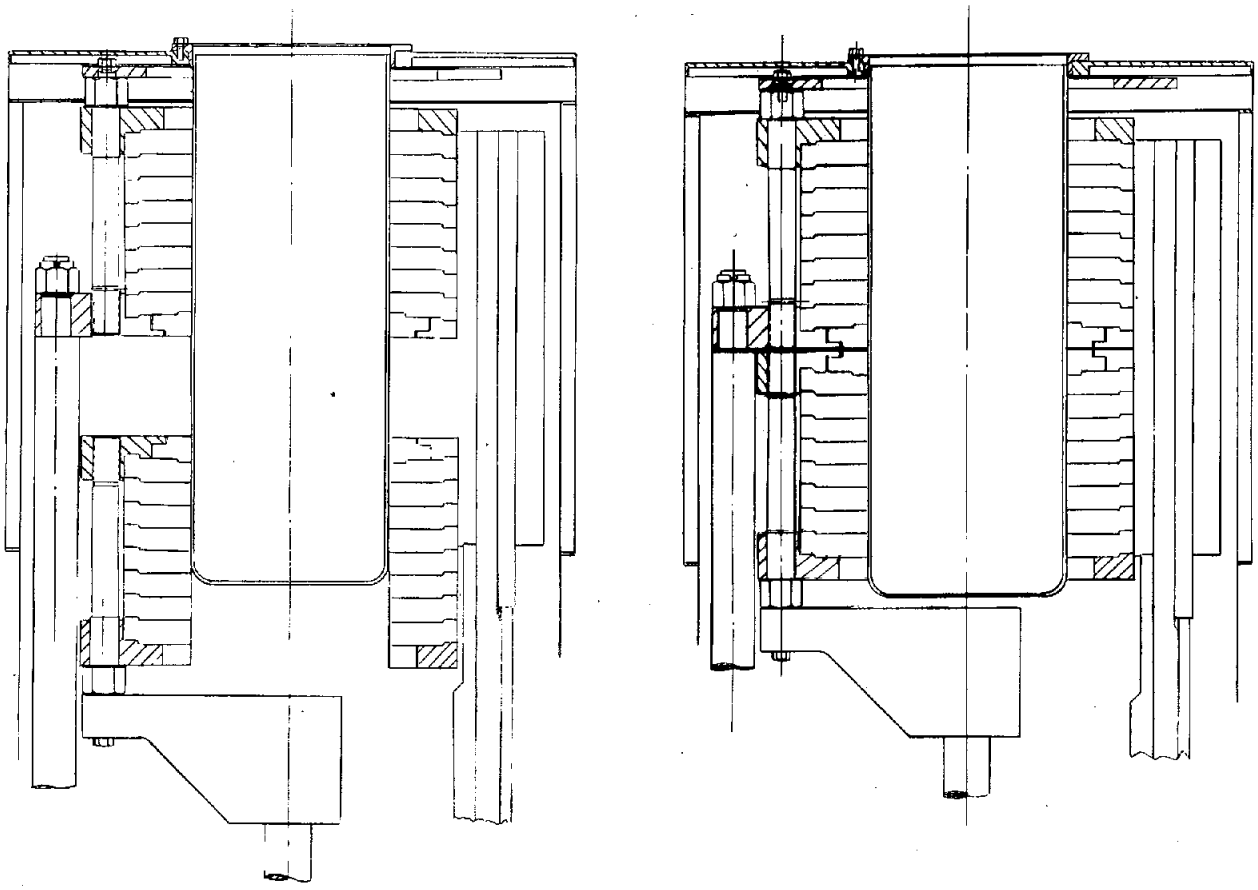

Figure 9. SPR III Fuel Assembly

The stresses induced in the fuel plates have been calculated for the temperature-rise conditions in the SPR III during pulse operation. The stress conditions are much less severe than those in the SPR II. The static yield strength at temperature of U-10 wt % Mo fuel (4.0×10^8 Pa) is reached for a pulse with a maximum temperature rise of 565°C and a width of 48 μs. This pulse yield is considerably above the pulse of 450°C necessary to produce the design fluence of 6×10^{14} nvt. Since the SPR III fuel plates are free of the bolt and control-rod holes that cause stress risers, cracking of the plates, such as was experienced with the SPR II, is reduced in severity if not eliminated.

The three different fuel plates are illustrated in the accompanying drawings: Figure 10 shows the smaller-radius A plate, which is inserted into the steel support plate; Figure 11 shows the adjacent B plate; and Figure 12 shows the C and D plates, which are identical in size. All the plates have circular projections and grooves which maintain the 0.0508-cm spacing between adjacent plates. The projections are interrupted at 45-degree increments over a 1.27-cm width to provide access to the gap between plates for experimental purposes and to allow a passage for the cooling gas.

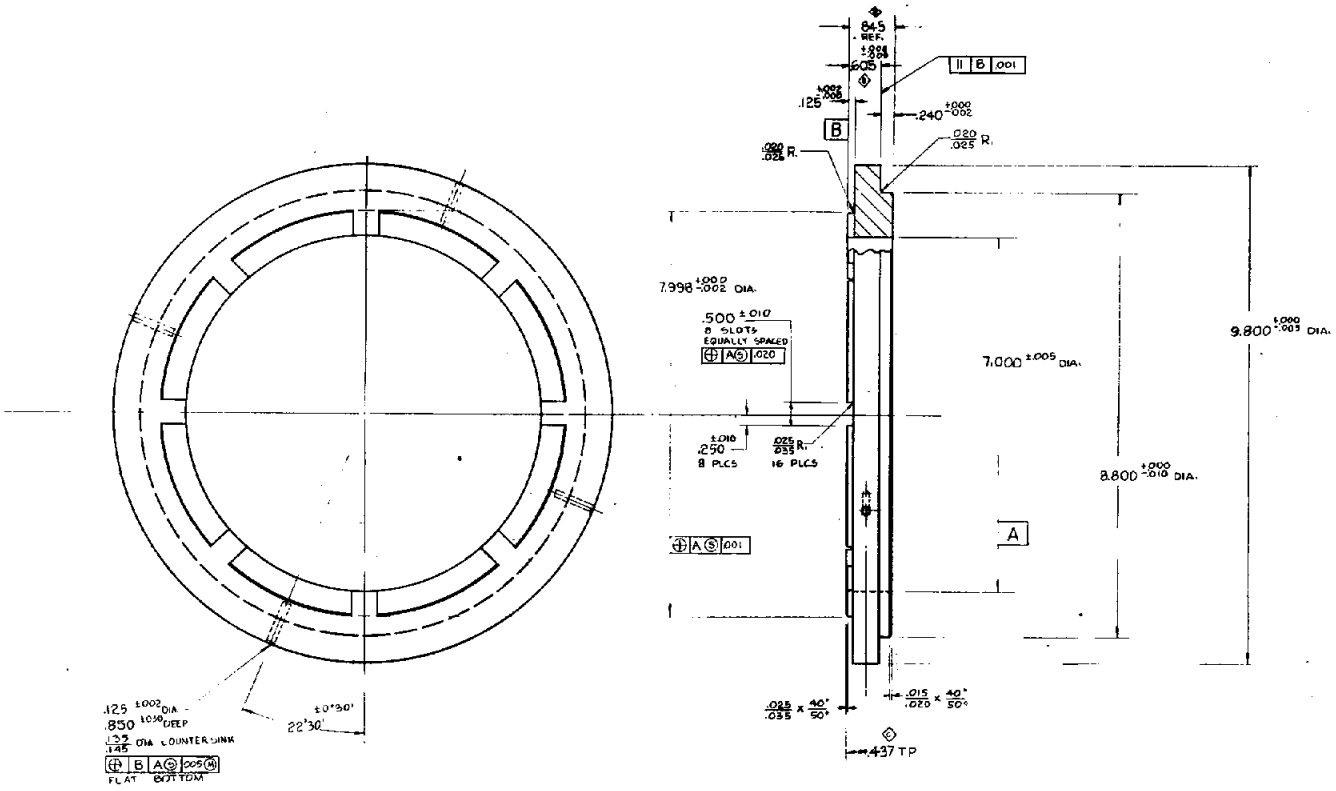

Figure 10. SPR III Fuel Plate A

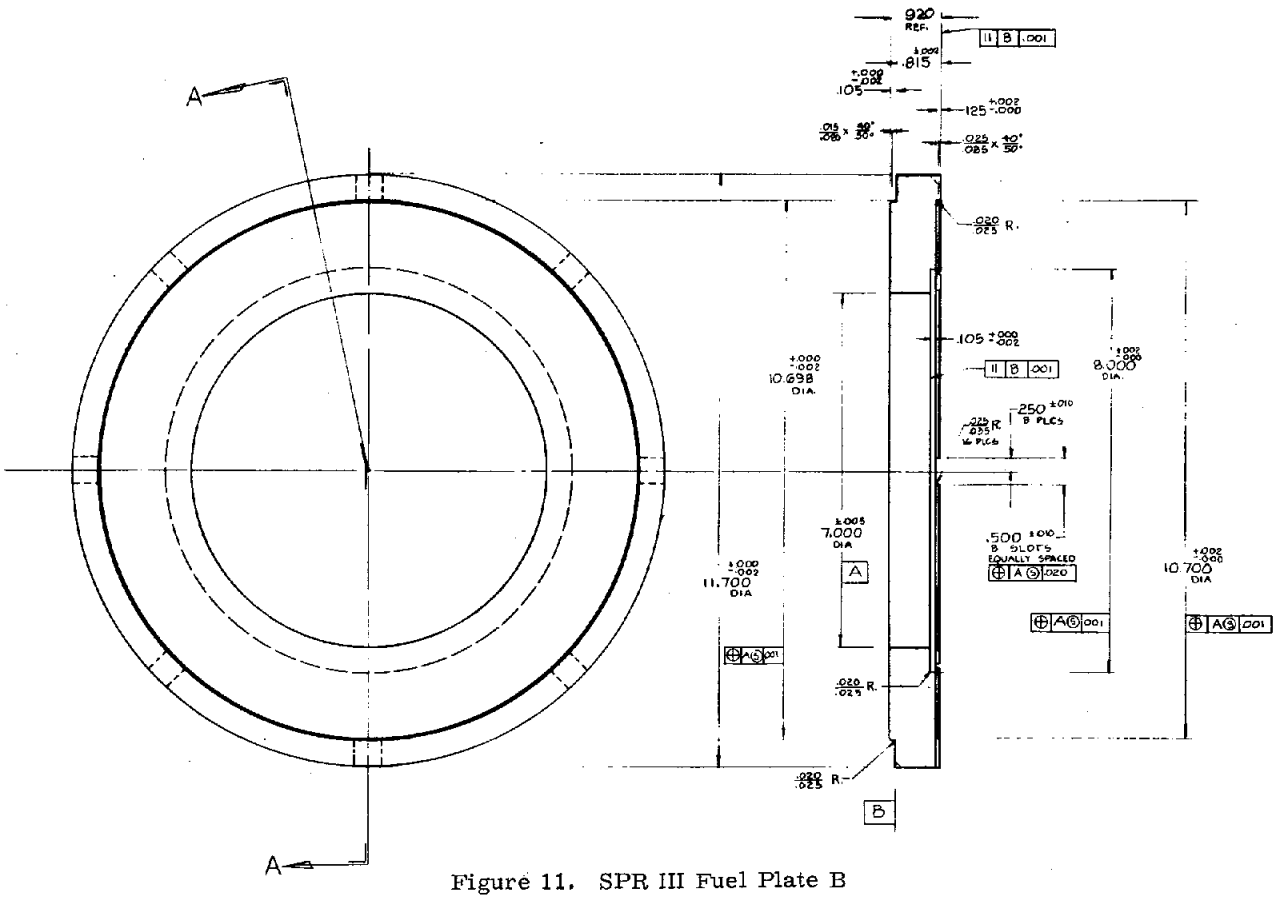

Figure 11. SPR III Fuel Plate B

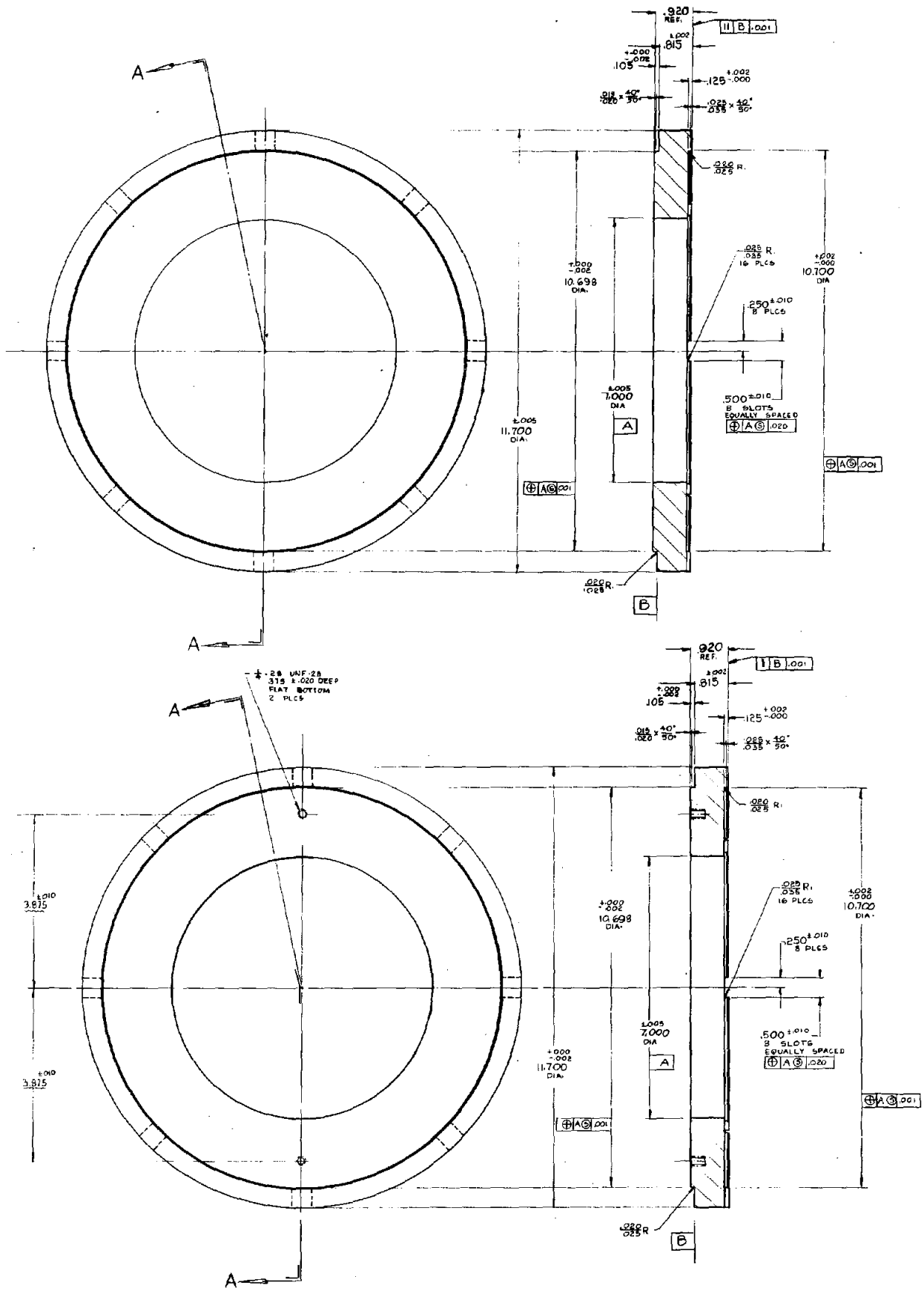

Figure 12. SPR III Fuel Plates C and D

The temperature of the core is measured with four thermocouples, two near the center of the core and one each at the top and the bottom of the fuel assembly. Each half of the core contains two chromel-alumel thermocouples. The temperature of the A plate in both core halves is monitored by a thermocouple inserted through the steel support plate and into a 0.3175-cm-diameter hole in the plate; the thermocouple is fixed in position by a threaded connection in the steel plate. At the top and the bottom of the core, a chromel-alumel thermocouple is inserted vertically about 1.3 cm into the end fuel plates and is held in place by a threaded connection in the plate.

The bolts for the core are machined from A-286 steel, which has been used successfully for the nonfissile parts in the SPR II core. The bolts have a yield strength of at least 1.1×10^9 Pa (160 Ksi). The support ring at the center of the core is constructed of type 304 steel and is designed to elastically absorb the 0.102-cm radial expansion of the B plate during a 500°C pulse. The A and B plates are keyed together at the inside radius, and the A plate expands freely into a 0.127-cm gap between the outside radius and the inside of the steel support ring. As shown in Figure 10, the A plate is supported by a circular lip on the steel support ring. The A and B plates are also machined to provide a limited contact area, with a gap of 0.0508 cm, between the two core halves when the safety block is fully raised. The two steel support rings at the center of the core are machined to contact only at the bolt locations.

The approximate masses of the four different SPR III fuel plates are listed in Table II.

TABLE II

SPR III Fuel Component Masses

Plate	U-10 wt % Mo Mass (kg)	U Mass (kg)
A	6.8	6.1
B	15.0	13.5
C	15.3	13.8
D	15.4	13.9

The design core consisted of two A, two B, twelve C, and two D plates, for a total mass of 258 kg of U-10 wt % Mo or 232 kg of uranium; however, the operational core will have only ten C plates for a total mass of about 227 kg of U-10 wt % Mo.

Accurate reproducibility of the safety-block seating (a must in fast pulse reactor systems) is achieved by (1) operation below the bolt elastic limit, (2) a four-point contact of the safety block and stationary core half, (3) over-driving of the safety block after contact, (4) an anti-rotation device on the safety-block mechanism assuring azimuthal alignment, and (5) an accurate radial alignment through a bearing mounted in the top plate of the reactor stand.

Safety Block -- The safety block consists of the lower nine plates (eight fuel and one steel ring) bolted together and mounted on a movable flange, and as such, is the only movable fuel component in the SPR III core. It also constitutes the primary reactor shutdown device that is employed to mechanically remove reactivity from the system. The flange on which the safety block is mounted is fixed to the drive shaft, which is part of an electromechanical drive system that drives the safety block through its travel distance of 8.89 cm.

Reactivity Control Systems

Reactivity control systems for the SPR III are grouped into three categories: safety block, control elements, and burst element. A unique feature of this reactor is that reactivity control for operation does not utilize the standard techniques of either poison rods or fuel rods, but utilizes reflector elements.

Design Bases -- The principal criteria for the mechanical design of the reactivity control systems is to provide a system that is rugged, dependable , has a high degree of reliability and repeatability, and can respond rapidly to input signals.

Nuclear Design

Details of the nuclear design parameters for SPR III have been defined by Schmidt[10] and only the highlights of the design values as pertinent to the startup, and zero and low power testing program are summarized below.

Core Size and Worth

Criticality calculations[10] performed based on a core model representative of the reactor predicted a total fuel inventory of 263 kg and that the assembled bare core would be approximately $8.00 subcritical.

Control Element Reactivity Worth

Reactivity worth of the control elements are calculated by Schmidt,[10] using the simplified R-Z and R-θ core models. Two blade thicknesses, 2.54 cm and 3.81 cm, are evaluated for copper reflector material. Based on a 36.8-cm stroke, reactivity worth is calculated to be about $2.90 for the 2.54-cm reflector and about $3.60 for the 3.81-cm reflector, based on a 0.63-cm spacing between reflector and core.

Burst Element Reactivity Worth

Similar calculations performed for the aluminum burst element result in a predicted worth of $1.26 for the 3.81-cm burst element with a 21.59-cm stroke.

Safety Block Worth

The calculated reactivity worth[11] of the safety block is shown in Figure 13 as a function of core separation distance. Maximum negative reactivity worth of the safety block at full separation distance (8.89 cm) is calculated to be $15.82. At a separation distance of 2.54 cm, the worth is estimated to be about -$7.00 based on an average 1.27-cm-thick stainless steel support condition. (NOTE: Actual stainless steel thickness varies from 1.78 cm at the thickest portion to 0.63 cm at the thinner portions.)

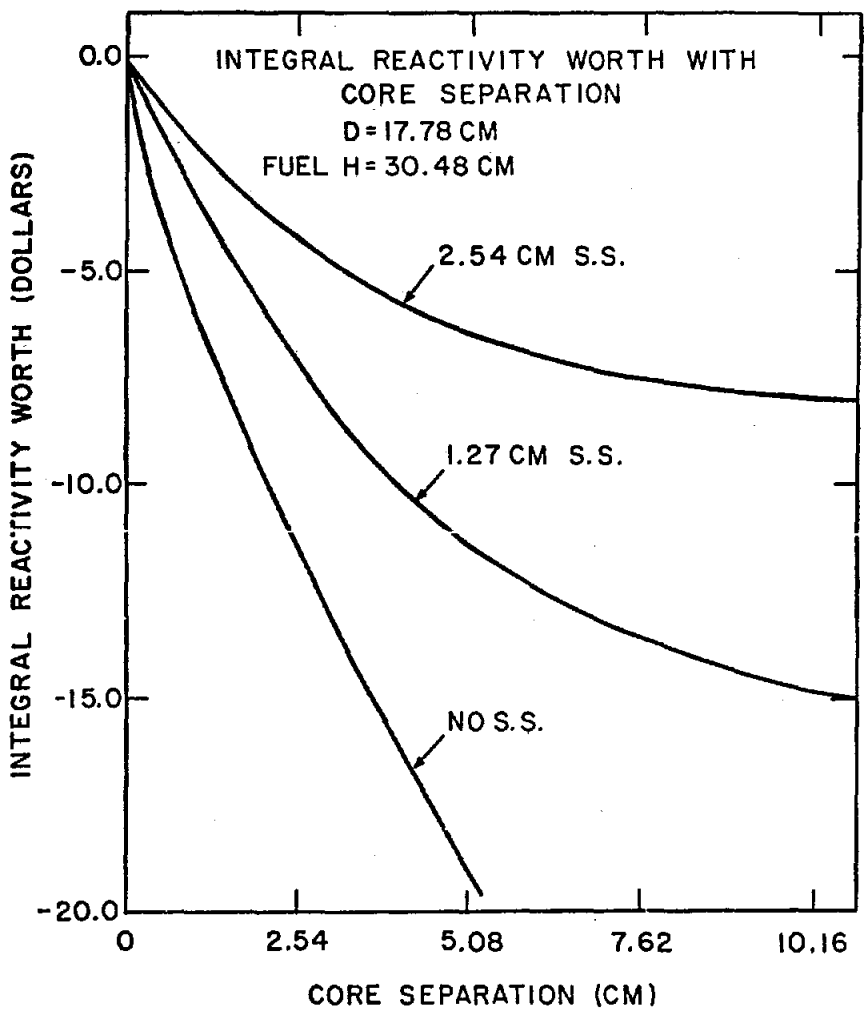

Figure 13. Reactivity Worth of Core Separation With and Without Stainless Steel Support

Total Worth of Reactivity Control System

The reactivity control system is considered to be the three copper control elements and the aluminum burst element. Combined calculated worth of the three control elements ranges from \$8.70 to \$11.40 for thicknesses of 2.54 cm to 3.81 cm, respectively. Worth of the burst element ranges from \$0.94 to \$1.38, with \$1.26 (3.81 cm thickness) the most likely value. Hence, total reactivity worth in the control system is \$9.96 to \$12.66, with the most likely value to be \$9.96, which is the calculated value corresponding to the geometries actually selected for control element and burst element sizes. Excess reactivity for the cold, clean critical core is calculated by Schmidt[10] to be about \$6.00 with the shroud and thimble in place.

Calculated integral reactivity worth and differential worth for the 2.54 cm-thick copper reflector is shown in Figure 14.

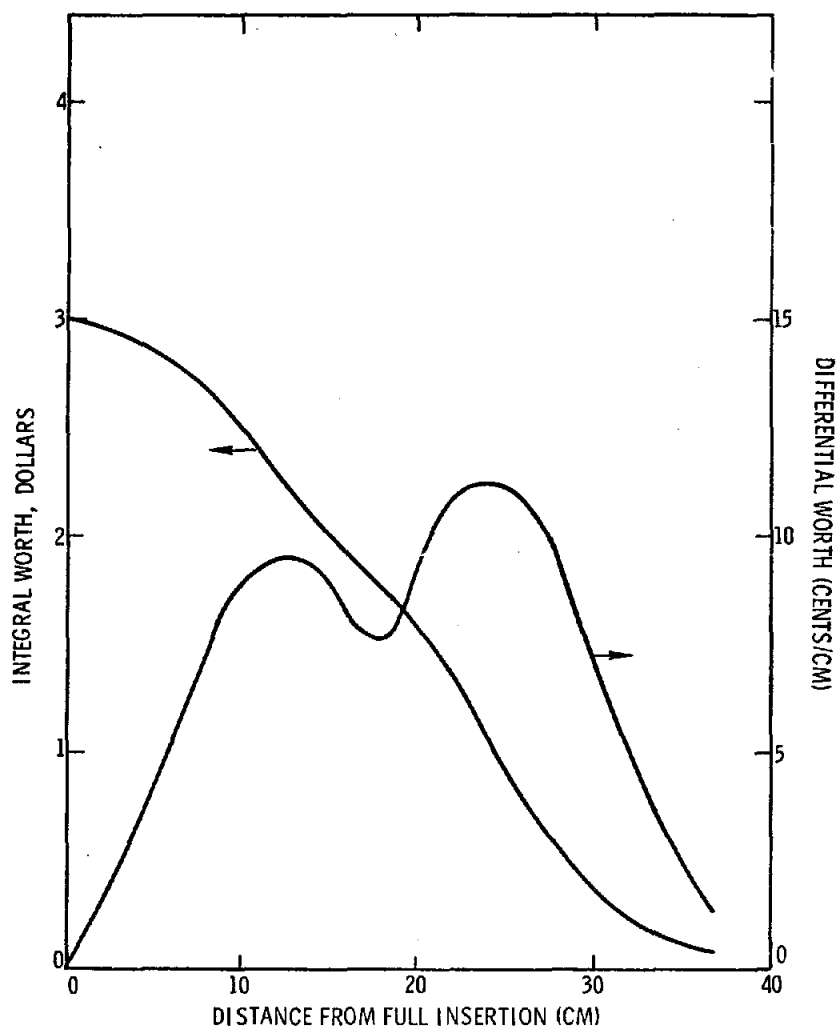

Figure 14. Reactivity Worth of 2.54-cm-thick Copper Reflector

Due to the removal of the outermost fuel ring, it is of interest to note here that the estimated loss of reactivity to the system when replacing these fuel rings with stainless steel rings is about $1.19 per plate. Actual observed data, subcritical measurements, showed the net loss of reactivity to be about $2.55 (total); and rod worth reactivity measurements indicate a net change to be $1.55.

Reactor Shroud and Thimble

The reactor shroud and thimble are discussed separately because of their importance to the nuclear characteristics of the reactor. Primarily, these two items are placed on the reactor to decouple the core neutronically from the effects of extracore neutrons, that is, neutrons that could be returned to the core due to scatter interactions. A neutron-absorber material, boron, is used in the fabrication of the shroud and thimble. The shroud is covered with a 0.635-cm-thick layer of a boron-Silastic ® mixture and because of the 1/v capture cross section of boron, neutrons returned to the reactor are, for all practical purposes, lost to the system and do not affect pulse characteristics. The thimble also contains a layer of B-10 which acts in a similar way to decouple experiments in the central cavity.

Reactivity Effects of Shroud and Thimble -- Calculated reactivity effects of the shroud and thimble made by Schmidt[10] show that the combined shroud/thimble worth is between $0.68 and $0.97 for the design (18 fuel plates) core. Actual measurements performed with delayed critical control element configurations to determine reactivity worth show the shroud to be worth a positive $0.88, the thimble to be worth a positive $0.14, and combined worth to be $1.02 for the operational (16 fuel plates) core.

Summary of Design Specifications

This section summarizes (Table III) the paramount design parameters discussed in the foregoing sections.

TABLE III

Summary of Design Specifications

I. Core Geometry

No. of fuel plates upper half	9
No. of fuel plates lower half (safety block)	9
Overall dimensions	29.72 cm OD x 40.64 cm high
Inner cavity dimensions	17.78 cm OD x 40.64 cm high
Experiment tube (inner shroud)	17.62 cm OD x 45.56 cm high

II. Fuel Plates

Uranium 10 wt % Mo 93 percent enriched in U-235 Al clad. Fuel plate masses:

Design		Operational	
A plate (2)	13.6 kg	A plate (2)	13.6 kg
B plate (2)	30.0 kg	B plate (2)	30.0 kg
C plate (12)	183.6 kg	C plate (10)	152.9 kg
D plate (2)	30.8 kg	D plate (2)	30.8 kg
Total	259.0 kg	Total	227.3 kg

III. Control Elements and Burst Element-Mechanical

Number of Control Elements	3
Material	Ni clad copper
Control element mass	25.86 kg (final 23.13 kg)
Number of Burst Elements	1
Material	Anodized AL
Burst element mass	11.79 kg

IV. Control Element Drive

Type	Electro-mechanical
Total travel	36.83 cm
Insertion rate (max)	0.333 cm/sec
Reactivity rate (max)	4 ¢/sec

V. Burst Element Drive

Type	Pneumatic/hydraulic
Total travel	21.59 cm
Insertion rate (max)	~250 cm/sec
Reactivity rate (max)	$30/sec

VI. Safety Block Drive

Type		Electro-mechanical
Total travel		8.89 cm
Insertion rate	Fast 5.6 sec	1.59 cm/sec
	slow 112.0 sec	0.08 cm/sec

VII. Core Nuclear

Safety block worth @ 8.89 cm	~ - 16 $
Safety block reactivity rate	5 $/sec
Excess reactivity	~ 4 $
Total control element bank	8.70 - 11.40 $
Control element (integral - 2.54 cm thick)	~ 2.90 $
Control element (differential-max)	~ 0.12 $/cm
Control element rate	0.04 $/sec
Burst element- (integral dynamic - 3.81 cm thick)	~ 1.26 $
Burst element reactivity rate	30 $/sec
Temperature coefficient of reactivity (steady state)	- 0.300 cents/°C

VIII. Operational Characteristics - Design Pulse

Maximum ΔT	$450^{\circ}C$
Pulse width at 1/2 max power	54 μs
Peak-to-average ΔT	1.6
Neutron fluence - center of cavity (> 10 keV)	6×10^{14} nvt
Gamma dose (H_2O)	1.4×10^{5} rads
Peak Gamma dose rate (H_2O)	2.5×10^{9} rads/sec
Peak Neutron flux (> 10 keV)	1.1×10^{19} nv

CHAPTER II

INITIAL CRITICAL LOADING

General

The purpose of performing an "initial critical loading," or "approach to critical" as preferred by some experimenters, is to determine the minimum critical mass required for an effective multiplication (k_{eff}) equal to 1 for a given geometry. The geometry of interest for the SPR III is that geometry referred to as the "free field" configuration. In this configuration, the safety block is in the full-up position, no extraneous materials are present to perturb the system, and the control elements are utilized to establish a delayed critical state. Two delayed critical states are determined: one with the burst element fully inserted and the second with the burst element fully withdrawn. Determination of the "free field" criticality state is very important for SPR III because this data provides the fundamental reference line from which all future reactivity evaluations can be made, should perturbations induce reactivity changes that are difficult to interpret on a bases relative to some other perturbed state. Further, the "free field" measurement provides a basic tool for future long term reactivity evaluation of the reactor.

Loading the SPR III core to critical is atypical in the sense that the system does not contain provisions for neutron absorbing (poison) materials either in or out of the core that can be placed beforehand in the core to assure subcriticality, and then be removed for the measurement. Typical of this type approach are the "rods in" and "rods out" measurements. In lieu of the poison control technique, mechanical devices are utilized during the assembly of the SPR III core fuel plates to assure that fuel masses cannot be brought together inadvertently, but rather can be assembled together as and when desired.

All nonnuclear test programs were completed prior to start of the loading to critical, and all mechanical, pneumatic, hydraulic, and electrical systems operated as designed.

Technique for Experimental Determination of Core Size

The basic technique used is the reciprocal multiplication method[12] which consists of plotting 1/M as a function of fuel material mass and extrapolating the plot of 1/M to zerc after each loading increment. The parameter M is the multiplied count of a neutron source in proximity of a mass of fissionable material. The ratio of the total neutrons (or neutron rate) from the source-plus-fuel material condition to the source-only condition is a measure of the neutron multiplication characteristic of the system. In effect, the multiplication factor M is a reactivity

measurement, characteristic of the composition and geometry of the system as defined by the relationship of the source, fuel mass, and detector. The multiplication factor can then be defined as

$$M = \frac{\text{no. of neutrons in one generation}}{\text{no. of neutrons in previous generation}} = \frac{CR}{CR_o} \quad . \tag{1}$$

Assuming CR_o represents the neutrons present for the source only condition, then $CR_o \times k_{eff}$ neutrons will be present at the end of the first generation, $CR_o \times k_{eff}^2$ at the end of the second generation, and so on. The total neutrons present in the generation CR is:

$$CR = CR_o + CR_o \times k_{eff} + CR_o \times k_{eff}^2 + \ldots + CR_o \times k_{eff}^{n-1}$$

$$= CR_o \left(1 + k_{eff} + k_{eff}^2 + \ldots + k_{eff}^{n-1}\right) \tag{2}$$

and the multiplication factor, M, becomes

$$M = \frac{CR_o\left(1 + k_{eff} + k_{eff}^2 + \ldots + k_{eff}^{n-1}\right)}{CR_o} \tag{3}$$

$$= 1 + k_{eff} + k_{eff}^2 + \ldots + k_{eff}^{n-1} \quad . \tag{4}$$

M, the multiplication factor, is the total number of neutrons present in the assembly per source neutron as seen from Eq. (3), and noting that Eq. (4) is a binomial series, M can be expressed as

$$M = \frac{CR}{CR_o} = \frac{1}{1 - k_{eff}} \quad . \tag{5}$$

Rewriting Eq. (5) for k_{eff}, the following expression is derived:

$$k_{eff} = 1 - \frac{1}{M} \tag{6}$$

and

$$k_{eff} = 1 - \frac{CR_o}{CR} \quad . \tag{7}$$

The above relationships apply only for the subcritical state since, as seen from Eq. (5), M approaches infinity as k_{eff} approach 1. This fact makes the 1/M versus fuel method a valuable technique since 1/M is equal to CR_o/CR, and this term approaches zero as k_{eff} approach 1. The term CR_o/CR can be plotted on ordinary rectangular graph paper from a maximum (normalized) value of 1 to 0, whereas a plot of M could not be made (M tending to infinity as $k_{eff} \rightarrow 1$) and would

yield limited information. Thus, as fuel material is added to the system and CR changes (increases), a series of datum points can be obtained and plotted which represents 1/M as a function of fuel mass.

Extrapolation of the plot after each step to zero produces a prediction of critical mass as defined by the extrapolated intercept on the abscissa (x-axis). Typically, the parameter CR is a neutron count rate or total neutron count for a specified time period measured with a low-level neutron detection system. Complete data acquisition requires that several neutron detectors be placed in and around the fuel material so that different source-fuel-detector geometries are obtained. It is desirable to always assure that fuel material is between the source and detector; however, depending on the geometry, it is not always possible in practice to have the detector completed shielded by fuel material. Because of this limitation, detector response to fuel addition behaves differently for the various geometries.

Typical plots are shown in Figure 15 for various geometries. As indicated, caution is required in interpreting and applying the predicted values resulting from the plot. Curve 1 demonstrates typical behavior of a geometry that has too great a separation distance between source and detector or the fuel material does not entirely shield the source. In other words, the multiplied count is not representative of the early fuel additions because the source contribution masks the effect of fuel. Early predictions, dotted line A, for this geometry would result in a very nonconservative approach. Curve 3 represents the plot of data for a geometry wherein either the fuel masks the source contribution or the separation distance between the source and detector is too small. Early predictions with this geometry, dotted line B, result in an underestimate of critical mass and is a somewhat conservative approach. Curve 2 represents the ideal geometry. Obviously, combining all plots provides a satisfactory guide for a safe approach to critical. Finally, as shown, all plots terminate at the same critical mass since the distortion effects become progressively smaller in the vicinity of delayed critical so that as 1/M approaches zero, the extrapolated critical points become more reliable. The 1/M method applied to subcritical systems provides a convenient measurement for the degree of subcriticality.

Initial Critical Loading Experiment

The initial loading to critical utilizes the standard 1/M technique, as discussed in the preceding section, to control the incremental fuel additions. Complete procedures used for the loading are given in Appendix A. Basically, the procedures provide for two major loading sequences: first, to load the bottom half of the reactor (nine plates) which is the safety block, and second, to load the top half of the reactor (nine plates). This method assures that there is substantial reactivity worth that can always be removed from the system in that the safety block is movable. Further, as the control elements and burst element are added, all fuel loading increments are added with these elements in their least reactive positions (fully withdrawn).

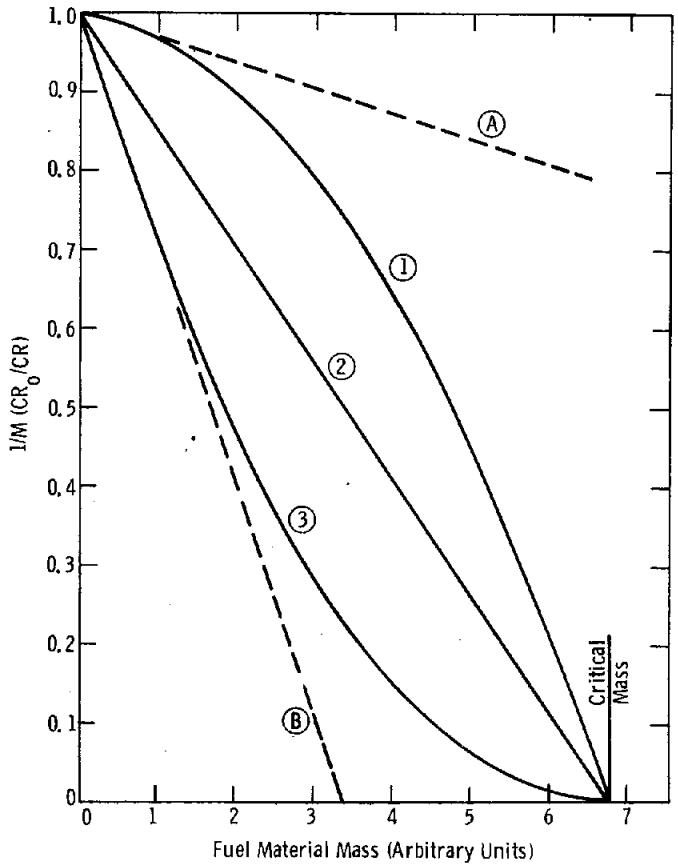

Figure 15. Typical 1/M Plots for Various Source-Fuel Detector Geometries

This procedure assures that the assembly is on the order of $4 subcritical (based on design calculations) even when all fuel plates are in place and the safety block in the full-up position. Hence, conservation is inherent in the method of approach, and since the safety block is part of the protection system, it also can be scrammed to provide shutdown at any stage of loading.

Fuel plates are loaded manually and one at a time onto the assembly; that is, two or more fuel plates are not simultaneously added to the assembly even though the 1/M plot and calculations may predict the allowable addition of several fuel plates. Fuel plates that make up the safety block are assembled first on the upper stationary part of the reactor stand. Following assembly, these nine plates are removed and placed on the safety block drive mechanism. The upper core half of nine plates is then assembled in a step-by-step procedure. The specific loading sequence and number of fuel plates to be added between each set of multiplication measurements is based on previous physics calculations and the 1/M plot. Procedures (as set forth in Appendix A) are essentially the same loading to critical procedures previously used by Sandia Laboratories operations personnel for other reactors of this type at the Sandia Pulsed Reactor Facility.

After each fuel plate addition, the criticality state of the core is determined, that is, the 1/M plot is extended based on the new datum point. Four channels of neutron detection are used (two BF_3 chamber and two fission chambers) located in fixed positions around the core/source geometry as shown in Figure 16. A representative schematic of the neutron detection channels is shown in Figure 17. The neutron source is a standard Am-Be source emitting about 1.47×10^6 neuts/sec. This source is positioned on the reactor stand at the geometric center of the core such that as fuel material is added, the fuel material will be between the source and detectors thereby providing an optimum system geometry. Total neutron count data (a counting time of 100 seconds is used throughout the experiment) on each channel provides information for determining the multiplication factor which in turn allows k_{eff} to be calculated for each loading increment. The 1/M plots thus developed are used to evaluate the physics calculations and from this composite examination, the next incremental loading can be determined by extrapolating the data to obtain an estimate of the critical loading.

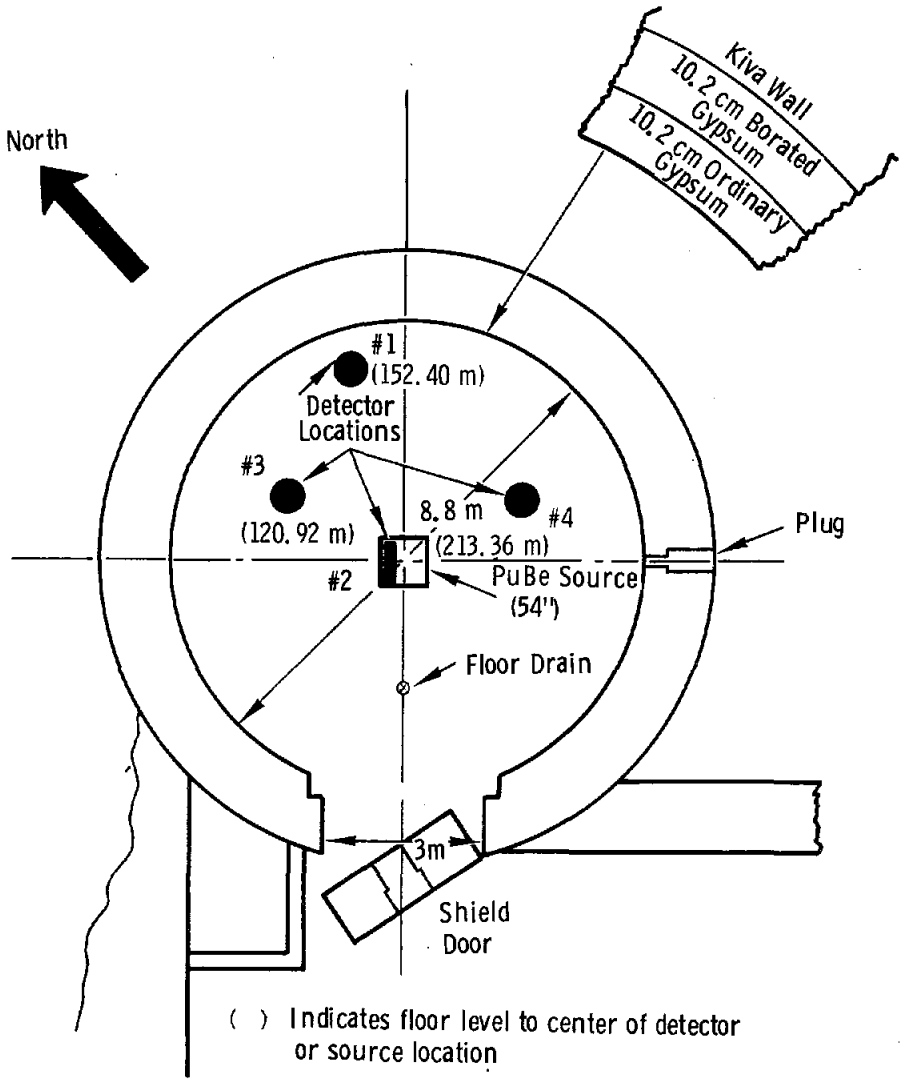

Figure 16. Detector Locations in Reactor Building

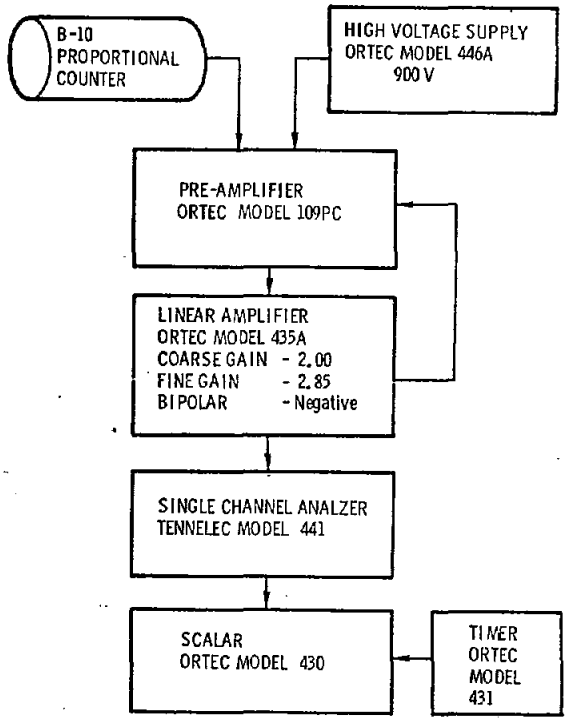

Figure 17. Typical Instrument Equipment Arrangement

Experiment Geometry and Equipment

The physical relationship of the source, fuel material, and detectors is shown in Figure 16. Three detectors are located around the periphery of the core and one detector is located on the lower part of the reactor stand. Detectors for the four systems are:

System 1 - BF_3

System 2 - CIC

System 3 - BF_3

System 4 - BF_3

Figure 17 shows a typical equipment arrangement used for all four channels. The neutron source is a 0.65-ci (0.189 gms of Am) Am-Be neutron source and emits 1.47×10^6 neuts/sec based on a calibration of this source made December 1974.

The geometry for channels 1, 3, and 4 provides optimum neutron multiplication characteristics for the physical limitations inherent in the facility because fuel material is always between the source and detector. Channel 2 geometry provides less than optimum characteristics since the observed neutron count will be biased on the high side due to the fact that there is always more

fuel material between this detector and source as compared to the geometries for the other channels. The 1/M plot for this channel would be expected to follow the type of curve for this geometry (see curve 3, Figure 15) and thereby provide the early conservatism in the approach to critical (this is discussed later in this section).

Summary of Results

Actual data for the approach to critical and subcritical reactivity worth measurements are given in Tables IV through XI, and the approach to critical results are plotted in Figures 18 through 21.

Approach to Critical

The critical assembly is achieved with a total core loading of 258.485 kg with control element 1 at 3319 units (9000 to 0 units full travel with 9000 units full down position), control elements 2 and 3 full down and the burst element full up. The desired configuration is to have all control elements at about mid-range to accommodate experiments and on this basis, the core loading is reduced to 227.747 kg. Representative control element positions for this loading are 4200, 5853, and 5853 units respectively for control elements 1, 2, and 3 (burst element down). This indicates that the combined worth of the two outermost fuel plates is about $1.55 based on the integral worth curves shown in Chapter III.

Subcritical Reactivity Worth Measurements

Subcritical reactivity worth measurements are significantly affected by such factors as source-fuel-detector geometries, sensitivity of the instrumentation system, etc. As a result, each parameter measured with a subcritical core cannot be characterized by a single value but can (and should) be considered as only representative of the true value. Although, a perfect set of conditions--geometry, detectors, no external influence, etc.--would produce true and accurate values. Perfect conditions cannot be obtained and as a result the subcritical reactivity worths have an inherent large error factor. Reactivity worth values shown below are the "best" values measured based on data obtained for the least perturbed condition possible; normally, as near critical as the particular measurement can be made.

Subcritical Reactivity Worth Measurement of Reactor Pit -- The reactor is mounted on an elevator which is used to raise and lower the reactor. The elevator can be lowered into a concrete pit such that at the bottom of its travel, the reactor is completely below grade and entirely housed inside the pit. A large steel-cased lead-filled (20.3 cm-thick) shield door can be closed over the pit to effect complete enclosure of the reactor for personnel shielding purposes. Reactivity

effects of the concrete pit are measured with the shield door open and closed. Representative data for these measurements show that the reactivity worths are as follows:

Pit with door closed:	- $ 3.00
Pit with door open:	- $ 15.17
Shield door:	+ $ 12.17

Elevator full down:	- $ 15.17
Elevator full up:	- $ 24.33
Pit worth:	+ $ 9.16

As indicated, the above values are representative only of the relative change and can be considered as approximate "true" values since datum points at selected loadings result in reactivity worths which can vary from the above values by as much as $2.00. However, the noted values are the "best" estimate based on the fact that the data obtained for determining these reactivity worths are taken as near critical as possible.

Subcritical Reactivity Worth Measurement of Safety Block -- The "best" estimate of the safety block reactivity worth is based on measurements made for a total core loading of 243.107 kg (17 fuel plates) with all control elements and the burst element fully down. The reactivity worth calculated from the corresponding set of data yields a value of $19.95.

Other data obtained for different core configurations, such as a smaller core loading and/or different control element positions, result in safety block reactivity worths different than the above by a factor of almost twice the "best" value, which illustrates the care that must be taken in evaluating the results of subcritical measurements.

Total Worth of all Reactivity Control Elements -- The worth of all reactivity control elements, three control elements plus the burst element, without the shroud is about $17.17, based on an average value determined from the data obtained with channel 3 and channel 4.

The burst element worth as determined with subcritical measurements varies over a range of roughly $0.90 to $1.45. Channel 4 appears to provide the most reliable data for this measurement, which yields the $1.45 value.

TABLE IV

Approach to Critical-Subcritical Measurements
Reactor Out of Pit/Safety Block Up/Elements Down
Channel 1

Number of Plates	Total Mass (kg)	Total Counts[a]	1/M	k
Source	-	5475	-	-
1	6.778	5873	0.9322	0.0678
2	21.818	6374	0.8603	0.1387
3	32.107	7026	0.7792	0.2208
4[b]	43.892	6783	0.8072	0.1928
5	58.940	7699	0.7111	0.2889
6	74.241	9147	0.5985	0.4015
7	89.580	10841	0.5050	0.4950
8	104.917	12827	0.4268	0.5732
9	120.254	15048	0.3638	0.6352
10	135.594	17506	0.3127	0.6863
11	150.990	20470	0.2674	0.7326
12	166.359	24188	0.2264	0.7736
10[c]	136.030	22020	0.2486	0.7514
11	151.070	26584	0.2060	0.7940
12	166.359	33370	0.1641	0.8359
13	181.721	42331	0.1293	0.8707
14	197.077	53921	0.1015	0.8985
15	212.409	69884	0.0783	0.9217
16	227.765	93569	0.0585	0.9415
17	243.107	131581	0.0416	0.9584
18	258.485	207939	0.0263	0.9737

a. Corrected for background.

b. First three plates inverted to safety block position.

c. Plates 4 through 12 inverted to safety block; plates 2 and 3 removed.

TABLE V

Approach to Critical-Subcritical Measurements
Reactor Out of Pit/Safety Block Up/Elements Up
Channel 1

Number of Plates	Total Mass (kg)	Total Counts[a]	1/M	k
Source	-	5475	-	-
1	6.778	5873	0.9322	0.0678
2	21.818	6374	0.8603	0.1387
3	31.107	7026	0.7792	0.2208
4[b]	43.892	6783	0.8072	0.1928
5	58.940	7699	0.7111	0.2889
6	74.241	9147	0.5985	0.4015
7	89.580	10841	0.5050	0.4950
8	104.917	12827	0.4268	0.5732
9	120.254	15048	0.3638	0.6352
10	135.594	17506	0.3127	0.6863
11	150.990	20470	0.2674	0.7326
12	166.359	24188	0.2264	0.7736
10[c]	136.030	40330	0.1358	0.8642
11	151.070	58785	0.0431	0.9069
12	166.359	102117	0.0536	0.9454
13	181.721	278543	0.0197	0.9803
14[d]	197.077	1632059	0.0034	0.9966

a. Corrected for background.

b. First three plates inverted to safety block position.

c. Plates 4 through 12 inverted to safety block; plates 2 and 3 removed.

d. Control element 3 at 5200 units.

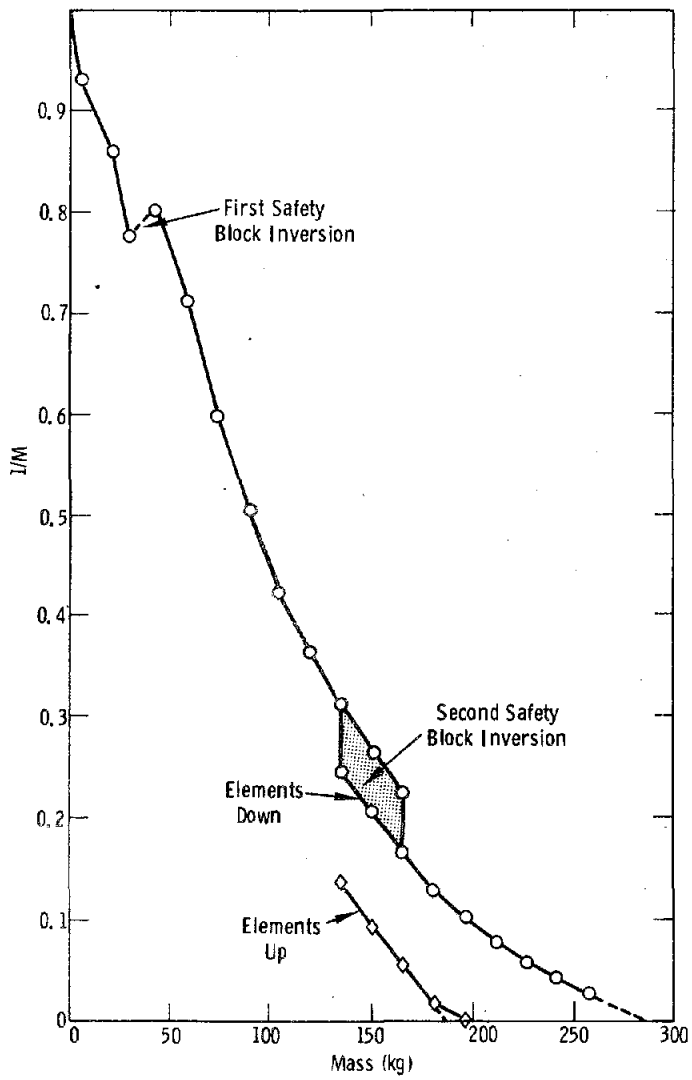

Figure 18. Approach to Critical-Subcritical Measurements, Channel 1

TABLE VI

Approach to Critical-Subcritical Measurements
Reactor Out of Pit/Safety Block Up/Elements Down
Channel 2

Number of Plates	Total Mass (kg)	Total Counts[a]	1/M	k
Source	-	13340	-	-
1	6.778	14530	0.9181	0.0819
2	21.818	16030	0.8322	0.1678
3	31.107	18109	0.7367	0.2633
4[b]	43.892	19341	0.6897	0.3103
5	58.940	21204	0.6291	0.3709
6	74.241	23308	0.5723	0.4277
7	89.580	25778	0.5175	0.4825
8	104.917	28704	0.4647	0.5353
9	120.254	31382	0.4251	0.5749
10	135.594	34633	0.3852	0.6148
11	150.990	37944	0.3516	0.6484
12	166.359	42280	0.3155	0.6845
10[c]	136.030	28781	0.4635	0.5365
11	151.070	34173	0.3904	0.6096
12	166.359	41442	0.3219	0.6781
13	181.721	50887	0.2621	0.7379
14	197.077	63013	0.2117	0.7883
15	212.409	78934	0.1690	0.8310
16	227.765	102567	0.1301	0.8699
17	243.107	139994	0.0953	0.9047
18	258.485	214597	0.0622	0.9378

a. Corrected for background.

b. First three plates inverted to safety block position.

c. Plates 4 through 12 inverted to safety block; plates 2 and 3 removed.

TABLE VII

Approach to Critical-Subcritical Measurements
Reactor Out of Pit/Safety Block Up/Elements Up
Channel 2

Number of Plates	Total Mass (kg)	Total Counts[a]	1/M	k
Source	-	13340	-	-
1	6.778	14530	0.9181	0.0819
2	21.818	16030	0.8322	0.1678
3	31.107	18109	0.7367	0.2633
4[b]	43.892	19341	0.6897	0.3103
5	58.940	21204	0.6291	0.3709
6	74.241	23308	0.5723	0.4277
7	89.580	25778	0.5175	0.4825
8	104.917	28704	0.4647	0.5353
9	120.254	31382	0.4251	0.5749
10	135.594	34633	0.3852	0.6148
11	150.990	37944	0.3516	0.6484
12	166.359	42280	0.3155	0.6845
10[c]	136.030	65204	0.2046	0.7954
11	151.070	92464	0.1443	0.8557
12	166.359	155917	0.0856	0.9144
13	181.721	405330	0.0329	0.9671
14[d]	197.077	2072426	0.0064	0.9936

a. Corrected for background.

b. First three plates inverted to safety block position.

c. Plates 4 through 12 inverted to safety block; plates 2 and 3 removed.

d. Control element 3 at 5200 units.

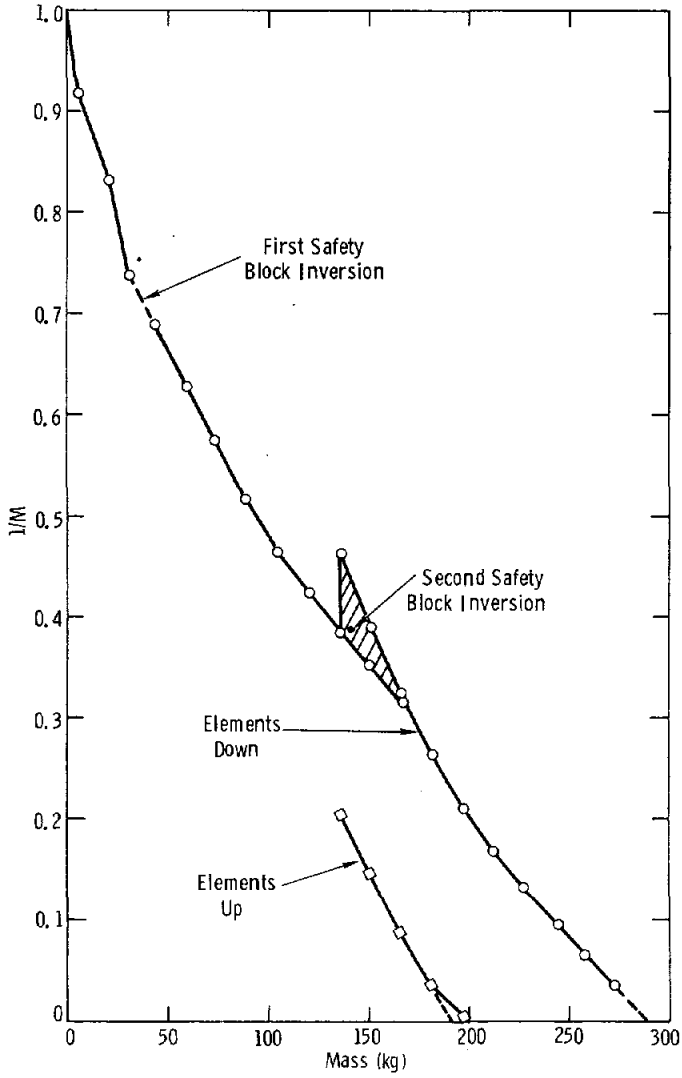

Figure 19. Approach to Critical-Subcritical Measurements, Channel 2

TABLE VIII

Approach to Critical-Subcritical Measurements
Reactor Out of Pit/Safety Block Up/Elements Down
Channel 3

Number of Plates	Total Mass (kg)	Total Counts[a]	1/M	k
Source	-	5491	-	-
1	6.778	5979	0.9184	0.0816
2	21.818	6486	0.8466	0.1534
3	31.107	7304	0.7518	0.2482
4[b]	43.892	7502	0.7319	0.2681
5	58.940	8693	0.6317	0.3683
6	74.241	10354	0.5303	0.4697
7	89.580	12397	0.4429	0.5571
8	104.917	14606	0.3759	0.6241
9	120.254	17399	0.3156	0.6844
10	135.594	20175	0.2722	0.7278
11	150.990	23691	0.2318	0.7682
12	166.359	28099	0.1954	0.8046
10[c]	136.030	27273	0.2013	0.7987
11	151.070	33372	0.1645	0.8355
12	166.359	41694	0.1317	0.8683
13	181.721	52748	0.1041	0.8959
14	197.077	67239	0.0817	0.9183
15	212.409	86596	0.0634	0.9366
16	227.765	116427	0.0472	0.9528
17	243.107	162169	0.0339	0.9661
18[d]	258.485	2553544	0.0022	0.9978

a. Corrected for background.

b. First three plates inverted to safety block position.

c. Plates 4 through 12 inverted to safety block; plates 2 and 3 removed.

d. Control element 1 at 3319 units.

TABLE IX

Approach to Critical-Subcritical Measurements
Reactor Out of Pit/Safety Block Up/Elements Up
Channel 3

Number of Plates	Total Mass (kg)	Total Counts[a]	1/M	k
Source	-	5491	-	-
1	6.778	5979	0.9184	0.0816
2	21.818	6486	0.8466	0.1534
3	31.107	7304	0.7518	0.2482
4[b]	43.892	7502	0.7319	0.2681
5	58.940	8693	0.6317	0.3683
6	74.241	10354	0.5303	0.4697
7	89.580	12397	0.4429	0.5571
8	104.917	14606	0.3759	0.6241
9	120.254	17399	0.3156	0.6844
10	135.594	20175	0.2722	0.7278
11	150.990	23691	0.2318	0.7682
12	166.359	28099	0.1954	0.8046
10[c]	136.030	46611	0.1178	0.8822
11	151.070	67943	0.0808	0.9192
12	166.359	117665	0.0467	0.9533
13	181.721	320365	0.0171	0.9829
14[d]	197.077	1986826	0.0028	0.9972

a. Corrected for background.

b. First three plates inverted to safety block position.

c. Plates 4 through 12 inverted to safety block; plates 2 and 3 removed.

d. Control element 3 at 5200 units.

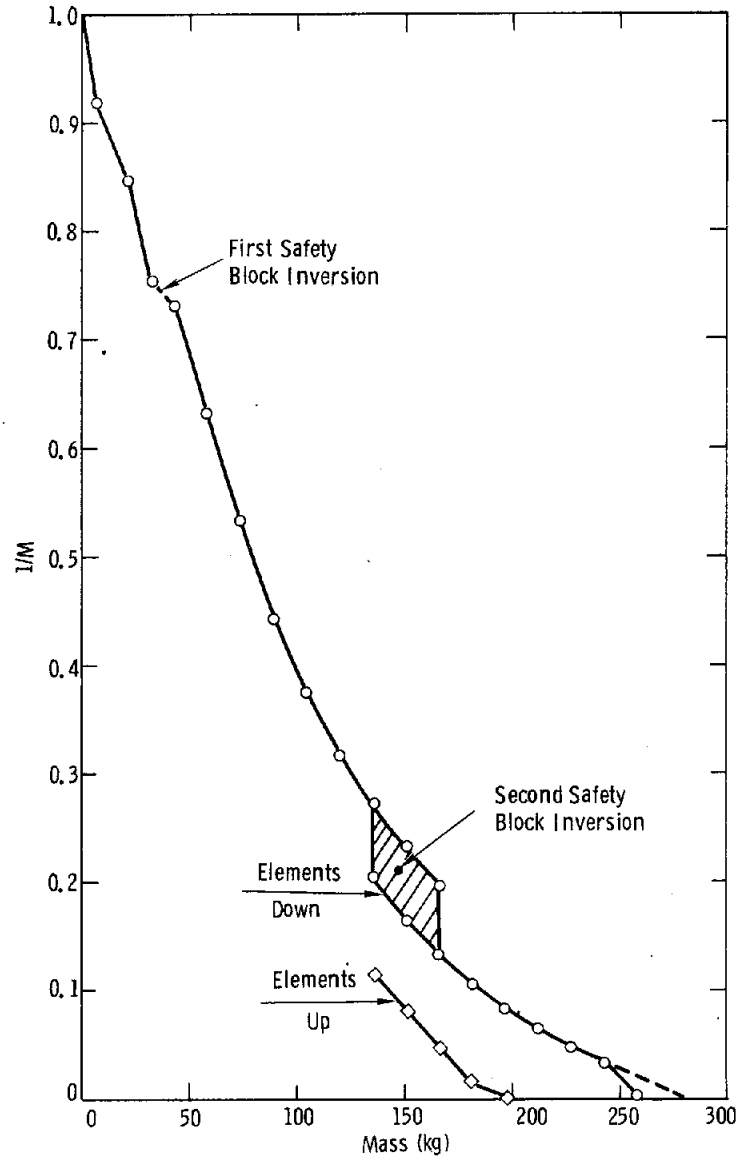

Figure 20. Approach to Critical-Subcritical Measurements, Channel 3

TABLE X

Approach to Critical-Subcritical Measurements
Reactor Out of Pit/Safety Block Up/Elements Down
Channel 4

Number of Plates	Total Mass (kg)	Total Counts[a]	1/M	k
Source	-	6791	-	-
1	6.778	5922	1.1467	-
2	21.818	6430	1.0561	-
3	31.107	7457	0.9107	0.0893
4[b]	43.892	9900	0.6860	0.3140
5	58.940	10989	0.6180	0.3820
6	74.241	13012	0.5219	0.4781
7	89.580	15518	0.4376	0.5624
8	104.917	18281	0.3715	0.6285
9	120.254	21394	0.3174	0.6826
10	135.594	25147	0.2700	0.7300
11	150.990	29438	0.2307	0.7693
12	166.359	34270	0.1982	0.8018
10[c]	136.030	34929	0.1944	0.8056
11	151.070	41974	0.1618	0.8382
12	166.359	52662	0.1290	0.8710
13	181.721	66561	0.1020	0.8980
14	197.077	84572	0.0803	0.9197
15	212.409	108642	0.0625	0.9375
16	227.765	145712	0.0466	0.9534
17	243.107	203421	0.0334	0.9666
18[d]	258.485	320166	0.0212	0.9788

a. Corrected for background.

b. First three plates inverted to safety block position.

c. Plates 4 through 12 inverted to safety block; plates 2 and 3 removed.

d. Control element 1 at 3319 units.

TABLE XI

Approach to Critical-Subcritical Measurements
Reactor Out of Pit/Safety Block Up/Elements Up
Channel 4

Number of Plates	Total Mass (kg)	Total Counts[a]	1/M	k
Source	-	6791	-	-
1	6.778	5922	1.1467	-
2	21.818	6430	1.0561	-
3	31.107	7457	0.9107	0.0893
4[b]	43.892	9900	0.6860	0.3140
5	58.940	10989	0.6180	0.3820
6	74.241	13012	0.5219	0.4781
7	89.580	15518	0.4376	0.5624
8	104.917	18281	0.3715	0.6285
9	120.254	21394	0.3174	0.6826
10	135.594	25147	0.2700	0.7300
11	150.990	29438	0.2307	0.7693
12	166.359	34270	0.1982	0.8018
10[c]	136.030	54612	0.1243	0.8757
11	151.070	79808	0.0851	0.9149
12	166.359	139738	0.0486	0.9514
13	181.721	382600	0.0177	0.9823
14[d]	197.077	2335914	0.0029	0.9971

a. Corrected for background.

b. First three plates inverted to safety block position.

c. Plates 4 through 12 inverted to safety block; plates 2 and 3 removed.

d. Control element 3 at 5200 units.

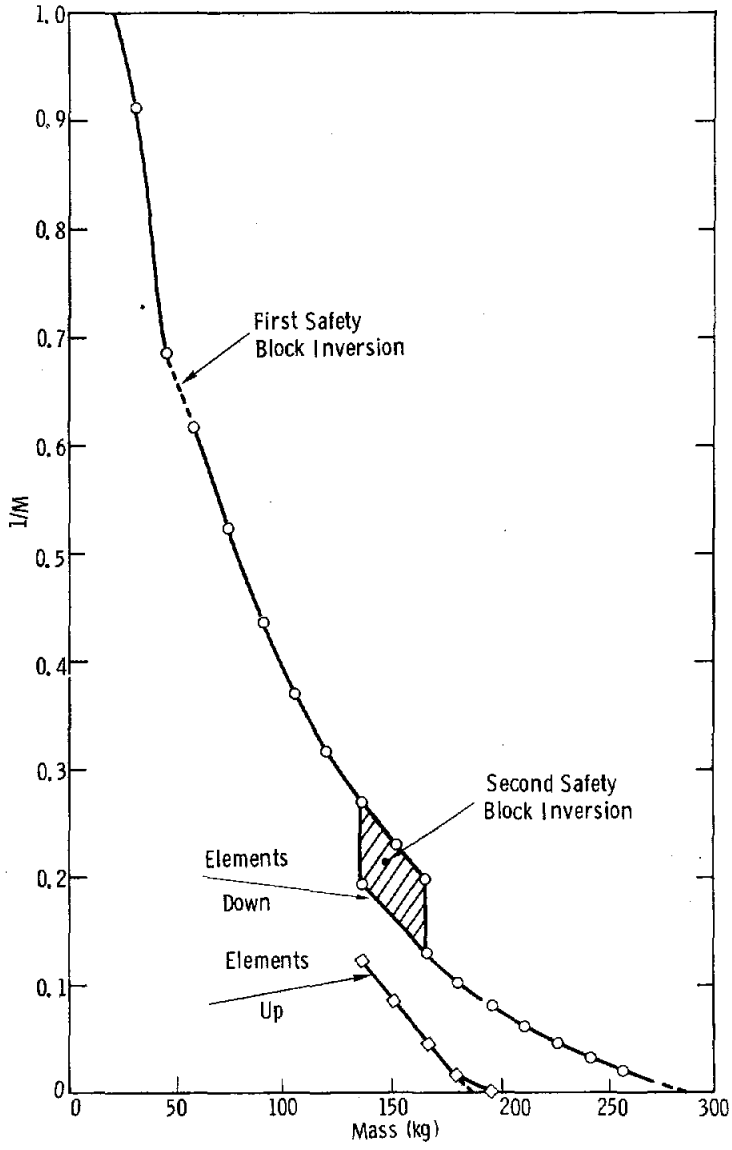

Figure 21. Approach to Critical-Subcritical Measurements, Channel 4

Evaluation of 1/M Plots -- The plots for the 1/M data are shown in Figures 18 through 21. Each figure shows all elements DOWN and all elements UP plots. Two features (offsets) in the "curve" are important to note since these changes occurred due to physically relocating the fuel material with respect to the detectors at two prescribed intervals in the loading procedures. Relative to the second offset, Channels 1, 3, and 4 exhibited the same behavior, that is, an increase in the multiplication, whereas channel 2 exhibited initially a decrease. The increase in channels 1, 3, and 4 is due to the positioning of more fuel material closer on a relative basis to the reflector elements as compared to the same amount of fuel material mounted in the upper core half position. The apparent decrease in the channel 2 multiplication is most likely due to a slightly increased shielding (or self absorption) affect of the fuel material.

All of the figures show a nearly linear plot for the major portion of the loading range indicating good source-fuel material-detector geometry. The worst plot is that data from channel 2, which has the poorest geometry (see Section on Technique for Experimental Determination of Core Size) and, as indicated above, is significantly affected by the proximity of fuel material and its relative change in mass. It should also be noted that the first few data points for channel 4 show a 1/M value greater than 1.0, indicating some degree of self-shielding as fuel material is initially added.

The predicted critical masses based on an extension of the 1/M plot to "0" for the four channels are about 284, 288, 280, and 288 kg, respectively, with all elements down; and 187, 190, 187, and 188 kg, respectively, with all elements up.

Physical Loading Sequence

The actual loading sequence followed for addition of the 18 fuel plates is given in Table XII and the completed core geometry is shown in Figure 22. The operational core consists of only 16 fuel plates, the outermost two plates (upper and lower core halves) being removed and replaced with steel rings.

Total core loading with sixteen plates is as follows:

Uranium = 227.7 kg

U-235 = 190.9 kg

TABLE XII

SPR III Loading to Critical Sequence

Step	Plate	Plate ID No.	Unplated Mass (grams)	Mass Uranium (grams)	Mass U-235 (grams)	Accumulated Mass (grams)
1	A-2	7880-46-0845	6778	6105	5687	6778
2	B-2	7880-50-0848	15040	13541	12615	21818
3	C-7	C-5008	15289	13736	12798	37107
4	A-1	7880-46-0853	6785	6115	5696	43892
5	B-1	7880-50-0854	15048	13512	12584	58940
6	C-1	C-5009	15301	13725	12793	74241
7	C-2	C-5010	15339	13821	12881	89580
8	C-3	C-5011	15335	13771	12834	104915
9	C-4	C-5005	15339	13768	12833	120254
10	C-5	C-5041	15340	13781	12840	135594
11	C-6	C-5020	15396	13887	12941	150990
12	D-1	7880-54-0850	15369	13838	12893	166359
13	Plates B-2 and C-7 removed, S. B. Inverted					
14	B-2	7880-50-0848	15040	13541	12615	151070
15	C-7	C-5008	15289	13736	12798	166359
16	C-8	C-5019	15362	13856	12903	181721
17	C-9	C-5016	15356	13836	12886	197077
18	C-10	C-5050	15332	13803	12856	212409
19	C-11	C-5025	15356	13836	12895	227765
20	C-12	C-5015	15342	13755	12813	243107
21	D-2	7880-54-0847	15378	13877	12931	258485
22	Plates C-6 and C-12 removed					
23	Total Mass In Core		227747	204921	190925	227747

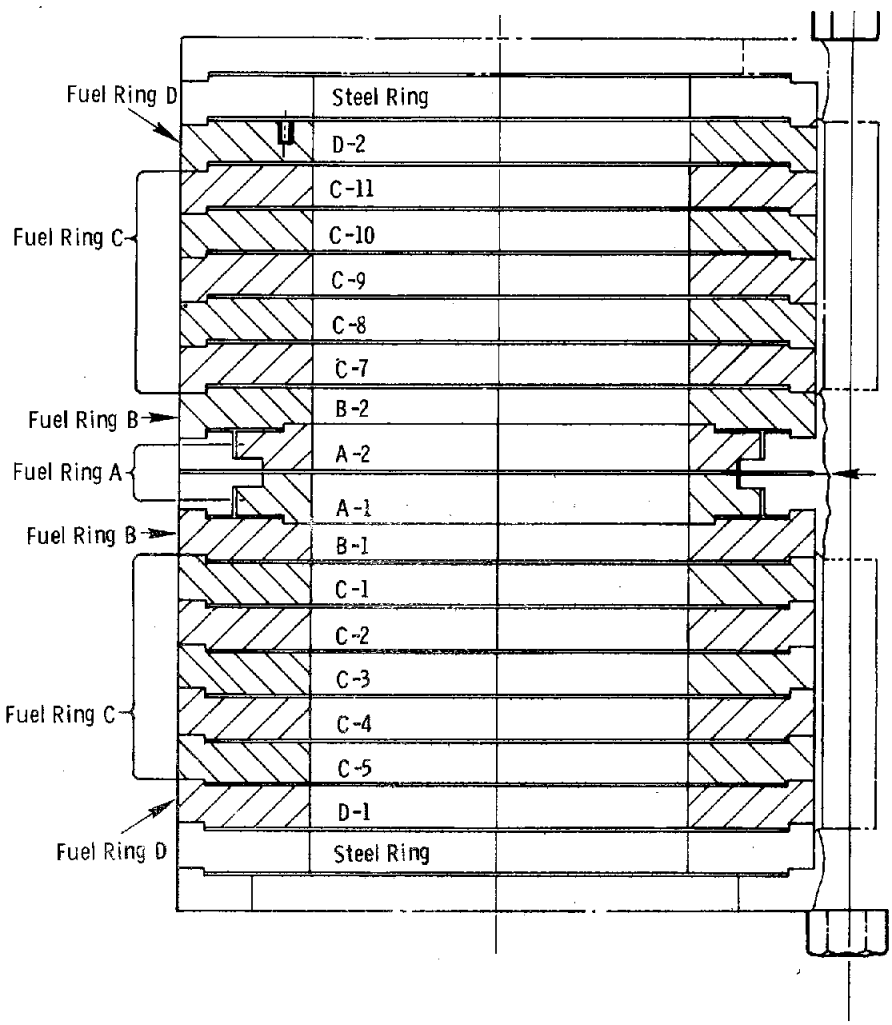

Figure 22. Assembled SPR III Core

CHAPTER III

ZERO AND LOW POWER TESTS

The zero and low power tests are defined as those experiments conducted with the reactor to determine nuclear characteristics of the control elements, burst element, various materials in the experiment cavity, safety block, and shroud. Tests are conducted in accordance with the procedures given in Appendix A entitled Test Series Proposal No. 2. Purpose of this series of tests is to provide the static data required for proceeding into the dynamic, that is, pulse regime.

Reactor operating limitations observed during these tests are summarized below:

1. Maximum reactivity configuration ≤ 95¢
2. Minimum period not shorter than 150 ms
3. Maximum fuel temperature ≤ 100°C.

Control Element Calibration

The reactor utilizes three 2.54-m-thick copper reflectors mounted externally to the core and positioned 90 degrees relative to each other. Several coarse calibration curves (integral worth) were made during the early stages of measurements with Control Element 1, and from this data it was recognized that positions of the other control elements with respect to the control element being calibrated affects the measured total worth; hence, it became necessary to define an operational configuration of the control elements and then perform the associated calibrations. On this basis, the following configurations were chosen for final calibration:

1. Control element 1 calibrated with control element 2 fixed at the delayed critical position with control element 3 fully inserted. Mass adjustments made with control element 3 only.
2. Control element 1 calibrated with control elements 2 and 3 banked at their delayed critical positions. Mass adjustments made with the banked elements.
3. Control element 2 calibrated with control elements 1 and 3 banked at their delayed critical positions. Mass adjustments made with the banked elements.

4. Control element 3 calibrated with control elements 1 and 2 banked at their delayed critical positions. Mass adjustments made with the banked elements.

All control element calibrations are made by using the positive period technique. In order to obtain a positive period with this reactor, the burst element is fired to the full-inserted position to initiate the reactivity input after the control element position is changed. The period is measured with the reactor console log-N instrumentation systems. Results of the calibrations are shown in Tables XIII, XIV, XV, and XVI and Figures 22 through 28. The shroud and boron-loaded thimble are in place for all measurements.

TABLE XIII

Control Element 1 Calibration Using Control Element 2 Fixed and Control Element 3 for Mass Adjustment

Control Element 1 Position				Differential Worth			
Units	cm	Inches	$\Delta\rho$(cents	Cents/ Unit	Cents/ cm	Cents/ Inch	Total Worth (cents)
9000	36.83	14.50					
8000	32.74	12.89	12.48	0.0125	3.050	7.747	12.48
7700	31.51	12.41	6.70	0.0223	5.458	13.863	19.18
7400	30.28	11.92	8.12	0.0271	6.614	16.799	27.30
7100	29.05	11.44	9.83	0.0328	8.007	20.338	37.13
6800	27.83	10.96	11.36	0.0379	9.253	23.503	48.49
6500	26.60	10.47	12.83	0.0428	10.451	26.546	61.32
6200	25.37	9.99	14.31	0.0477	11.656	29.606	75.63
5900	24.14	9.51	14.66	0.0489	11.942	30.333	90.29
5600	22.92	9.02	15.49	0.0516	12.618	32.050	105.78
5300	21.69	8.54	16.01	0.0534	13.041	33.124	121.79
5000	20.46	8.06	15.23	0.0507	12.406	31.511	137.02
4700	19.23	7.57	15.18	0.0506	12.365	31.407	152.20
4500	18.42	7.25	9.45	0.0472	11.546	29.327	161.65
4200	17.19	6.77	14.53	0.0484	11.836	30.063	176.18
3900	15.96	6.28	13.70	0.0457	11.160	28.346	189.88
3600	14.73	5.80	14.03	0.0468	11.428	29.027	203.91
3300	13.50	5.32	14.79	0.0493	12.047	30.600	218.70
3000	12.28	4.83	13.61	0.0454	11.086	28.158	232.31
2700	11.05	4.35	13.05	0.0435	10.630	27.000	245.36
2400	9.82	3.87	12.33	0.0411	10.044	25.512	257.69
2100	8.59	3.38	11.13	0.0371	9.066	23.028	268.82
1800	7.37	2.90	9.70	0.0323	7.901	20.068	278.52
1500	6.14	2.42	8.17	0.0272	6.655	16.904	286.69

(Continued next page)

TABLE XIII (Continued)

Control Element 1 Position				Differential Worth			
Units	cm	Inches	$\Delta\rho$ (cents)	Cents/ Unit	Cents/ cm	Cents/ Inch	Total Worth (cents)
1200	4.91	1.93	6.64	0.0221	5.409	13.739	293.33
0900	3.68	1.45	4.95	0.0165	4.032	10.241	298.28
0600	2.45	0.97	3.46	0.0115	2.818	7.158	301.74
0000	0	0	2.21	0.0037	0.900	2.286	303.95

TABLE XIV

Integral Worth--Control Element 1
Control Elements 2 and 3 Banked

No. 1	No. 2	No. 3	Period (sec)	Worth (cents)	$\Delta\rho$ (cents)	Offset (cents)	Total Worth (cents)	Differential Worth Cents/ Unit	Differential Worth Cents/ Inch
9000	4069	4069	-	-	-	-	0	-	-
8100			84.37	10.85	10.85	0	10.85	0.0121	7.483
7800			42.66	17.55	6.70		17.55	0.0223	13.862
7500			22.78	25.65	8.10		25.65	0.0270	16.759
7200			11.98	35.64	9.99		35.64	0.0333	20.669
6900			6.30	46.88	11.24		46.88	0.0375	23.255
6600			3.05	60.03	13.15		60.03	0.0438	27.207
6900	4570	4570				1.04	-	-	-
6600			72.83	12.11	-		60.03	-	-
6300			22.08	26.11	14.00		74.03	0.0467	28.966
6000			8.76	41.00	14.89		88.92	0.0496	30.807
5700			3.63	56.91	15.91		104.83	0.0530	32.917
6000	4989	4989				0.78	-	-	-
5700			53.25	15.13	-		104.83	-	-
5400			16.52	30.45	15.32		120.15	0.0511	31.697
5100			6.37	46.68	16.23		136.38	0.0541	33.579
4800			2.75	61.86	15.18		151.56	0.0506	31.407
5100	5437	5437				0.41	-	-	-
4800			55.15	14.77	-		151.56	-	-
4500			18.20	28.96	14.19		165.75	0.0473	29.359
4200			7.73	43.21	14.25		180.00	0.0475	29.483
3900			3.50	57.57	14.36		194.36	0.0479	29.710

(Continued on next page)

TABLE XIV (Continued)

Control Element Position No. 1	No. 2	No. 3	Period (sec)	Worth (cents)	$\Delta\rho$ (cents)	Offset (cents)	Total Worth (cents)	Differential Worth Cents/ Unit	Cents/ Inch
4200	5853	5853				1.25	-	-	-
3900			65.28	13.11	-		194.36	-	-
3600			20.46	27.21	14.10		208.46	0.0470	29.172
3300			8.44	41.65	14.44		222.90	0.0481	29.876
3000			3.98	55.24	13.59		236.49	0.0453	28.117
3300	6270	6270				0.33	-	-	-
3000			64.26	13.26	-		236.49	-	-
2700			22.22	26.01	12.75		249.24	0.0425	26.379
2400			10.33	38.15	12.14		261.38	0.0405	25.117
2100			5.43	49.58	11.43		272.81	0.0381	23.648
1800			3.18	59.29	9.71		282.52	0.0324	20.090
1500			1.97	67.54	8.25		290.77	0.0275	17.060
1200			1.28	74.26	6.72		297.49	0.0224	13.903
900			0.85	79.85	5.59		303.08	0.0186	11.566
600			0.63	83.33	3.48		306.58	0.0116	7.200
300			0.51	85.52	2.19		308.75	0.0073	4.531
0			0.50	85.68	0.16		308.91	0.0005	0.331

TABLE XV

Integral Worth--Control Element 2
Control Elements 1 and 3 Banked

Control Element Position No. 1	No. 2	No. 3	Period (sec)	Worth (cents)	$\Delta\rho$ (cents)	Offset (cents)	Total Worth (cents)	Differential Worth Cents/ Unit	Cents/ Inch
4044	9000	4044	-	-	-	-	0	-	-
	8100		78.10	11.50	11.50	0	11.50	0.0128	7.931
	7800		40.90	18.04	6.54		18.04	0.0218	13.531
	7500		21.72	26.34	8.30		26.34	0.0277	17.172
	7200		11.47	36.38	10.04		36.38	0.0335	20.772
	6900		5.86	48.20	11.82		48.20	0.0394	24.455
	6600		2.76	61.76	13.56		61.76	0.0452	28.055
4562	6900	4562	-	-	-	1.39	-	-	-
	6600		72.30	12.17	-		61.76	-	-
	6300		21.49	26.50	14.33		76.09	0.0478	29.648
	6000		8.40	41.73	15.23		91.32	0.0508	31.510
	5700		3.43	57.93	16.20		107.52	0.0540	33.517
	5400		1.22	74.96	17.03		124.55	0.0568	35.234

(Continued on next page)

TABLE XV (Continued)

Integral Worth--Control Element 2
Control Elements 1 and 3 Banked

Control Element Position			Period	Worth	$\Delta\rho$	Offset	Total Worth	Differential Worth	
No. 1	No. 2	No. 3	(sec)	(cents)	(cents)	(cents)	(cents)	Cents/ Unit	Cents/ Inch
5141	5700	5141	-	-	-	1.46	-	-	-
	5400		51.05	15.57	-		124.55	-	-
	5100		16.09	30.86	15.29		139.84	0.0510	31.634
	4800		6.59	46.05	15.19		155.03	0.0506	31.428
	4500		2.91	60.86	14.81		169.84	0.0494	30.641
5578	4800	5578	-	-	-	0.87	-	-	-
	4500		60.60	13.82	-		169.84	-	-
	4200		19.71	27.76	13.94		183.78	0.0465	28.841
	3900		8.54	41.43	13.67		197.45	0.0456	28.283
	3600		3.92	55.52	14.09		211.54	0.0470	29.152
	3300		1.71	69.83	14.31		225.85	0.0477	29.607
6113	3600	6113	-	-	-	0.74	-	-	-
	3300		62.20	13.57	-		225.85	-	-
	3000		21.30	26.62	13.05		238.90	0.0435	27.000
	2700		9.68	39.25	12.63		251.53	0.0421	26.131
	2400		5.03	50.99	11.74		263.27	0.0391	24.290
	2100		2.75	61.83	10.84		274.11	0.0361	22.428
6525	2700	6525	-	-	-	1.63	-	-	-
	2100		31.05	21.43	-		274.11	-	-
	1800		16.32	30.64	9.21		283.32	0.0307	19.055
	1500		10.13	38.46	7.82		291.14	0.0261	16.179
	1200		7.14	44.63	6.17		297.31	0.0206	12.766
	900		5.52	49.28	4.65		301.96	0.0155	9.621
	600		4.64	52.45	3.17		305.13	0.0106	6.559
	300		4.38	53.51	1.06		306.19	0.0035	2.193
	0		4.43	53.29	-0.22		305.97	0.0007	0.455

TABLE XVI

Integral Worth--Control Element 3
Control Elements 1 and 2 Banked

Control Element Position			Period	Worth	Δρ	Offset	Total Worth	Differential Worth	
No. 1	No. 2	No. 3	(sec)	(cents)	(cents)	(cents)	(cents)	Cents/ Unit	Cents/ Inch
4041	4041	9000	-	-	-	0	0	-	-
		8100	83.13	10.97	10.97		10.97	0.0122	7.566
		7800	42.03	17.72	6.75		17.72	0.0225	13.966
		7500	22.25	25.99	8.27		25.99	0.0276	17.110
		7200	11.87	35.80	9.81		35.80	0.0327	20.296
		6900	6.12	47.40	11.60		47.40	0.0387	24.000
		6600	2.93	60.74	13.34		60.74	0.0445	27.600
4547	4547	6900	-	-	-	0.71	-	-	-
		6600	68.71	12.63	-		60.74	-	-
		6300	21.52	26.48	13.85		74.59	0.0462	28.655
		6000	8.33	41.88	15.40		89.99	0.0513	31.862
		5700	3.43	57.93	16.05		106.04	0.0535	33.207
4979	4979	6000	-	-	-	0.92	-	-	-
		5700	53.25	15.13	-		106.04	-	-
		5400	15.67	31.28	16.15		122.19	0.0538	33.414
		5100	6.20	47.17	15.89		138.08	0.0530	32.876
		4800	2.57	63.04	15.87		153.95	0.0529	32.834
5435	5435	5100	-	-	-	0.78	-	-	-
		4800	53.45	15.09	-		153.95	-	-
		4500	17.65	29.44	14.35		168.30	0.0478	29.690
		4200	7.30	44.23	14.79		183.09	0.0493	30.600
		3900	3.25	58.90	14.67		197.76	0.0489	30.352
5861	5861	4200	-	-	-	0.97	-	-	-
		3900	61.36	13.70	-		197.76	-	-
		3600	19.59	27.85	14.15		211.91	0.0472	29.276
		3300	8.15	42.27	14.42		226.33	0.0481	29.834
		3000	3.74	56.37	14.10		240.43	0.0470	29.172
6290	6290	3300	-	-	-	0.58	-	-	-
		3000	62.52	13.52	-		240.43	-	-
		2700	21.61	26.42	12.90		253.33	0.0430	26.690
		2400	0.78	39.08	12.66		265.99	0.0422	26.193
		2100	5.23	50.26	11.18		277.17	0.0373	23.131
		1800	3.05	60.03	9.77		286.94	0.0326	20.214
		1500	1.88	68.31	8.28		295.22	0.0276	17.131
		1200	1.20	75.20	6.89		302.11	0.0230	14.255
		900	0.79	80.62	5.42		307.53	0.0181	11.214
		600	0.57	84.50	3.88		311.41	0.0129	8.028
		300	0.48	86.16	1.66		313.07	0.0055	3.434
		0	0.47	86.46	0.30		313.37	0.0010	0.621

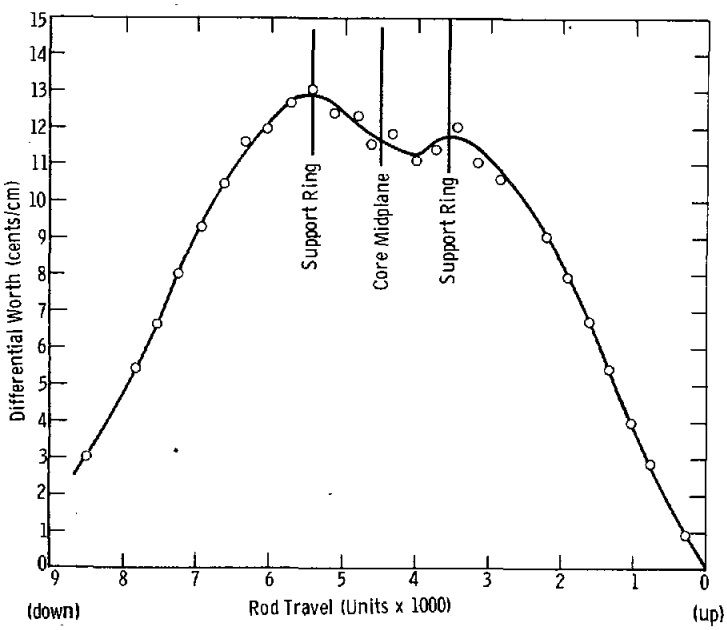

Figure 23. Control Element 1, Differential Worth

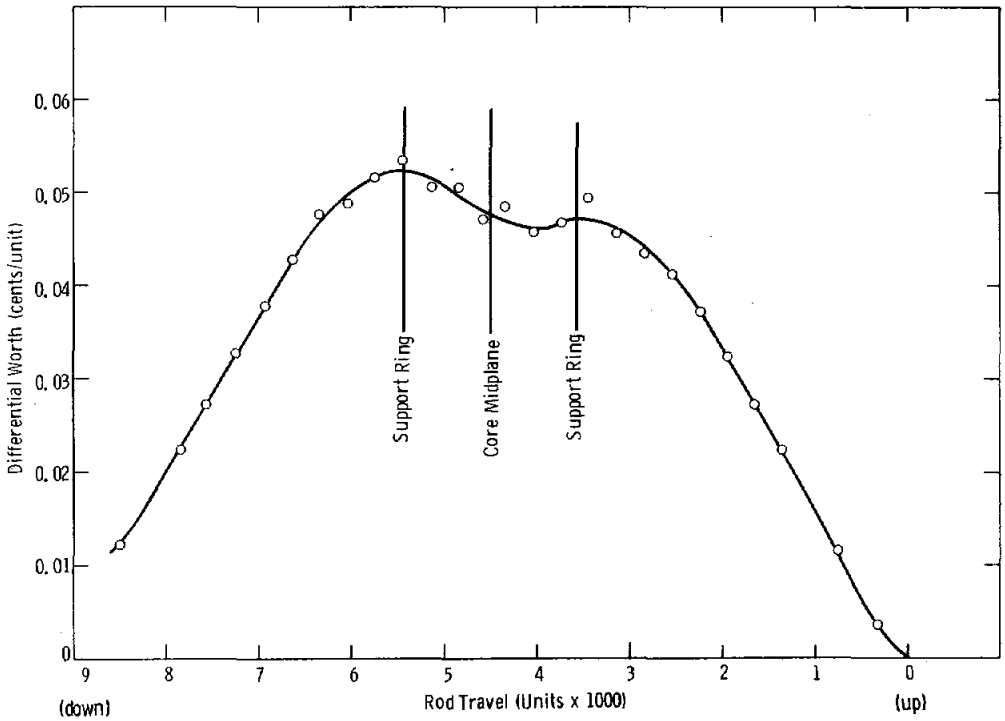

Figure 24. Control Element 1, Differential Worth

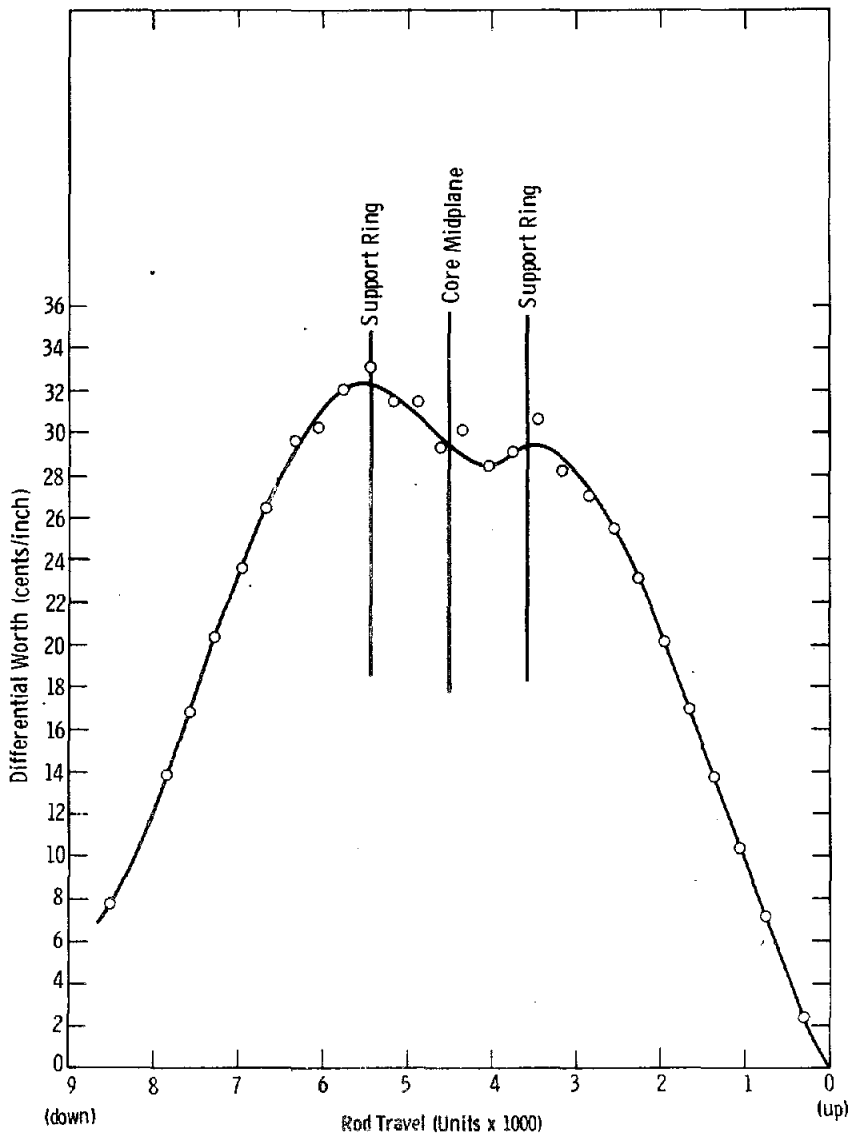

Figure 25. Control Element 1, Differential Worth

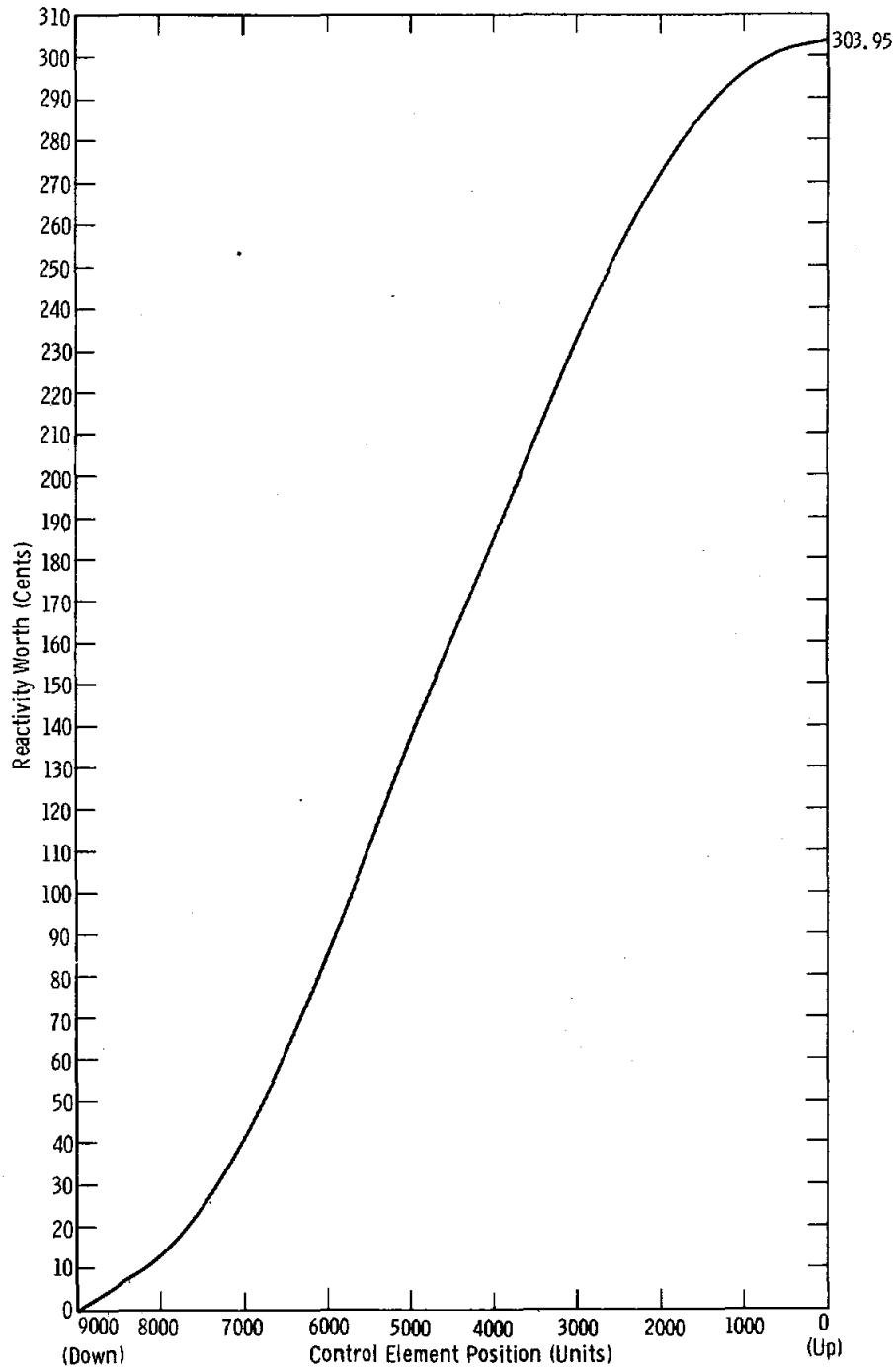

Figure 26. Control Element 1 Calibration with Control Element 2 Fixed at 6608 Units, Mass Adjustment Using Control Element 3

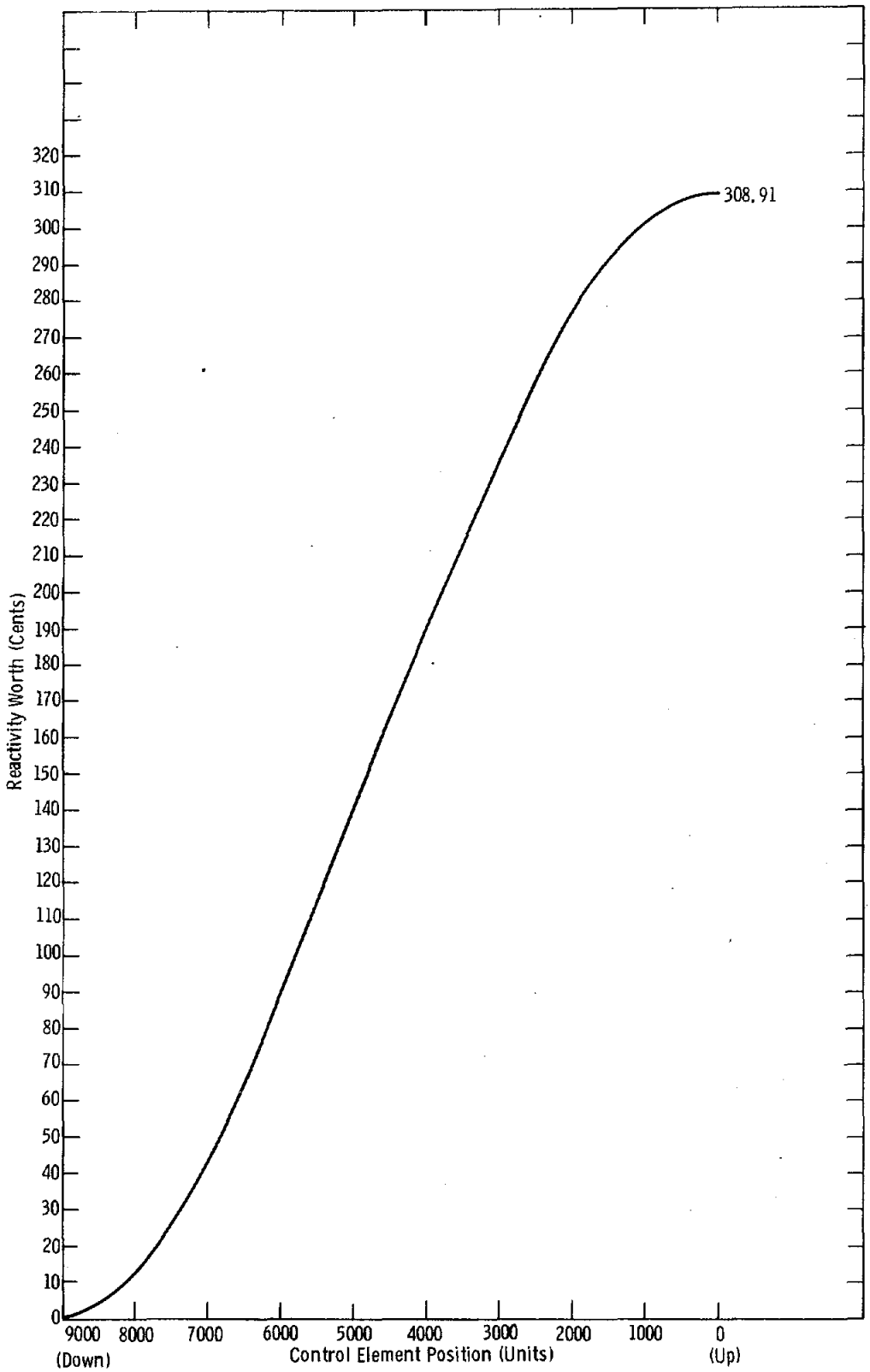

Figure 27. Control Element 1, Integral Worth with Control Elements 2 and 3 Banked

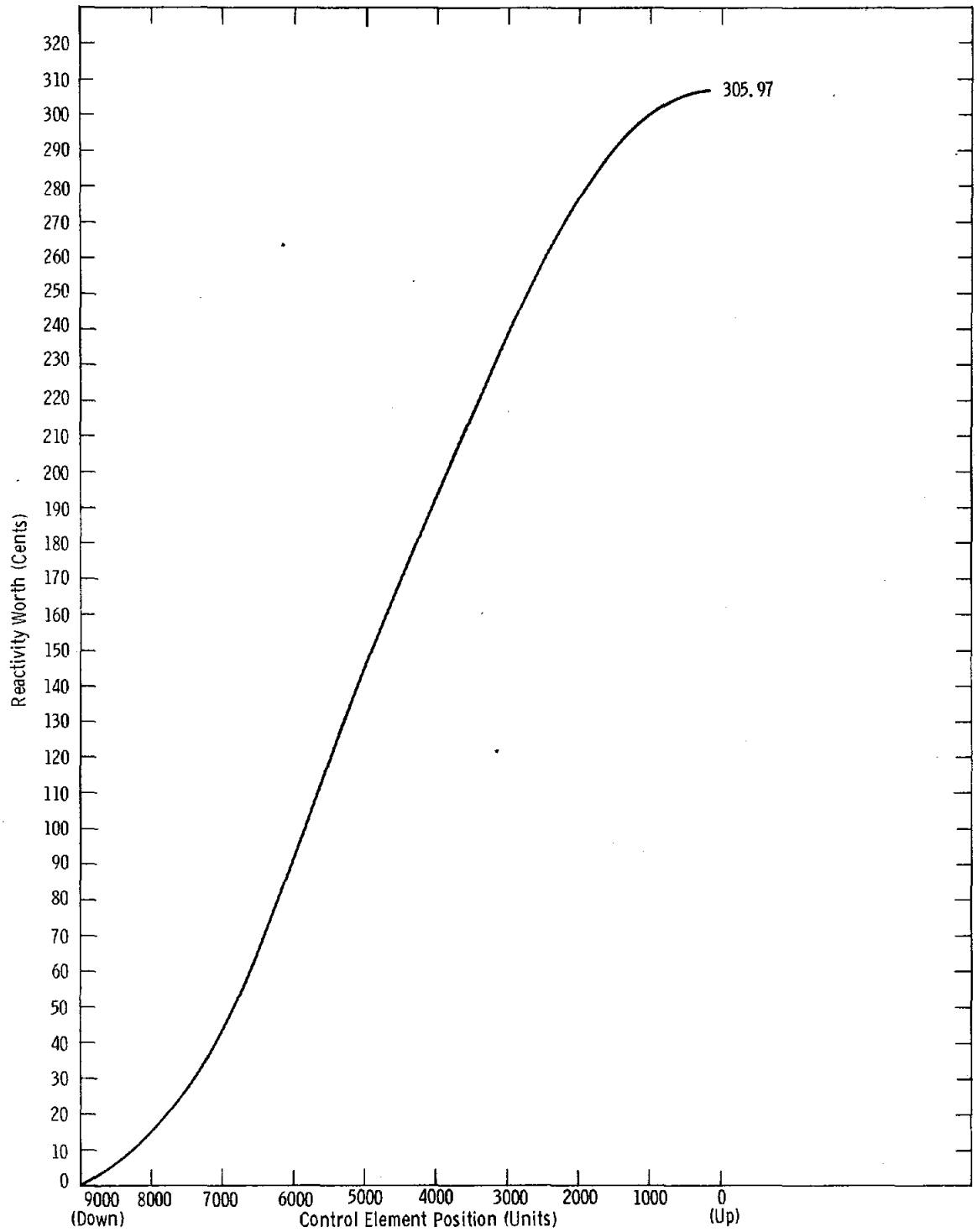

Figure 28. Control Element 2, Integral Worth with Control Elements 1 and 3 Banked

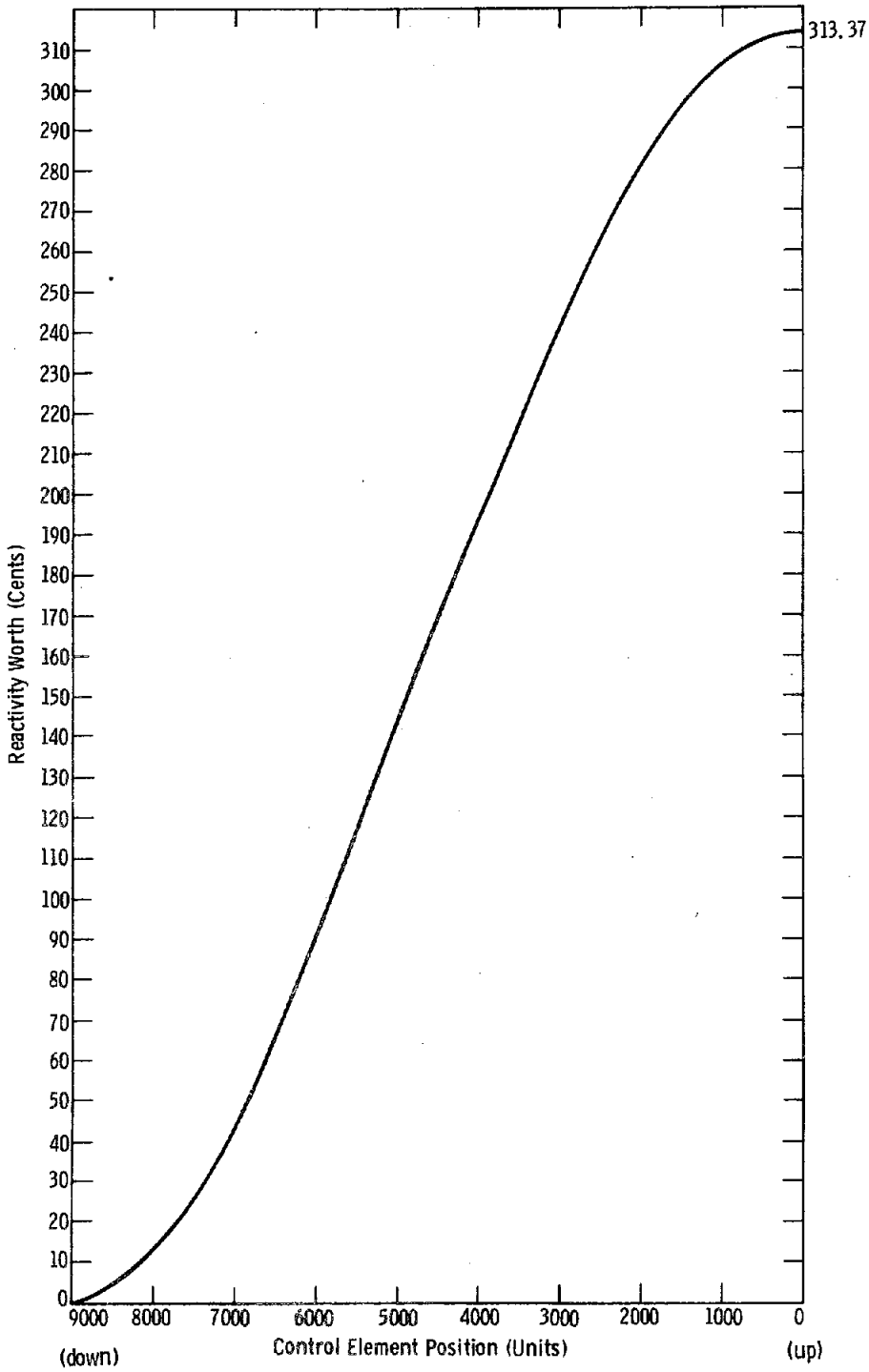

Figure 29. Control Element 3, Integral Worth with Control Elements 1 and 2 Banked

Burst Element Calibration

Burst element reactivity worth is measured in three modes: differential worth, static worth, and dynamic worth. The worth measurements are performed in a manner similar to integral worth determination for a control element, that is, reactivity worth is measured as a function of burst element position. Primary purpose for measuring the worth is to assure that the maximum worth of the burst element does not occur at some position other than when the element is fully inserted. Pulse operations of the reactor are performed with the burst element in only the full-stroke mode, that is, from full-withdrawn to full-inserted. The burst element drive mechanism is not designed to permit pulsing the element to an intermediate position; hence, an integral worth curve is useful only for determining the relationship of maximum reactivity worth and position. The two measurements that are of value for reactor operations are the static worth and dynamic worth measurements. These two measurements provide necessary calibration data for routine operations, and provide the reactor operator with a benchmark for evaluating pulse operations in the super-prompt region.

All reactivity worth measurements for the differential worth (which is then used for an integral worth) and dynamic worth are made with the SPR Control Console Log-N instrumentation systems. The static worth is determined by obtaining two delayed critical (equilibrium) measurements with the burst element in the full-withdrawn and full-inserted positions and evaluating the reactivity change with the control element 1 calibration curve. Burst element worth is shown in Table XVII and Figure 30. The total reactivity worth of the burst element for the integral worth measurement is about 109 cents. It should be noted that this value is not representative of the burst element worth for the reactor in its normal operating configuration because these measurements are made with the shroud removed. Normal operating configuration includes the shroud with the B-10 loaded thimble installed and with these conditions the measured reactivity worths are:

Static worth - 110.90 cents
Dynamic worth - 112.98 cents

TABLE XVII

Burst Element Integral
Worth Calibration

Control Element Position (Units)			Burst Element Position (cm)	Reactivity (cents)	Spacer Worth (cents)	Burst Element Worth (cents)
No. 1	No. 2	No. 3				
3000	4462	4462	0.0 (Down)	-	-	0
3415	↓	↓	2.54	19.11	-0.38	18.73
3634	↓	↓	3.81	29.65	-0.38	29.27
3858	↓	↓	5.08	40.17	-0.38	39.79
4085	↓	↓	6.35	50.99	-0.36	50.63
4295	↓	↓	7.62	61.02	-0.32	60.70
4483	↓	↓	8.89	69.93	-0.20	69.73
4664	↓	↓	10.16	78.50	-0.11	78.39
4835	↓	↓	11.43	86.70	+0.25	86.95
4966	↓	↓	12.70	93.33	+0.61	93.94
5059	↓	↓	13.97	98.06	+0.71	98.77
5148	↓	↓	15.24	102.71	+0.81	103.52
5216	↓	↓	16.51	106.39	+0.76	107.15
5237	↓	↓	17.78	107.52	+0.76	108.28
5250	↓	↓	19.94	108.23	+0.76	108.99

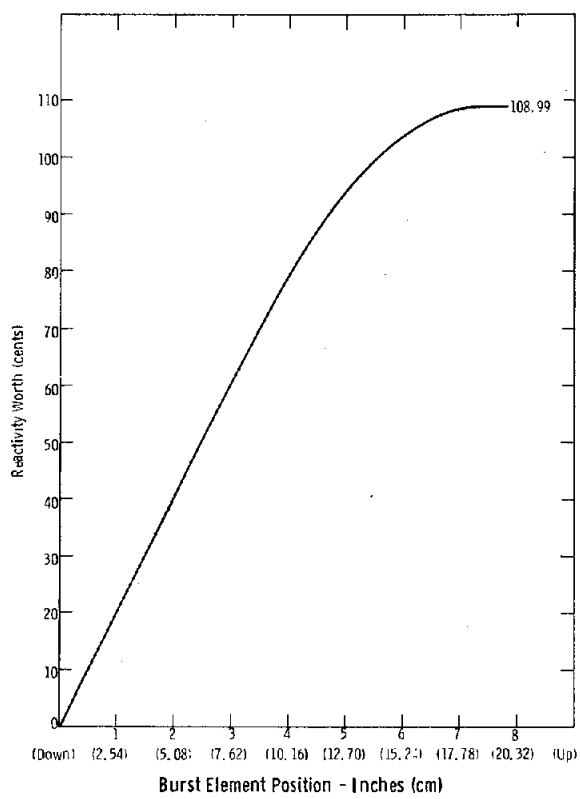

Figure 30. Burst Element Integral Worth Calibration

Reactivity Effects of Various Materials

This part of the zero and low power experiments investigated the reactivity effects of different materials in the experiment cavity and outside the reactor. The materials used are:

1. B-10 ball
2. U-10 w/o Mo 278 g sample
3. SPR II Control rod (U-10 wt % Mo)
4. Lead
5. Steel
6. Polyethylene
7. Copper
8. Aluminum

All reactivity worth measurements are made with the experiment stand in place and the B-10 loaded thimble in the shroud unless otherwise noted.

Experiment Cavity

Reactivity effects of all the materials listed above are shown in Tables XVIII through XXV and Figures 31 through 38. All samples are mounted on the SPR III experiment stand which is equipped with a positioning device that permits both vertical and uni-axis location with respect to the experiment tube (which fits inside the thimble). All plots are shown from the "full down" to the "full up" positions of the vertical drive unit. The common reference position for all samples as a function of sample location is the "full up" position of the experiment stand drive mechanism. With the drive mechanisms at this stop, the drive rod/sample holder is positioned so that the tip of the sample holder is about 0.76 cm down from the top of the uppermost steel ring. Nominal full-stroke travel distance on the experiment stand is 36.52 cm; however, this stroke is inherently reduced by the thickness of the sample if it restricts travel at the bottom of the experiment tube. As an example, the SPR II control rod measurement illustrates the reduction of travel due to sample size.

TABLE XVIII

Reactivity Worth Change of Boron Ball[1] as a Function of Centerline Position in the Experiment Tube

Position (cm)	Control Element 1 Position (units)	Worth[2] (cents)	Reactivity Change (cents)
0 (full down)	4000	185.31	-
1.27	3924	188.78	-3.47
2.54	3718	198.39	-13.08
3.81	3594	204.21	-18.90
5.08	3437	211.95	-26.64
6.35	3258	220.61	-35.30
7.62	3138	226.05	-40.74
8.89	3025	231.18	-45.87
10.16	2954	234.31	-49.00
11.43	2897	236.79	-51.48
12.70	2878	237.62	-52.31
13.97	2897	236.79	-51.48
15.24	2925	235.57	-50.26
16.51	2981	233.14	-47.83
17.78	3075	228.91	-43.60
19.05	3207	222.92	-37.61
20.32	3313	218.06	-32.75
21.59	3467	210.47	-25.16
22.86	3592	204.30	-18.99
24.13	3685	199.93	-14.62
25.40	3790	195.02	-9.71
26.67	3896	190.07	-4.76
27.94	3995	185.54	-0.23
29.21	4060	182.57	+2.74
30.48	4104	180.56	+4.75
31.75	4112	180.20	+5.11
33.02	4096	180.93	+4.38
34.29	4048	183.12	+2.19
35.56	4008	184.95	+0.36
36.83	3966	186.87	-1.56

1. Boron ball 4.76 cm diameter.

2. Worth as determined by DC measurement with control element 1.

TABLE XIX

Reactivity Worth Change of a U-10 Wt % Mo Sample (278 g) as a Function of Centerline Position in the Experiment Tube

Position (cm)	Control Element 1 Position (units)	Worth[1] (cents)	Reactivity Change (cents)
0 (full down)	4000	185.31	-
1.27	3995	185.54	-0.23
2.54	3967	186.82	-1.51
3.81	3953	187.46	-2.15
5.08	3026	188.69	-3.38
6.35	3905	189.65	-4.34
7.62	3893	190.21	-4.90
8.89	3891	190.30	-4.99
10.16	3886	190.53	-5.22
11.43	3886	190.53	-5.22
12.70	3888	190.44	-5.13
13.97	3898	189.97	-4.66
15.24	3904	189.70	-4.39
16.51	3920	188.97	-3.66
17.78	3940	188.05	-2.74
19.05	3960	187.14	-1.83
20.32	3977	186.36	-1.05
21.59	3993	185.63	-0.32
22.86	4004	185.15	+0.18
24.13	4006	185.04	+0.27
25.40	4005	185.08	+0.23
26.67	4000	185.31	0
27.94	3988	185.86	-0.55
29.21	3966	186.87	-1.56
30.48	3935	188.28	-2.97
31.75	3905	189.65	-4.34
33.02	3870	191.28	-5.97
34.29	3831	193.11	-7.80
35.56	3798	194.65	-9.34
36.83	3777	195.63	-10.32

1. Worth as determined by DC measurement with control element 1.

TABLE XX

Relative Reactivity Worth of SPR II Control Rod as a Function of Position on Centerline of Experiment Tube with Shroud in Place

Sample Position (cm)	Control Element 1 Position (units)	Worth[1] (cents)	Reactivity Change (cents)
0 (full down)	4000	185.31	-
1.27	4030	183.94	+1.37
2.54	4052	182.94	+2.37
3.81	4053	182.89	+2.42
5.08	4045	183.26	+2.05
6.35	4030	183.94	+1.37
7.62	4010	184.86	+0.45
8.89	3980	186.23	-0.92
10.16	3964	186.96	-1.65
11.43	3930	188.51	-3.20
12.70	3884	190.64	-5.33
13.97	3844	192.50	-7.19
15.24	3805	194.32	-9.01
16.51	3757	196.57	-11.26
17.78	3688	199.79	-14.48
19.05	3647	201.71	-16.40
20.32	3587	204.55	-19.24

1. Worth as determined with control element 1 to obtain a DC measurement.

TABLE XXI

Reactivity Worth Change of a Lead Sample[1] as a Function of Centerline Position in the Experiment Tube

Sample Position (cm)	Control Element Positions No. 1	No. 2	No. 3	Worth[2] (cents)	Reactivity Change (cents)
0 (full down)	4500	6458	6458	165.65	-
2.54	3778			200.09	-34.34
3.81	3274			224.08	-58.33
5.08	2813			244.44	-78.69
6.35	2333			263.93	-98.18
7.62	1794			282.68	-116.93
8.89	1187			297.73	-131.98
10.16	0682			305.62	-139.87
11.43	0		6433	310.06	-144.31
12.70	0		6397	311.72	-145.97
13.97	0		6416	310.84	-145.09
15.24	0384		6458	308.14	-142.39
16.51	0843			303.74	-137.99
17.78	1450			291.89	-126.14
19.05	1703			285.19	-119.44
20.32	2045			274.59	-108.84
21.59	2418			260.65	-94.90
22.86	2806			244.73	-78.98
24.13	3182			228.25	-62.50
25.40	3476			214.43	-48.68
26.67	3757			201.08	-35.33
27.94	4072			186.13	-20.38
29.21	4290			175.72	-9.97
30.48	4388			171.07	-5.32
31.75	4317			174.44	-8.69
34.04	3804			198.87	-33.12

1. Lead sample is a disc 16.76 cm diameter x 2.54 cm.

2. Total worth of system measured from full down position.

TABLE XXII

Reactivity Worth Change of a Steel Sample[1] as a Function of Centerline Position in the Experiment Tube

Sample Position (cm)	Control Element Positions No. 1	No. 2	No. 3	Worth[2] (cents)	Reactivity Change (cents)
0 (full down)	4500	6603	6603	287.98	-
2.54	3750			323.64	-35.66
3.81	3213			349.07	-61.09
5.08	2705			371.26	-83.28
6.35	2171			392.33	-104.35
7.62	1538			411.95	-123.97
8.89	0586			428.94	-140.96
10.16	0		6447	438.33	-150.35
11.43	0		6331	443.69	-155.71
12.70	0		6287	445.79	-157.81
13.97	0		6305	444.89	-156.91
15.24	0		6358	442.44	-154.46
16.51	0		6448	438.29	-150.31
17.78	0842		6603	425.99	-138.01
19.05	1262			418.33	-130.35
20.32	1732			406.62	-118.64
21.59	2222			390.39	-102.41
22.86	2664			372.93	-84.95
24.13	3079			355.14	-67.16
25.40	3419			339.40	-51.42
26.67	3728			324.67	-36.69
27.94	4067			308.60	-20.62
29.21	4293			297.81	-9.83
30.48	4396			292.92	-4.94
31.75	4299			297.53	-9.55
34.04	3737			324.25	-36.27

1. Steel sample is a disc 16.76 cm diameter x 2.54 cm.

2. Total worth of system measured from full down position.

TABLE XXIII

Reactivity Worth Change of Polyethylene Sample[1] as a Function of Position in the Experiment Tube

Sample Position (cm)	Control Element 1 Position (units)		Reactivity (cents)			
	Thimble	No Thimble	Worth[2]	Change[3]	Worth	Change
0 (full down)	7839	9000	16.08	0	0	0
1.27	7511	9000	24.30	-8.22	0	0
2.54	6622	8125	56.10	-40.02	10.92	-10.92
3.81	5735	7381	98.81	-82.73	27.92	-27.92
5.08	5021	6902	135.95	-119.87	44.63	-44.63
6.35	4229	6502	174.78	-158.70	61.23	-61.23
7.62	3570	6236	205.39	-189.31	73.91	-73.91
8.89	2936	6029	235.09	-219.01	83.99	-83.99
10.16	2549	5960	251.57	-235.49	87.36	-87.36
11.43	2266	5987	262.66	-246.58	86.04	-86.04
12.70	2253	6025	263.14	-247.06	84.18	-84.18
13.97	2330	6085	260.29	-244.21	81.25	-81.25
15.24	2515	6137	252.96	-236.88	78.71	-78.71
16.51	2839	6184	239.31	-223.23	76.41	-76.41
17.78	3175	6228	224.37	-208.29	74.29	-74.29
19.05	3703	6294	199.09	-183.01	71.15	-71.15
20.32	4184	6364	176.91	-160.83	67.81	-67.81
21.59	4581	6442	157.82	-141.74	64.09	-64.09
22.86	5025	6563	135.75	-119.67	58.63	-58.63
24.13	5506	6736	110.80	-94.72	51.23	-51.23
25.40	5996	6938	85.60	-69.52	43.26	-43.26
26.67	6505	7165	61.11	-45.03	35.00	-35.00
27.94	7005	7252	40.73	-24.65	28.87	-28.87
29.21	7609	7508	21.64	-5.56	24.38	-24.38
30.48	8341	7503	8.22	+7.86	24.51	-24.51
31.75	8751	7120	3.11	+12.97	36.47	-36.47
33.02	8151	6546	10.60	+5.48	59.35	-59.35
34.29	7565	5975	22.83	-6.75	86.62	-86.62
35.56	7402	5804	27.25	-11.17	95.25	-95.25

1. Polyethylene sample is 16.76 cm diameter x 2.54 cm thick mounted in horizontal plane.

2. DC worth of control element 1.

3. Relative worth of incremental change in position. To obtain absolute change subtract these values from 172.38 for the B-10 thimble case and 358.49 for the no-thimble case; these DC free field values include worth of experiment stand (+44 cents).

TABLE XXIV

Reactivity Worth Change of a Copper Sample[1] as a Function of Centerline Position in the Experiment Tube

Sample Position (cm)	Control Element Positions No. 1	No. 2	No. 3	Worth[2] (cents)	Reactivity Change (cents)
0 (full down)	5000	6690	6690	255.87	-
2.54	4104			299.03	-43.16
3.81	3428			331.17	-75.30
5.08	2798			359.50	-103.63
6.35	2146			385.49	-129.62
7.62	1269			410.37	-154.50
8.89	0		6454	434.08	-178.21
10.16	0		6167	448.02	-192.15
11.43	0		6006	456.28	-200.41
12.70	0		5939	459.85	-203.98
13.97	0		5961	458.68	-202.81
15.24	0		6025	455.31	-199.44
16.51	0		6141	449.35	-193.48
17.78	0		6442	434.63	-178.76
19.05	0		6624	426.27	-170.40
20.32	1298		6690	409.72	-153.85
21.59	2053			388.76	-132.89
22.86	2665			365.09	-109.22
24.13	3201			341.81	-85.94
25.40	3623			321.81	-65.94
26.67	4028			302.66	-46.79
27.94	4473			281.46	-25.59
29.21	4777			267.08	-11.21
30.48	4950			258.40	-2.53
31.75	4883			261.79	-5.92
34.04	4245			292.29	-36.42

1. Copper sample is a disc 16.76 cm diameter x 2.54 cm.

2. Total worth of system measured from full down position.

TABLE XXV

Reactivity Worth Change of an Aluminum Sample[1] as a Function of Centerline Position in the Experiment Tube

Sample Position (cm)	Control Element 1 Position (units)	Worth[2] (cents)	Reactivity Change (cents)
0 (full down)	4500	161.65	-
2.54	3800	194.56	-32.91
3.81	3323	217.51	-55.86
5.08	2871	237.92	-76.27
6.35	2439	256.09	-94.44
7.62	1953	273.57	-111.92
8.89	1489	286.93	-125.28
10.16	1192	293.46	-131.81
11.43	0998	296.66	-135.01
12.70	0958	297.32	-135.67
13.97	1046	295.87	-134.22
15.24	1192	293.46	-131.81
16.51	1390	289.12	-127.47
17.78	1770	279.34	-117.82
19.05	1967	273.12	-111.47
20.32	2241	263.59	-101.94
21.59	2564	250.95	-89.30
22.86	2911	236.18	-74.53
24.13	3243	221.29	-59.64
25.40	3519	207.90	-46.25
26.67	3783	195.35	-33.70
27.94	4074	181.93	-20.28
29.21	4278	172.40	-10.75
30.48	4368	168.04	-6.39
31.75	4298	171.43	-9.78
34.04	3785	195.26	-33.61

1. Aluminum sample is 16.76 cm diameter x 2.54 cm.

2. Worth as determined by DC measurement with control element 1.

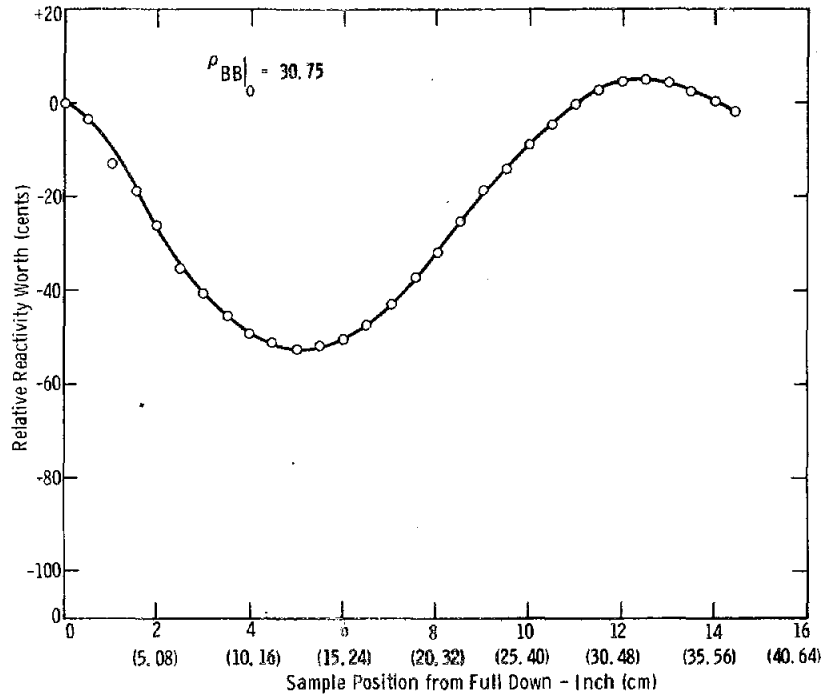

Figure 31. Reactivity of Boron Ball as a Function of Centerline Position in the Experiment Tube

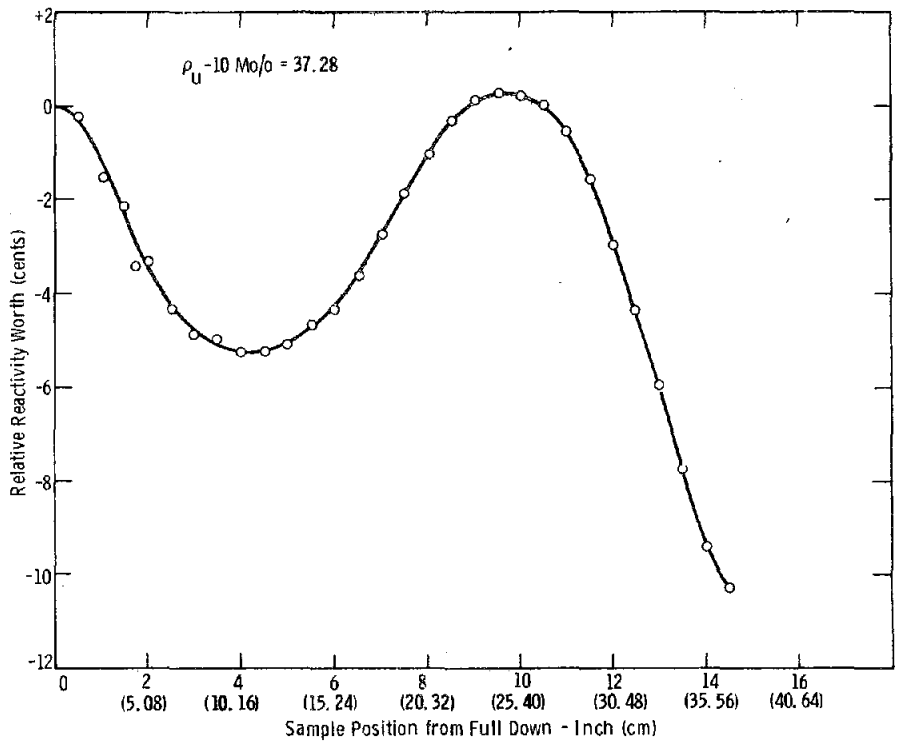

Figure 32. Reactivity of a U-10 Mo 278 gm Sample as a Function of Centerline Position in Experiment Tube with Shroud in Place

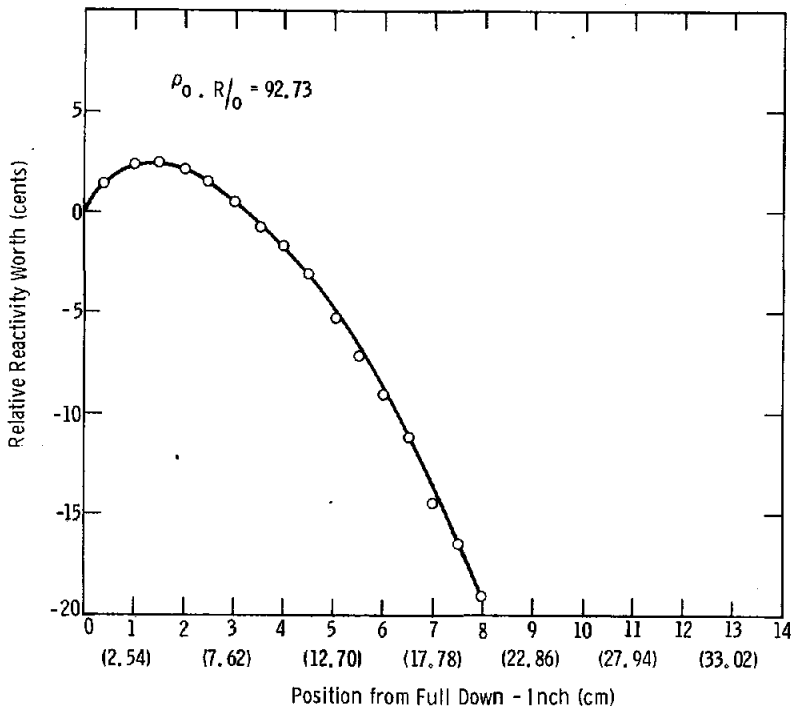

Figure 33. Relative Reactivity Worth of a SPR II Control Rod as a Function of Position in Experiment Tube

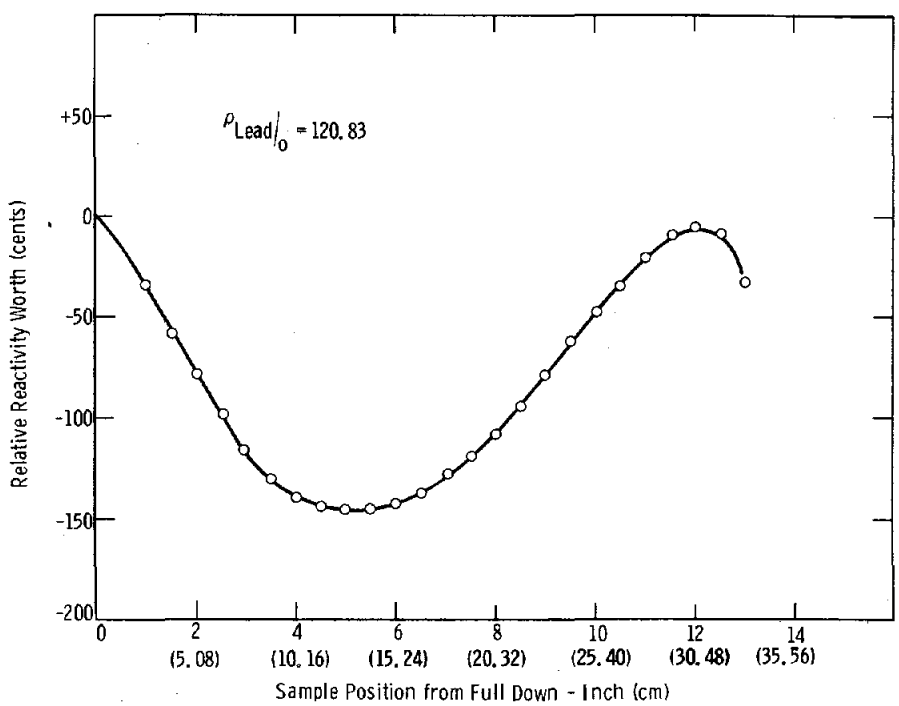

Figure 34. Change in Reactivity Worth of a Lead Sample as a Function of Centerline Position in Experiment Tube

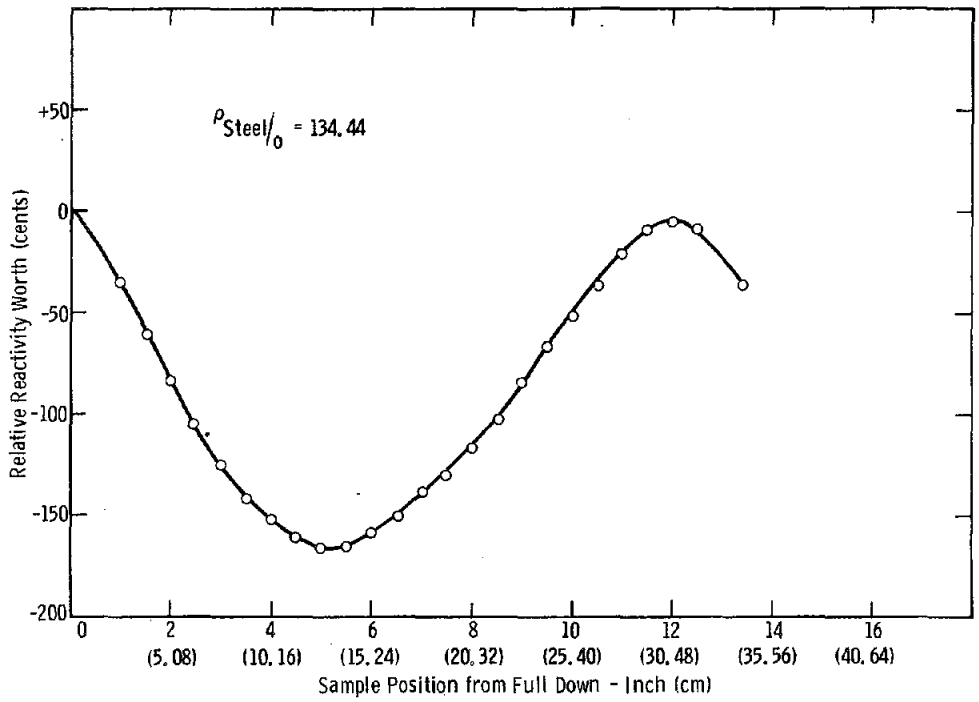

Figure 35. Change in Reactivity Worth of a Steel Sample as a Function of Centerline Position in Experiment Tube

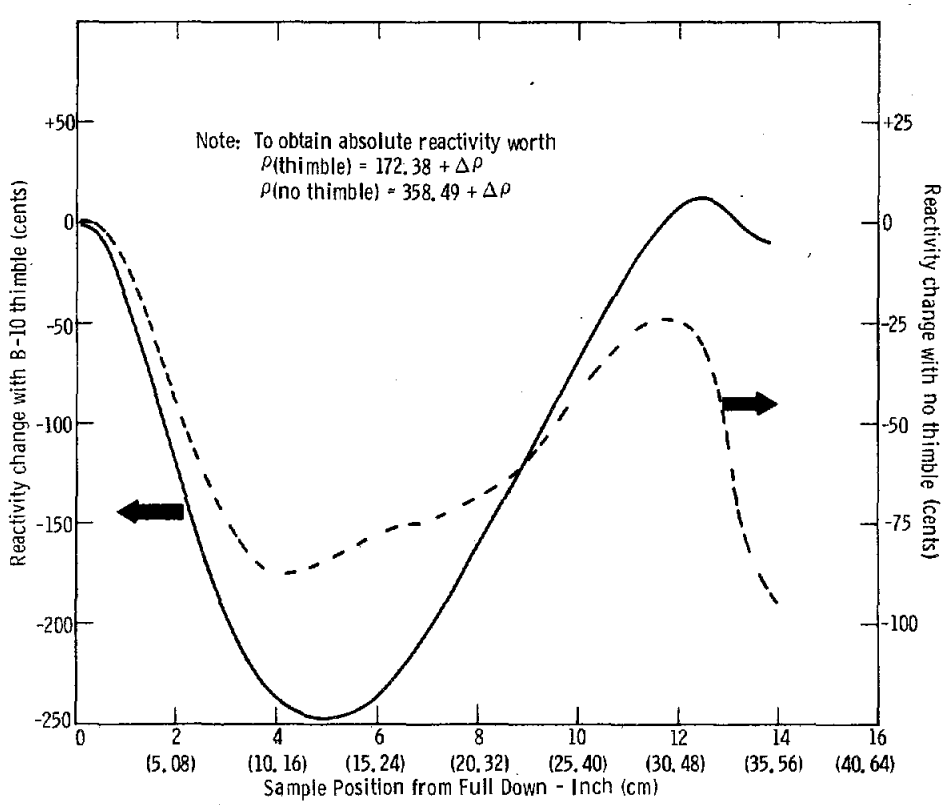

Figure 36. Reactivity Worth of Polyethylene Sample in Experiment Tube with Shroud on

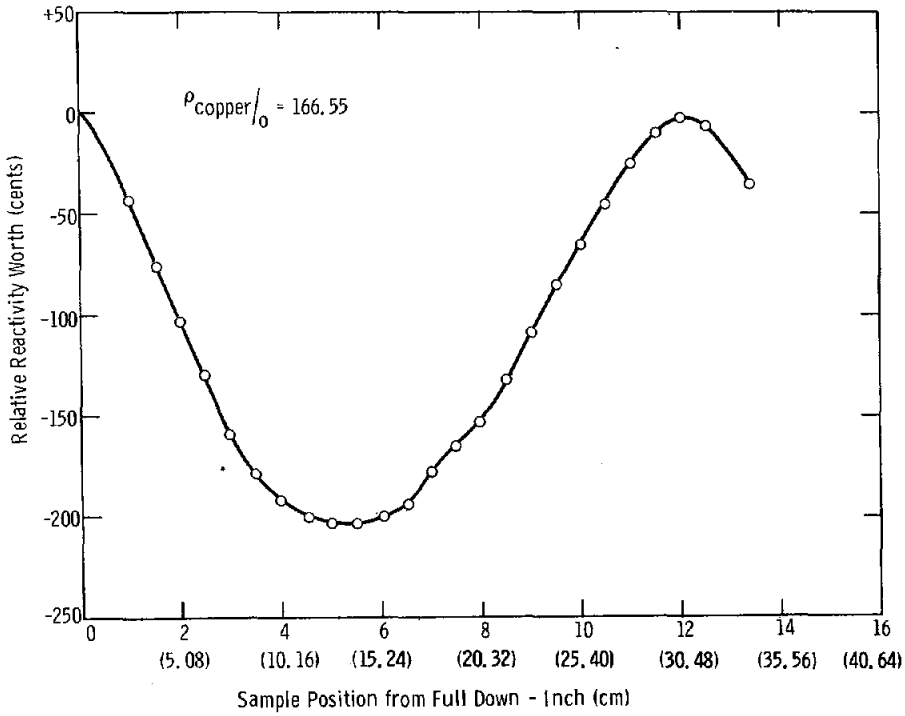

Figure 37. Change in Reactivity Worth of a Copper Sample as a Function of Centerline Position in Experiment Tube

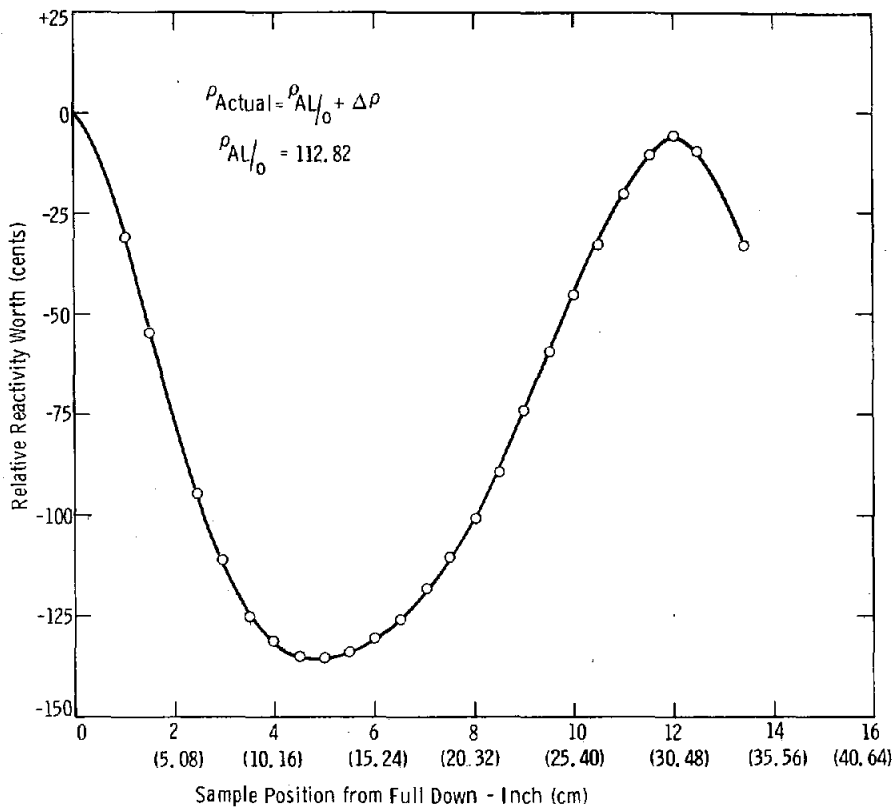

Figure 38. Change in Reactivity Worth of an Aluminum Sample as a Function of Centerline Position in Experiment Tube

Polyethylene Liners in Experiment Tube

The reactivity worth measurements in the foregoing sections use a constant mass in the experiment tube, and only the position relative to the core is changed. The series of measurements presented in this section consist of placing full length (~ 35.6 cm) polyethylene liners into the experiment tube in various geometries to determine relative reactivity effects. The experiment stand is removed for these series of measurements.

Increasing Thickness of Liners -- Polyethylene liners are added sequentially to the experiment tube by placing the first liner adjacent to the inside diameter of the tube and adding successive layers to build up a composite polyethylene liner with a decreasing inside radius. The first thickness is 0.24 cm and resulted in a net reactivity increase of 121.57 cents. The final datum point simply represents the available reactivity to offset the negative worth as it is anticipated that further additions would result in at least no significant change. The B-10 loaded thimble is in place in the shroud for these measurements. Results are shown in Table XXVI and Figure 39.

TABLE XXVI

Polyethylene Cylinder Worth as a Function of Thickness Inside the Experiment Tube

Thickness (cm)	Total Control Element Reactivity Worth (cents)	Sample Reactivity Worth (cents)
Base Data	443.98	----
0.24	322.41	+121.57
0.48	268.75	+175.23
0.71	340.83	+103.15
0.95	438.54	+5.44
1.19	565.67	-121.69
1.43	844.79	-400.81

1. As measured inward from an outer radius of 3.29 inches. Inside radius of experiment tube is 3.309 inches.

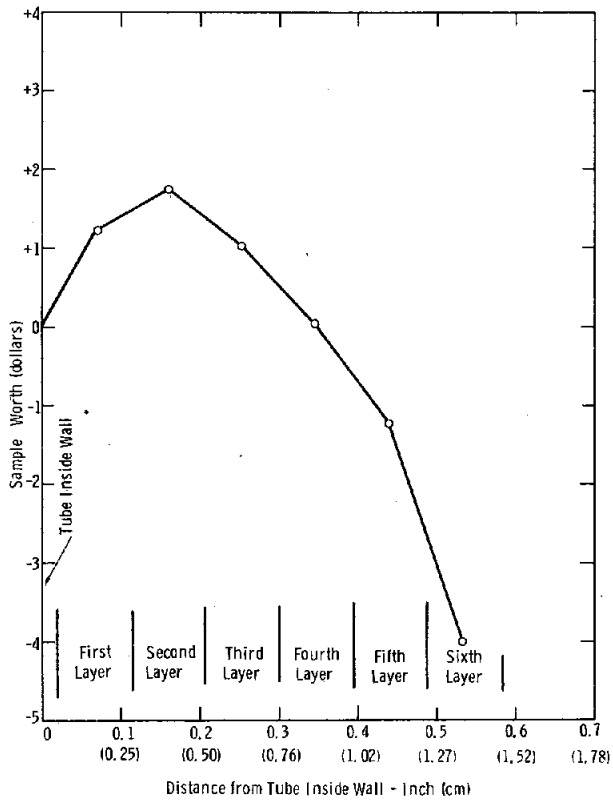

Figure 39. Polyethylene Cylinder Worth as a Function of Thickness in the Experiment Tube

Fixed Location of Single Thickness Liners -- It is necessary to know the reactivity effects on the system of a particular experiment as a function of material and spatial position. This reactivity effect (perturbation) is normally performed on the operational reactor by evaluating the reactivity change determined by delayed critical measurements and comparing to the free-field (unperturbed) condition. Prior to performing these delayed critical measurements, it is desirable to estimate the reactivity effects of the experiment. To do this, some basic guideline values are obtained as described below which (should) result in an envelope of maximum changes due to material and position.

A family of polyethylene liners is used which have been fabricated in such a manner as to nest one inside the other and thereby build up single thicknesses at different places inside the experiment tube. These measurements differ from those given previously in the paragraph on increasing thickness of liners in that only the reactivity worth of one thickness is measured, whereas the other data is based on a continually increasing thickness.

Reactivity measurements are made for each thickness, in some cases two or more nested liners, at its particular fixed location inside the experiment tube. In all measurements, the axial centerline of the liner(s) is coincident with the axial centerline of the experiment tube. Since each liner has a fixed geometry, the spatial location with respect to the core is thereby fixed, and it is this relationship that provides useful guideline reactivity worths for the evaluation of experiment reactivity effects as a function of position inside the experiment tube. Results of measurements are shown in Table XXVII.

TABLE XXVII

Effects of Polyethylene Liners Inside the Experiment Tube as a Function of Position

Ring No.	Radius (cm)	Thickness (cm)	Mass (grams)	Equivalent Surface (cm^2)[1]	Reactivity (cents)	Specific Reactivity[2]
			SINGLE LINER MEASUREMENTS			
8	0.95	0.95	110.00	247.90	+45.33	0.412
7	1.80	0.95	336.61	379.28	+71.90	0.214
6	3.05	1.14	697.56	650.63	+73.91	0.106
5	4.62	1.56	1486.00	1015.16	-55.90	0.038
4	5.78	1.16	1501.68	1377.68	+53.16	0.035
3	6.82	1.03	1616.60	1675.37	+81.30	0.050
2	7.62	0.79	1409.10	1907.84	+147.58	0.105
1	8.36	0.74	1458.00	2110.20	+103.15	0.071
			COMPOSITE LINER THICKNESSES			
8 + 7	1.80	1.89	446.61	251.61	+41.22	0.092
6 + 7	3.05	2.09	1034.17	527.74	-60.05	0.058
6+7+8	3.05	3.04	1144.17	401.87	-113.66	0.099
5 + 6	4.62	2.71	2183.56	860.56	-366.55	0.168
5+6+7	4.62	3.65	2520.17	735.84	-481.27	0.191
5+6+7+8	4.62	4.60	2648.17	614.09	-512.73	0.194
4 + 5	5.78	2.72	2969.68	1162.19	-553.41	0.186
4+5+6	5.78	3.87	3667.24	1010.99	>-1048.07	>0.286
3 + 4	6.82	2.19	3118.28	1517.47	-515.96	0.165
2 + 3	7.62	1.82	3025.70	1776.16	-434.32	0.144

1. Mass divided by density (ρ = 0.938 g/cc) and thickness.

2. Ratio of absolute reactivity divided by the mass of the liner(s).

External Effect of Materials

Two different types of materials, one high-Z (lead) and one low-Z (polyethylene), are placed directly behind the burst element and control elements 2 and 3 outside the shroud to observe the relative effect of these materials on the burst element reactivity worth. The lead is standard 10.2 cm x 20.3 cm x 2.5 cm bricks stacked to form a 20.3 cm high shield 10.2 cm thick. The polyethylene is cut 20.3 cm high and 5.24 cm thick. In all measurements, the sample is located with respect to the core so that the core length reflected is exactly the same relative core length covered by the burst element travel (21.6 cm). Results (Table XXVIII) show that the unperturbed worths measured of 116.61 and 112.44 are not consistent with the true burst element worth given previously in the section on burst element configuration, since the values shown in Table XVII are before the element was modified for the lower worth; however, the relative change is the item of concern and total worth should not have any appreciable effect on these values.

TABLE XXVIII

Effect of Materials Placed Outside the Shroud on Burst Element Worth

Material	Location[1]	Control Elements (units) No. 1	No. 2	No. 3	Burst Element (cents)
None	-	1000	5783	6000	-
		4116	5783	6000	116.61
		3000	5223	5223	-
		5336	5223	5223	112.44
Polyethylene Sheet, 5.24 cm x 20.3 cm	Burst element	3000	5729	5729	-
		5184	5729	5729	104.63
	Control element 2	1000	6778	6000	-
		4074	6778	6000	114.70
		3000	5739	5738	-
		5318	5739	5738	111.48
	Control element 3	1000	6747	6000	-
		4166	6747	6000	118.90
		3000	5759	5759	-
		5385	5759	5759	115.06
Lead bricks, 20.3 cm high	Burst element	3000	5718	5718	-
		5098	5718	5718	100.27
	Control element 2	1000	6702	6000	-
		4151	6702	6000	118.21
		3000	5735	5735	-
		5373	5735	5735	114.42
	Control element 3	1000	6807	6000	-
		4078	6807	6000	114.88
		3000	5744	5745	-
		5318	5744	5745	111.48

1. Sample materials stacked adjacent to shroud directly behind control element or burst element.

Safety Block Reactivity Worth

Integral worth of the safety block as a function of separation distance from the upper core half is shown in Table XXIX and Figure 40. The measured values are obtained by placing shim stock material at the four contact areas between the two core halves and then obtaining a delayed critical configuration with the use of control element 1 to compensate for the reactivity loss. The measurements are concluded at 1.27 cm separation, since the differential rate is of such magnitude that further (meaningful) data cannot be obtained with control element 1 as the compensating reactivity worth. In fact, the last datum point at 1.27 cm is obtained by off-setting control elements 2 and 3 to provide additional reactivity adjustment for control element 1.

TABLE XXIX

Safety Block Calibration Worth of Safety Block as a Function of Separation Distance Between Safety Block and Upper Core Half

Separation (cm)	Reactivity[1] (cents)	Reactivity Change (cents)	Differential (cents/cm)
0.0	121.04	-	-
0.005	122.60	1.56	312
0.010	123.82	2.78	278
0.015	125.09	4.05	270
0.025	127.68	6.64	266
0.047	132.60	11.56	246
0.188	178.51	57.47	306
0.305	199.56	78.52	257
0.635	284.54	168.50	265
1.270	445.34	324.30	255

1. Reactivity determined as a function of control element 1 position.

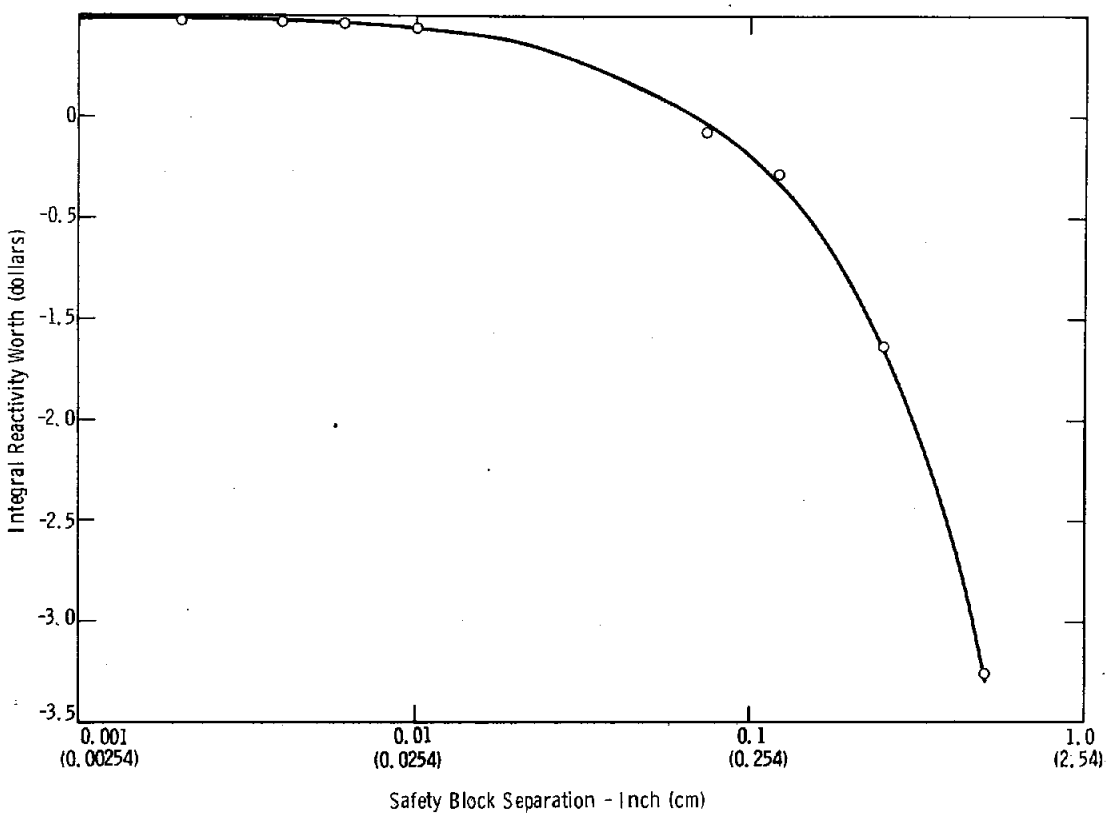

Figure 40. Integral Reactivity Worth, Safety Block and Upper Core Half Separation with no Shroud

Variation of Burst Element Worth

During the initial tests conducted to determine the static worth of the burst element, it was observed that the relative position of materials inside the experimental tube resulted in a change of the burst element reactivity worth. The results of a series of measurements with a polyethylene sample (16.76 cm diameter x 2.54 cm) in the experiment tube are shown Table XXX and Figure 41. The reader will notice that the static worth of the burst element is given as 116.50 cents, whereas the operational static worth given previously is 110.90. The difference is due to a change in physical size of the burst element made after this series of measurements; however, the information of interest is the magnitude of reactivity change which will not be effected to any large extent by this physical change in size. Only the polyethylene material is used to determine the effect of materials and location on the burst element reactivity worth, since the material will have the greatest influence on the system and should thereby encompass the effects of other materials.

TABLE XXX

Effect of Polyethylene Sample[1] on Burst Element Worth as a Function of Centerline Position in Experiment Tube

Sample Position (cm)	Worth[2] (cents)	Reactivity Change (cents)	Differential Worth (cents/inch)
(full down)	116.50	-	-
2.54	116.82	+0.32	0.32
3.81	117.35	+0.85	1.06
5.08	117.46	+0.96	0.22
6.35	117.78	+1.28	0.64
7.62	117.62	+1.12	0.32
8.89	117.51	+1.01	0.22
10.16	116.76	+0.26	1.50
11.43	115.59	-0.91	2.34
12.70	114.26	-2.24	2.66
13.97	112.60	-3.90	3.32
15.24	110.89	-5.61	3.42
16.51	110.06	-6.44	1.66
17.78	108.24	-8.26	3.64
19.05	107.78	-8.72	0.92
20.32	107.22	-9.28	1.12
21.59	107.27	-9.23	0.10
24.13	108.59	-7.91	1.32
25.40	109.71	-6.79	2.24
26.67	111.46	-5.04	3.50
27.94	113.54	-2.96	4.16
29.21	116.21	-0.29	5.34
30.48	118.39	+1.89	4.36
31.75	119.36	+2.86	1.94
34.04	119.09	+2.59	0.30

1. Polyethylene sample is 16.76 cm diameter x 2.54 cm mounted in horizontal plane.

2. Worth as determined by using static worth of burst element.

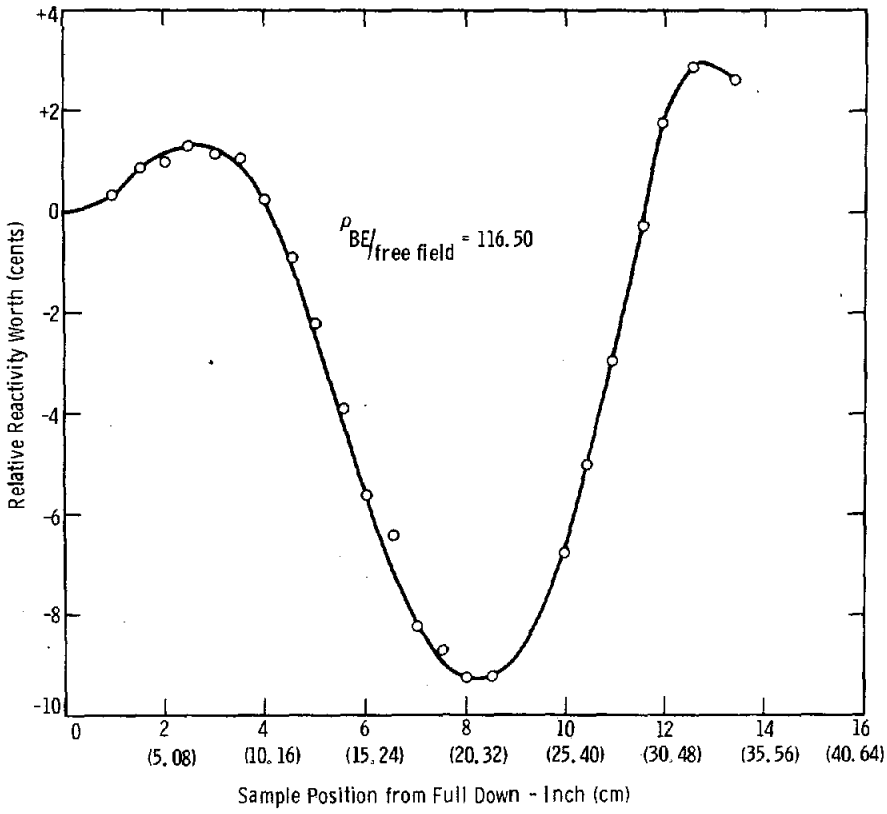

Figure 41. Relative Change in Burst Element Worth as a Function of Centerline Position in Experiment Tube of a Polyethylene Sample

CHAPTER IV

CONCLUSIONS

Primary characteristics of the SPR III for both design and experimental values are summarized in Table XXXI. Experimental results are those parameters measured for a 16-fuel-plate core, whereas the design values are based on a full 18-fuel-plate core. The difference in critical mass is 35 kg which is the largest deviation between design and experimental values; however, it should be recognized that the reactor actually achieved critical with 258 kg for a real difference of only 5 kg. The fuel mass is deliberately lowered to provide for adequate control margin, that is, system reactivity worth in control elements to accommodate the reactivity worths (either positive or negative) of experiments.

TABLE XXXI

Comparison of Experiment and Design Values

Parameter	Experiment[1]	Design[2]
Control element integral worth	\$3.06 to \$3.13	\$2.90 to \$3.60
Control element differential worth	\$0.13/cm	\$0.12/cm
Burst element worth	\$1.13	\$1.26
Safety block worth at 2.54 cm separation	> -\$6.50[3]	- \$7.00
Shroud/thimble worth	+\$1.02	+ \$0.97
Critical mass	228 kg (258 kg)[4]	263 kg
Excess reactivity	\$5.63 (~ \$7.00)[4]	~ \$6.00
Total reactivity	\$10.48	~ \$9.96[5]

1. Based on 16 fuel plate core with shroud in place.
2. Calculated for an 18-fuel-plate core. Actual operational core size fixed at 16 fuel plates.
3. Based on differential measured at 1.27 cm separation.
4. Actual critical assembly achieved with 258 kg.
5. Based on the 2.54-cm-thick Cu reflector element.

Other measured characteristics are summarized in Figures 42 through 45. Figure 42 shows both a typical differential worth and integral worth plot for a control element. The maximum observed different worth is about 13¢/cm (33¢/inch) which is in good agreement with the calculated value at 12¢/cm. The integral worths are also in good agreement; however, the physical shape of the control element (see drawing T24058 in Appendix B) was changed slightly by removing the beveled outer face and machining the ends so that the end face is perpendicular to the tangent. Removal of reflector material was continued until the integral worth was reduced to the above (Table XXXI) values. Original observed subcritical measurements indicated that the control element worth to be in the range $3.60 to $4.75, which was judged too high; hence, the decision to remove material. Figure 43 shows a composite plot of the reactivity worth of various materials (see Chapter III for details) as a function of experiment cavity location. The plotted values are normalized to the reactivity change relative to the empty cavity. All materials exhibit similar behavior and are characterized by an absolute reactivity swing of about $2.60, except for the polyethylene without the B-10 loaded thimble in place. All materials observed in the experiments cavity can be characterized by strong positive peaking at both ends of the cavity, indicating good reflection. Figures 44 and 45 show reactivity worth of two distinct geometries when using polyethylene cylinders in the experiment cavity. The main characteristic observed is a strong negative worth effect which can be attributed to the moderating effect of polyethylene, coupled with the boron in the B-10 loaded thimble.

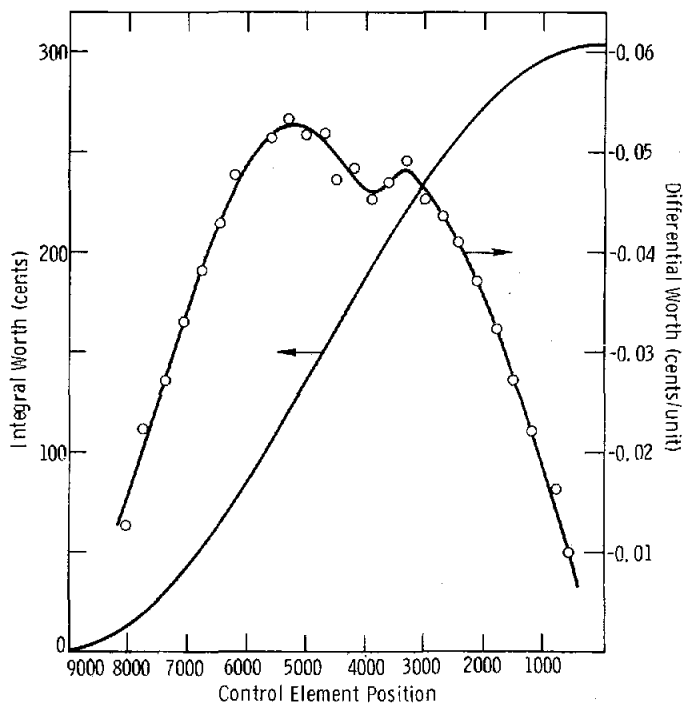

Figure 42. Integral and Differential and Control Element Calibration Curves

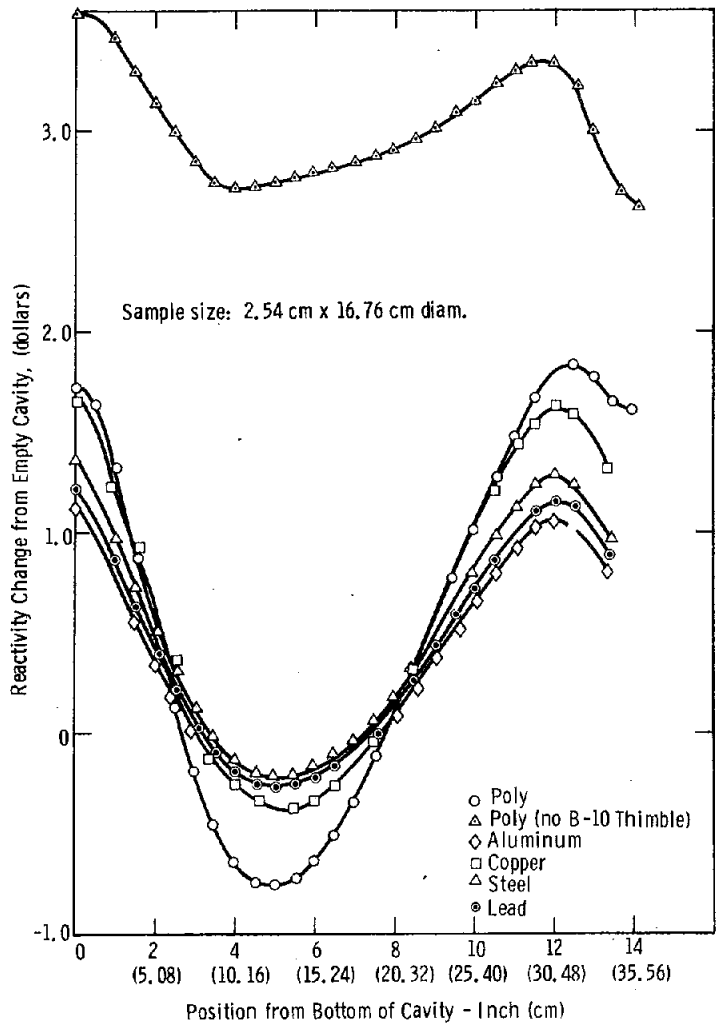

Figure 43. Reactivity Measurements in Central Cavity

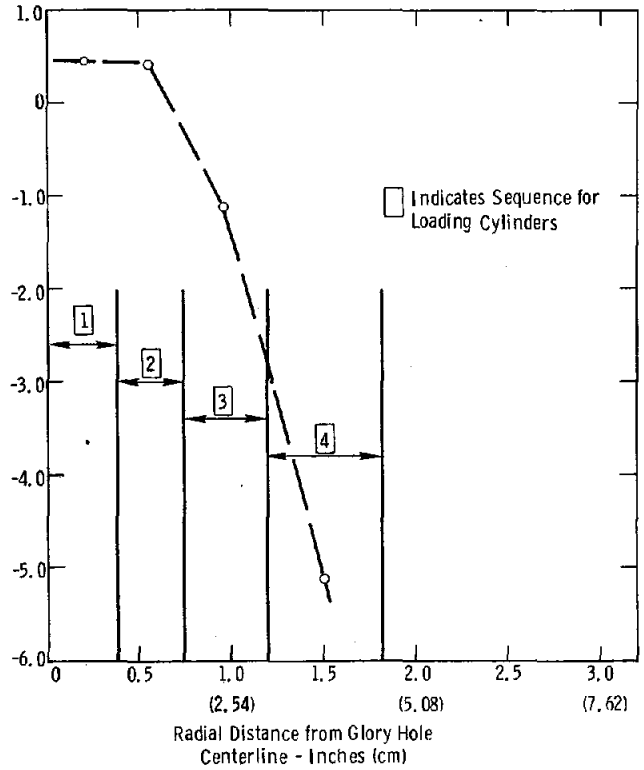

Figure 44. Reactivity Effect of Nested Polyethylene Cylinders at Center of SPR III Glory Hole

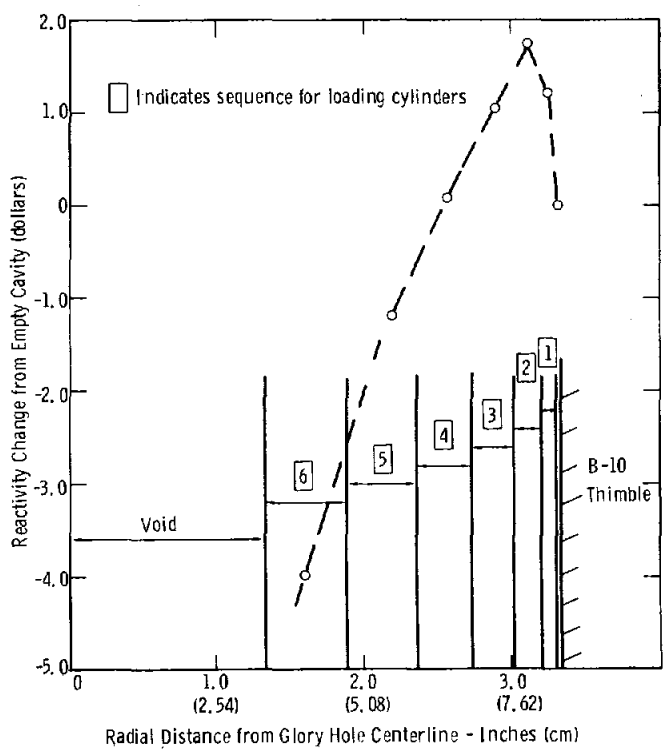

Figure 45. Reactivity Effect of Nested Polyethylene Cylinders in SPR III Glory Hole

References

1. L. L. Bonzon, B. F. Estes, J. S. Philbin, J. A. Reuscher, Sandia Pulsed Reactor III (SPR III) Final Safety Analysis Report, SLA-74-0349, Sandia Laboratories, Albuquerque, New Mexico, October 1974.

2. L. L. Bonzon, J. S. Philbin, SPR II System Parameters, SC-RR 72-484, Sandia Laboratories, Albuquerque, New Mexico, December 1972.

3. Glasstone and Sesonske, Nuclear Reactor Engineering, Van Nostrand, Princeton, New Jersey, 1963.

4. K. G. Hoge, Some Mechanical Properties of Uranium 10-wt Percent Molybdenum Under Dynamic Tension Loads, UCRL-12357, February 1965.

5. F. Reinecker, W. H. Morsen, Uranium-Molybdenum Alloy for use in a Prompt-Burst Reactor, ASME Paper No. 65-Met-7.

6. R. J. Van Thyne, D. J. McPherson, "Transformation Kinetics of Uranium-Molybdenum Alloys," Trans. Am. Soc. Metals, 49, 598 (1957).

7. H. A. Saller, F. A. Rough, A. A. Bauer, Transformation Kinetics of Uranium-Molybdenum Alloys, BMI-957, October 21, 1954.

8. Konobeevsky, Pravdyuk, Kutaitsev, Proceedings of the International Conference on Peaceful Uses of Atomic Energy, 7, pp. 433-440, 1956.

9. M. L. Bleiberg, L. J. Jones, B. Lustman, "Phase Changes in Pile-Irradiated Uranium-Base Alloys," Journal of Applied Physics, 27, pp. 1270-1283, November 1956.

10. T. R. Schmidt, Sandia Pulsed Reactor III (SPR III): Neutron Physics Core Calculations, SLA-73-0876, Sandia Laboratories, Albuquerque, New Mexico, January 1974.

11. T. R. Schmidt, Fast Burst Reactor Neutron Transport Calculations, SLA-73-0140, Sandia Laboratories, Albuquerque, New Mexico, September 1973.

12. G. R. Keepin, Physics of Nuclear Kinetics, Addison-Wesley Publishing Co., Inc., Reading, Massachusetts, pp. 223-225, 1965.

APPENDIX A

TEST PROGRAM PROCEDURES

PART I

SPR III

Test Series Proposal No. 1
Initial Critical Experiment

Purpose

The purpose of the initial SPR III critical experiment is to carefully assemble the reactor for the first time in order to establish the critical configuration of the core. This experiment will also verify the design neutron physics calculations.

General Procedures

The Integrated Plant Test will be completed prior to the start of the critical experiment. The SPR III stand with mock-up fuel rings will be placed on the elevator platform and connected to the SPR control system. The proper functioning of all drive mechanisms will be verified as a part of the Integrated Plant Test.

The critical experiment will be performed by adding the fuel elements in single unit increments and by observing the increase in neutron count rate due to multiplied neutrons from a source at the center of the assembly. The reciprocal multiplication technique (1/M) will be used to determine the critical configuration of the core for each fuel addition. The assembly procedures will follow ANS-STD 1-1967, "A Code of Good Practices for the Performance of Critical Experiments." Hand-stacking of fuel will be allowed up to a multiplication of 10; this practice is used at other laboratories.

In addition to the neutron multiplication measurements for the critical determination, an evaluation of the reactivity worth of the pit will be conducted. A neutron detector will be attached to the reactor stand, and at several points in the loading the stand will be lowered into the pit and the shield door closed. A source multiplication measurement will be taken and compared with results for the case with the reactor fully raised out of the pit.

Cylindrical aluminum spacers have been fabricated to be used during the experiment to take the place of fuel plates in the core. These spacers allow the structural components of the core (support rings and bolts) to remain in the same location for each fuel plate loading.

Responsibility

The responsibility for the safe conduct of this experiment rests with the supervisor of the Reactor Source Applications Division. The procedures will be reviewed and evaluated by the SPR Committee. This test series proposed will be audited by Quality Assurance personnel.

General Regulations

- No more than two people will be allowed within 12 inches of the fuel assembly during the fuel loading procedure.
- No fuel component will be removed from its container or the vault until it is ready to be assembled. Only one fuel component will be handled at any given time, except when the safety block is moved from the bench to the reactor stand.
- After assembly of the safety block and its placement on the reactor stand with the four control elements, no manipulation of the control elements or safety block will be permitted while there are persons in the kiva until it has been demonstrated to be safe to do so.
- Addition of fuel components is to be performed slowly, and personnel are not to position themselves between the fuel assembly and the neutron detector for the audible counter.
- In the event the assembly cannot be completed in one operation, unassembled fuel components shall be stored in a geometrically safe configuration in the reactor building vault or in the kiva. Unassembled components may be stored in a plane array with a spacing of 30 or more inches between them.

Assembly Hardware

A SPR III Reactor Stand - The stand will be mounted on the elevator in the SPR kiva.

A Neutron Source with an Intensity of 10^6 n/sec - The source will be located in such a position that it will be shielded from the neutron detectors by the reactor fuel.

A BF_3 Neutron Detector - This detector will be equipped with a count-rate meter, an audible counter, and a scaler, and will serve as the principal monitoring device in the kiva during assembly operations. The detector will be installed where it will be shielded from the source by the reactor fuel. This detector is to be fixed in place and is not to be moved until the reactor is fully assembled.

SPR Start-up Instrumentation - This equipment will be used as a continuous check on the neutron multiplication. The period measuring instrument will be set to detect the fission chamber output in order to obtain useful data in the event of an excursion. The count-rate meters will be operated in the linear mode for greatest sensitivity.

Additional Neutron Detectors - At least four additional neutron detection channels will be available to monitor neutron multiplication. The detectors will be positioned at various distances from the assembly. BF_3 detectors will be surrounded with polyethylene to improve counting efficiency. The scalers and timers for these detection channels will be located in the instrument shack. The neutron detector placed in the pit will not use a polyethylene geometry.

Tools and Handling Gear - All necessary tools and handling gear will be made accessible before loading begins.

Personal Requirements

- The Critical Assembly Coordinator will be responsible for the interpretation of the data taken during the experiment and will coordinate all activities during the critical experiment.
- A Health Physicist or Health Physics Monitor will be required in the kiva during all fuel-handling activities.
- The reactor console will be attended by a SPR Supervisor during all loading operations. Both an Operator and a Supervisor will be present in the control room during any manipulation of the controls.
- A Fuel Control Officer will be responsible for the control of fuel during loading operations and can assist in fuel loading.
- The Loading Supervisor will direct all fuel-loading operations.
- One or more Loaders and Assemblers will remove the fuel from its containers and assemble each component on the reactor stand as directed by the Loading Supervisor.
- One or more Data Recorders will be located in the instrument shack to operate the additional neutron detectors.
- There will be an independent analysis of the multiplication data by at least three persons after each step in the operation. These individuals must concur before any step in the loading sequence can be undertaken.

Core Configuration

The final SPR III core configuration is given in Figure A1; the identifier on the plates indicates its location in the core. The nominal plate masses are given in Table A-1. The serial numbers of the plates and actual masses will be supplied before the start of the experiment.

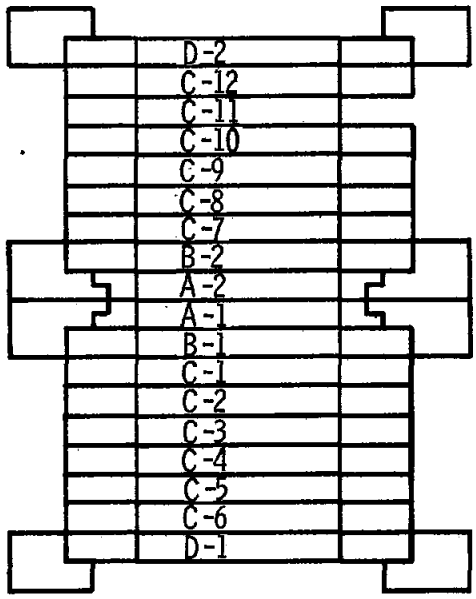

Figure A1. Final Configuration

TABLE A-1

SPR III Fuel Plate Masses

Plate Position		Mass (kg)	
D-2	A-1	15.4	6.8
C-12	B-1	15.4	15.0
C-11	C-1	15.4	15.4
C-10	C-2	15.4	15.4
C-9	C-3	15.4	15.4
C-8	C-4	15.4	15.4
C-7	C-5	15.4	15.4
B-2	C-6	15.0	15.4
A-2	D-1	6.8	15.5
		Total	259.2

Detailed Procedures

A theoretical 1/M curve is given in Figure A2; these results were obtained with TWOTRAN for several steps in the critical assembly loading. The neutron multiplication measurements will be taken with the lower core half in the fully raised position. The detailed procedures are as follows:

1. The Integrated Plant Test will be completed with the mockup core on the reactor stand. All control element drives will be checked for proper operation.
2. Remove the mockup core from the stand, and remove the control and pulse element drive mechanisms.
3. Take background count rates on all detectors with the neutron source removed from the reactor stand.
4. Position a neutron source with a strength of 10^6 neut/sec at the center of the core and obtain reference counts (M=1) with the elevator fully up.
5. Lower the stand into the pit and obtain the M=1 count rate with the shield door closed.
6. The actual critical assembly begins with this step. Position plate A-2 as shown in Figure A3, replace the neutron source at the center and obtain count rates.
7. Position plate B-2 as shown in Figure A4 and obtain count rates.
8. Position plate C-7 as shown in Figure A5 and obtain count rates.
9. Disassemble the three plates from the reactor stand, reassemble them on the work bench as a modified safety block, place this lower half assembly on the safety block spider. Load plate A-1 in the upper half as shown in Figure A6 and obtain count rates.
10. Lower the reactor stand into the pit, close the shield door, and obtain count rates on the pit detector. (Four plates loaded.)
11. Raise elevator to full-up position, position plate B-1 as shown in Figure A7, and obtain count rates.
12. Position plate C-1 as shown in Figure A8 and obtain count rates.
13. Position plate C-2 as shown in Figure A9 and obtain count rates.
14. Lower the reactor stand into the pit, close the shield door and obtain count rates on the pit detector. (Seven plates loaded.)
15. Raise elevator to full up position, position plate C-3 plate as shown in Figure A10, and obtain count rates.

16. Position plate C-4 as shown in Figure A11 and obtain count rates.

17. Position the plate C-5 as shown in Figure A12 and obtain count rates.

18. Lower the reactor stand into the pit, close the shield door, and obtain count rates on the pit detector. (Ten plates loaded.)

19. Raise the elevator to the full-up position, position plate C-6 as shown in Figure A13, and obtain count rates.

20. Position plate D-1 as shown in Figure A14 and obtain count rates.

21. Disassemble all 12 plates and place them in storage containers or on the kiva floor with at least 30 inches between plates.

22. Assemble plates A-1, B-1, C-1, C-2, C-3, C-4, C-5, C-6, and D-1 as the safety block on the work bench. Install thermocouples in the safety block and position it on the spider. Bolt safety block to spider.

23. Install pulse element and three control elements.

24. Position plate A-2 as shown in Figure A15 and obtain count rates. Insert thermocouple through support ring into plate.

25. Position plate B-2 as shown in Figure A16 and obtain count rates.

26. Position plate C-7 as shown in Figure A17 and obtain count rates.

27. Position plate C-8 as shown in Figure A18 and obtain count rates.

28. Lower the reactor stand into the pit, close the shield door, and obtain count rates on the pit detectors. (Thirteen plates loaded.)

29. Raise elevator to the full-up position, position plate C-9 as shown in Figure A19, and obtain count rates.

30. Position plate C-10 as shown in Figure A20 and obtain count rates.

31. Position plate C-11 as shown in Figure A21 and obtain count rates.

32. Lower the reactor stand into the pit. close the shield door, and obtain count rates on the pit detector. (Sixteen plates loaded.)

33. Raise the elevator to the full up position, position plate C-12 as shown in Figure A22, and obtain count rates.

34. Position plate D-2 as shown in Figure A23 and obtain count rates.

35. Lower the reactor stand into the pit, close the shield door, and obtain count rates on the pit detector. (Eighteen plates loaded.)

36. Raise elevator to the full-up position. The neutron multiplication measurements are complete since all the fuel elements will have been loaded.

37. Raise control elements one at a time until criticality is achieved. Do not insert an element more than 1000 divisions without pausing to observe the time behavior of the neutron level.

38. If a critical configuration is achieved, scram reactor and remove source from the center of the core.

39. Transfer source to source tube so remote positioning is possible.

40. Run d. c. and drop source to confirm critical.

41. If critical is achieved, the design calculations are confirmed and the SPR III startup should proceed to the low power testing.

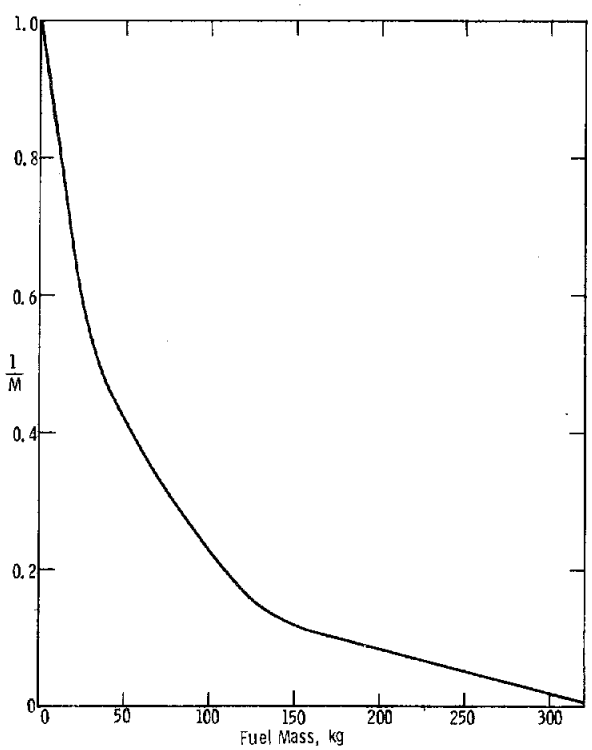

Figure A2.

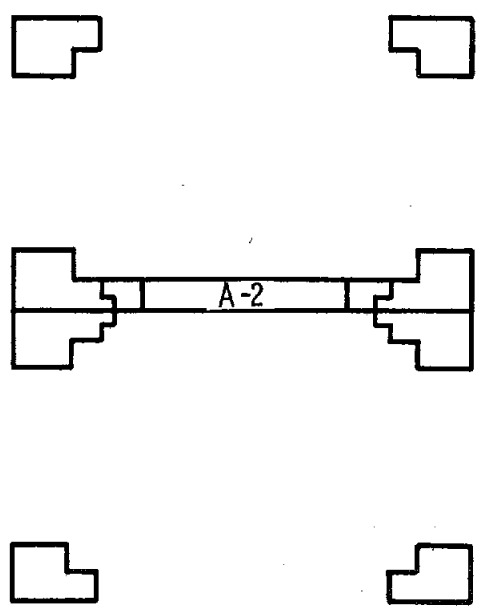

Figure A3.

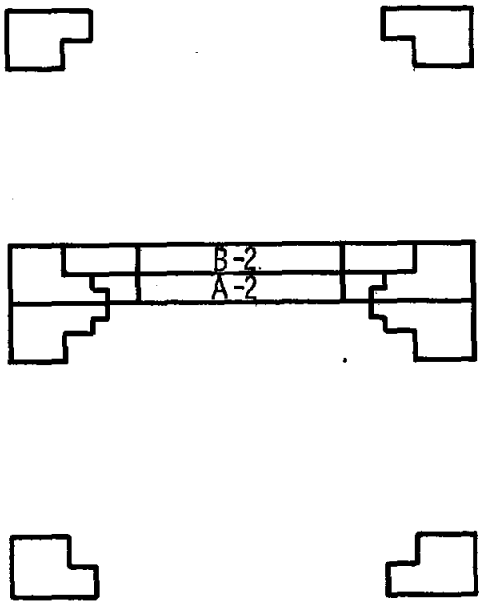

Figure 4.

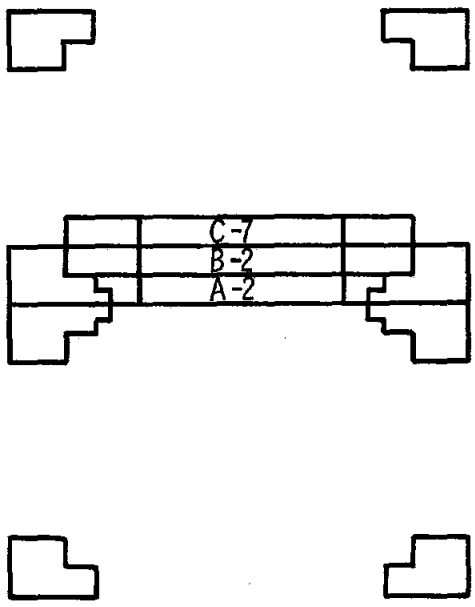

Figure 5.

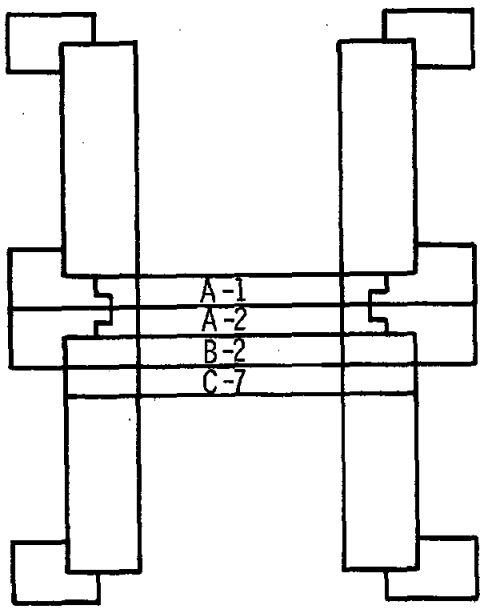

Figure 6.

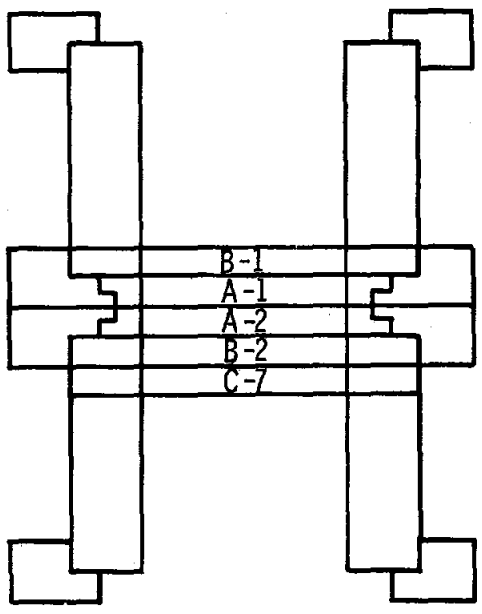

Figure 7.

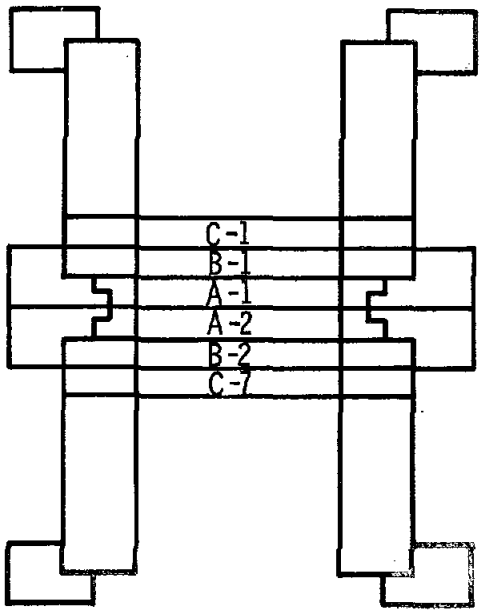

Figure 8.

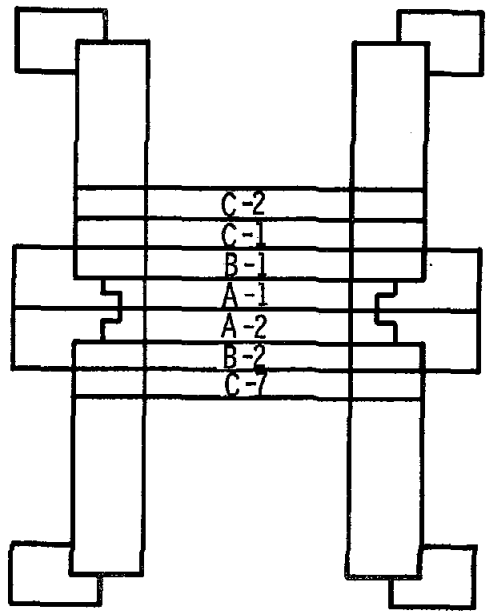

Figure 9.

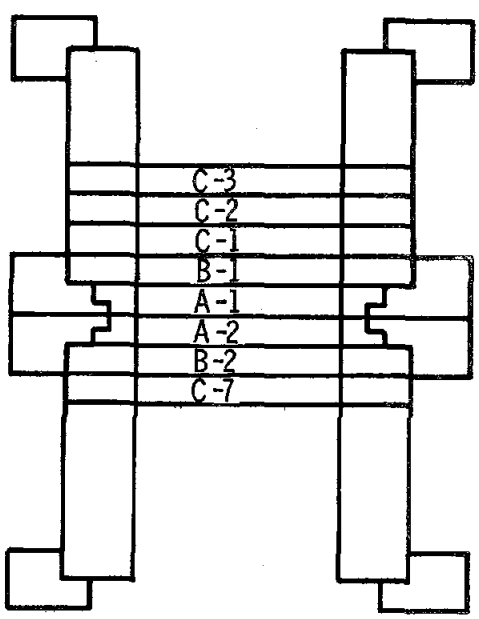

Figure 10.

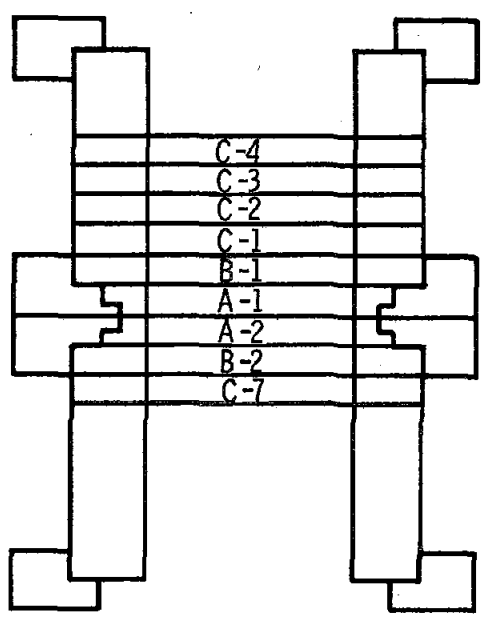

Figure 11.

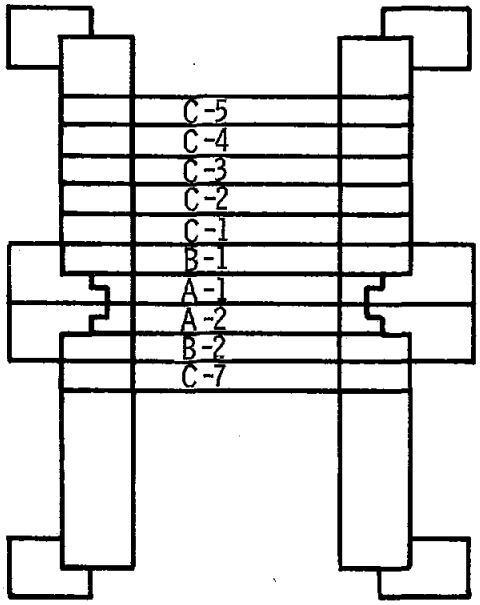

Figure 12.

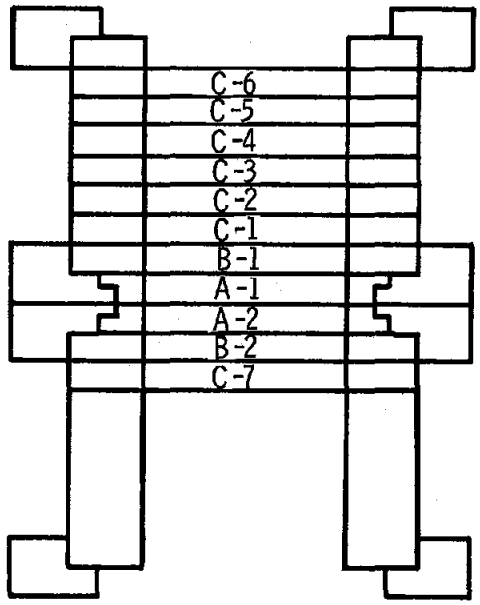

Figure 13.

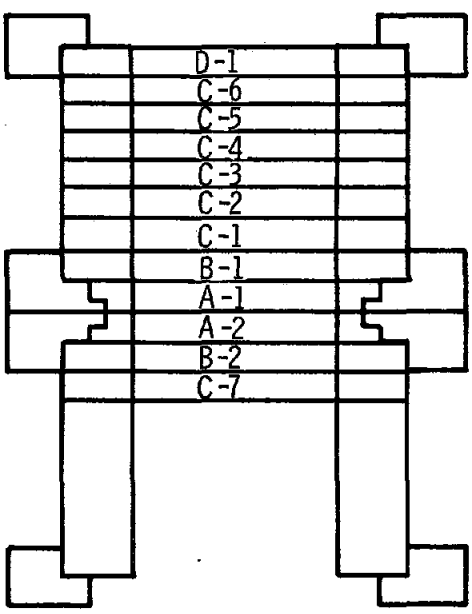

Figure 14.

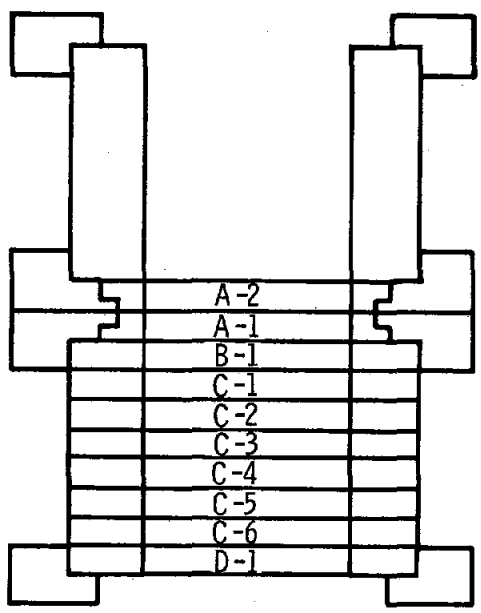

Figure 15.

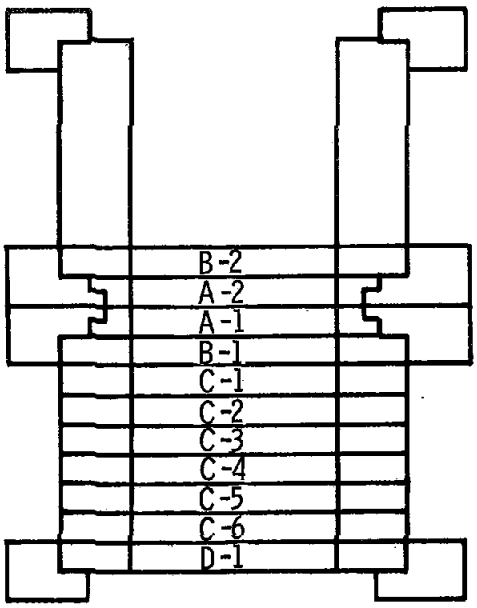

Figure 16.

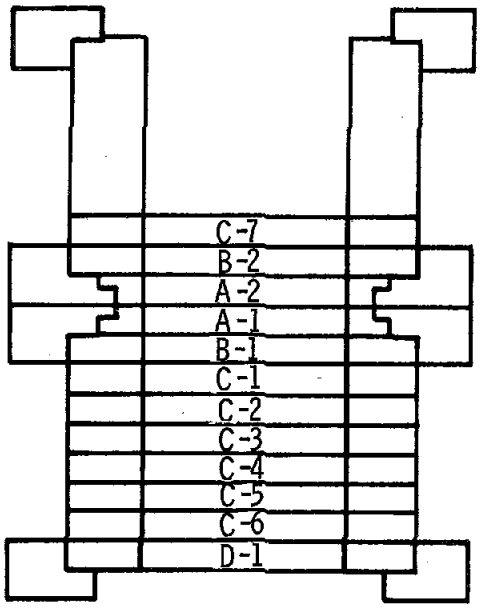

Figure 17.

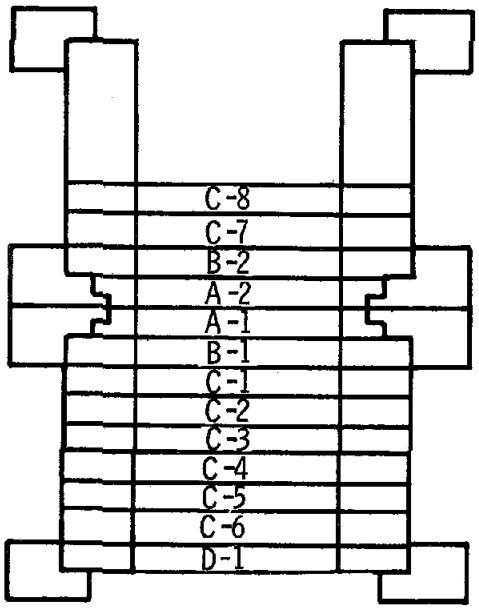

Figure 18.

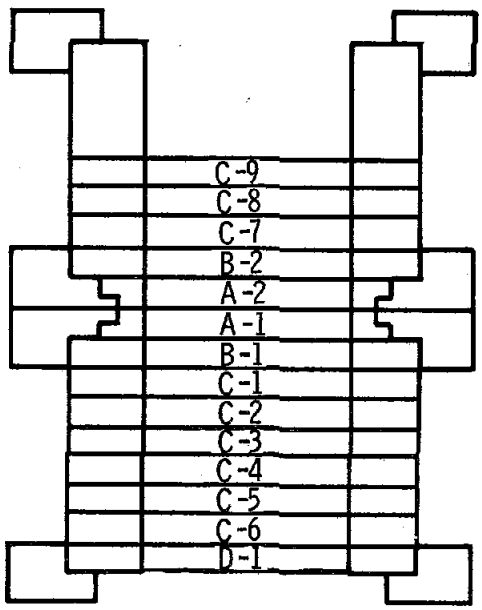

Figure 19.

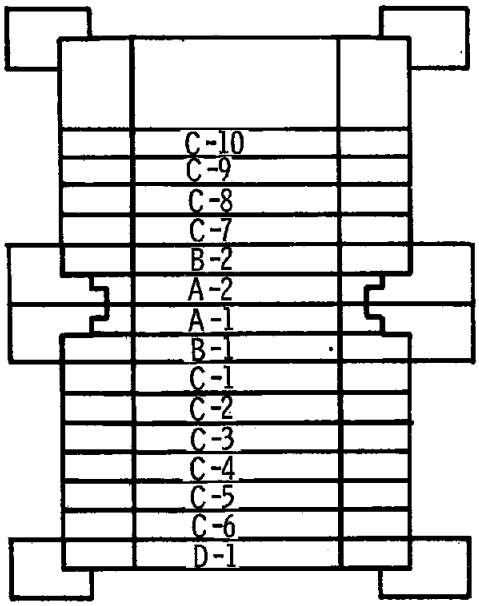

Figure 20.

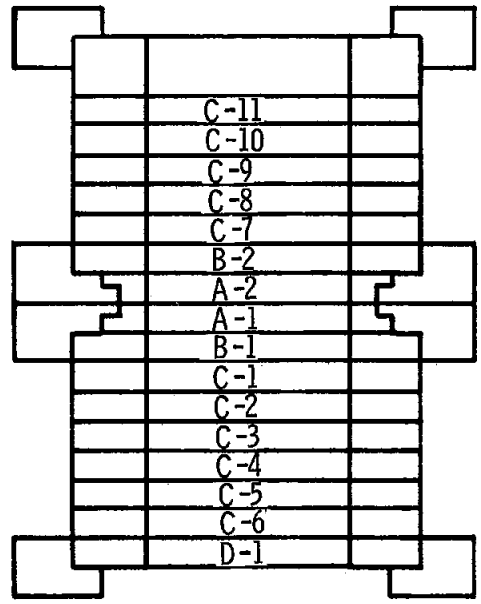

Figure 21.

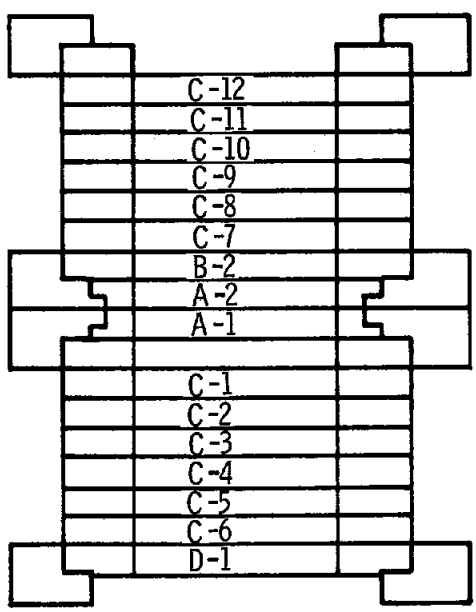

Figure 22.

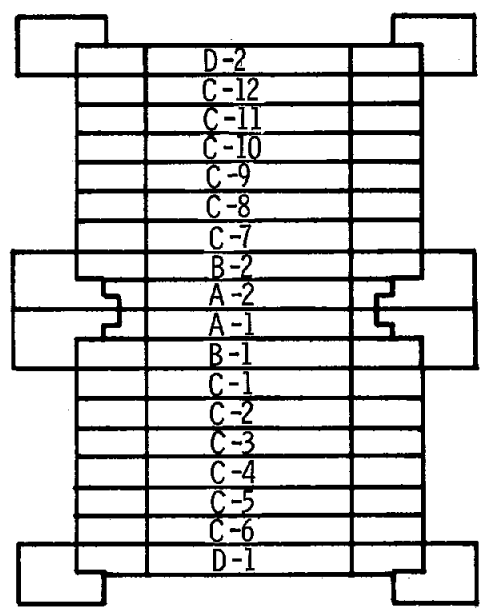

Figure 23.

SPR III

Critical Assembly Checklist

1. _____ Complete Integrated Plant Test.

2. _____ Remove mockup core and control element drives.

3. _____ Source only count rate with elevator up

Instrument shack:	Ch 1 _____	Ch 2 _____
	Ch 3 _____	Ch 4 _____
Console:	Ch 1 _____	Ch 2 _____
	Ch 3 _____	Ch 4 _____

4. _____ Source only count rate with elevator down

Pit detector: Ch 5 _____

5. _____ Background count rates.

Instrument shack:	Ch 1 _____	Ch 2 _____
	Ch 3 _____	Ch 4 _____
Console:	Ch 1 _____	Ch 2 _____
	Ch 3 _____	Ch 4 _____

Pit: Ch 5 _____

6. _____ Position plate A-2.

Instrument Shack:	Ch 1 _____	Ch 2 _____	Ch 3 _____	Ch 4 _____
	M 1 _____	M 2 _____	M 3 _____	M 4 _____
Console:	Ch 1 _____	Ch 2 _____	Ch 3 _____	Ch 4 _____
	M 1 _____	M 2 _____	M 3 _____	M 4 _____

7. _____ Position plate B-2.

Instrument Shack:	Ch 1 _____	Ch 2 _____	Ch 3 _____	Ch 4 _____
	M 1 _____	M 2 _____	M 3 _____	M 4 _____
Console:	Ch 1 _____	Ch 2 _____	Ch 3 _____	Ch 4 _____
	M 1 _____	M 2 _____	M 3 _____	M 4 _____

8. _____ Position plate C-7.

Instrument Shack: Ch 1 _____ Ch 2 _____ Ch 3 _____ Ch 4 _____

M 1 _____ M 2 _____ M 3 _____ M 4 _____

Console: Ch 1 _____ Ch 2 _____ Ch 3 _____ Ch 4 _____

M 1 _____ M 2 _____ M 3 _____ M 4 _____

9. _____ Plates A-2, B-2, C-7 in lower half; plate A-1 in upper half.

Instrument Shack: Ch 1 _____ Ch 2 _____ Ch 3 _____ Ch 4 _____

M 1 _____ M 2 _____ M 3 _____ M 4 _____

Console: Ch 1 _____ Ch 2 _____ Ch 3 _____ Ch 4 _____

M 1 _____ M 2 _____ M 3 _____ M 4 _____

10. _____ Count rates in pit.

Ch 5 _____ M 5 _____

11. _____ Position plate B-1.

Instrument Shack: Ch 1 _____ Ch 2 _____ Ch 3 _____ Ch 4 _____

M 1 _____ M 2 _____ M 3 _____ M 4 _____

Console: Ch 1 _____ Ch 2 _____ Ch 3 _____ Ch 4 _____

M 1 _____ M 2 _____ M 3 _____ M 4 _____

12. _____ Position plate C-1.

Instrument Shack: Ch 1 _____ Ch 2 _____ Ch 3 _____ Ch 4 _____

M 1 _____ M 2 _____ M 3 _____ M 4 _____

Console: Ch 1 _____ Ch 2 _____ Ch 3 _____ Ch 4 _____

M 1 _____ M 2 _____ M 3 _____ M 4 _____

13. _____ Position plate C-2.

Instrument Shack: Ch 1 _____ Ch 2 _____ Ch 3 _____ Ch 4 _____

M 1 _____ M 2 _____ M 3 _____ M 4 _____

Console: Ch 1 _____ Ch 2 _____ Ch 3 _____ Ch 4 _____

M 1 _____ M 2 _____ M 3 _____ M 4 _____

14. _____ Count rates in pit.

Ch 5 _____ M 5 _____

15. _____ Position plate C-3.

Instrument Shack: Ch 1 _____ Ch 2 _____ Ch 3 _____ Ch 4 _____

M 1 _____ M 2 _____ M 3 _____ M 4 _____

Console: Ch 1 _____ Ch 2 _____ Ch 3 _____ Ch 4 _____

M 1 _____ M 2 _____ M 3 _____ M 4 _____

16. _____ Position plate C-4.

Instrument Shack: Ch 1 _____ Ch 2 _____ Ch 3 _____ Ch 4 _____

M 1 _____ M 2 _____ M 3 _____ M 4 _____

Console: Ch 1 _____ Ch 2 _____ Ch 3 _____ Ch 4 _____

M 1 _____ M 2 _____ M 3 _____ M 4 _____

17. _____ Position plate C-5.

Instrument Shack: Ch 1 _____ Ch 2 _____ Ch 3 _____ Ch 4 _____

M 1 _____ M 2 _____ M 3 _____ M 4 _____

Console: Ch 1 _____ Ch 2 _____ Ch 3 _____ Ch 4 _____

M 1 _____ M 2 _____ M 3 _____ M 4 _____

18. _____ Count rates in pit.

Ch 5 _____ M 5 _____

19. _____ Position plate C-6.

Instrument Shack: Ch 1 _____ Ch 2 _____ Ch 3 _____ Ch 4 _____

M 1 _____ M 2 _____ M 3 _____ M 4 _____

Console: Ch 1 _____ Ch 2 _____ Ch 3 _____ Ch 4 _____

M 1 _____ M 2 _____ M 3 _____ M 4 _____

20. _____ Position plate D-1.

Instrument Shack: Ch 1 _____ Ch 2 _____ Ch 3 _____ Ch 4 _____

M 1 _____ M 2 _____ M 3 _____ M 4 _____

Console: Ch 1 _____ Ch 2 _____ Ch 3 _____ Ch 4 _____

M 1 _____ M 2 _____ M 3 _____ M 4 _____

21. _____ Disassemble core.

22. _____ Assemble safety block and position on spider.

23. _____ Install reflectors.

24. _____ Position plate A-2.

Instrument Shack: Ch 1 _____ Ch 2 _____ Ch 3 _____ Ch 4 _____

M 1 _____ M 2 _____ M 3 _____ M 4 _____

Console: Ch 1 _____ Ch 2 _____ Ch 3 _____ Ch 4 _____

M 1 _____ M 2 _____ M 3 _____ M 4 _____

25. _____ Position plate B-2.

Instrument Shack: Ch 1 _____ Ch 2 _____ Ch 3 _____ Ch 4 _____

M 1 _____ M 2 _____ M 3 _____ M 4 _____

Console: Ch 1 _____ Ch 2 _____ Ch 3 _____ Ch 4 _____

M 1 _____ M 2 _____ M 3 _____ M 4 _____

26. _____ Position plate C-7.

Instrument Shack: Ch 1 _____ Ch 2 _____ Ch 3 _____ Ch 4 _____

M 1 _____ M 2 _____ M 3 _____ M 4 _____

Console: Ch 1 _____ Ch 2 _____ Ch 3 _____ Ch 4 _____

M 1 _____ M 2 _____ M 3 _____ M 4 _____

27. _____ Position plate C-8.

Instrument Shack: Ch 1 _____ Ch 2 _____ Ch 3 _____ Ch 4 _____

M 1 _____ M 2 _____ M 3 _____ M 4 _____

Console: Ch 1 _____ Ch 2 _____ Ch 3 _____ Ch 4 _____

M 1 _____ M 2 _____ M 3 _____ M 4 _____

28. _____ Count rates in pit.

Ch 5 _____ M 5 _____

29. _____ Position plate C-9.

Instrument Shack: Ch 1 _____ Ch 2 _____ Ch 3 _____ Ch 4 _____

M 1 _____ M 2 _____ M 3 _____ M 4 _____

Console: Ch 1 _____ Ch 2 _____ Ch 3 _____ Ch 4 _____

M 1 _____ M 2 _____ M 3 _____ M 4 _____

30. _____ Position plate C-10.

Instrument Shack: Ch 1 _____ Ch 2 _____ Ch 3 _____ Ch 4 _____

M 1 _____ M 2 _____ M 3 _____ M 4 _____

Console: Ch 1 _____ Ch 2 _____ Ch 3 _____ Ch 4 _____

M 1 _____ M 2 _____ M 3 _____ M 4 _____

31. _____ Position plate C-11.

Instrument Shack:	Ch 1 _____	Ch 2 _____	Ch 3 _____	Ch 4 _____
	M 1 _____	M 2 _____	M 3 _____	M 4 _____
Console:	Ch 1 _____	Ch 2 _____	Ch 3 _____	Ch 4 _____
	M 1 _____	M 2 _____	M 3 _____	M 4 _____

32. _____ Count rates in pit.

Ch 5 _____ M 5 _____

33. _____ Position plate C-12.

Instrument Shack:	Ch 1 _____	Ch 2 _____	Ch 3 _____	Ch 4 _____
	M 1 _____	M 2 _____	M 3 _____	M 4 _____
Console:	Ch 1 _____	Ch 2 _____	Ch 3 _____	Ch 4 _____
	M 1 _____	M 2 _____	M 3 _____	M 4 _____

34. _____ Position plate D-2.

Instrument Shack:	Ch 1 _____	Ch 2 _____	Ch 3 _____	Ch 4 _____
	M 1 _____	M 2 _____	M 3 _____	M 4 _____
Console:	Ch 1 _____	Ch 2 _____	Ch 3 _____	Ch 4 _____
	M 1 _____	M 2 _____	M 3 _____	M 4 _____

35. _____ Count rates in pit.

Ch 5 _____ M 5 _____

36. _____ Raise reactor out of pit.

37. _____ Use control elements to achieve criticality.

38. _____ Scram reactor and remove source from center of core.

39. _____ Place source in source tube.

40. _____ Bring reactor to d. c. and drop source.

41. _____ Secure reactor.

SPR III

Critical Experiment Personnel

1.	Critical Assembly Coordinator -	Reuscher
		Coats
2.	SPR Supervisor ----------	Snyder
		Conant
3.	SPR Operator ----------	James
4.	Health Physicists ----------	Abbot
		Statzula
		Berglund
5.	Fuel Control Officer ----------	Estes
		Philbin
6.	Loading Supervisor ----------	Conant
		Snyder
7.	Loader and Assembler --------	Domingues
		Merriott
		James
		Cox
		Gonzalez
8.	Data Recorders ----------	Merriott
		Domingues
9.	Independent Analysis ---------	Reuscher
		Coats
		Schmidt
		Philbin

Other individuals in 5221 and 5222 may be called on to assist in the loading operation.

PART II

SPR III

Test Series Proposal No. 2
Zero and Low Power Tests

Purpose

The purpose of the zero- and low-power tests is to provide the static data required for pulse operation. These data include the reactivity worths of the pulse element, control elements, safety block, shroud, and materials in the irradiation cavity.

General Procedures

The initial critical experiment will be completed prior to the start of the zero and low power tests. The system reactivity will not exceed prompt critical, the maximum reactivity configuration will not exceed 95¢, the minimum period will not be shorter than 150 milliseconds, and the maximum fuel temperature will not exceed 100°C. Operating procedures used for SPR II will be used with these tests when applicable. The fission product activity of the core will be maintained as low as possible to minimize personnel exposure during preparations for the fiducial tests.

Responsibility

The responsibility for the safe conduct of this experiment rests with the Supervisor of the Reactor Source Applications Division. This test series proposal will be reviewed and evaluated by the SPR Committee and audited by Quality Assurance personnel.

Assembly Hardware

The following hardware, in addition to the assembled SPR III, will be required.

1. SPR III shroud
2. Glory hole thimble
3. Extra reflector elements
4. SPR III experiment stand with remote sample positioning mechanism

5. Spacers for pulse element

6. Samples for reactivity measurements.

Personnel Requirements

The normal SPR operating crew will be required. In addition, one other individual will assist in data handling and analysis.

Test Objectives

The following tests and measurements will be conducted during the zero- and low-power tests.

1. Control and pulse element reactivity worths
2. Safety block worth
3. Shroud worth
4. Reflector coupling effects
5. Effect of experiments on reflector worths
6. Shutdown and excess reactivity
7. Worth of glory hole liner
8. Worth of various materials in glory hole
9. Set safety block and reflector drive speeds
10. Scram delay time
11. Reactivity worth of pit

Procedures

- The control and pulse element reactivity worths will be determined by measuring the stable reactor period as a function of element position. The rod bump technique will be used to cover the entire travel of each element. Spacers will be used to hold the pulse element at intermediate positions so that it can be calibrated as a function of position.
- The safety block worth will be determined with spacers and delayed critical element positions and pulse die-away technique.

•The worth of the shroud will be determined with delayed critical element positions. The effect of the shroud on reflector worths will be checked.

•Reactivity coupling effects between reflectors will be determined. Control element reactivity worths will be measured by period techniques with one reflector in the full-up, full-down, and an intermediate position.

•The effect of external experiments on the reactivity worth of a reflector will be determined with period measurements. The decoupling effect of the shroud will also be determined.

•The shutdown and excess reactivity values will be calculated from the integral measured worths.

•The reactivity worth of the glory hole liner will be measured by the d. c. element positions.

•The worths of various materials in the glory hole will be determined by d. c. measurements. The remote controlled glory hole stand will be used to locate small samples as a function of diameter and vertical position. In addition, nested cylinders of polyethylene will be used in the glory hole to determine the effectiveness of the glory hole liner.

•The various drive speeds will be set to comply with the reactivity insertion rates specified in the SPR III Tech Specifications.

•The scram delay times will be measured to insure that 285 milliseconds is not exceeded.

•The reactivity worth of the pit will be determined using the same procedures recently employed with SPR II.

APPENDIX B

OPERATIONAL DRAWINGS
FOR
SPR III REACTOR

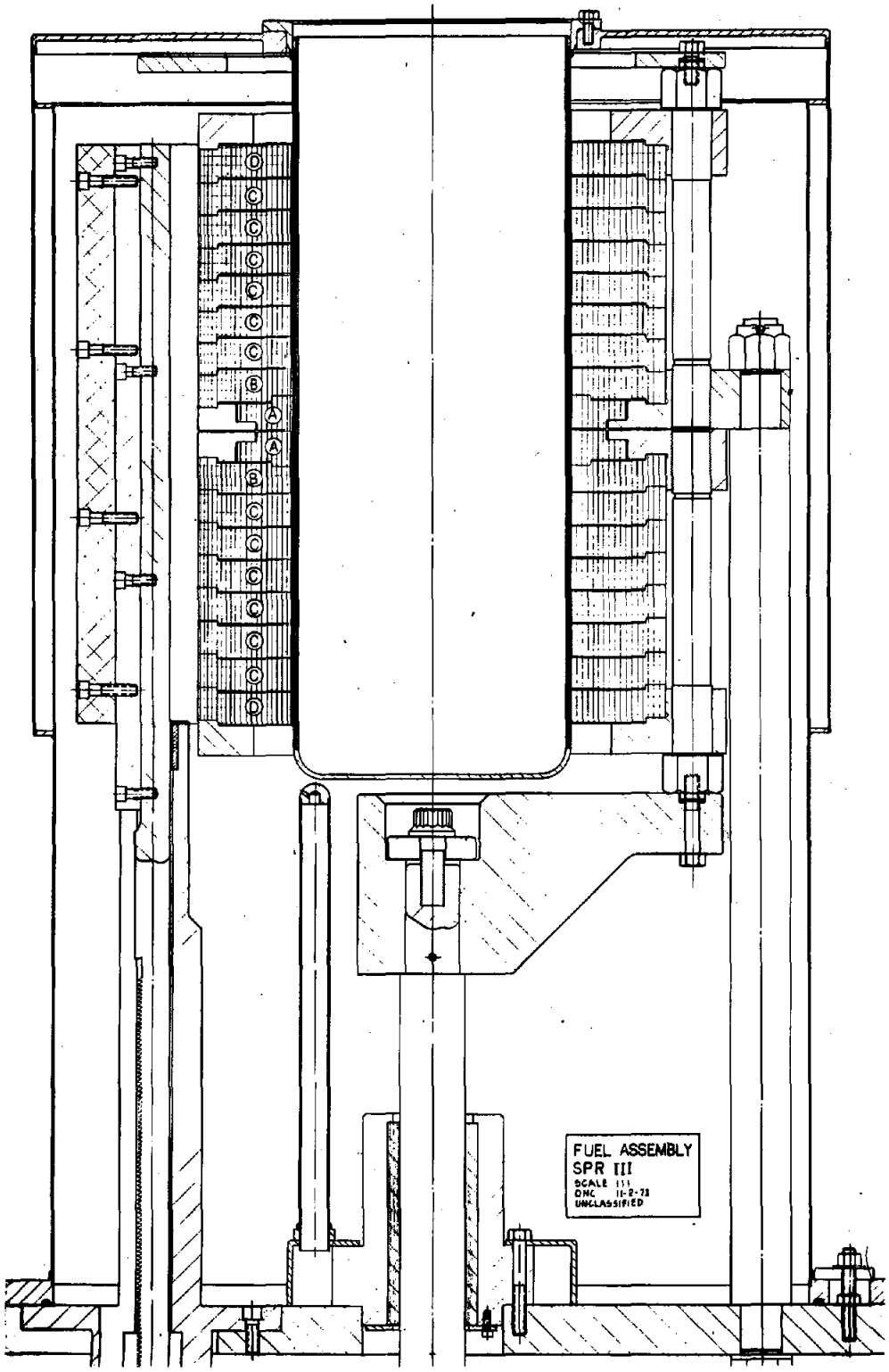
FUEL ASSEMBLY
SPR III
SCALE 1:1
DWG 11-2-73
UNCLASSIFIED

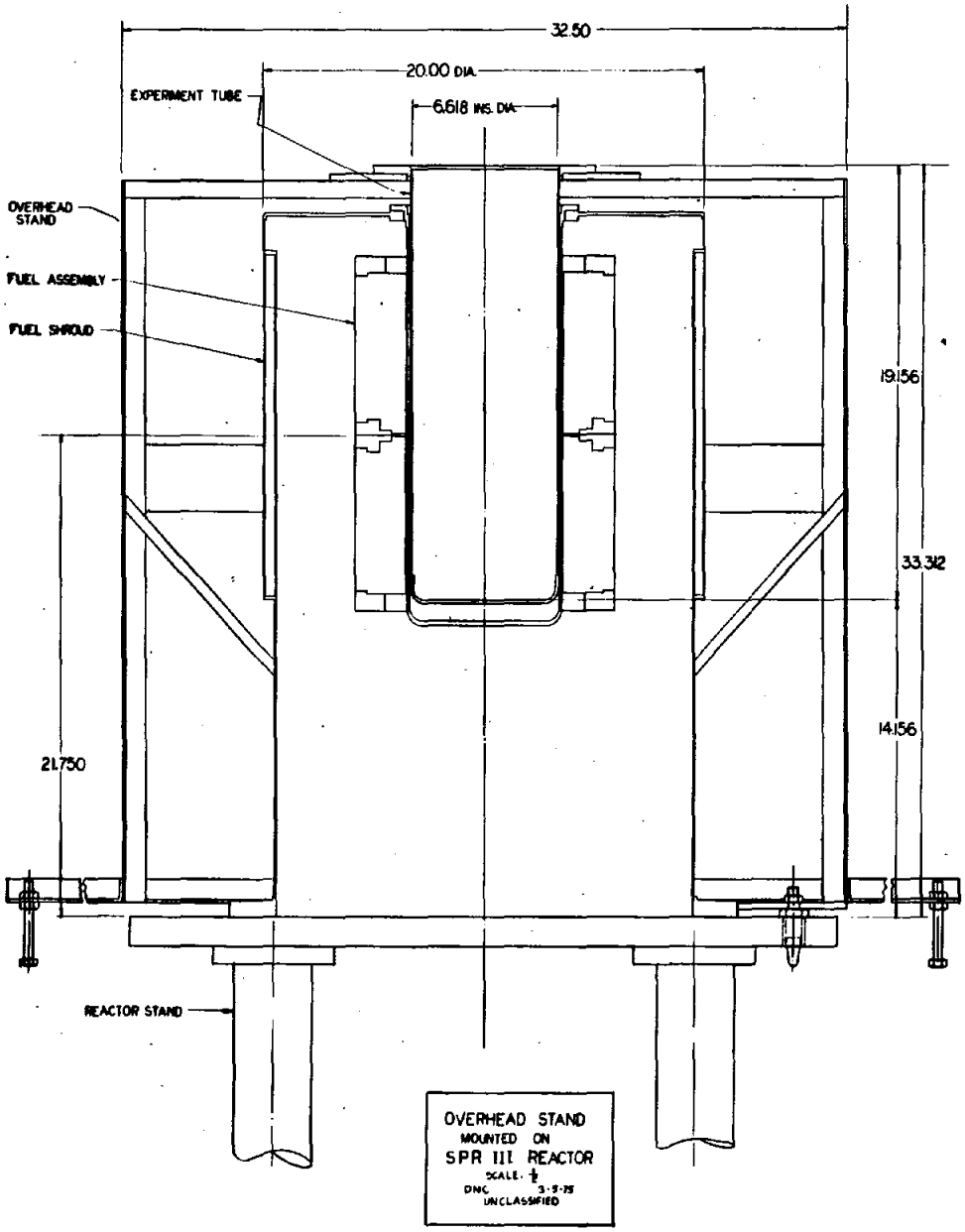
32.50
20.00 DIA.
6.618 INS. DIA.
EXPERIMENT TUBE
OVERHEAD STAND
FUEL ASSEMBLY
FUEL SHROUD
19.156
33.312
14.156
21.750
REACTOR STAND
OVERHEAD STAND
MOUNTED ON
SPR III REACTOR
SCALE: 1/2
DNC 3-5-75
UNCLASSIFIED

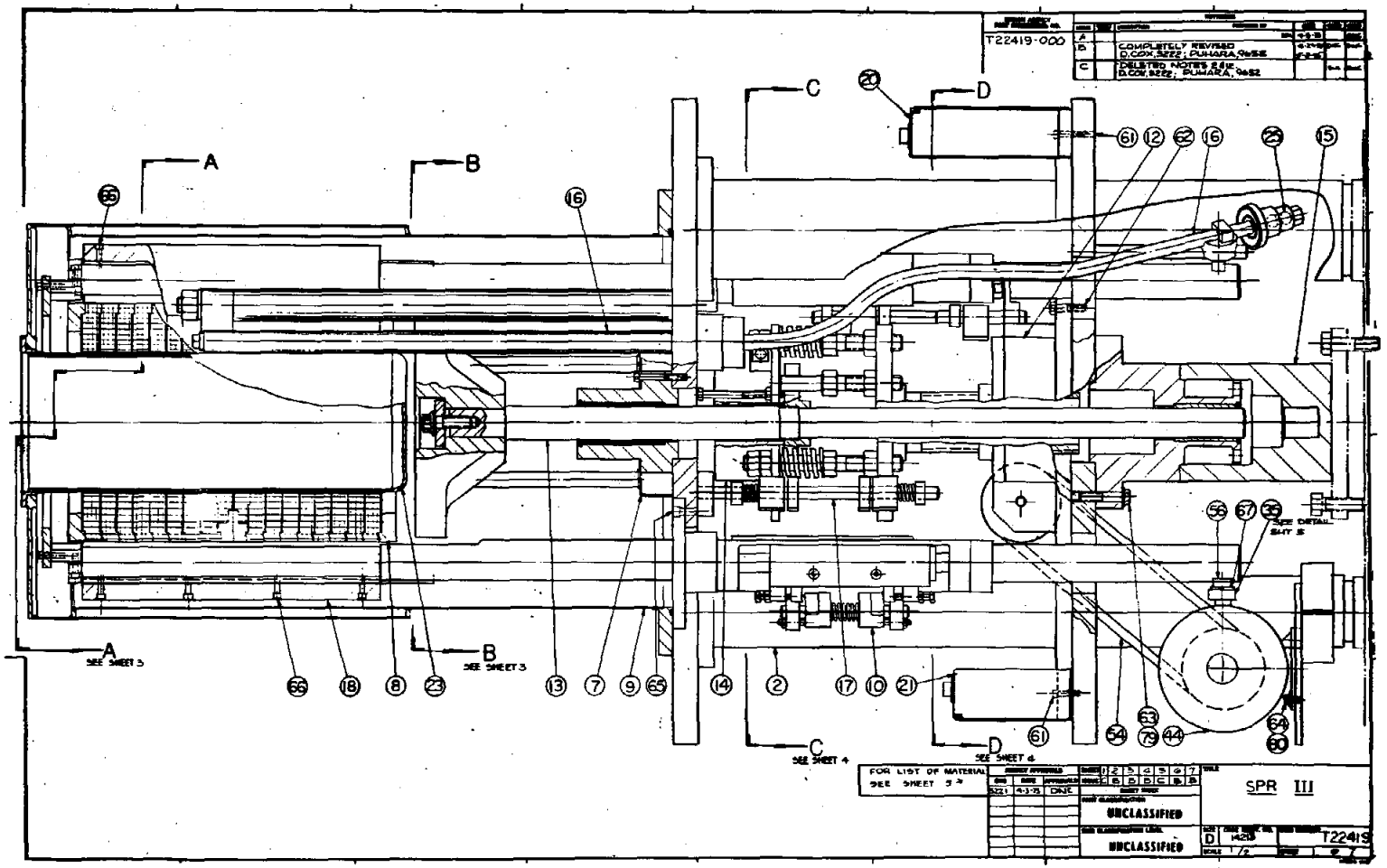
T22419-000
COMPLETELY REVISED
DELETED NOTES & ETC
A
B
C
D
SEE SHEET 3
SEE SHEET 4
SEE DETAIL SHT 5
FOR LIST OF MATERIAL SEE SHEET 3
UNCLASSIFIED
UNCLASSIFIED
SPR III
T22419

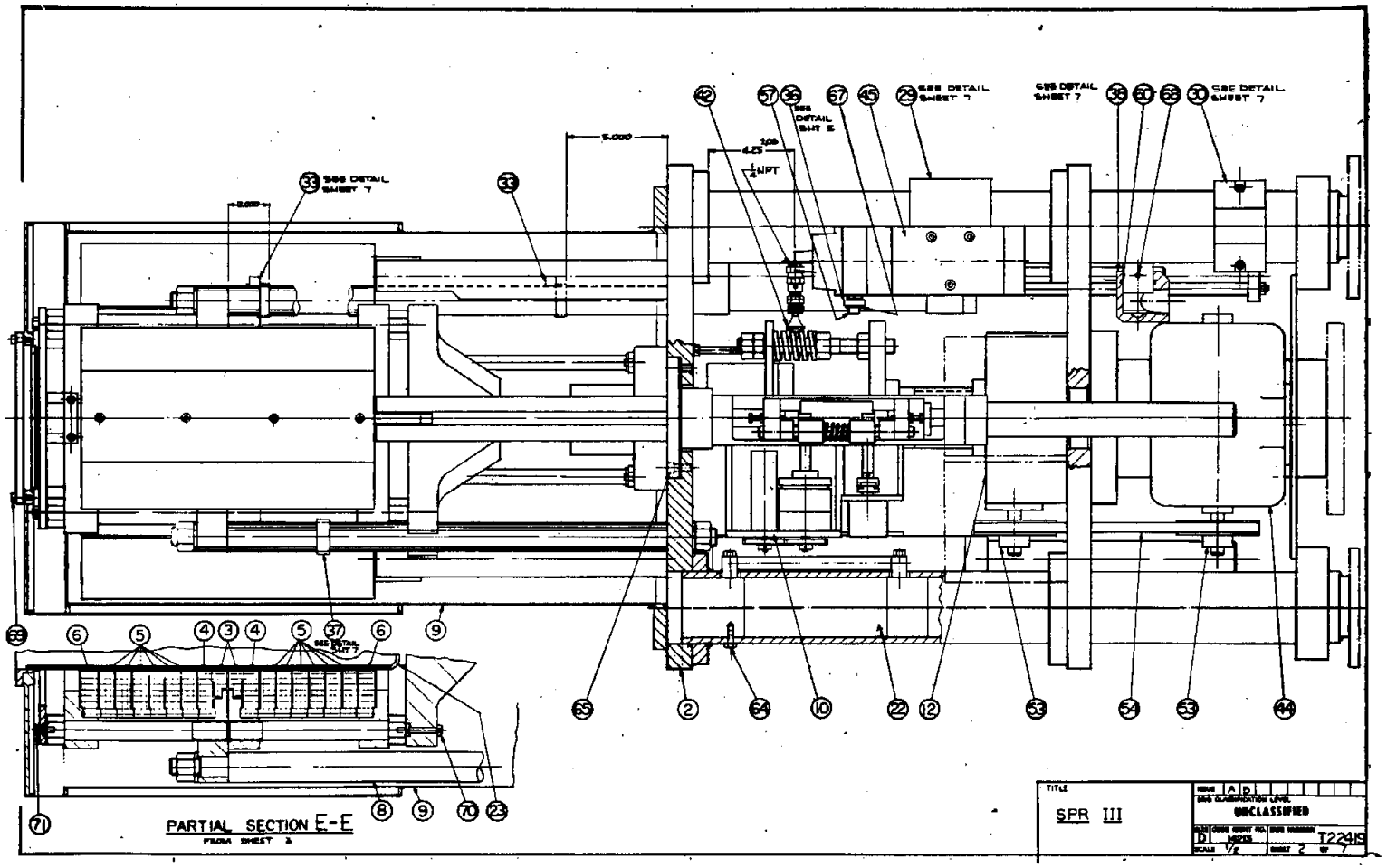
PARTIAL SECTION E-E
FROM SHEET 3
SPR III
UNCLASSIFIED
T22419
SHEET 2 OF 7

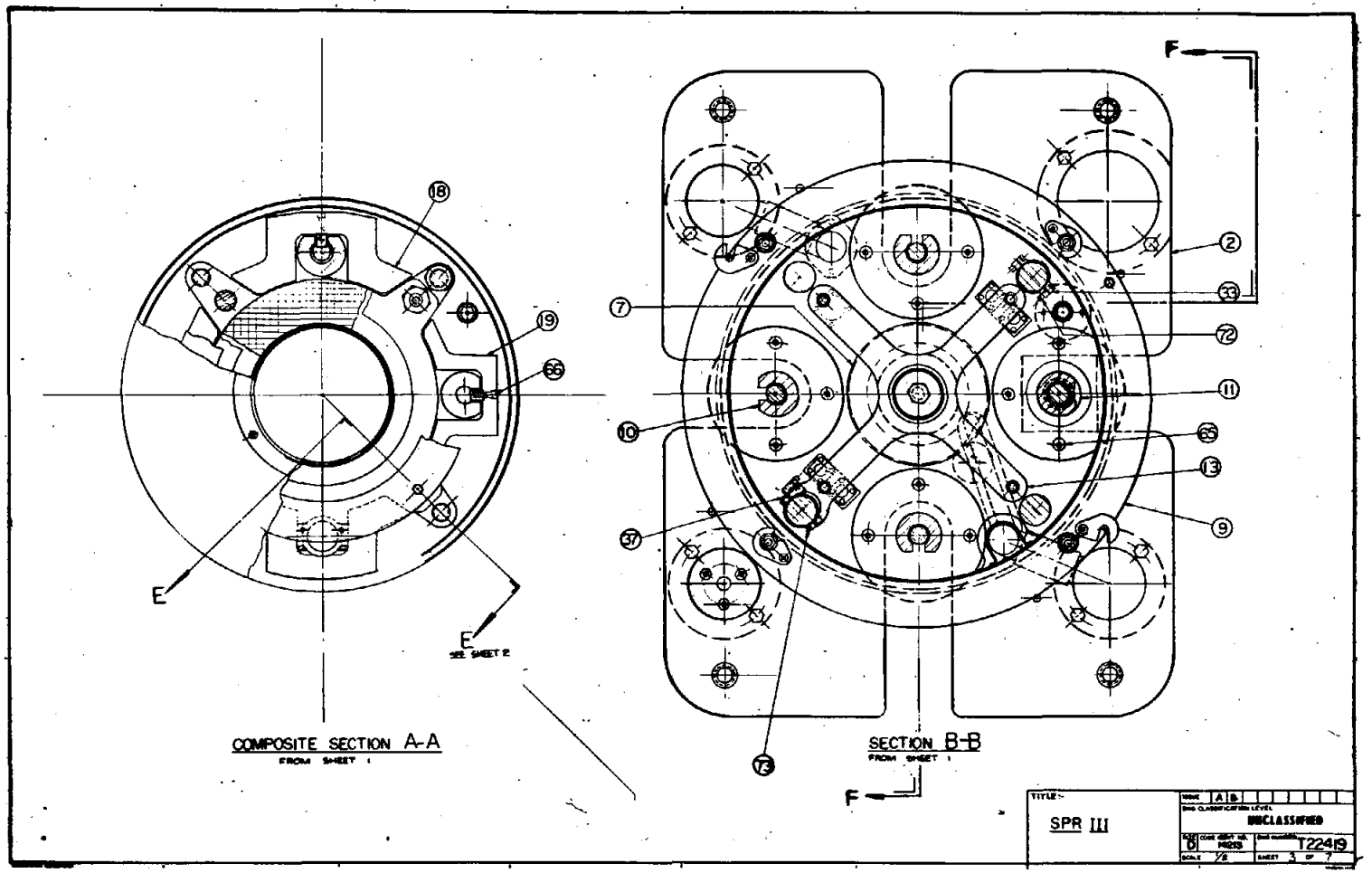
COMPOSITE SECTION A-A
FROM SHEET 1
SECTION B-B
FROM SHEET 1
SEE SHEET 2
E
F
18
19
66
7
10
37
73
2
33
72
11
65
13
9
TITLE:-
SPR III
UNCLASSIFIED
T22419
SCALE 1/8
SHEET 3 OF 7

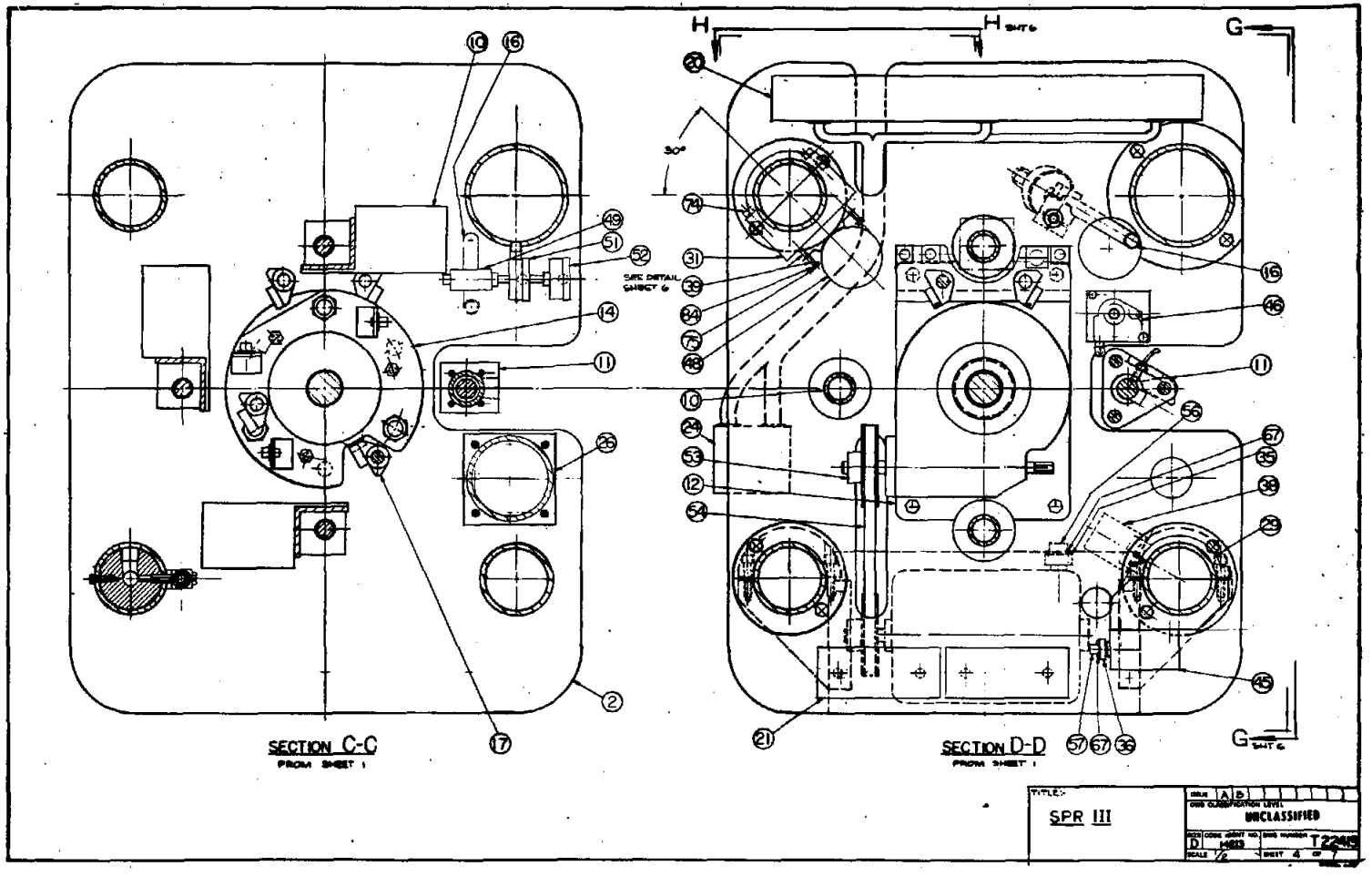
SECTION C-C
FROM SHEET 1
SECTION D-D
FROM SHEET 1
SEE DETAIL SHEET 6
30°
H
H SHT 6
G
G SHT 6
SPR III
UNCLASSIFIED
D
1/2
SHEET 4 OF 7

UNCLASSIFIED

NOTES:

1. MAY BE PURCHASED FROM THE NUPRO CO., 19630 SAMANAC ROAD, CLEVELAND, OHIO.44110.
2.
3. MAY BE PURCHASED FROM THE BOSTON GEAR WORKS, 14 HAYWARD STREET, QUINCY, MASS., 0217.
4. MAY BE PURCHASED FROM SKINNER ELECTRONIC VALVE DIVISION, SKINNER PRECISION INDUSTRIES, INC., 95 EDGEWOOD AVE., NEW BRITAIN, CONN., 06050.
5. PURCHASE FROM ROSS OPERATING VALVE CO., 120 E. GOLDEN GATE AVE., DETROIT, MICHIGAN
6. PURCASE FROM ATKOMATIC VALVE CO., 141 S. SHERMAN DRIVE INDIANPOLIS, INDIANA, 46204
7. MAY BE PURCHASED FROM THE MELETRON CORP. 950 N. HIGHLAND AVE., LOS ANGELES, CALIF.
8. PURCHASE FROM SPARTON SOUTHWEST, INC., AL BUQUERQUE, NEW MEXICO.(TYPE 401-A-29-20)
9.
10. MAY BE PURCHASED FROM THE BENDIX ELECTRICAL COMPONENTS DIVISION SIDNEY, N.Y.
11. MAY BE PURCHASED FROM THE AMERICAN DRILL BUSHING CO., 5107 PACIFIC BLVD., LOS ANGELES, CALIF.

12

13. ALUMINUM 6061-T6 PER QQ-A-250/11, PLAIN ANODIZE TYPE I PER 9904100.

14. STAINLESS STEEL TYPE 304, CONF A QQ-S-766, COLD DRAWN.

15. FOR GENERAL REQUIREMENTS AND DRAWING INTERPRETATIONS PER 9900000-05.

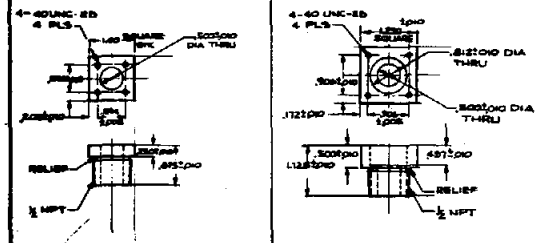

(35) CONNECTOR BLOCK
MATERIAL: ALUMINUM ALLOY 6061-T6
SCALE ½

(35) CONNECTOR BLOCK, MOTOR
MATERIAL: AL. ALLOY-6061-T6
SCALE ½

			2		WASHER PLAIN 10#	4-4C	84
			4		NUT, FLANGE, AMERICAN #ADB-25155	11 6-8C	83
			4		NUT, HEX. 5/16-18	6-8C	82
			3		SCREW, SOC. HD, 3/8-16 X 1 1/2	8-8B	81
			4		WASHER, PLAIN, 1/4 DIA	1-1A	80
			7		WASHER, PLAIN, 3/8 DIA	1-2A	79
			4		SCREW, SOC HD, 1/4-20 X 1 3/4	6-5B	78
			2		SCREW, HEX HD, 1/4-20 X 2 1/2 LG	6-5C	77
			3		SCREW, HEX HD, 1/4-20 X 2	6-6A	76
			2		SCREW, SOC HD, 10-32 X 2 LG	4-4C	75
			8		SCREW, SOC HD, 5/16-18 X 1 1/2 LG	4-4C	74
			4		SCREW, SOC HD, #8-32 X 5/8 LG	3-4A	73
			12		SCREW, SOC. HD, #8-32 x 3/8 LG	3-1C	72
			8		SCREW, HEX HD, 3/8-24 x 3/4 LG	2-8A	71
			8		SCREW, HEX HD, 3/8-24 x 2 LG	2-6A	70
			4		SCREW, SOC HD, 1/4-20 x 1/2 LG	2-8B	69
			2		SCREW, SOC. SET, 1/4-20 x 3/8 LG	2-2D	68
			6		SCREW, PAN HD, #4-40 x 1/8 LG	1-1A	67
			18		SCREW, SOC. HD, 1/4-20 x 1 1/4 LG	1-7A	66
			12		SCREW, SOC. HD, 5/16-18 x 1 LG	1-5A	65
			5		SCREW, HEX. HD, 1/4-20 x 3/4 LG	1-1A	64
			5		SCREW, HEX. HD, 3/8-16 x 1 3/4 LG	1-2A	63
			4		SCREW, HEX. HD, 3/8-16 x 1 1/4 LG	1-2D	62
			6		SCREW, SOC. HD., 1/4-20 x 1 LG	1-3A	61
			1		"O" RING, PARKER #2-222	2-2D	60
			1	SA1173-4	CONNECTOR, BENDIX #PT00-8-3P	6-2C	59
							58
			3	SA1173-2	CONNECTOR, BENDIX #PT00-8-3P	2-4D	57
			1	SA1173-7	CONNECTOR, BENDIX #PT00-14-5P	1-1A	56
							55
			1		VEE BELT 1/2" x 36"	1-7A	54
			2		PULLEY, 1/2 VEE BELT, 3 1/2" DIA. 5/8 BORE	2-2A	53
			1		AIR PRESSURE GAUGE, 0-60 PSI 1/4 NPT	6-7D	52
			1		AIR PRESSURE GAUGE, 0-200 PSI (1/4 NPT)	6-7D	51
			1		PRESSURE REGULATOR, ROSS #[illegible]	6 6-6D	50
			1		PRESSURE TRANSDUCER, SPARTON	8 4-5C	49

			1		PRESSURE SWITCH, MELETRON #[illegible]	7	6-6B	48
			1		VALVE, NITROGEN, ATKOMATIC #154486	6	6-5B	47
			1		VALVE, AIR, 4 WAY, ROSS #16164A2908	5	6-6B	46
			1		VALVE, AIR, 5-WAY, SKINNER #54K0AAL3	4	2-3B	45
			1		MOTOR, ELECTRIC, 115 DC, BOSTON #29298	3	1-2A	44
								43
			1		VALVE, SAFETY RELIEF, 06R-4M	1	2-4B	42
			1		PIPE TEE MODIFICATION		6-6B	41
								40
			4		SPACER		6-6B	39
			1		ADAPTER	15	2-2B	38
			1		CLAMP, BENTLY HEAD	15	2-7A	37
			3		CONNECTOR BLOCK	15	2-4B	36
			1		CONNECTOR BLOCK, MOTOR	15	1-1A	35
			1		CONNECTOR BLOCK, PRESSURE SWITCH	15	4-5C	34
			2		CLAMP, THERMOCOUPLE SHEATH	15	2-7C	33
			1		RISER BLOCK VALVE	15	4-5C	32
			1		MOUNTING BRACKET PRESSURE SWITCH	15	4-5C	31
			1		MOUNTING BRACKET VALVE	15	2-2B	30
			1		MOUNTING BRACKET VALVE	15	2-3B	29
			4		STUD, STEEL-5/16-18 UNC	14	4-8C	28
								27
			1	T25002-000	BOOSTER, MILLER		6-6B	26
			1	T25050-000	SOURCE CAPSULE		1-1B	25
			1	P20272-000	CONNECTOR		4-4C	24
			1	T20006-000	EXPERIMENTAL CAVITY TUBE		1-6A	23
			1	[illegible]	RECOVERY TANK		2-3A	22
			2	T22429-000	JUNCTION BOX PROTECT CHANNEL		1-3A	21
			1	T22420-000	JUNCTION BOX MAIN		1-3A	20
			1	T20007-000	REFLECTOR PULSING ELEMENT		3-3C	19
			3	T20008-000	REFLECTOR CONTROL ELEMENT		1-7A	18
			1	T20000-000	SWITCH POST, SAFETY BLOCK		1-4A	17
			1	T22427-000	SOURCE TUBE		1-5B	16
			1	T22426-000	SHOCK ABSORBER UNIT SAFETY BLOCK		1-1B	15
			1	T22425-000	RELEASE MAGNET		1-4A	14
			1	T22424-000	SUPPORTING ROD		3-2B	13
			1	T22423-000	SAFETY BLOCK DRIVE UNIT		2-3A	12
			1	T22422-000	PULSING ELEMENT DRIVE UNIT		4-1C	11
			3	T20021-000	CONTROL ELEMENT DRIVE UNIT		1-3A	10
			1	T24025-000	FUEL SHROUD		1-5A	9
			1	T20024-000	FUEL SUPPORT ASSY		1-5A	8
			1	T20057-000	COOLING PLENUM		1-3A	7
			2	T25000-000	FUEL RING "D"		2-6B	6
			14	T25001-000	FUEL RING "C"		2-9B	5
			2	T25002-000	FUEL RING "B"		2-7B	4
			2	T25003-000	FUEL RING "A"		2-7B	3
			1	T20000-000	STAND		1-6A	2
								1

LIST OF MATERIAL

SPR III

ISSUE C
DOE CLASSIFICATION LEVEL
UNCLASSIFIED
DRAWING NO. D114213
SCALE-NOTED
SHEET 5 OF 7
T2249

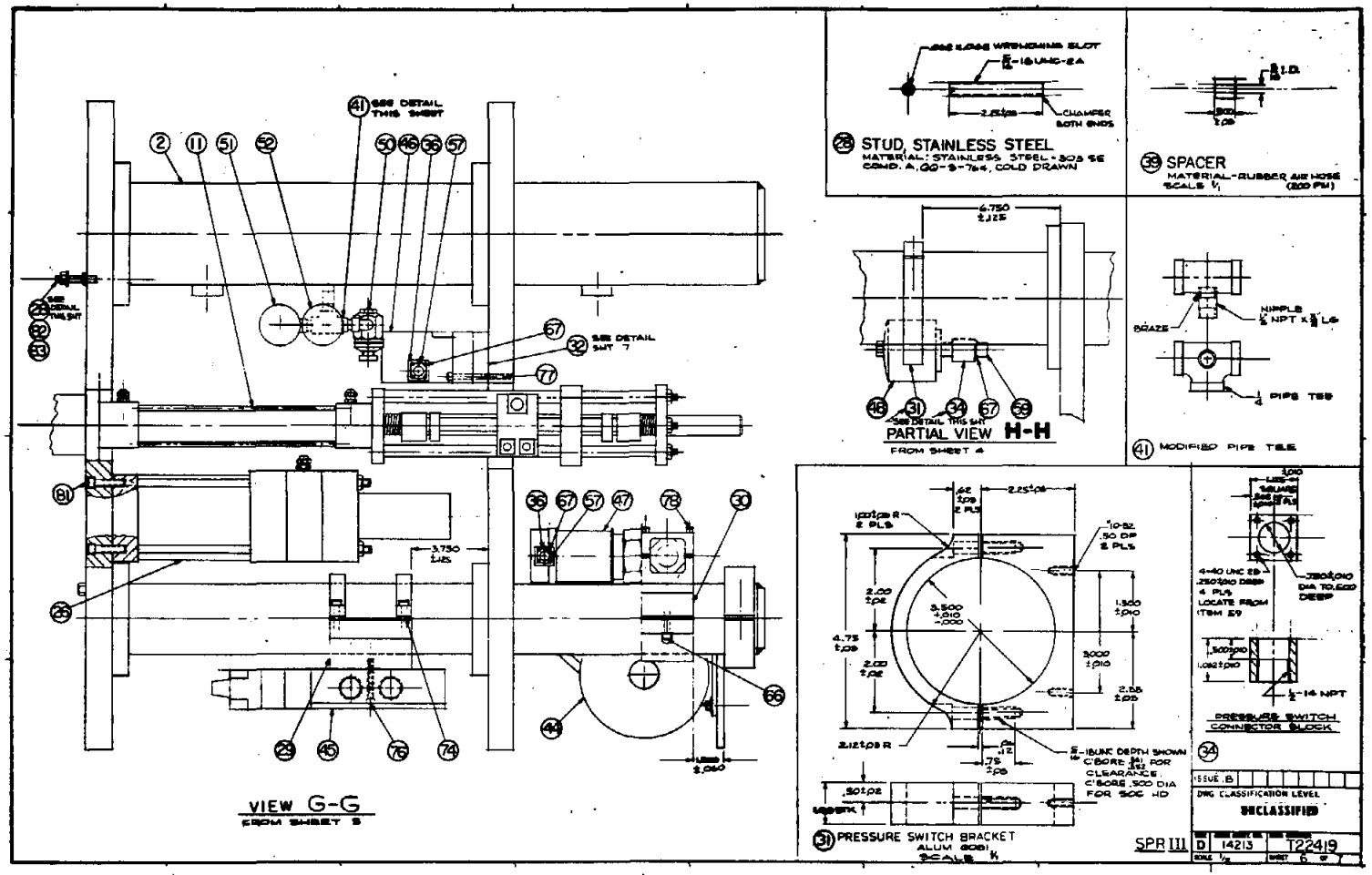
VIEW G-G
FROM SHEET 5
PARTIAL VIEW H-H
FROM SHEET 4
STUD, STAINLESS STEEL
SPACER
MODIFIED PIPE TEE
PRESSURE SWITCH BRACKET
PRESSURE SWITCH CONNECTOR BLOCK
SPR III
D 14213
T22419
UNCLASSIFIED

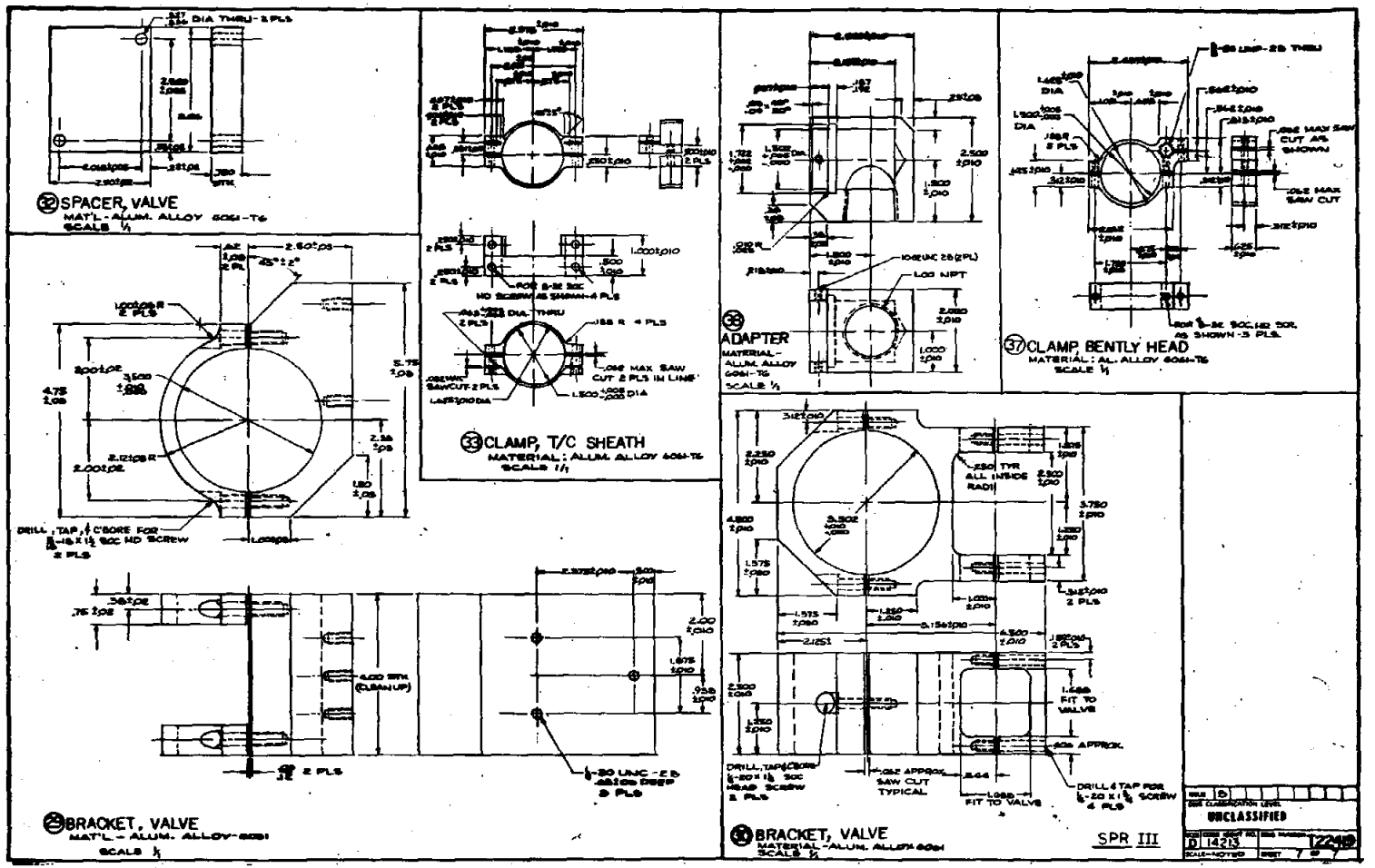
32 SPACER, VALVE
MAT'L - ALUM. ALLOY 6061-T6
SCALE 1/1
33 CLAMP, T/C SHEATH
MATERIAL: ALUM. ALLOY 6061-T6
SCALE 1/1
38 ADAPTER
MATERIAL - ALUM. ALLOY 6061-T6
SCALE 1/1
37 CLAMP, BENTLY HEAD
MATERIAL: AL. ALLOY 6061-T6
SCALE 1/1
29 BRACKET, VALVE
MAT'L - ALUM. ALLOY-6061
SCALE 1/1
30 BRACKET, VALVE
MATERIAL - ALUM. ALLOY 6061
SCALE 1/1
UNCLASSIFIED
SPR III
D 14213

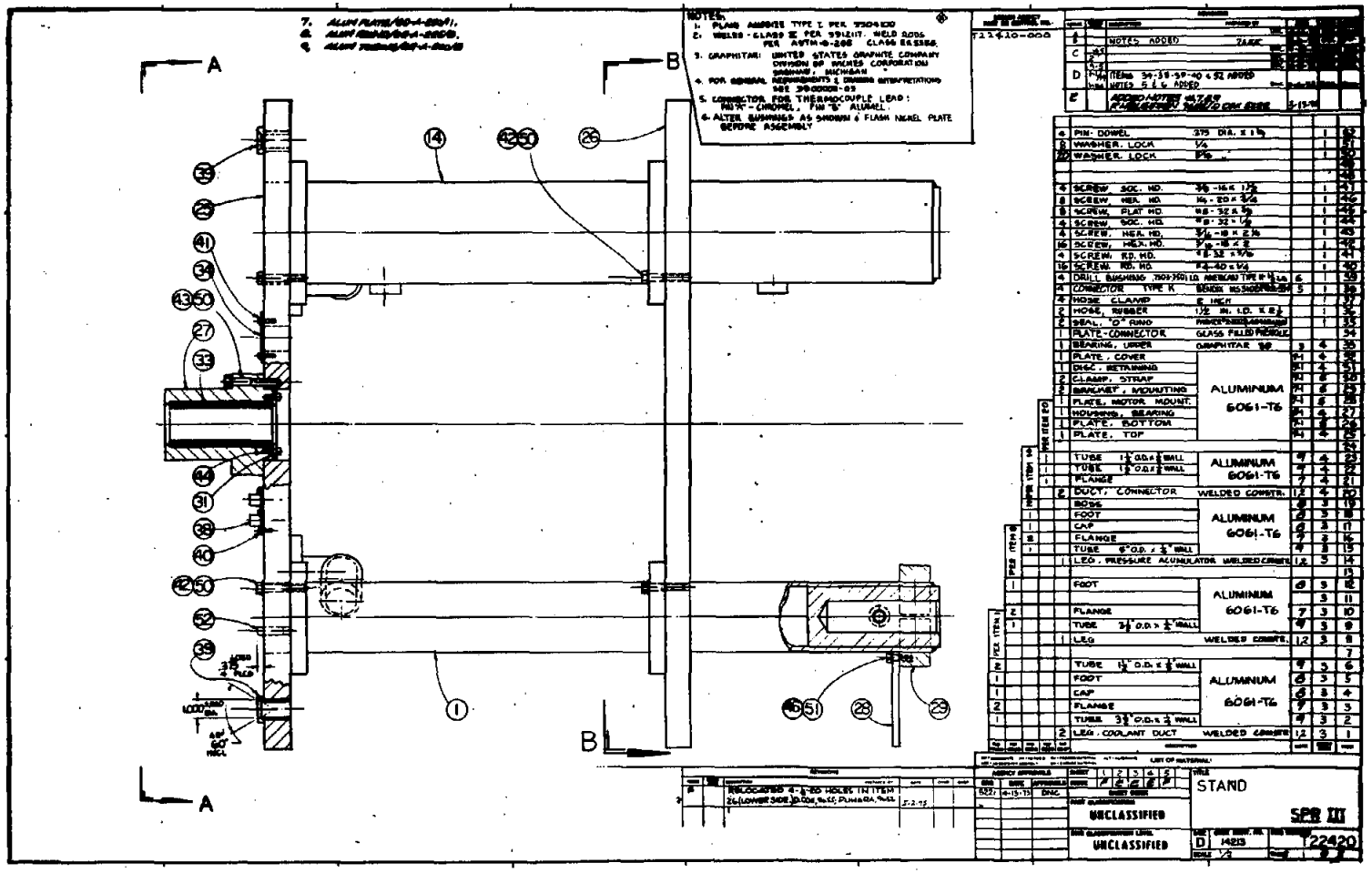
NOTES:
1. PLANE ANGLES TYPE I PER 7304100
2. WELDS - CLASS II PER 7912117. WELD DOSS PER ASTM-D-206 CLASS EE5356.
3. GRAPHITAR: UNITED STATES GRAPHITE COMPANY DIVISION OF MOHIKS CORPORATION SAGINAW, MICHIGAN
4. FOR GENERAL REQUIREMENTS & DRAWING INTERPRETATIONS SEE 39-00020-03
5. CONNECTOR FOR THERMOCOUPLE LEAD: NICR - CHROMEL, FIN "B" ALUMEL.
6. ALTER BUSHINGS AS SHOWN & FLASH NICKEL PLATE BEFORE ASSEMBLY
722410-000
NOTES ADDED
ITEMS 34-38-39-40 & 52 ADDED
NOTES 5 & 6 ADDED
PIN, DOWEL
WASHER, LOCK
SCREW, SOC. HD.
SCREW, HEX. HD.
SCREW, FLAT HD.
SCREW, SOC. HD.
SCREW, HEX. HD.
SCREW, HEX. HD.
SCREW, RD. HD.
SCREW, RD. HD.
DRILL BUSHING
CONNECTOR TYPE K
HOSE CLAMP
HOSE, RUBBER
SEAL, "O" RING
PLATE-CONNECTOR
BEARING, LINER
GRAPHITAR 98
PLATE, COVER
DISC, RETAINING
CLAMP, STRAP
BRACKET, MOUNTING
PLATE, MOTOR MOUNT
HOUSING, BEARING
PLATE, BOTTOM
PLATE, TOP
ALUMINUM 6061-T6
TUBE
FLANGE
DUCT, CONNECTOR
WELDED COMPTR.
BOSS
FOOT
CAP
LEG, PRESSURE ACCUMULATOR
LEG
LEG, COOLANT DUCT
UNCLASSIFIED
STAND
SPR III
22420

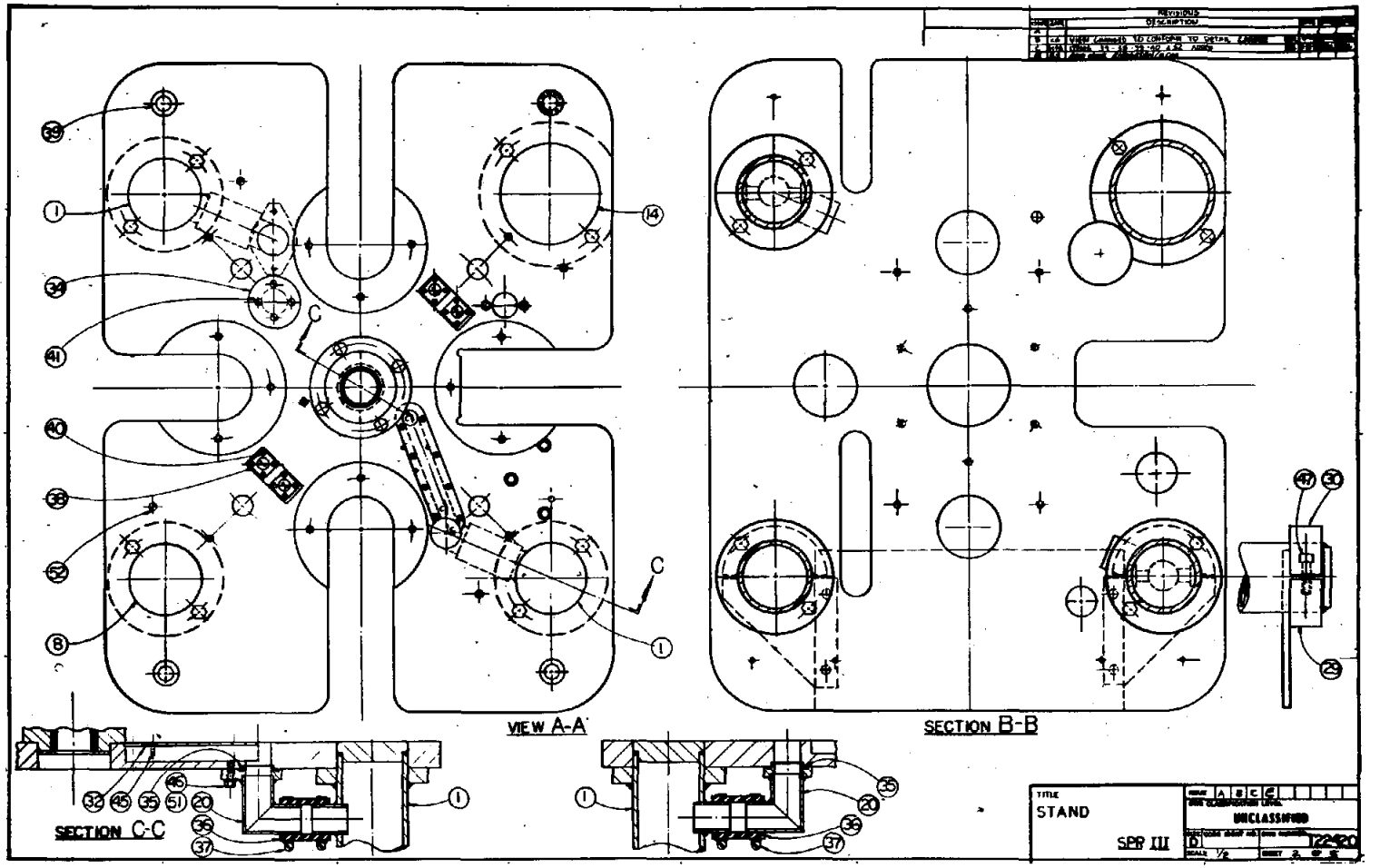
VIEW A-A
SECTION B-B
SECTION C-C
TITLE
STAND
SPP III
UNCLASSIFIED

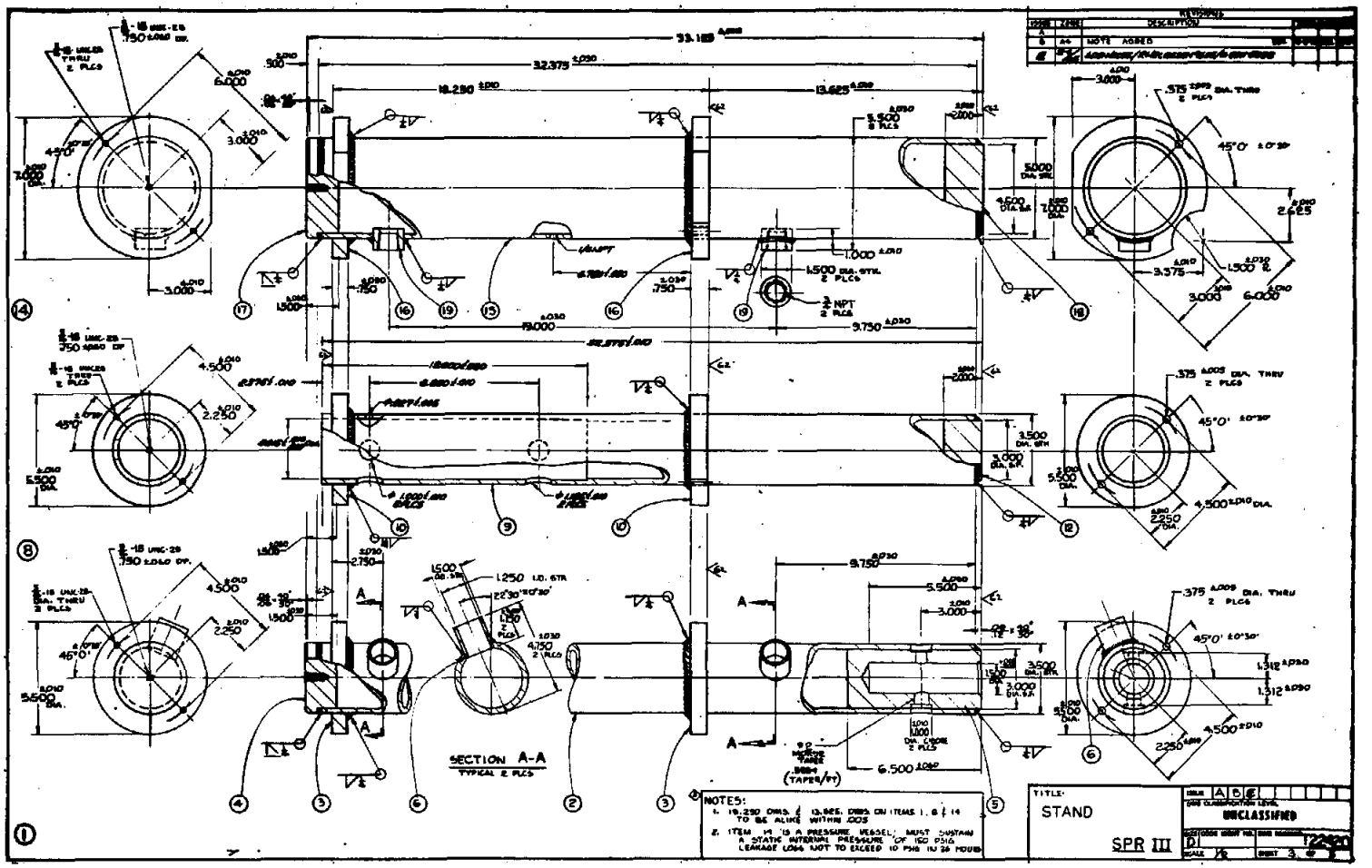
SECTION A-A
TYPICAL 2 PLCS
NOTES:
1. 19.250 DIMS. & 13.625 DIMS ON ITEMS 1, 8 & 14 TO BE ALIKE WITHIN .005
2. ITEM 14 IS A PRESSURE VESSEL; MUST SUSTAIN A STATIC INTERNAL PRESSURE OF 150 PSIG LEAKAGE LOSS NOT TO EXCEED 10 PSIG IN 24 HOURS
TITLE:
STAND
SPR III
UNCLASSIFIED

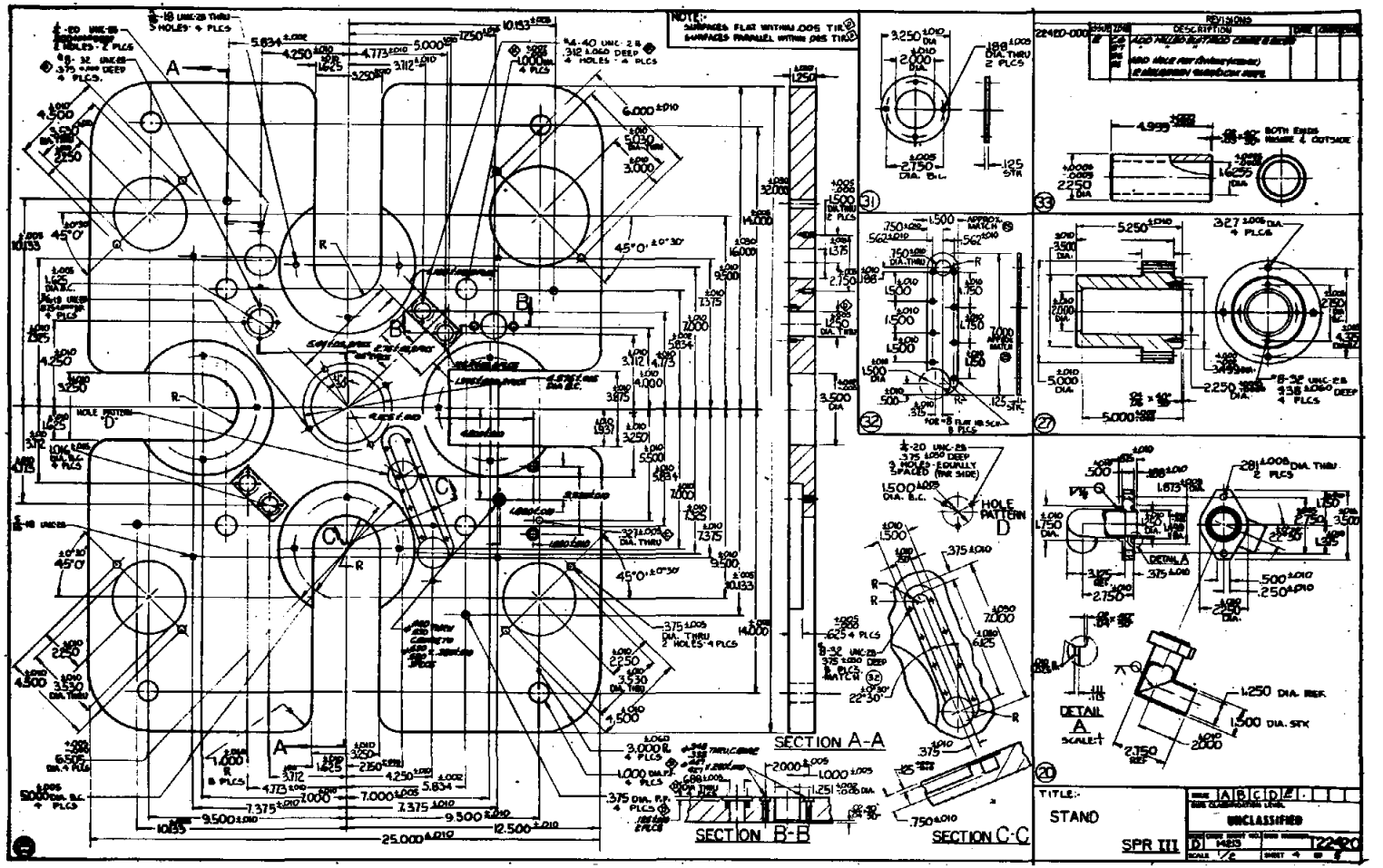
SECTION A-A
SECTION B-B
SECTION C-C
DETAIL A
HOLE PATTERN D
TITLE:
STAND
SPR III
UNCLASSIFIED
REVISIONS
DESCRIPTION
22420-000
25.000
12.500
9.500
7.375
7.000
6.000
5.000
4.500
4.250
3.250
2.750
2.250
1.500
1.250
1.000
.500
.375
.250
.125
45°0'
22°30'

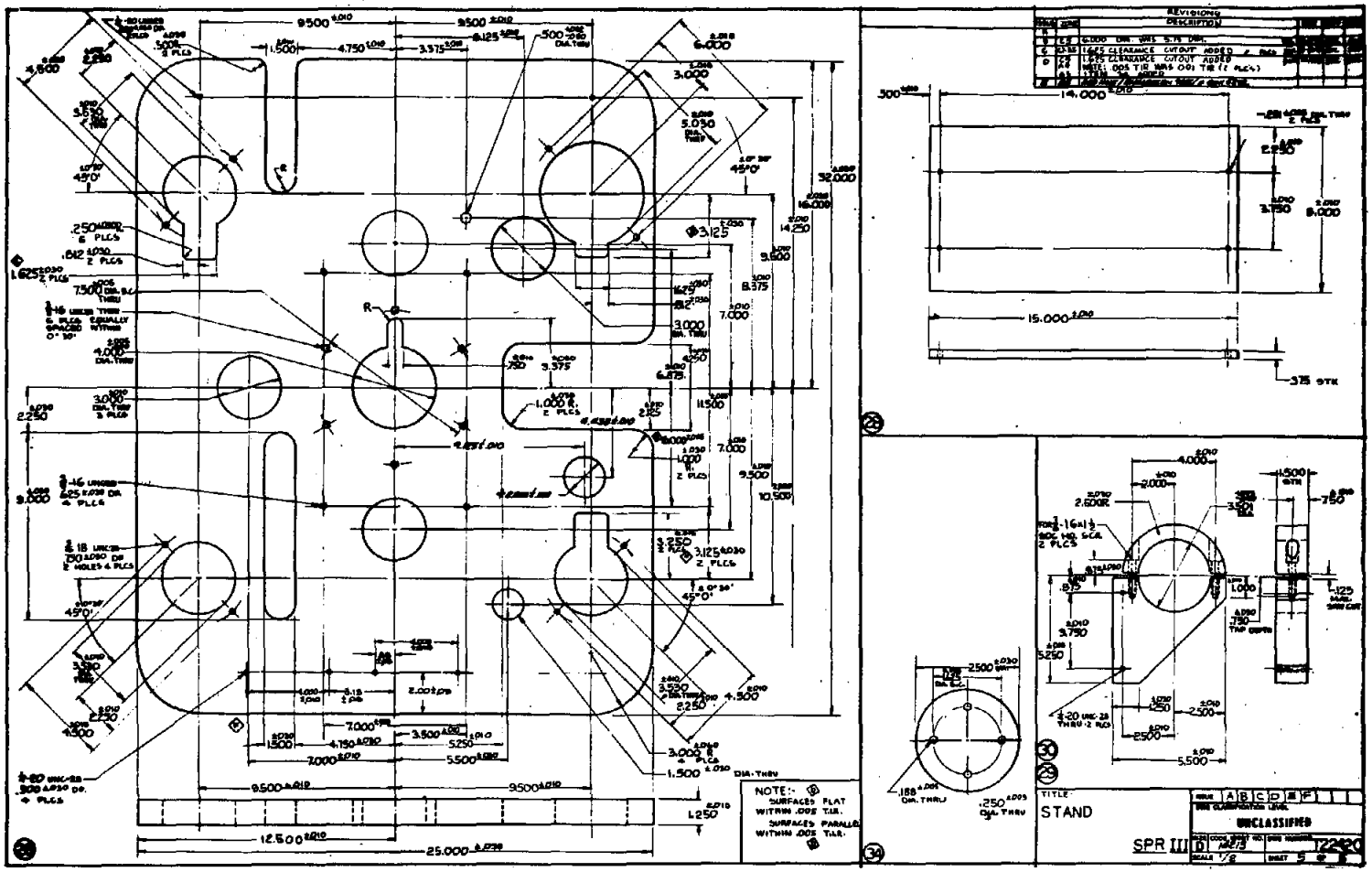
REVISIONS
DESCRIPTION
NOTE:
SURFACES FLAT WITHIN .005 T.I.R.
SURFACES PARALLEL WITHIN .005 T.I.R.
TITLE
STAND
SPR III
UNCLASSIFIED
SCALE 1/2
SHEET 5 OF 8

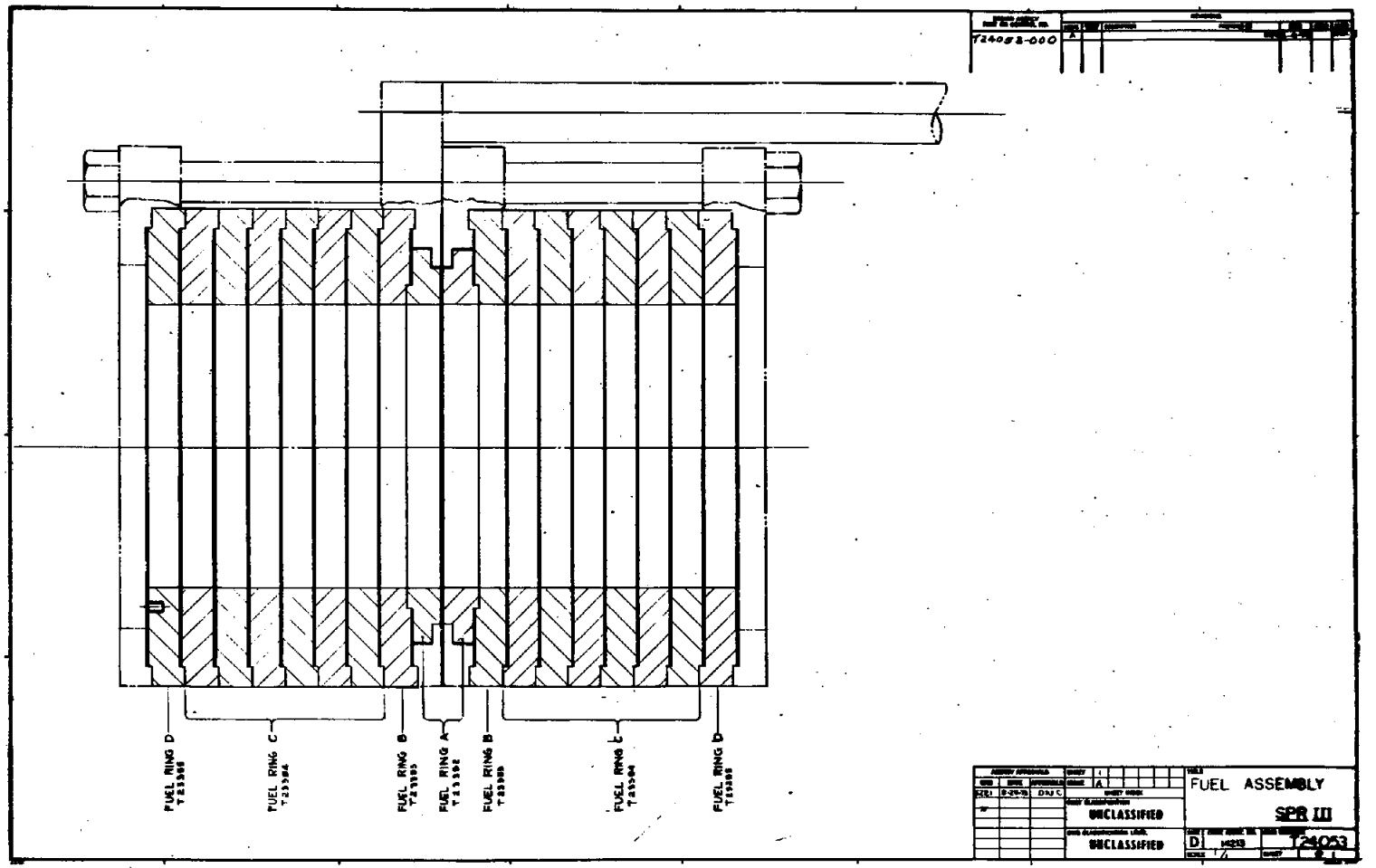
T24052-000
FUEL RING D
T23588
FUEL RING C
T23584
FUEL RING B
T23585
FUEL RING A
T23582
FUEL RING B
T23585
FUEL RING C
T23584
FUEL RING D
T23588
UNCLASSIFIED
UNCLASSIFIED
FUEL ASSEMBLY
SPR III
D
T24053

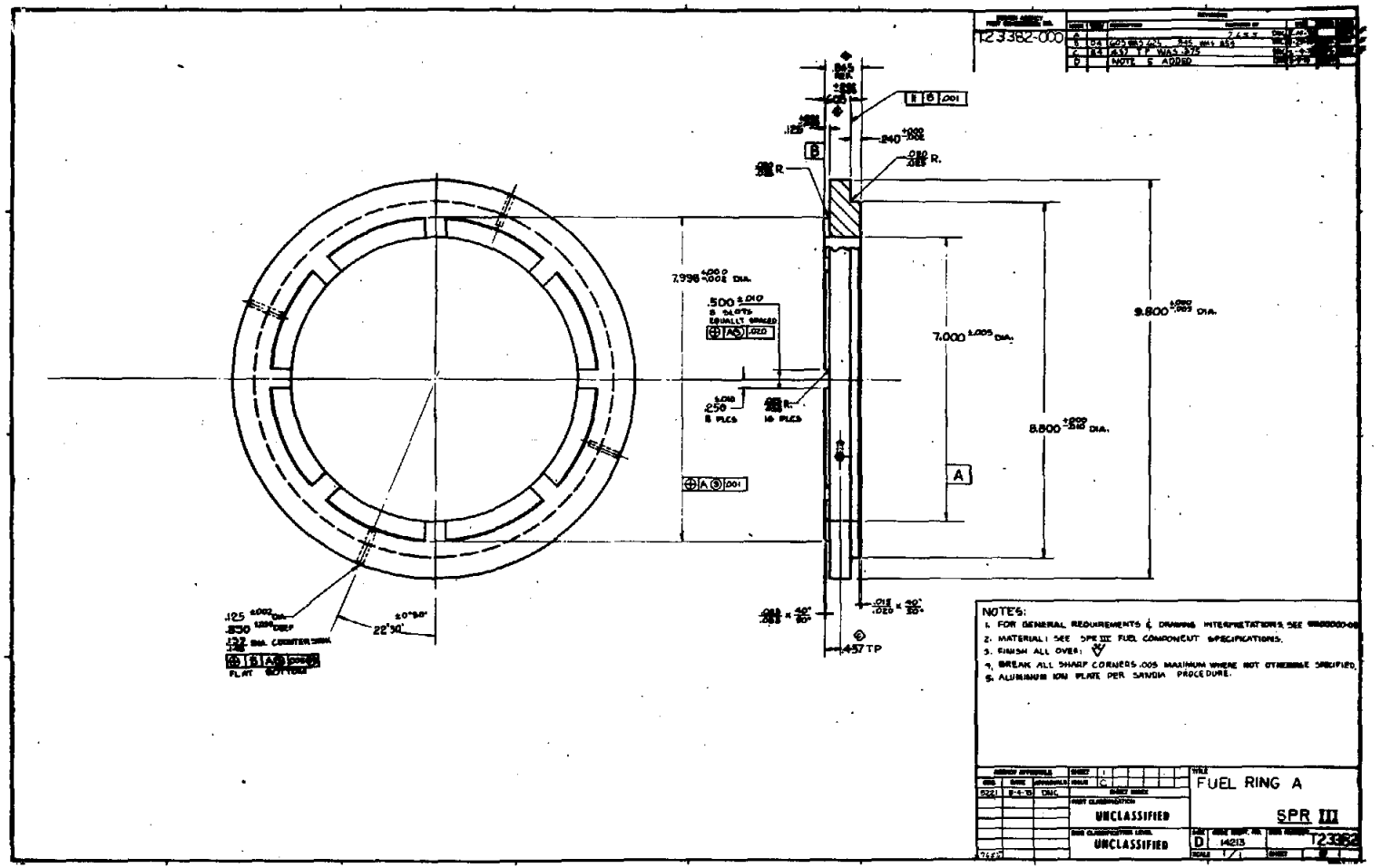
123382-000
NOTE 5 ADDED
7.998 DIA.
.500 ±.010
8 SLOTS EQUALLY SPACED
.250
8 PLCS
10 PLCS
7.000 DIA.
8.800 DIA.
9.800 DIA.
.240
.125
.457 TP
22°30'
FLAT BOTTOM
NOTES:
1. FOR GENERAL REQUIREMENTS & DRAWING INTERPRETATIONS, SEE
2. MATERIAL: SEE SPR III FUEL COMPONENT SPECIFICATIONS.
3. FINISH ALL OVER:
4. BREAK ALL SHARP CORNERS .005 MAXIMUM WHERE NOT OTHERWISE SPECIFIED.
5. ALUMINUM ION PLATE PER SANDIA PROCEDURE.
FUEL RING A
SPR III
UNCLASSIFIED
UNCLASSIFIED
D
14213
123382

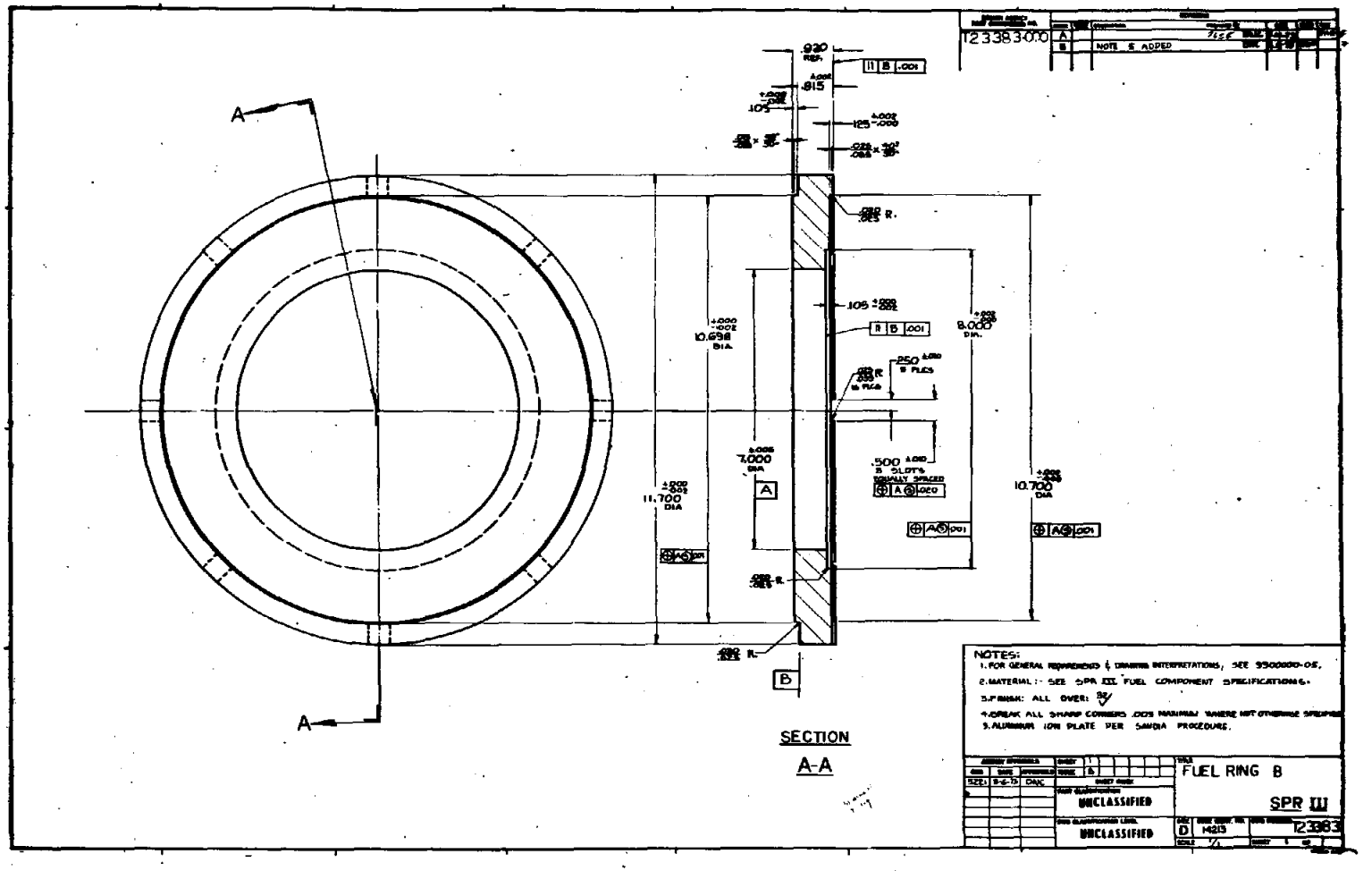
12338300
NOTE 5 ADDED
.920 REF.
.815
.105
.125
.105
10.698 DIA.
8.000 DIA.
.250 9 PLCS
.500 9 SLOTS EQUALLY SPACED
7.000 DIA
11.700 DIA
10.700 DIA
SECTION
A-A
NOTES:
1. FOR GENERAL REQUIREMENTS & DRAWING INTERPRETATIONS, SEE 9500000-05.
2. MATERIAL :- SEE SPR III FUEL COMPONENT SPECIFICATIONS.
3. FINISH: ALL OVER:
4. BREAK ALL SHARP CORNERS .005 MAXIMUM WHERE NOT OTHERWISE SPECIFIED
5. ALUMINUM IRON PLATE PER SANDIA PROCEDURE.
FUEL RING B
SPR III
UNCLASSIFIED
UNCLASSIFIED
D
M213
12338

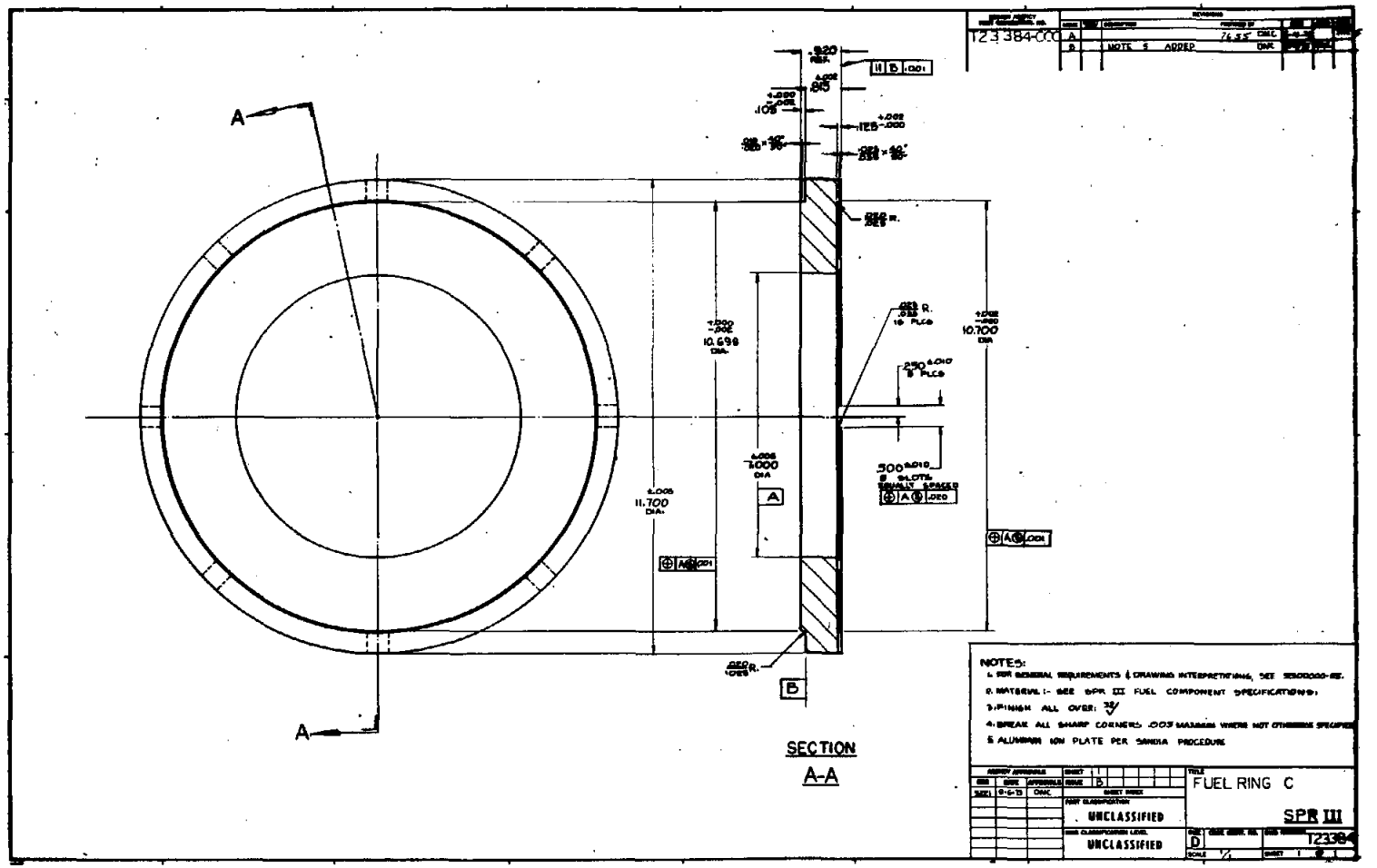
T23384-000
A
B
NOTE 5 ADDED
SECTION
A-A
NOTES:
1. FOR GENERAL REQUIREMENTS & DRAWING INTERPRETATIONS, SEE
2. MATERIAL :- SEE SPR III FUEL COMPONENT SPECIFICATIONS.
3. FINISH ALL OVER:
4. BREAK ALL SHARP CORNERS .005 MAXIMUM WHERE NOT OTHERWISE SPECIFIED
5. ALUMINUM ION PLATE PER SANDIA PROCEDURE
FUEL RING C
SPR III
UNCLASSIFIED
UNCLASSIFIED
T23384

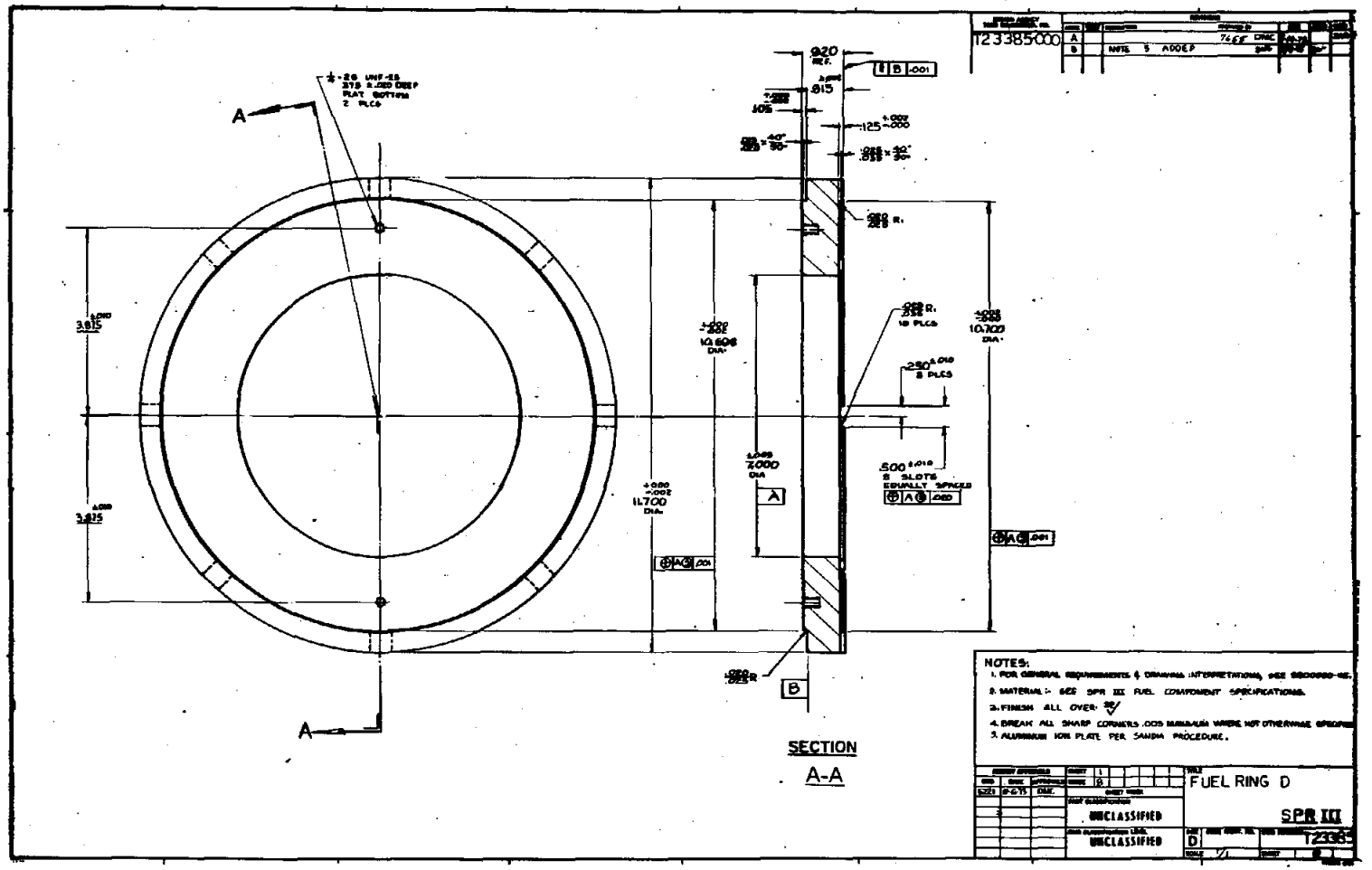
123385000
A
B
NOTE 5 ADDED
A
A
.920 REF.
.815
.125
.250 8 PLCS
.500 8 SLOTS EQUALLY SPACED
10.606 DIA.
10.700 DIA.
11.700 DIA.
7.000 DIA
3.815
3.815
SECTION
A-A
NOTES:
1. FOR GENERAL REQUIREMENTS & DRAWING INTERPRETATIONS, SEE
2. MATERIAL :- SEE SPR III FUEL COMPONENT SPECIFICATIONS.
3. FINISH ALL OVER
4. BREAK ALL SHARP CORNERS .005 MINIMUM UNLESS NOT OTHERWISE
5. ALUMINUM IONS PLATE PER SANDIA PROCEDURE.
FUEL RING D
SPR III
UNCLASSIFIED
UNCLASSIFIED
D

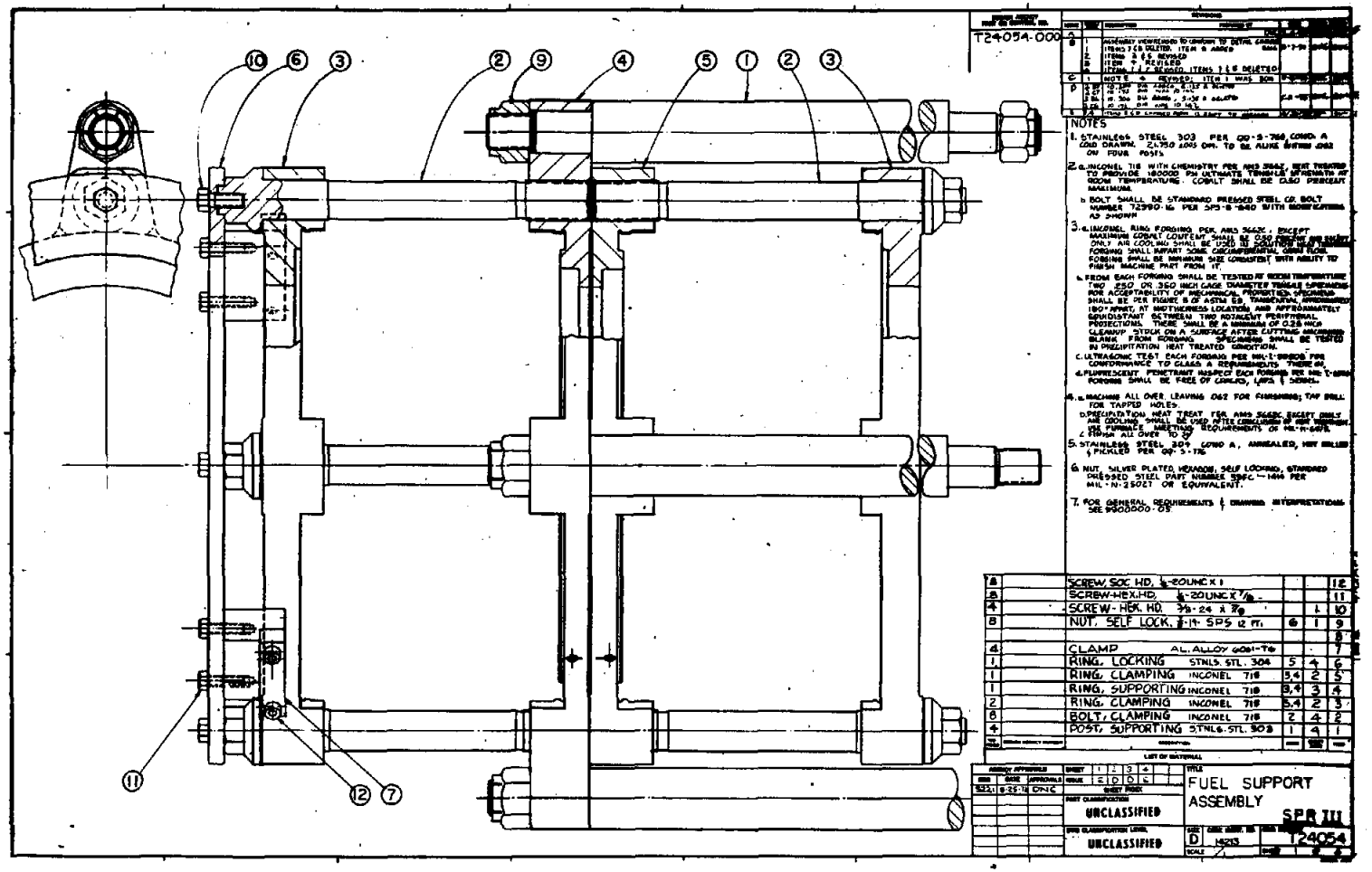
T24054-000
NOTES
1. STAINLESS STEEL 303 PER QQ-S-766, COND. A COLD DRAWN.
2. INCONEL 718 WITH CHEMISTRY PER AMS 5662, HEAT TREATED TO PROVIDE 180000 PSI ULTIMATE TENSILE STRENGTH AT ROOM TEMPERATURE.
3. INCONEL RING FORGING PER AMS 5662K.
4. FROM EACH FORGING SHALL BE TESTED AT ROOM TEMPERATURE
5. STAINLESS STEEL 304 COND A, ANNEALED, HOT ROLLED & PICKLED PER QQ-S-716
6. NUT, SILVER PLATED, HEXAGON, SELF LOCKING, STANDARD DRESSED STEEL PART NUMBER 33FC-1414 PER MIL-N-25027 OR EQUIVALENT.
7. FOR GENERAL REQUIREMENTS & DRAWING INTERPRETATION SEE 9900000-05.
SCREW SOC. HD. 1/4-20UNC X 1
SCREW-HEX.HD. 1/4-20UNC X 7/8
SCREW-HEX. HD. 7/8-24 X 7/8
NUT, SELF LOCK, 3/4-14 SPS 12 PT.
CLAMP AL. ALLOY 6061-T6
RING, LOCKING STNLS. STL. 304
RING, CLAMPING INCONEL 718
RING, SUPPORTING INCONEL 718
RING, CLAMPING INCONEL 718
BOLT, CLAMPING INCONEL 718
POST, SUPPORTING STNLS. STL. 303
LIST OF MATERIAL
FUEL SUPPORT ASSEMBLY
SPR III
UNCLASSIFIED
UNCLASSIFIED
T24054

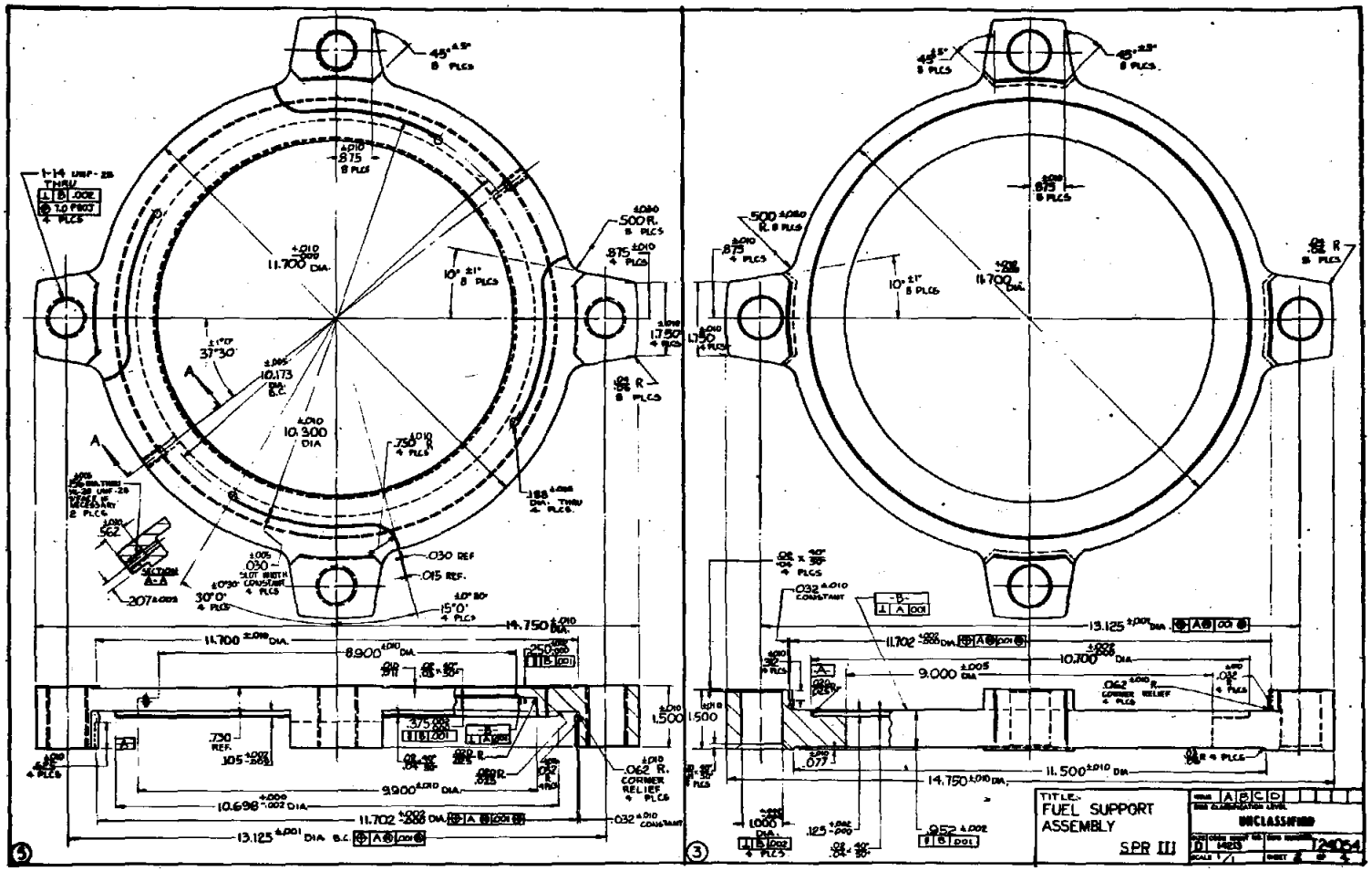
TITLE:-
FUEL SUPPORT
ASSEMBLY
SPR III
UNCLASSIFIED

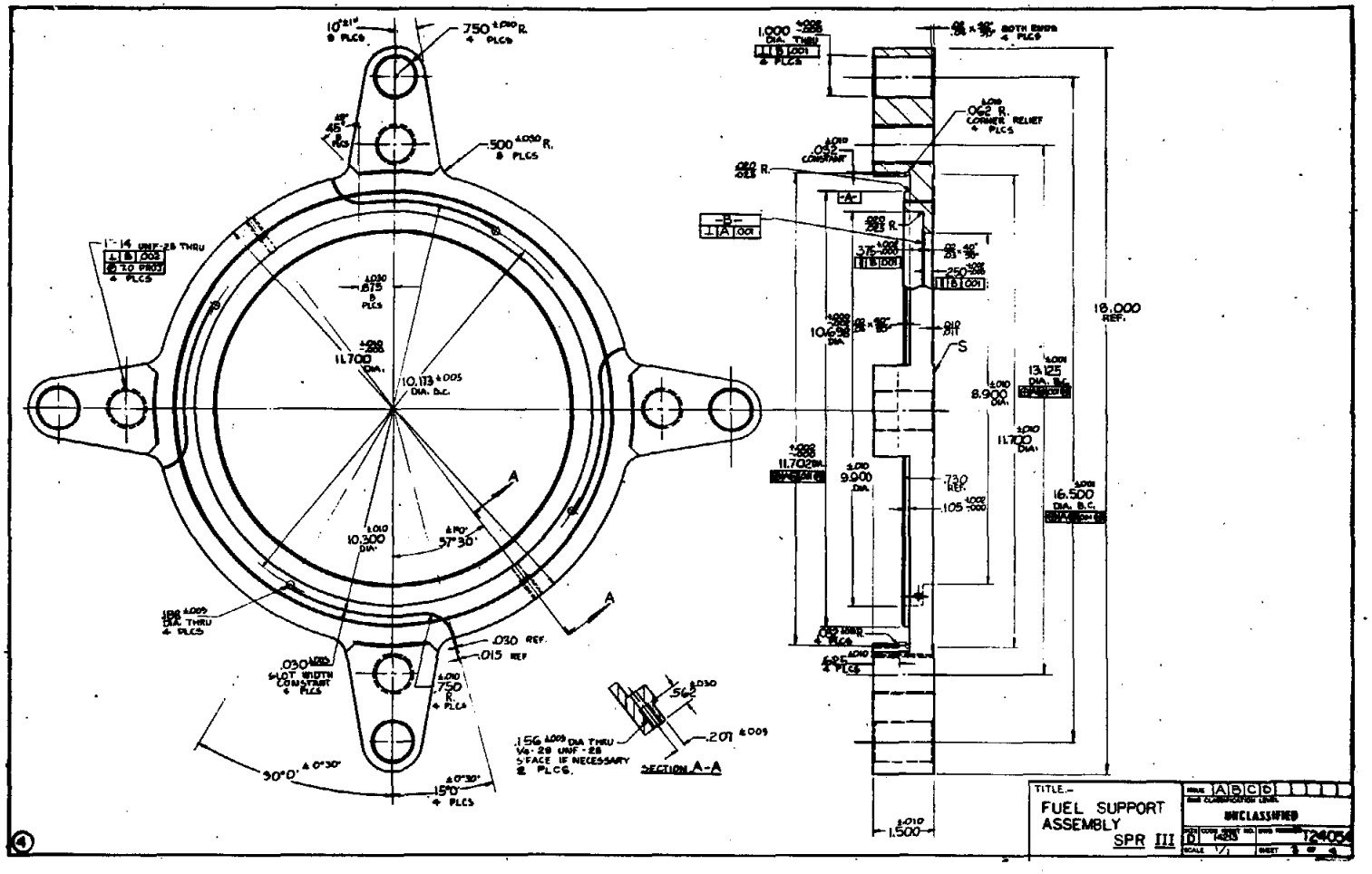
TITLE.-
FUEL SUPPORT ASSEMBLY
SPR III
UNCLASSIFIED
124054
SECTION A-A
18.000 REF.
16.500 DIA. B.C.
13.125 DIA. B.C.
10.113 DIA. B.C.
11.700 DIA.
10.300 DIA.
8.900 DIA.
9.900 DIA.
1.500

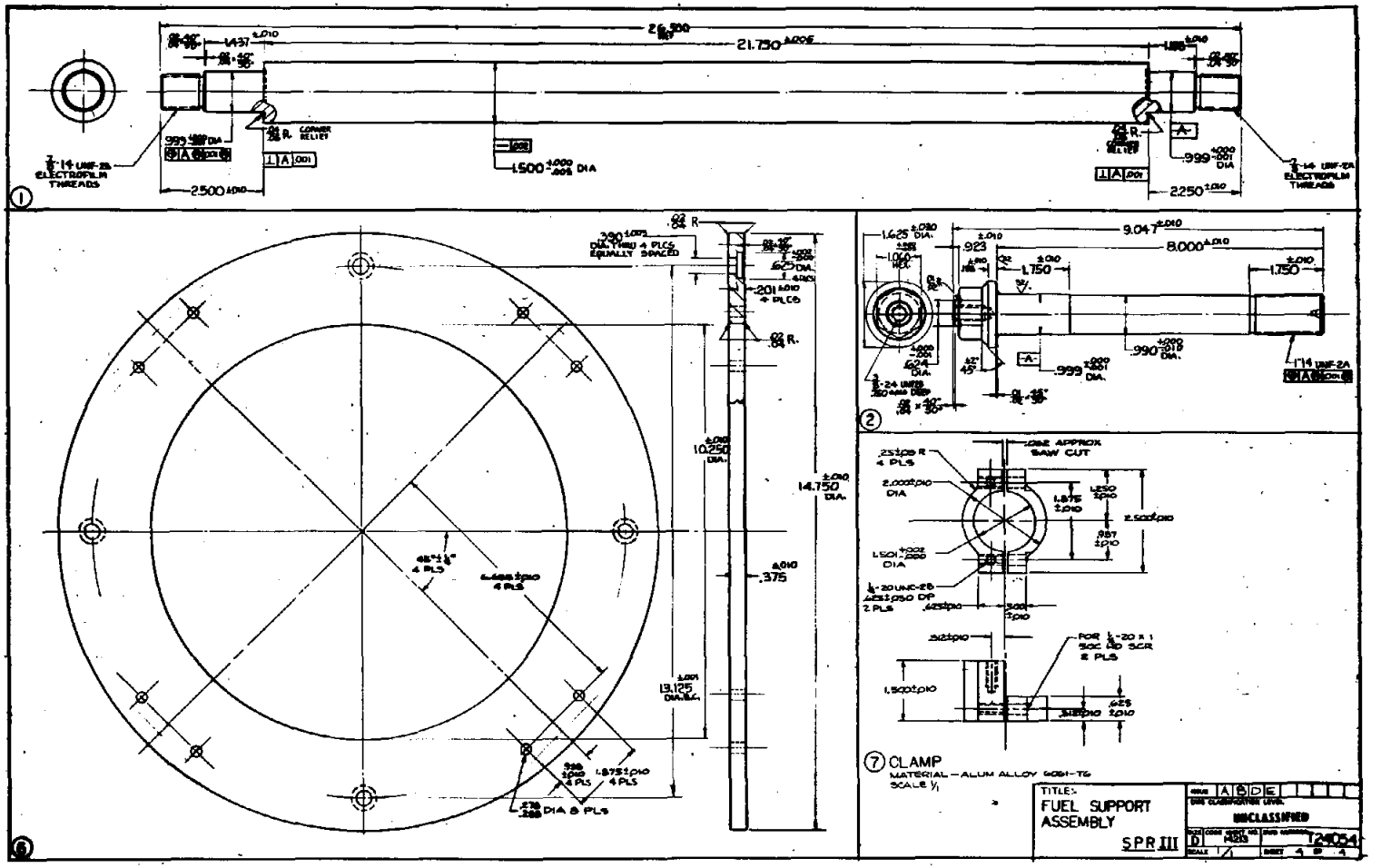
21.750
2.500
2.250
1.500 DIA
.999 DIA
1.437
LOWER RELIEF
ELECTROPLIN THREADS
10.250 DIA
14.750 DIA
13.125 DIA
.375
.201
.625 DIA
.390 DIA THRU 4 PLCS EQUALLY SPACED
4 PLCS
9.047
8.000
1.750
1.625 DIA
.923
.990 DIA
.999 DIA
1"-14 UNF-2A
.25±.010 R
4 PLS
2.000±.010 DIA
1.875 ±.010
2.500±.010
.987 ±.010
1.501 DIA
1/4-20 UNC-2B
2 PLS
.312±.010
1.500±.010
.625 ±.010
FOR 1/4-20 x 1 SOC HD SCR
2 PLS
ONE APPROX SAW CUT
CLAMP
MATERIAL—ALUM ALLOY 6061-T6
SCALE 1/1
TITLE:
FUEL SUPPORT ASSEMBLY
SPR III
UNCLASSIFIED
D
T24054
SHEET 4 OF 4

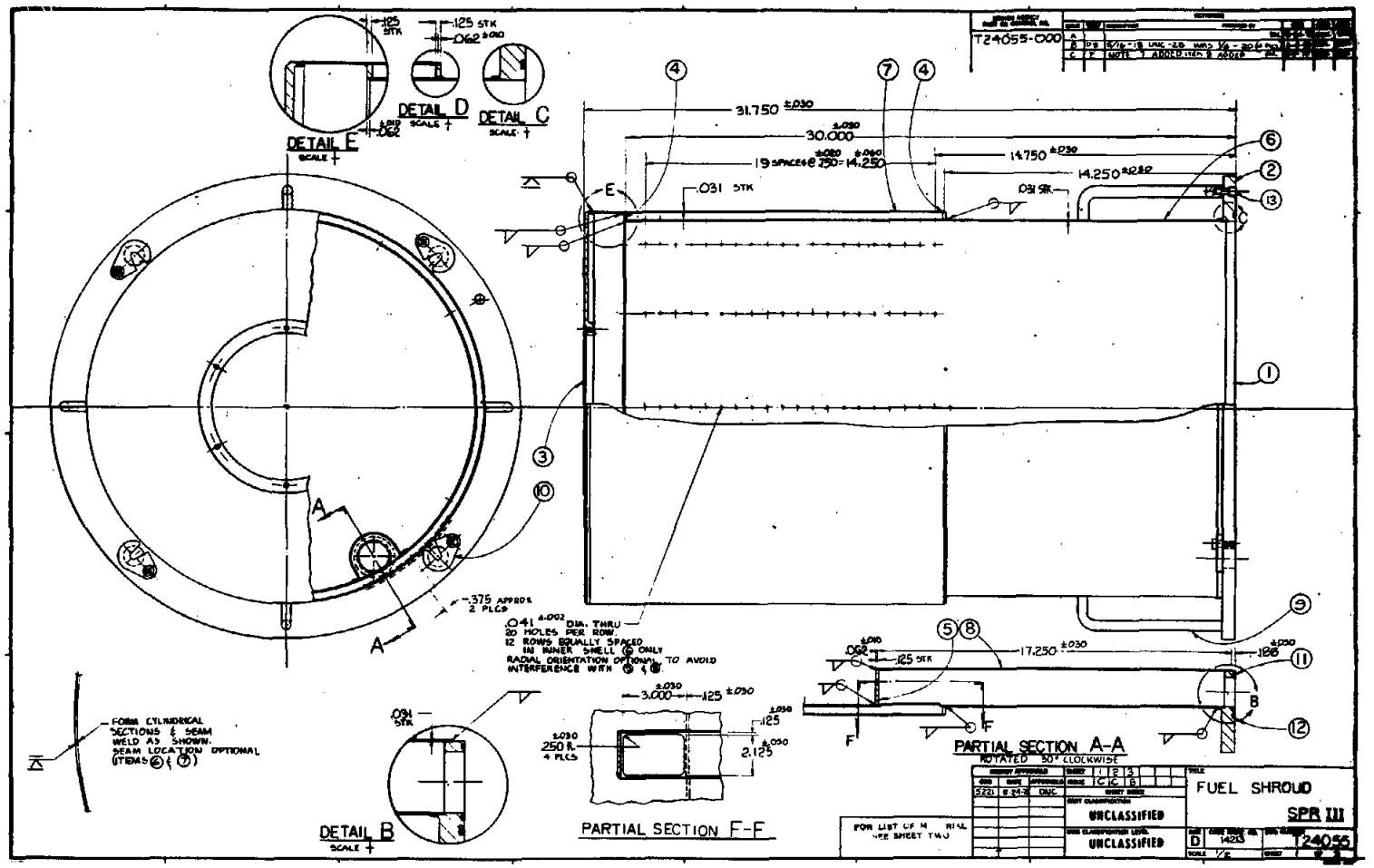
T24055-000
DETAIL E
SCALE +
DETAIL D
SCALE +
DETAIL C
SCALE +
31.750 ±.030
30.000 ±.030
19 SPACES @ .750 = 14.250 ±.020 ±.060
14.750 ±.030
14.250 ±.030
.031 STK
.125 STK
.062 ±.010
.375 APPROX 2 PLCS
.041 +.002 DIA. THRU
20 HOLES PER ROW.
12 ROWS EQUALLY SPACED IN INNER SHELL ⑥ ONLY
RADIAL ORIENTATION OPTIONAL TO AVOID INTERFERENCE WITH ⑤ & ⑧.
FORM CYLINDRICAL SECTIONS & SEAM WELD AS SHOWN. SEAM LOCATION OPTIONAL (ITEMS ⑥ & ⑦)
DETAIL B
SCALE +
3.000 ±.030
.125 ±.030
250 R ±.030
4 PLCS
2.125 ±.030
PARTIAL SECTION F-F
17.250 ±.030
PARTIAL SECTION A-A
ROTATED 90° CLOCKWISE
FOR LIST OF MATERIAL SEE SHEET TWO
FUEL SHROUD
SPR III
UNCLASSIFIED
UNCLASSIFIED
D
T24055

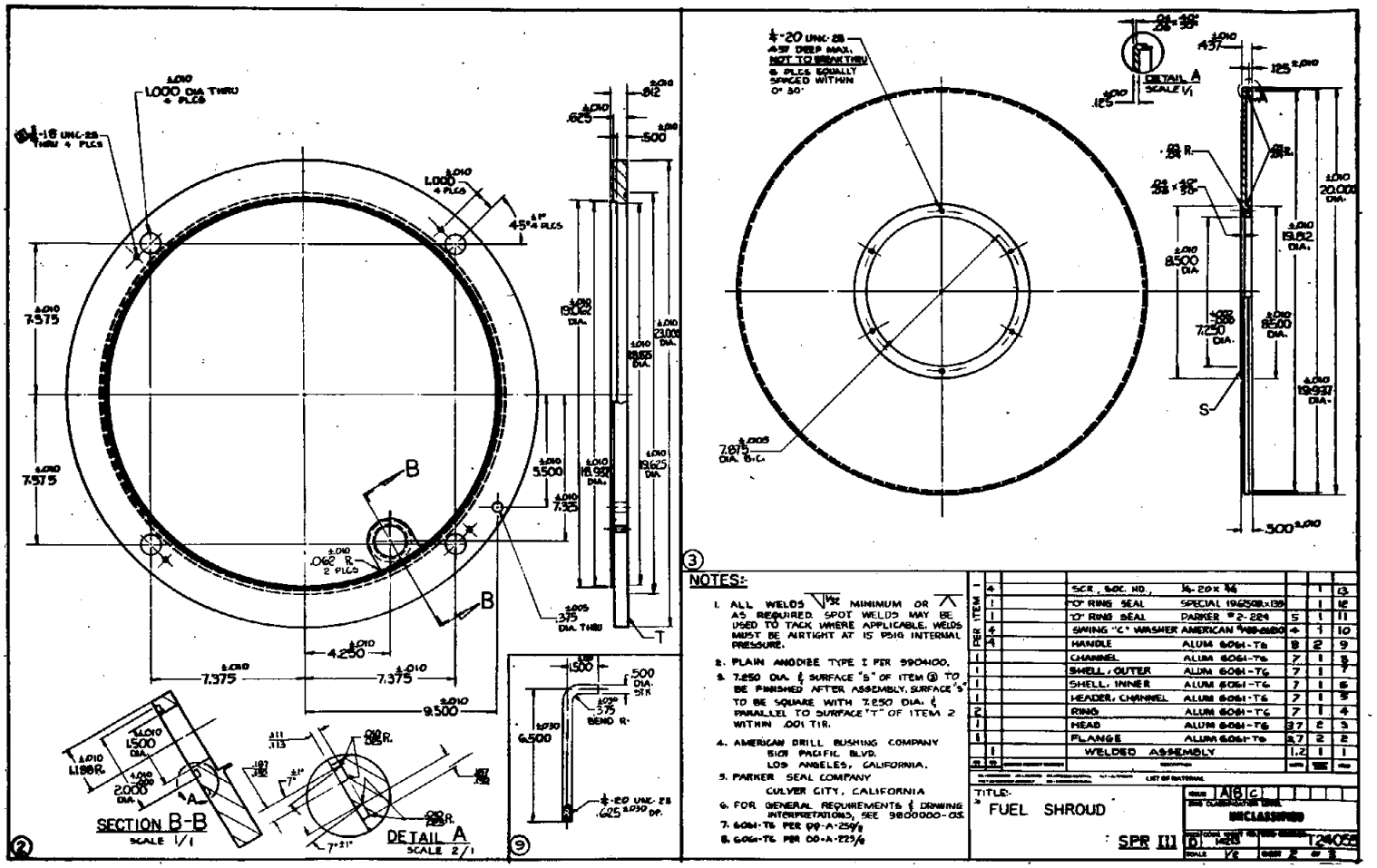
SECTION B-B
SCALE 1/1
DETAIL A
SCALE 2/1
DETAIL A
SCALE 1/1
NOTES:-
1. ALL WELDS MINIMUM OR AS REQUIRED. SPOT WELDS MAY BE USED TO TACK WHERE APPLICABLE. WELDS MUST BE AIRTIGHT AT 15 PSIG INTERNAL PRESSURE.
2. PLAIN ANODIZE TYPE I PER 99-A-100.
3. 7.250 DIA. & SURFACE "S" OF ITEM 3 TO BE FINISHED AFTER ASSEMBLY. SURFACE "S" TO BE SQUARE WITH 7.250 DIA. & PARALLEL TO SURFACE "T" OF ITEM 2 WITHIN .001 TIR.
4. AMERICAN DRILL BUSHING COMPANY 5101 PACIFIC BLVD. LOS ANGELES, CALIFORNIA.
5. PARKER SEAL COMPANY CULVER CITY, CALIFORNIA
6. FOR GENERAL REQUIREMENTS & DRAWING INTERPRETATIONS, SEE 9800000-05
7. 6061-T6 PER 99-A-250/6
8. 6061-T6 PER 00-A-225/6
TITLE:-
FUEL SHROUD
SPR III
UNCLASSIFIED
T24055

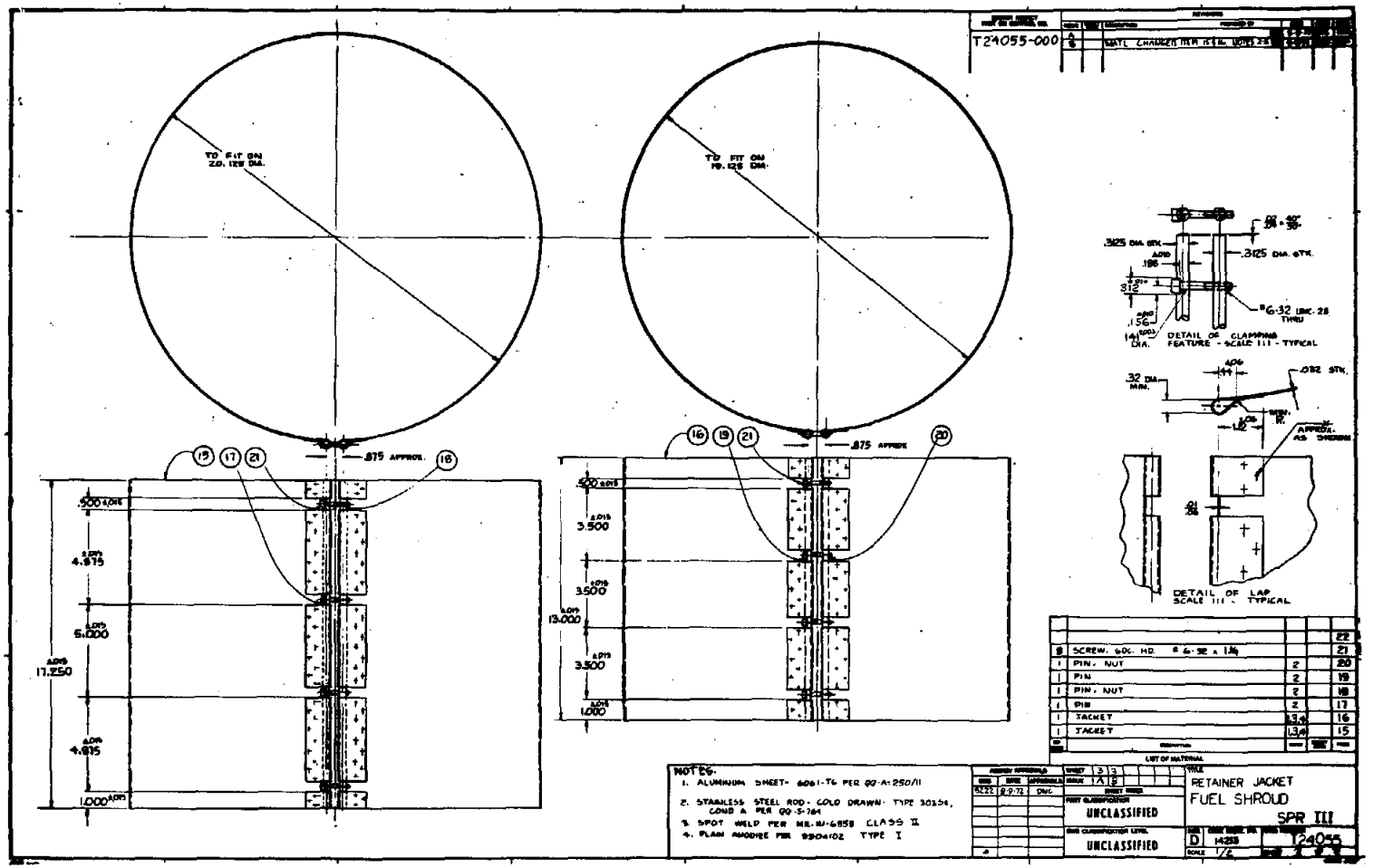
T24055-000
TO FIT ON 20.125 DIA.
TO FIT ON 19.125 DIA.
.875 APPROX.
.875 APPROX.
17.250
4.875
5.000
4.875
1.000
13.000
3.500
3.500
3.500
1.000
.3125 DIA. STK.
.3125 DIA. STK.
#6-32 UNC-2B THRU
DETAIL OF CLAMPING FEATURE - SCALE 1:1 - TYPICAL
.032 STK.
APPROX. AS SHOWN
DETAIL OF LAP SCALE 1:1 - TYPICAL
SCREW, 60° HD. #6-32 x 1¼
PIN, NUT
PIN
PIN, NUT
PIN
JACKET
JACKET
LIST OF MATERIAL
NOTES:
1. ALUMINUM SHEET- 6061-T6 PER QQ-A-250/11
2. STAINLESS STEEL ROD- COLD DRAWN- TYPE 303SE, COND A PER QQ-S-764
3. SPOT WELD PER MIL-W-6858 CLASS II
4. PLAIN ANODIZE PER 93D4102 TYPE I
UNCLASSIFIED
UNCLASSIFIED
RETAINER JACKET
FUEL SHROUD
SPR III
D
14233
1/2
T24055

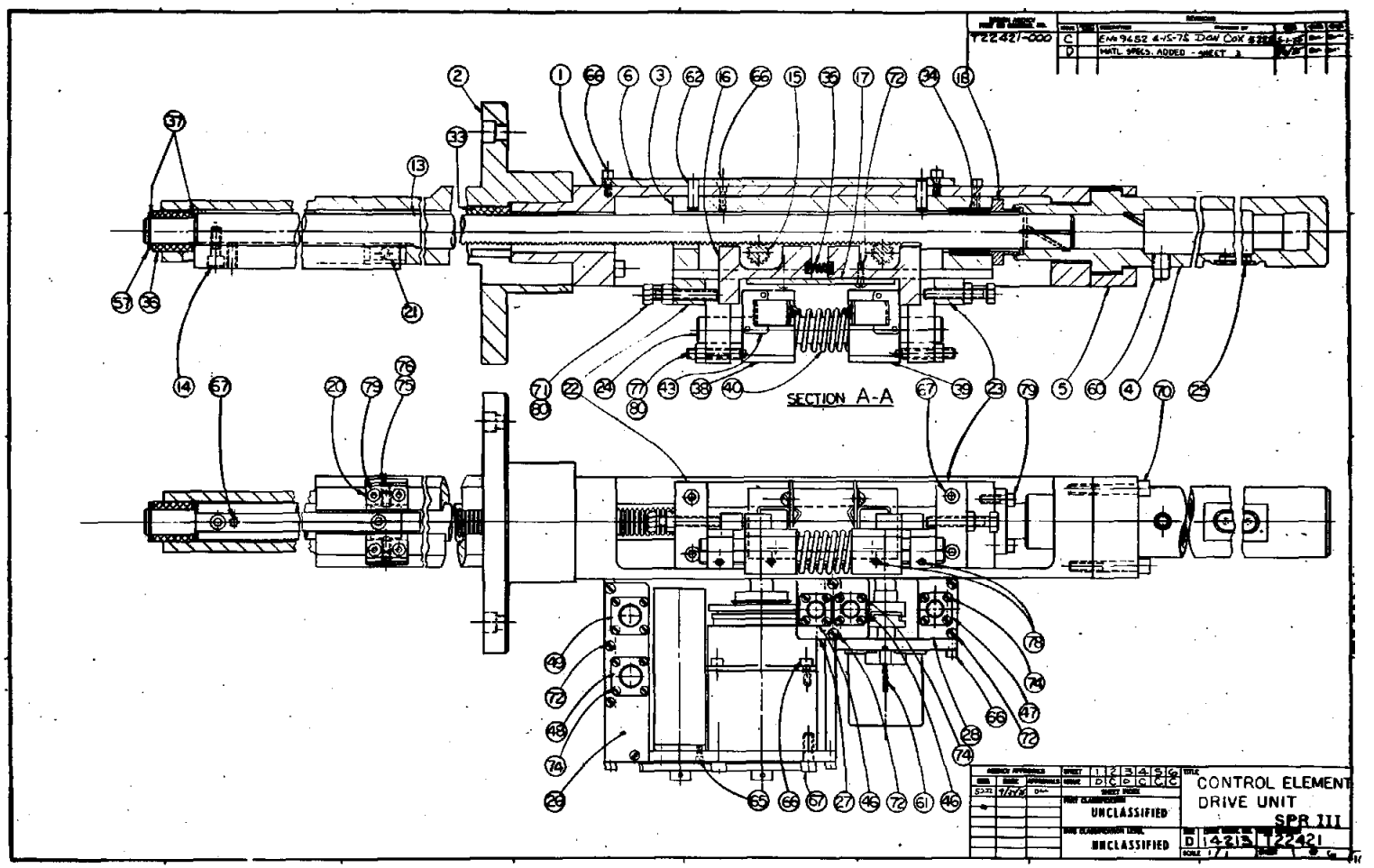
T2242/-000
C
D
MATL SPECS. ADDED - SHEET 3
SECTION A-A
CONTROL ELEMENT
DRIVE UNIT
SPR III
UNCLASSIFIED
UNCLASSIFIED
D 14213 T2242/

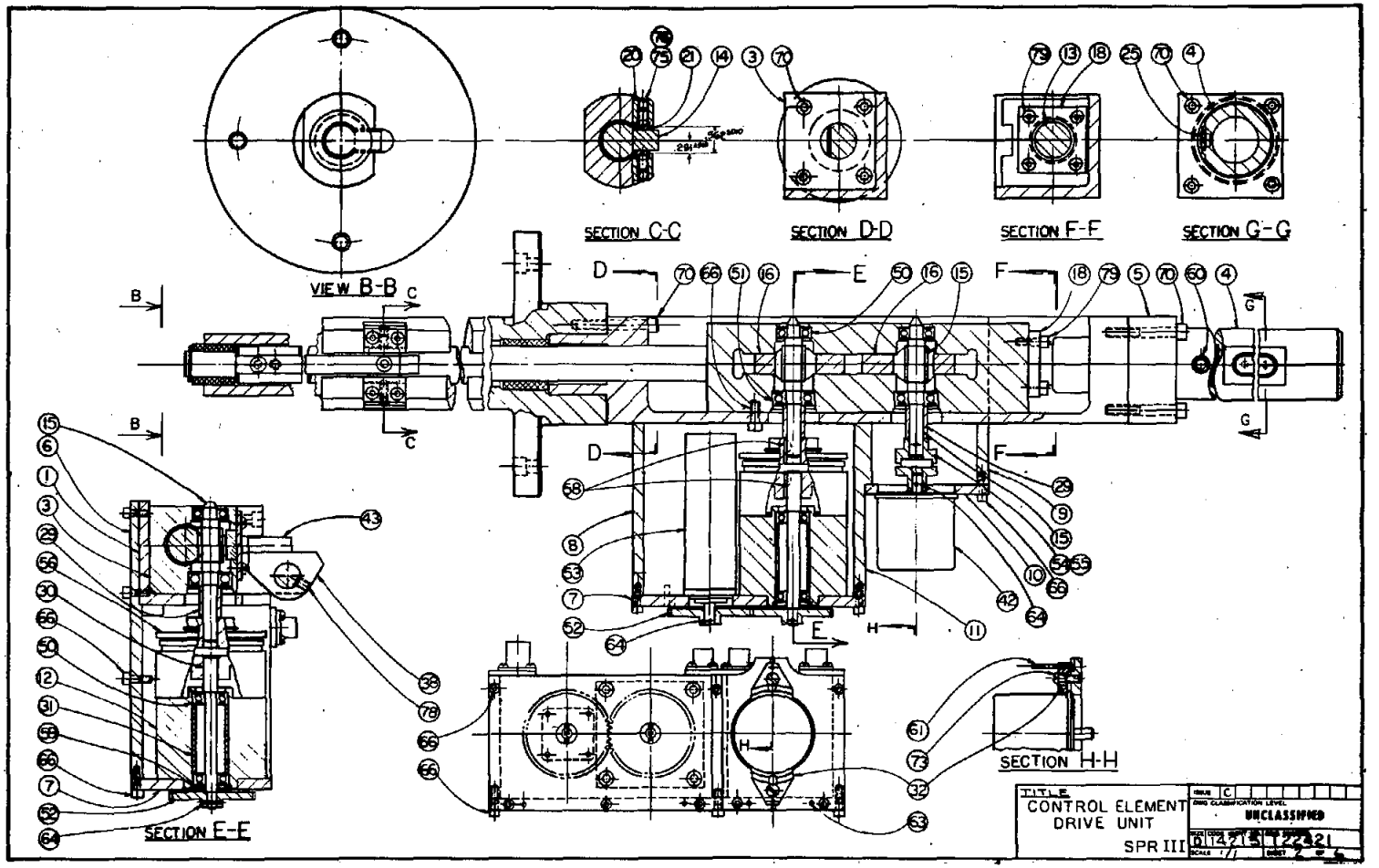
VIEW B-B
SECTION C-C
SECTION D-D
SECTION F-F
SECTION G-G
SECTION E-E
SECTION H-H
TITLE
CONTROL ELEMENT
DRIVE UNIT
SPR III
UNCLASSIFIED

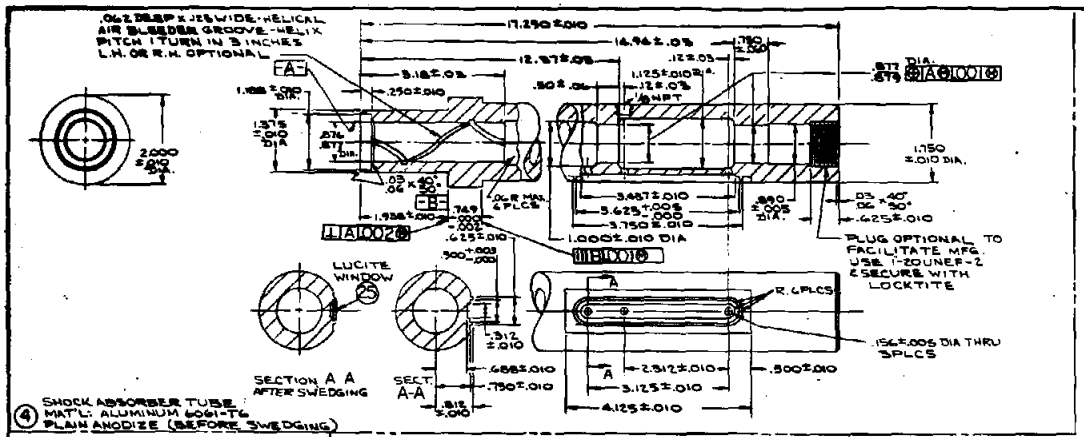

④ SHOCK ABSORBER TUBE. MAT'L: ALUMINUM 6061-T6 PLAIN ANODIZE (BEFORE SWEDGING)

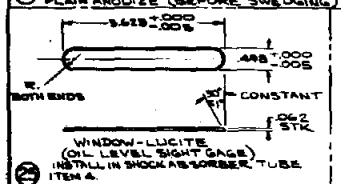

WINDOW-LUCITE (OIL LEVEL SIGHT GAGE) INSTALL IN SHOCK ABSORBER TUBE ITEM 4.

㉕

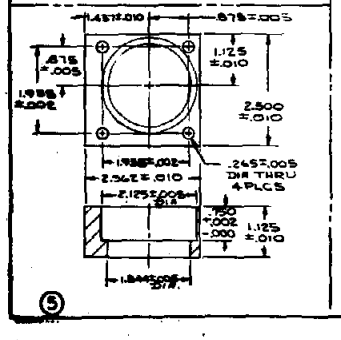

⑤

1. PLAIN ANODIZE TYPE I PER 9004100.
2. AT ASSEMBLY OF ⑥ & ⑩ USE AN OIL RESISTANT SEALANT SUCH AS PERMATEX. KEEP VIEWING PORTION OF WINDOW CLEAN AND SWEDGE WINDOW-IN PLACE AS SHOWN.
3. GRAPHITAR: THE UNITED STATES GRAPHITE COMPANY DIVISION OF WICKES CORPORATION. 1621 HOLLAND AVE. SAGINAW, MICH., 48601
4. OILITE: A NIPLEX DIVISION, CHRYSLER CORPORATION P.O. BOX 3703 DETROIT, MICHIGAN 48231
5. [illegible]TCH DIVISION, HONEYWELL CORPORATION FREEPORT, ILLINOIS
6. [illegible] CORPORATION, SCINTILLA DIVISION SYDNEY, NEW YORK
7. NEW DEPARTURE DIVISION GENERAL MOTORS CORPORATION BRISTOL, CONNECTICUT
8. STERLING PRECISION COMPONENTS DIV. OF DESIGNATRONICS INC. 55 S. BENTON AVE. NEW HYDE PARK, N.Y. 11040. COMBINATION COUPLING FOR TWO DIFFERENT SHAFT DIAMETERS: USE ONE END FROM 0081-4 (ITEM 39) & ONE END FROM 0081-6 (ITEM 54) COUPLINGS AS SHOWN.
9. GLOBE INDUSTRIES, INC. 1204 STANLEY AVE. DAYTON, OHIO 45404
10. LITTON PRECISION PRODUCTS MOUNT VERNON, NEW YORK
11. WARNER ELECTRIC CLUTCH & BRAKE COMPANY BELOIT, WISCONSIN 53511 CLUTCH COUPLING WITH ANTI-BACKLASH ARMATURE. ARMATURE BORE: .375 DIA. ROTOR BORE: .375 DIA. 28 VOLT D.C. FIELD
12. FOR GENERAL REQUIREMENTS & DRAWING INTERPRETATIONS SEE 9000B-GS.
13. ALUM. 6061-T6 PER QQ-A-225/6
14. ALUM. 6061-T6 PER QQ-A-250/11
15. STAINLESS STEEL TYPE 430 F.S. 1088 A PER QQ-S-764, C.D.
16. BRONZE COMP. B. HARD PER QQ-B-750
17. STAINLESS STEEL TYPE 304, COMP. A. QQ-S-766. ANNEALED, H.R. (PICKLED
18. ELECTROPLAN THREADS ON IRON OIL
19. MUSIC WIRE PER 7315303.

4		NUT	1/4-28		1	80
8		SOC. HD. SCR.	4-32 x 5/8		1	79
4		SOC. HD. SET SCR.	1/4-20 x 3/8		1	78
2		SOC. HD. SET SCR. DOG PT	1/4-20 x 1 1/2		1	77
2		SOC. HD. SET SCR.	1/4-20 x 1/4		1	76
2		SOC. HD. SET SCR. DOG PT	1/4-20 x 3/8		1	75
10		RD. HD. SCR.	8-40 x 1/4		1	74
2		RD. HD. SCR.	8-32 x 5/8		2	73
15		RD. HD. SCR.	8-32 x 3/8		1	72
2		HEX. HD. SCR.	1/4-20 x 1 3/4		1	71
8		SOC. HD. SCR.	1/4-20 x 1 3/4		1	70
2						69
2						68
8		SOC. HD. SCR.	1/4-20 x 3/4		1	67
33		SOC. HD. SCR.	8-32 x 1/2		1	66
4		SOC. HD. SCR.	8-40 x 3/8		1	65
8		PIN, DOWEL	.093 DIA. x 1/2		2	64
4		PIN, DOWEL	.125 DIA. x 1/2		2	63
2		PIN, DOWEL	.250 DIA. x 3/8		1	62
2		PIN, DOWEL	.093 DIA. x 1		1	61
1		PIPE PLUG	1/8 NPT	19	1	60
1		SNAP RING	TRUARC N000-84		2	59
2		WOODRUFF KEY	#307/16 x 3/32		2	58
1		SNAP RING	TRUARC N500-62		1	57
1		CLUTCH COUPLING	WARNER SFC-250	11	2	56
QTY.		DESCRIPTION		NOTE	PART NUMBER	ITEM

LIST OF MATERIAL

1		COUPLING, OLDHAM	STERLING # 0081-4	8	2	55
1		COUPLING, OLDHAM	STERLING # 0081-6	8	2	54
1		MOTOR, ELECTRIC	GLOBE # 5A522-1	9	2	53
2		GEAR 48 P 96T	STERLING # H30-96	8	2	52
2		BALL BEARING	NEW DEPARTURE 009-5.00	7	1	51
4		BALL BEARING	NEW DEPARTURE 009-00	7	1	50
1	5A1009-5	CONNECTOR	BENDIX 4U1009-9-35P	6	1	49
1	5A1173-9	CONNECTOR	BENDIX 4PT00-14-18P	6	1	48
1	5A1139-2	CONNECTOR	BENDIX 4PT00-8-35P	6	1	47
2	5A1009-1	CONNECTOR	BENDIX 4PT00-8-35	6	1	46
2	8E2U133-4	LIMIT SWITCH	MICROSWITCH V3-1	5	1	45
1		POTENTIOMETER	LITTON 4A150-107X86	10	2	44
						43
1	T2H09-13	SPRING			1	42
1	T2H09-1	SWITCH BRACKET LH			1	39
1	T2H09-2	SWITCH BRACKET RH			1	38
8		SPLAR HD. WASHER STNL. STL. 303		15	6	37
1		BEARING, UPPER, GRAPHITAR 3B		3	6	36
1		SPRING	MUSIC WIRE	19	6	35
1		BEARING, LOWER	OILITE	4	6	34
1		BEARING, INTERMEDIATE, GRAPHITAR 3B		3	6	33
2		CLAMP, POTENTIOMETER	STNLS. STL. 304	17	5	32
1		SPACER, BEARING	ALUM. 6061	1.18	5	31
1		CLUTCH SHAFT	STNLS. STL. 303	15	5	30
2		SLEEVE	ALUM. 6061	1.18	5	29
1		MOUNTING PLATE, CONNECTOR	ALUM. 6061	1.14	5	28
1		MOUNTING PLATE, CONNECTOR	ALUM. 6061	1.34	5	27
1		MOUNTING PLATE, CONNECTOR	ALUM. 6061	1.14	5	26
1		WINDOW SIGHT GAGE	LUCITE	2.19	5	25
1		SWITCH POST	STNLS. STL. 303	15	6	24
1		BRACKET, POST, LOWER	ALUM. 6061	1.34	6	23
1		BRACKET, POST, UPPER	ALUM. 6061	1.34	6	22
2		SHIM	BRONZE	16	4	21
2		SLIDE RETAINER	ALUM. 6061	1.34	4	20
						19
1		RETAINING STRAINER, LOWER	ALUM. 6061	1.38	18	18
1		PLATE, SWITCH ACTUATOR RETAINER	ALUM. 6061	1.38	6	17
2		SWITCH ACTUATOR	ALUM. 6061	1.34	6	16
2		PINION	STNLS. STL. 303	19	4	15
1		MOUNTING KEY	STNLS. STL. 303	15	6	14
1		DRIVE ROD	STNLS. STL. 303	15	6	13
1		CLUTCH BASE	ALUM. 6061	1.14	5	12
1		PLATE, HOUSING, MIDDLE	ALUM. 6061	1.14	5	11
1		BULKHEAD, POTENTIOMETER	ALUM. 6061	1.14	5	10
1		PLATE, HOUSING, LOWER	ALUM. 6061	1.14	5	9
1		PLATE, HOUSING, UPPER	ALUM. 6061	1.14	5	8
1		BULKHEAD, MIRROR	ALUM. 6061	1.14	5	7
1		PLATE, HOUSING, BACK	ALUM. 6061	1.14	5	6
1		RETAINER, TUBE	ALUM. 6061	1.34	3	5
1		SHOCK ABSORBER TUBE	ALUM. 6061	12.13	3	4
1		HOUSING, BEARING	ALUM. 6061	1.34	6	3
1		SUPPORT, UPPER BEARING	ALUM. 6061	1.13	4	2
1		HOUSING, DRIVE ROD	ALUM. 6061	1.34	4	1
QTY.		DESCRIPTION		NOTE	PART NUMBER	ITEM

LIST OF MATERIAL

TITLE
CONTROL ELEMENT
DRIVE UNIT
SPR III

REVISIONS: 0
DOD CLASSIFICATION LEVEL: UNCLASSIFIED
CODE IDENT NUMBER: 01421 DRAWING NUMBER: 122421
SCALE 1/1 SHEET 5 OF 6

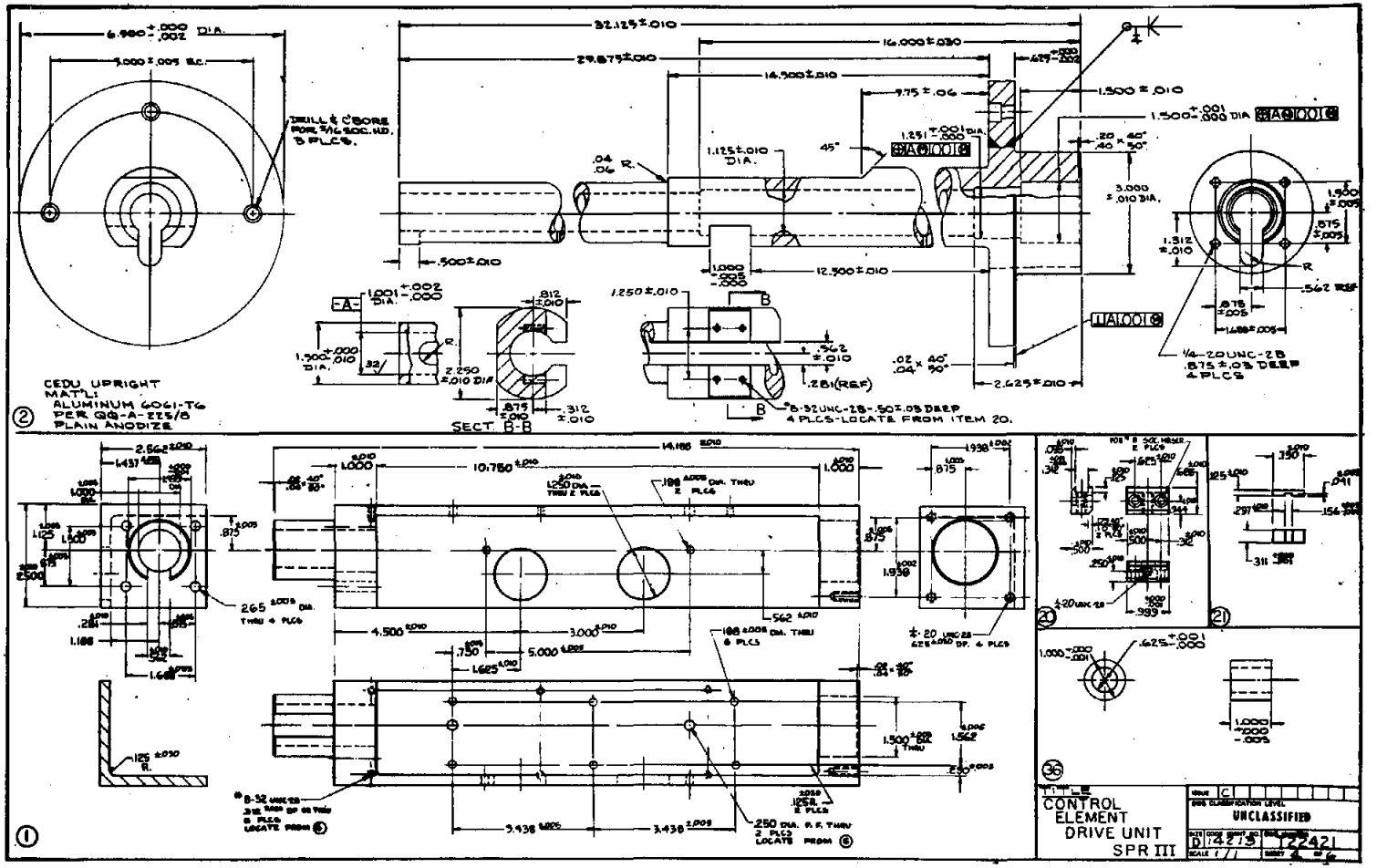
CEDU UPRIGHT
MAT'L:
ALUMINUM 6061-T6
PER QQ-A-225/8
PLAIN ANODIZE
SECT. B-B
CONTROL
ELEMENT
DRIVE UNIT
SPR III
UNCLASSIFIED
D14215
22421

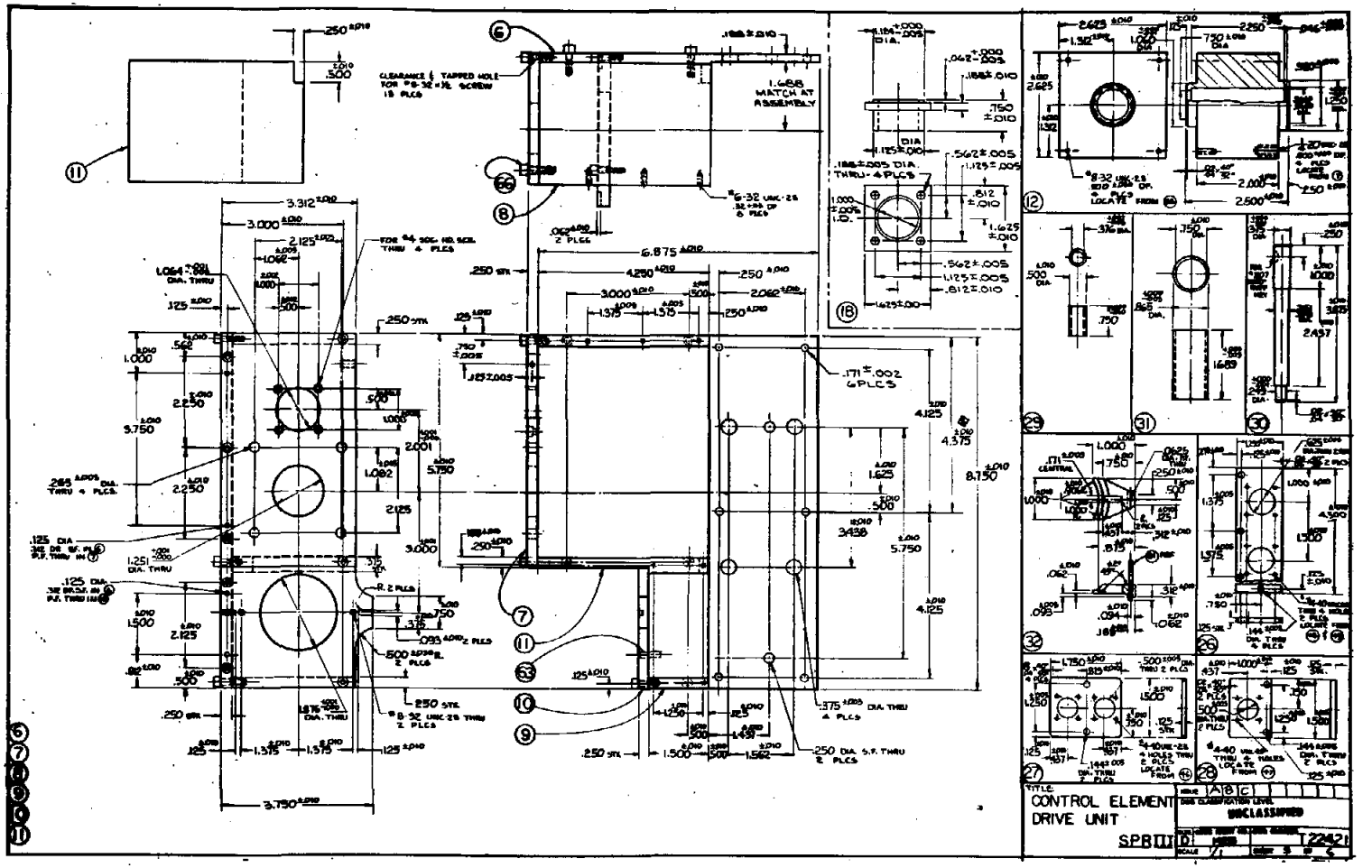
CONTROL ELEMENT
DRIVE UNIT
SPBIII
UNCLASSIFIED
22421

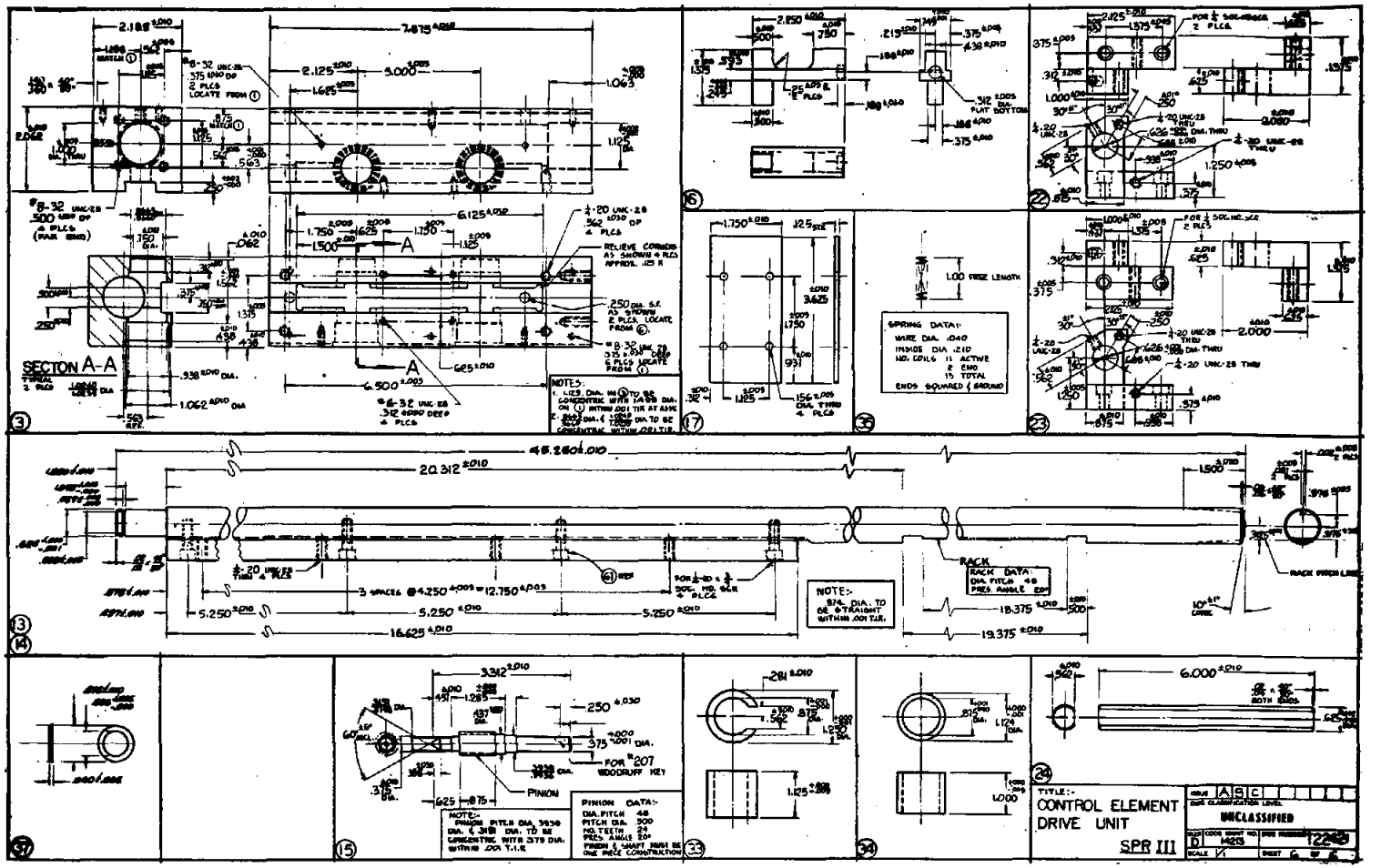
SECTION A-A
RELIEVE CORNERS AS SHOWN 4 PLCS APPROX. .125 R
NOTES:
SPRING DATA:
WIRE DIA. .040
INSIDE DIA. .210
NO. COILS 11 ACTIVE
2 END
13 TOTAL
ENDS SQUARED & GROUND
1.00 FREE LENGTH
RACK
RACK DATA:
DIA. PITCH 48
PRES. ANGLE 20°
NOTE:-
3/4 DIA. TO BE STRAIGHT WITHIN .001 T.I.R.
PINION
PINION DATA:-
DIA. PITCH 48
PITCH DIA. 3.500
NO. TEETH 24
PRES. ANGLE 20°
FOR #207 WOODRUFF KEY
TITLE:-
CONTROL ELEMENT DRIVE UNIT
SPR III
UNCLASSIFIED
D
14213
SCALE 1/1

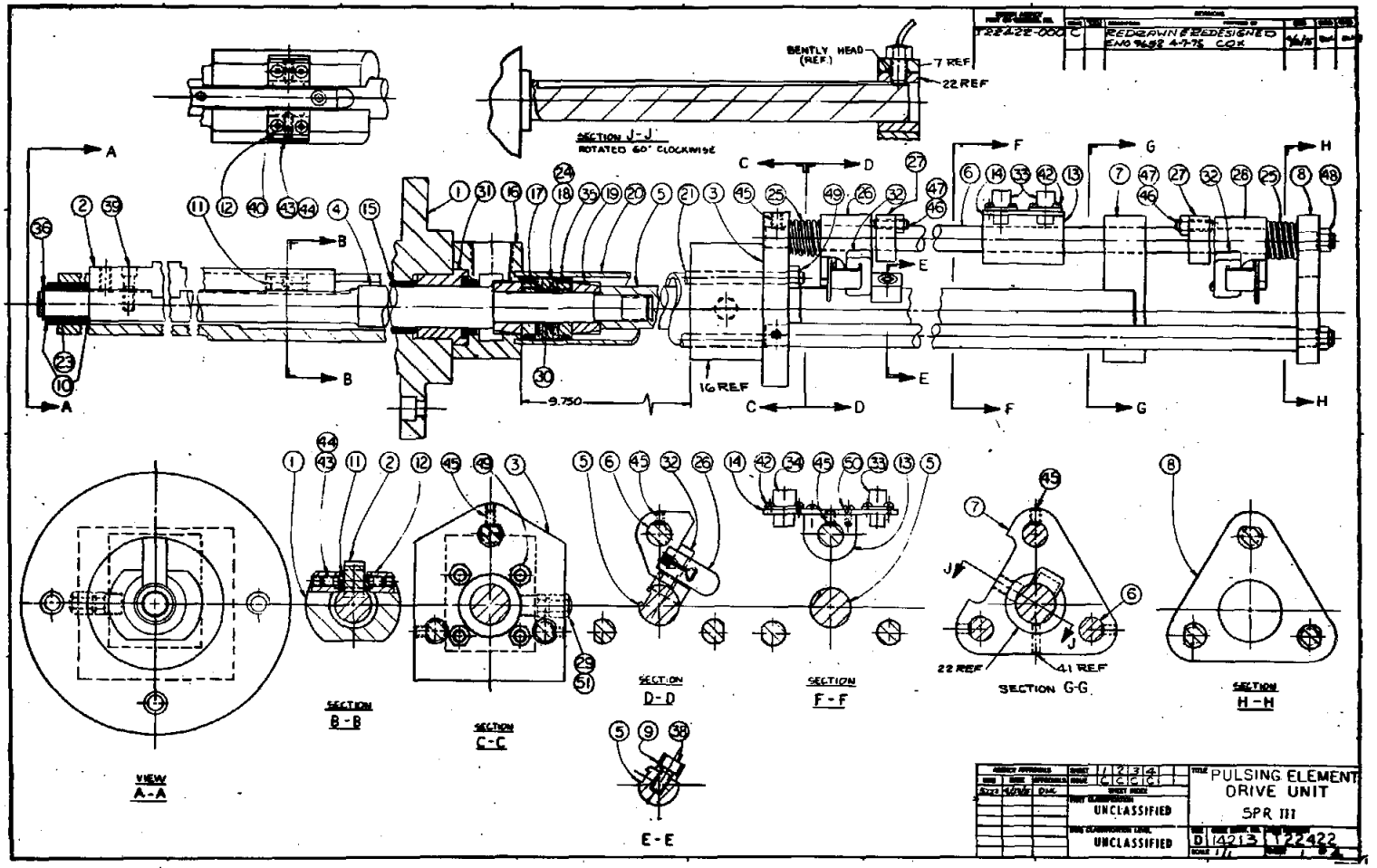
122422-000 C
REDRAWN & REDESIGNED
ENG 9682 4-7-75 COX
BENTLY HEAD (REF.)
7 REF
22 REF
SECTION J-J
ROTATED 60° CLOCKWISE
9.750
16 REF
VIEW A-A
SECTION B-B
SECTION C-C
SECTION D-D
SECTION F-F
SECTION G-G
SECTION H-H
E-E
22 REF
4.1 REF
UNCLASSIFIED
UNCLASSIFIED
PULSING ELEMENT DRIVE UNIT
SPR III
D 14213 122422

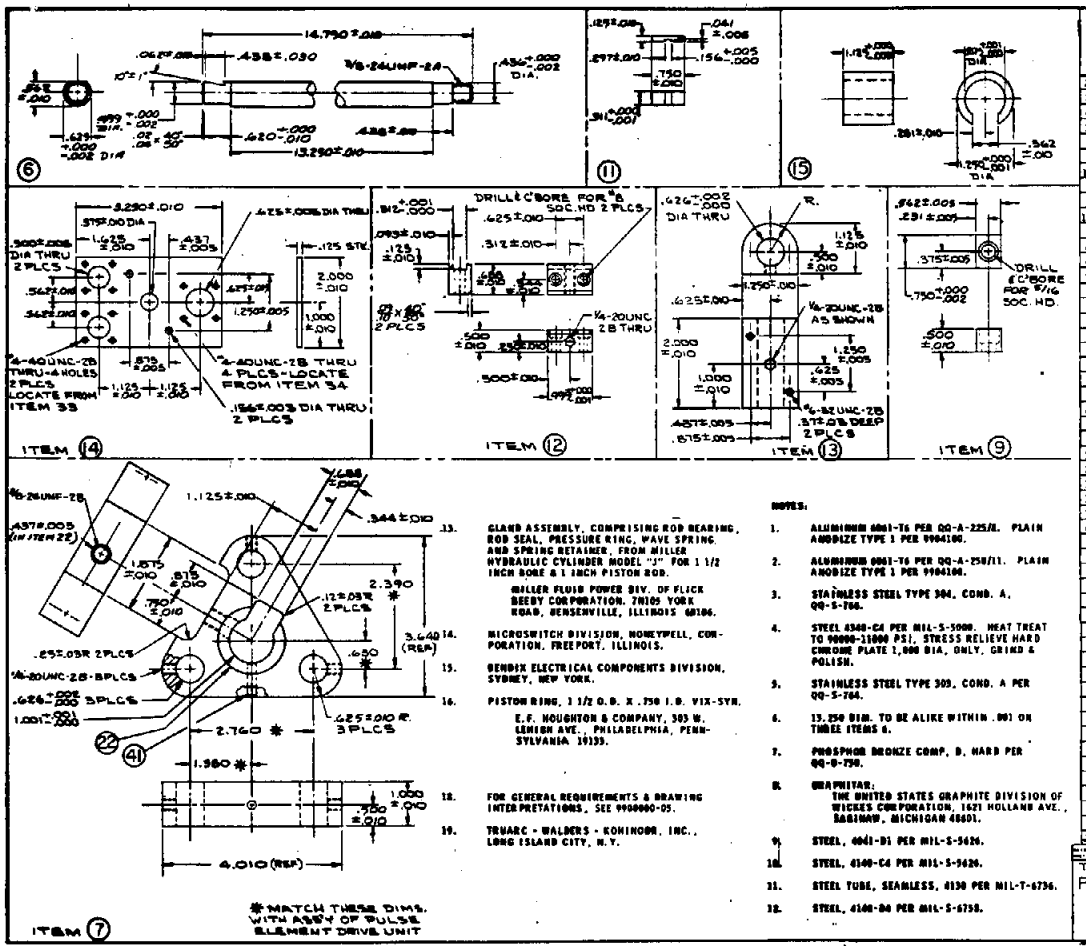

13. GLAND ASSEMBLY, COMPRISING ROD BEARING, ROD SEAL, PRESSURE RING, WAVE SPRING AND SPRING RETAINER, FROM MILLER HYDRAULIC CYLINDER MODEL "J" FOR 1 1/2 INCH BORE & 1 INCH PISTON ROD.
MILLER FLUID POWER DIV. OF FLICK BEEBY CORPORATION. 70109 YORK ROAD, BENSENVILLE, ILLINOIS 60106.

14. MICROSWITCH DIVISION, HONEYWELL, CORPORATION. FREEPORT, ILLINOIS.

15. BENDIX ELECTRICAL COMPONENTS DIVISION, SYDNEY, NEW YORK.

16. PISTON RING, 1 1/2 O.D. X .750 I.D. VIX-SYN.
E.F. HOUGHTON & COMPANY, 303 W. LEHIGH AVE., PHILADELPHIA, PENNSYLVANIA 19133.

18. FOR GENERAL REQUIREMENTS & DRAWING INTERPRETATIONS, SEE 9900000-05.

19. TRUARC - WALDERS - KONINOOR, INC., LONG ISLAND CITY, N.Y.

NOTES:

1. ALUMINUM 6061-T6 PER QQ-A-225/8. PLAIN ANODIZE TYPE 1 PER 9904100.
2. ALUMINUM 6061-T6 PER QQ-A-250/11. PLAIN ANODIZE TYPE 1 PER 9904100.
3. STAINLESS STEEL TYPE 304, COND. A, QQ-S-766.
4. STEEL 4340-C4 PER MIL-S-5000. HEAT TREAT TO 90000-110000 PSI, STRESS RELIEVE HARD CHROME PLATE 1,000 DIA. ONLY, GRIND & POLISH.
5. STAINLESS STEEL TYPE 303, COND. A PER QQ-S-764.
6. 13.250 DIM. TO BE ALIKE WITHIN .001 ON THREE ITEMS 6.
7. PHOSPHOR BRONZE COMP. B, HARD PER QQ-B-750.
8. GRAPHITAR:
THE UNITED STATES GRAPHITE DIVISION OF WICKES CORPORATION, 1621 HOLLAND AVE., SAGINAW, MICHIGAN 48601.
9. STEEL, 4041-D1 PER MIL-S-5626.
10. STEEL, 4140-C4 PER MIL-S-5626.
11. STEEL TUBE, SEAMLESS, 4130 PER MIL-T-6736.
12. STEEL, 4140-B4 PER MIL-S-6758.

2		UNION, TUBE, BRASS 1/4 TUBE TO 1/4 NPT			51
2		SCR, RD. HD. 4-40 X 3/8 LONG		1	50
4		NUT, HEX 1/4-28		1	49
3		NUT, HEX, 5/8-24		1	48
2		NUT, HEX, 1/4-28		1	47
2		SCR. SET, SOC HD, DOG PT, 1/4-28 X 1		1	46
10		SCR. SET, SOC HD 1/4-28 X 3/8		1	45
2		SCR. SET, SOC HD 1/4-28 X 1/4		1	44
2		SCR. SET, SOC HD, DOG PT, 1/4-28 X 3/8		1	43
12		SCR. RD. HD. 8-40 X 1/4		1	42
1		PIN, DOWEL .1875 DIA X 3/4		1	41
4		SCR. SOC. HD. 8-32 X 5/8		1	40
4		SCR., SOC. HD. 1/4-28 X 3/4		1	39
1		SCR, SOC. HD. 5/16-18 X 5/8		1	38
					37
1		RETAINING RING TRUARC #5100-62	19		36
2		PISTON RING VIX-SYN-E.F. HOUGHTON 5-22-16	16	1	35
1	SA1179-1	CONNECTOR, BENDIX PT00-10-98P	15	1	34
1	SA1179-1	CONNECTOR, BENDIX PT00-8-3S	15	1	33
2	MS25253-4	LIMIT SWITCH MICROSWITCH V-51	14	1	32
2	-	GLAND ASSEMBLY	13	2	31
1		"O" RING PARKER 02-116			30
2		CAP, PIPE, MODIFIED BRASS 1/4			29
1	T22430-2	BRACKET, SWITCH, R.H.		1	28
2	T22430-11	COLLAR, ADJUSTING		1	27
1	T22430-1	BRACKET, SWITCH L.H.		1	26
2	T22430-13	SPRING		1	25
1		BACK-UP RING S.S. 303	9		24
1		BEARING UPPER GRAPHITAR 38	8		23
1	-	BEARING OILITE		2	22
4		TIE ROD STEEL 4130-B4	12	4	21
1		CYLINDER BARREL STEEL 4130-	11	4	20
2		DASH POT PISTON STEEL 4140-C4	10	4	19
1		PISTON STEEL 4140-C4	10	4	18
2		PISTON RETAINER STEEL 4140-C4	10	4	17
2		CYLINDER HEAD STEEL 4041-D1	9	4	16
1		BEARING, INTERMEDIATE GRAPHITAR 38	8	2	15
1		MOUNTING PLATE ALUM. 6061-T6	7	2	14
1		COLLAR, CONNECTOR ALUM. 6061-T6	7	2	13
2		SHOE RETAINER ALUM. 6061-T6	7	2	12
2		SHOE BRONZE	7	2	11
2		BEARING WASHER STNLS STL. 303	5	4	10
1		DOG, SWITCH STNLS. STL. 304	5	2	9
1		PLATE ALUM. 6061-T6	2	4	8
1		BRACKET SENSOR ALUM. 6061-T6	2	2	7
3		LEG STNLS. STL. 303	5,6	2	6
1		PISTON ROD, LOWER STEEL-4340-C4	4	5	5
1		PISTON ROD, UPPER STEEL-4340-C4	4	5	4
1		PLATE, CYL. END ALUM. 6061-T6	2	4	3
1		MOUNTING KEY STNLS STL. 304	3	5	2
1		SUPPORT, BEARING ALUM. 6061-T6	1	5	1

LIST OF MATERIAL

TITLE
PULSING ELEMENT DRIVE UNIT
SPR III

ISSUE C
DOC CLASSIFICATION LEVEL
UNCLASSIFIED
DIL215 T22422
SCALE 1/1 SHEET 2 OF 4

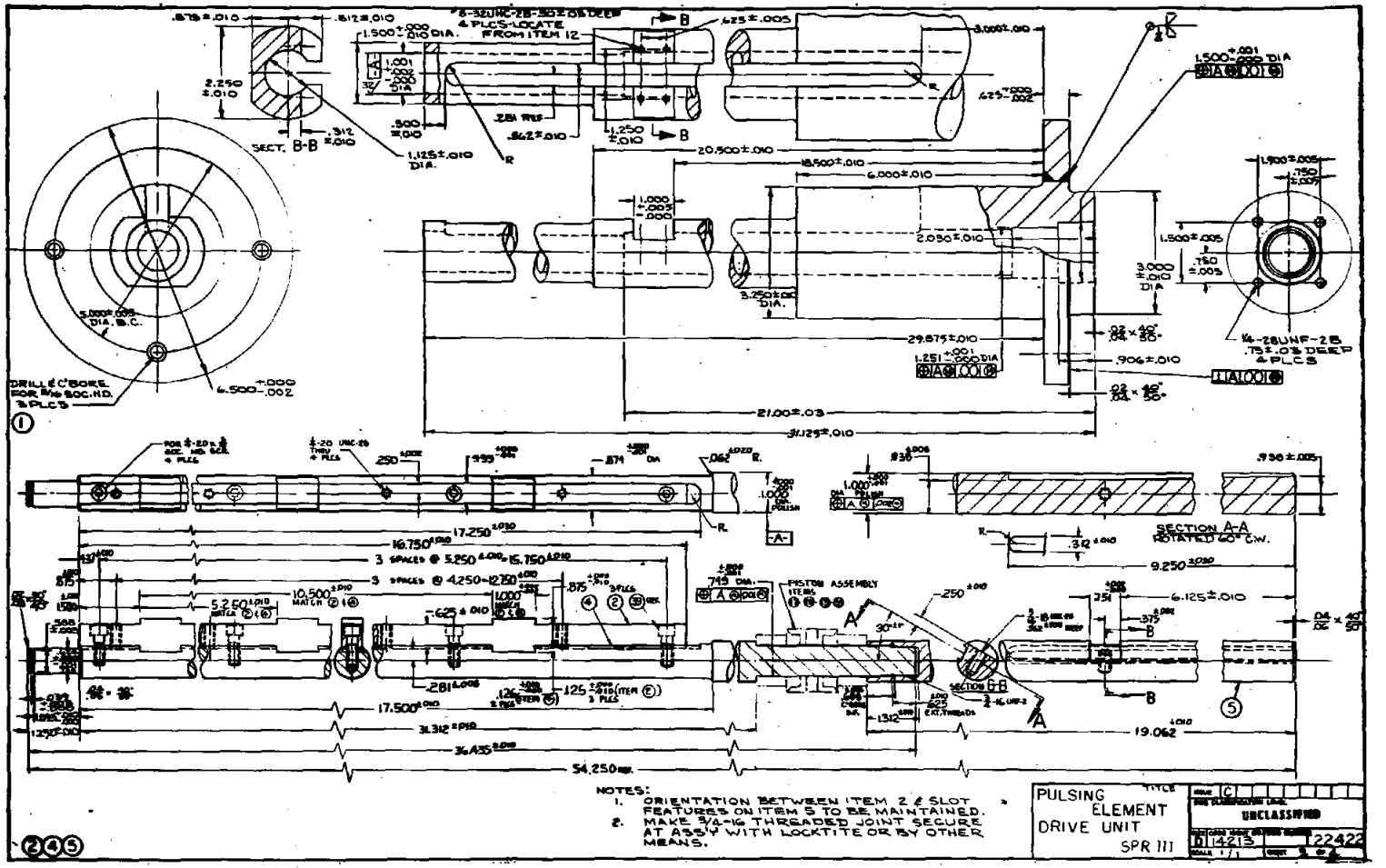
SECT. B-B
SECTION A-A
ROTATED 60° C.W.
SECTION 6-6
PISTON ASSEMBLY
NOTES:
1. ORIENTATION BETWEEN ITEM 2 & SLOT FEATURES ON ITEM 5 TO BE MAINTAINED.
2. MAKE 3/4-16 THREADED JOINT SECURE AT ASS'Y WITH LOCKTITE OR BY OTHER MEANS.
PULSING ELEMENT DRIVE UNIT SPR III
UNCLASSIFIED
014215
22422

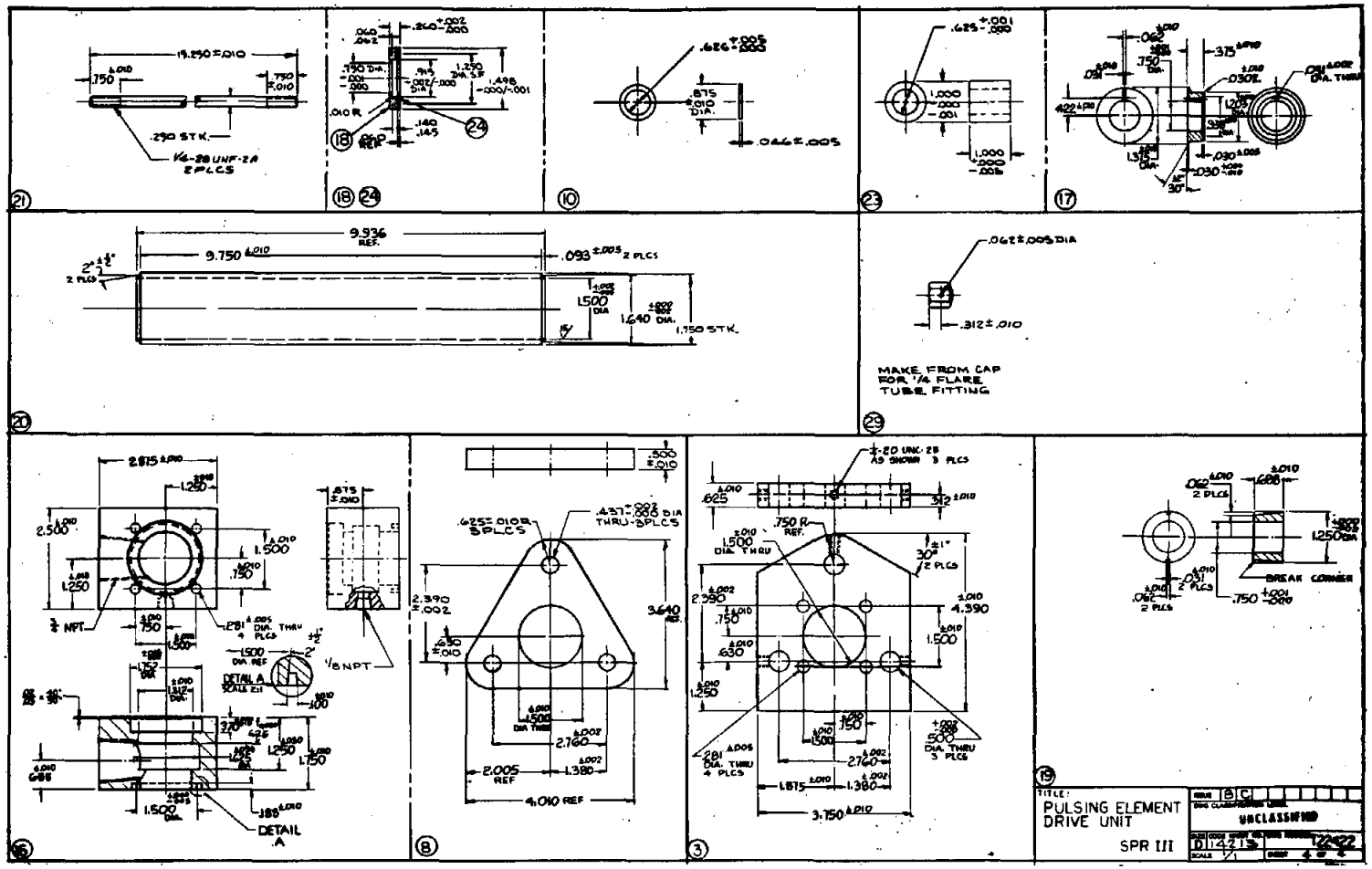
PULSING ELEMENT
DRIVE UNIT
SPR III
UNCLASSIFIED
MAKE FROM CAP FOR 1/4 FLARE TUBE FITTING
DETAIL A
BREAK CORNER

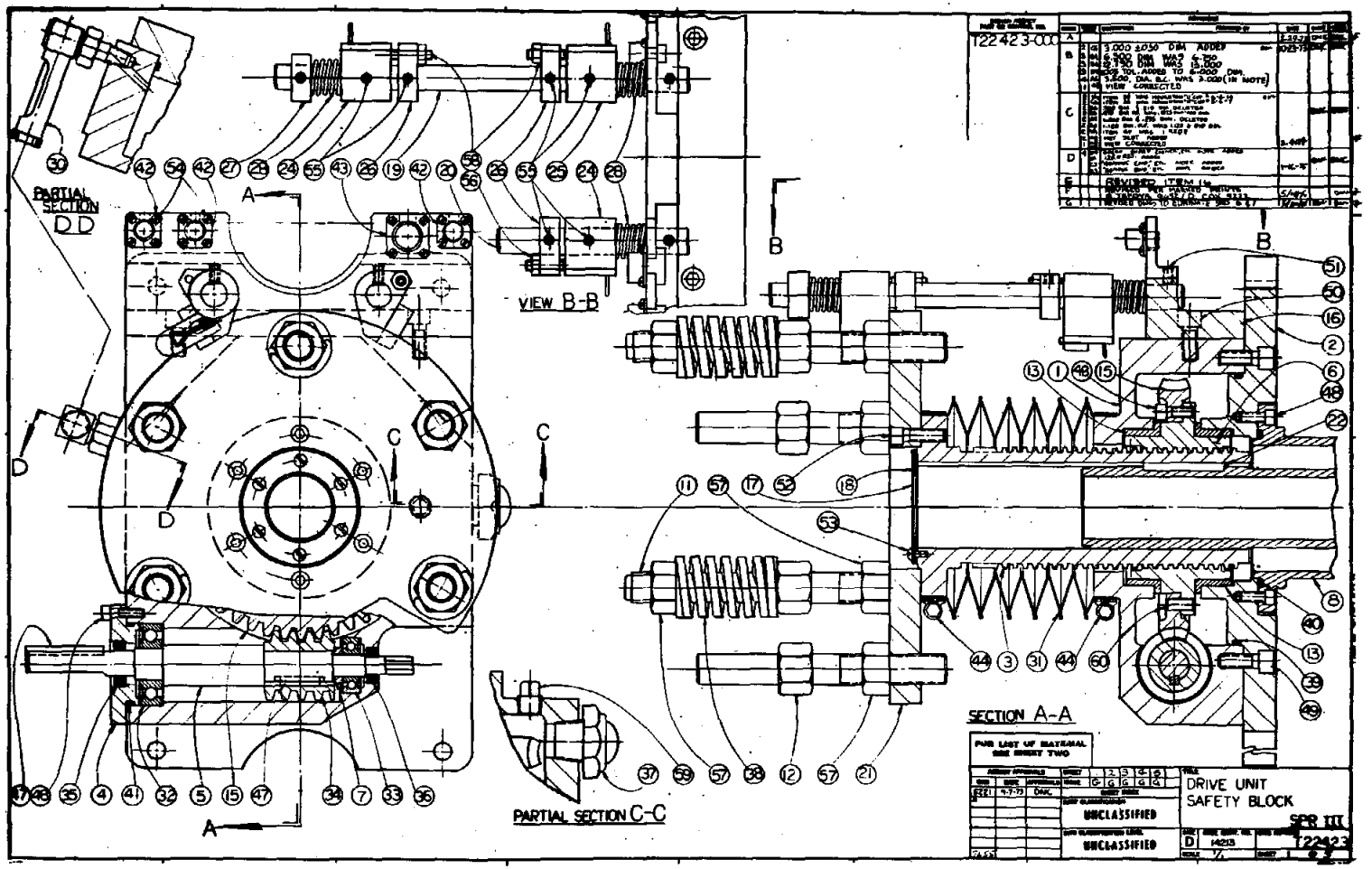
PARTIAL SECTION D-D
VIEW B-B
PARTIAL SECTION C-C
SECTION A-A
DRIVE UNIT
SAFETY BLOCK
UNCLASSIFIED
UNCLASSIFIED
T22423-000

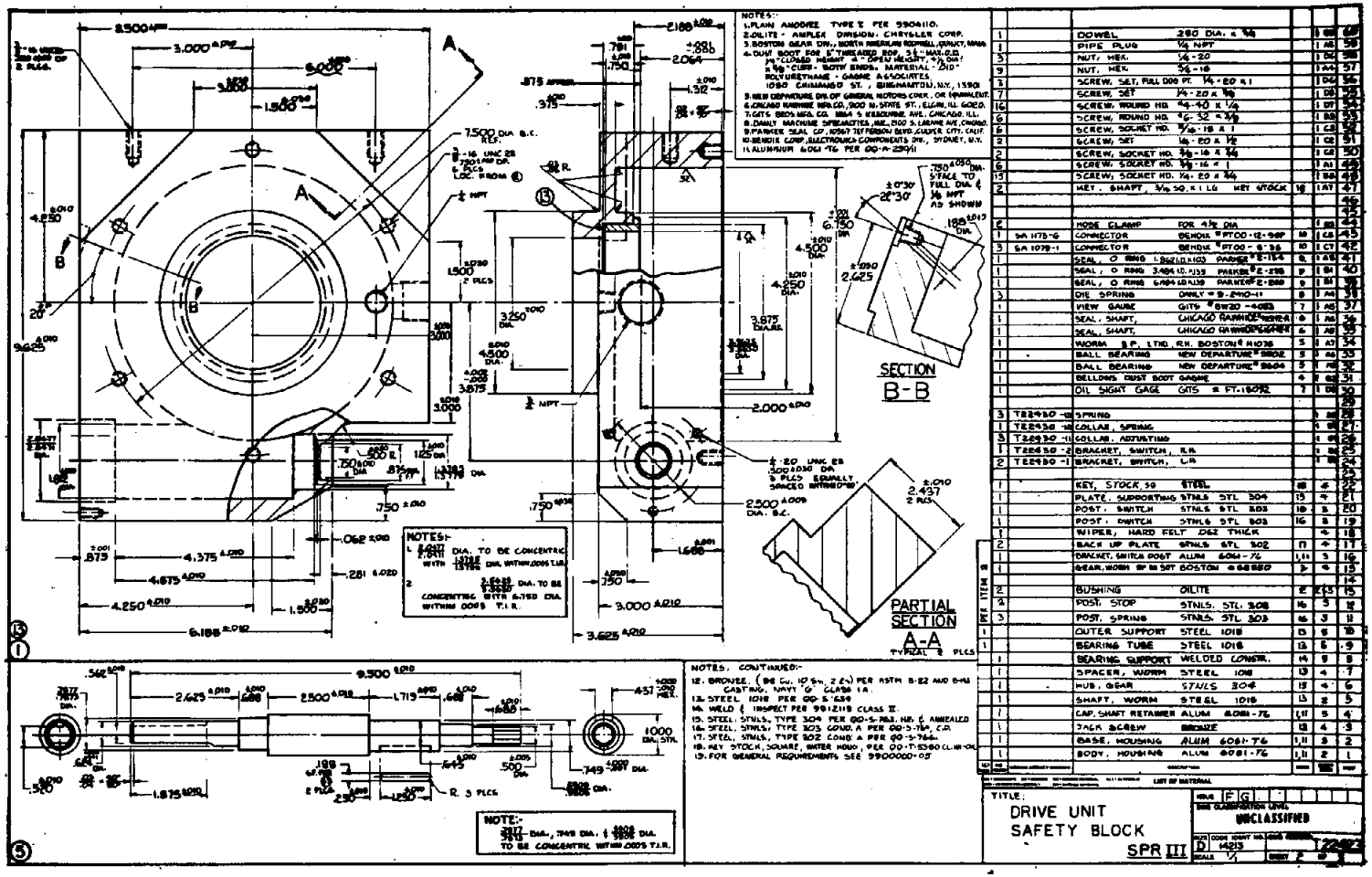
NOTES:-
1. PLAIN ANODIZE TYPE II PER 5904110.
2. OILITE - AMPLEX DIVISION, CHRYSLER CORP.
3. BOSTON GEAR DIV., NORTH AMERICAN ROCKWELL CORP., MAIN
4. DUAL BOOT FOR 5" THREADED ROD 3½" MAX. O.D.
5. RELIEF DEPARTURE DIV. OF GENERAL MOTORS CORP., OR EQUIVALENT.
6. CHICAGO RAWHIDE MFG. CO., 900 N. STATE ST., ELGIN, ILL. 60120.
7. GITS MFG. CO. 5844 S. KEDZIE AVE., CHICAGO, ILL.
8. DAHLY MACHINE SPECIALTIES, INC., 2100 S. LARAMIE AVE., CHICAGO.
9. PARKER SEAL CO., 10567 JEFFERSON BLVD., CULVER CITY, CALIF.
10. BENDIX CORP., ELECTRONICS COMPONENTS DIV., SYDNEY, N.Y.
11. ALUMINUM 6061-T6 PER QQ-A-250/11
SECTION B-B
PARTIAL SECTION A-A
TYPICAL 2 PLCS
NOTES:-
L. DIA. TO BE CONCENTRIC WITH DIA. WITHIN .0005 T.I.R.
2. DIA. TO BE CONCENTRIC WITH DIA. WITHIN .0005 T.I.R.
NOTE:-
DIA., DIA. & DIA. TO BE CONCENTRIC WITHIN .0005 T.I.R.
NOTES, CONTINUED:-
12. BRONZE (88 CU. 10 SN. 2 ZN) PER ASTM B-62 AND B-145 CASTING, NAVY 'G' CLASS 1A.
13. STEEL 1018 PER QQ-S-639
14. WELD & INSPECT PER 99-12118 CLASS II.
15. STEEL, STNLS, TYPE 304 PER QQ-S-763, HR. & ANNEALED
16. STEEL, STNLS, TYPE 303 COND. A PER QQ-S-764, CR.
17. STEEL, STNLS, TYPE 302 COND. A PER QQ-S-764.
18. KEY STOCK, SQUARE, WATER HARD, PER QQ-T-1536 CL. W-OIL
19. FOR GENERAL REQUIREMENTS SEE 99000000-05
LIST OF MATERIAL
TITLE:
DRIVE UNIT
SAFETY BLOCK
SPR III
UNCLASSIFIED
D 14213

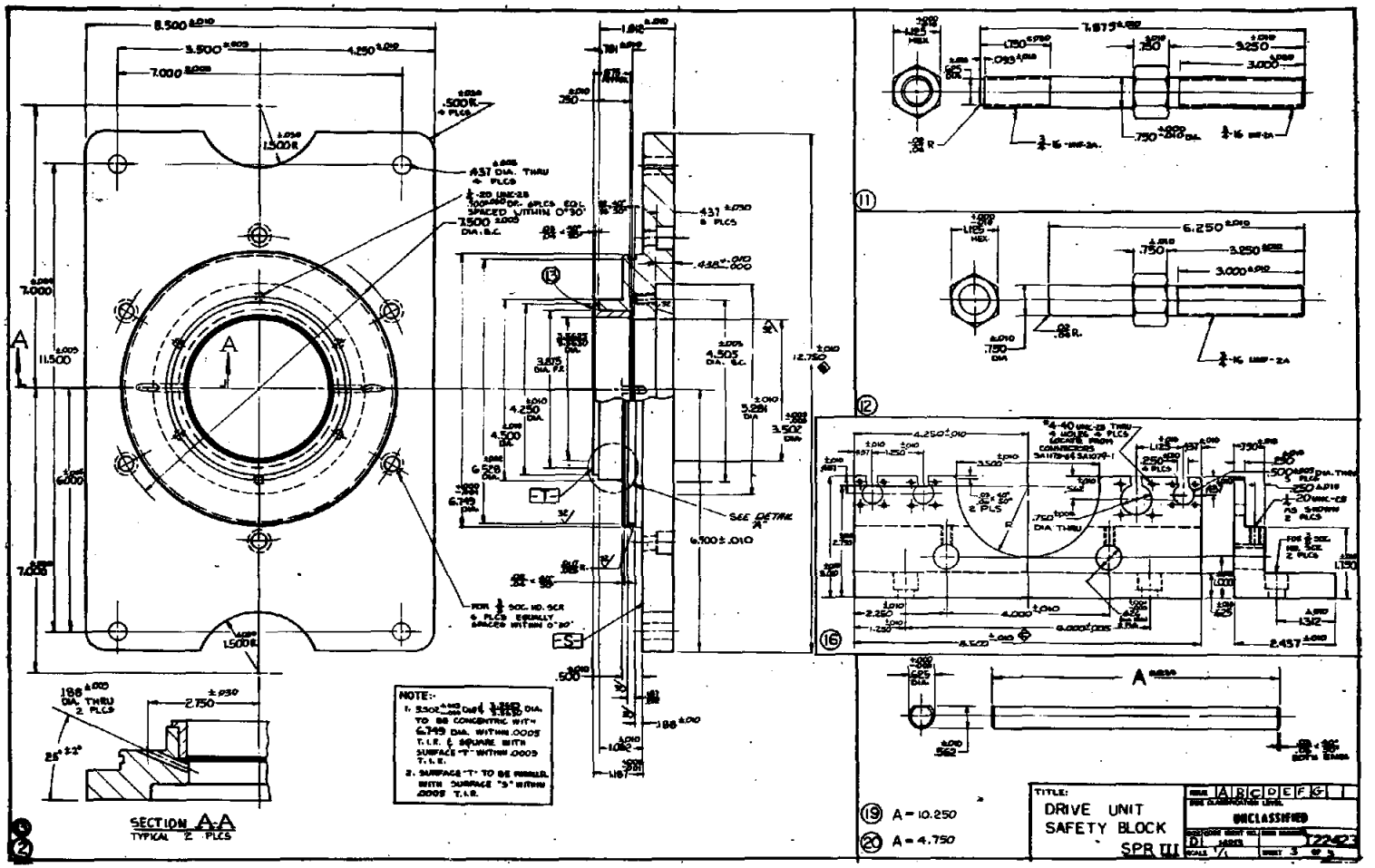
SECTION A-A
TYPICAL 2 PLCS
NOTE:-
1. 5.500 DIA. TO BE CONCENTRIC WITH 6.749 DIA. WITHIN .0005 T.I.R. & SQUARE WITH SURFACE "T" WITHIN .0005 T.I.R.
2. SURFACE "T" TO BE PARALLEL WITH SURFACE "S" WITHIN .0005 T.I.R.
SEE DETAIL A
A = 10.250
A = 4.750
TITLE:
DRIVE UNIT
SAFETY BLOCK
SPR III
UNCLASSIFIED

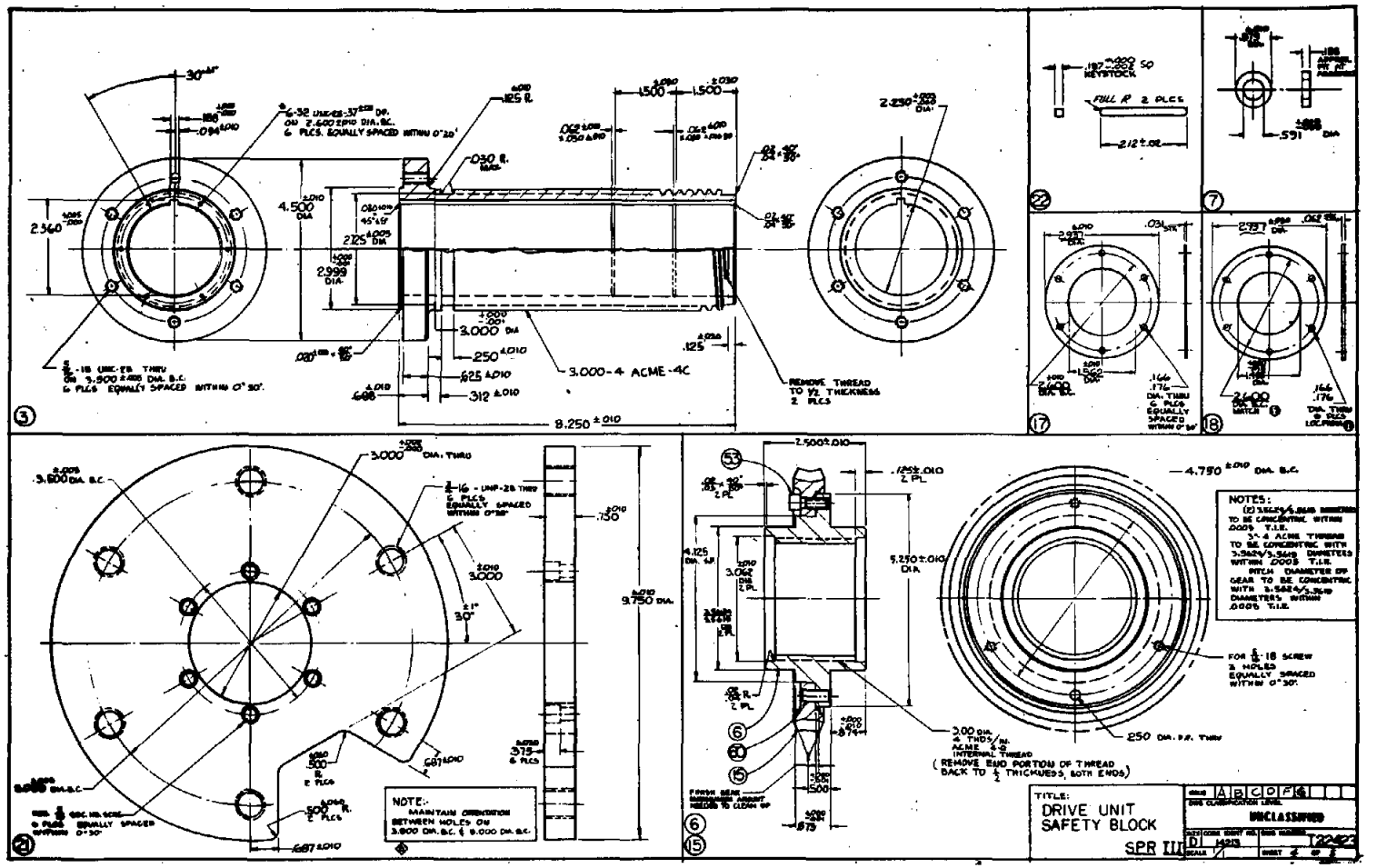
3.000-4 ACME-4C
REMOVE THREAD TO ½ THICKNESS 2 PLCS
8.250 ±.010
NOTE: MAINTAIN ORIENTATION BETWEEN HOLES ON 3.600 DIA. B.C. & 9.000 DIA. B.C.
9.750 DIA.
4.750 ±.010 DIA. B.C.
NOTES:
3-4 ACME THREAD TO BE CONCENTRIC WITH 3.3424/3.3449 DIAMETERS WITHIN .0003 T.I.R.
PITCH DIAMETER OF GEAR TO BE CONCENTRIC WITH 3.5444/3.3549 DIAMETERS WITHIN .0006 T.I.R.
FOR ½-18 SCREW 3 HOLES EQUALLY SPACED WITHIN 0°30'
.250 DIA. P.P. THRU
3.00 DIA. 4 THDS/IN. ACME 3-G INTERNAL THREAD (REMOVE END PORTION OF THREAD BACK TO ½ THICKNESS, BOTH ENDS)
TITLE: DRIVE UNIT SAFETY BLOCK
SPR III
UNCLASSIFIED
D 4213
T22423

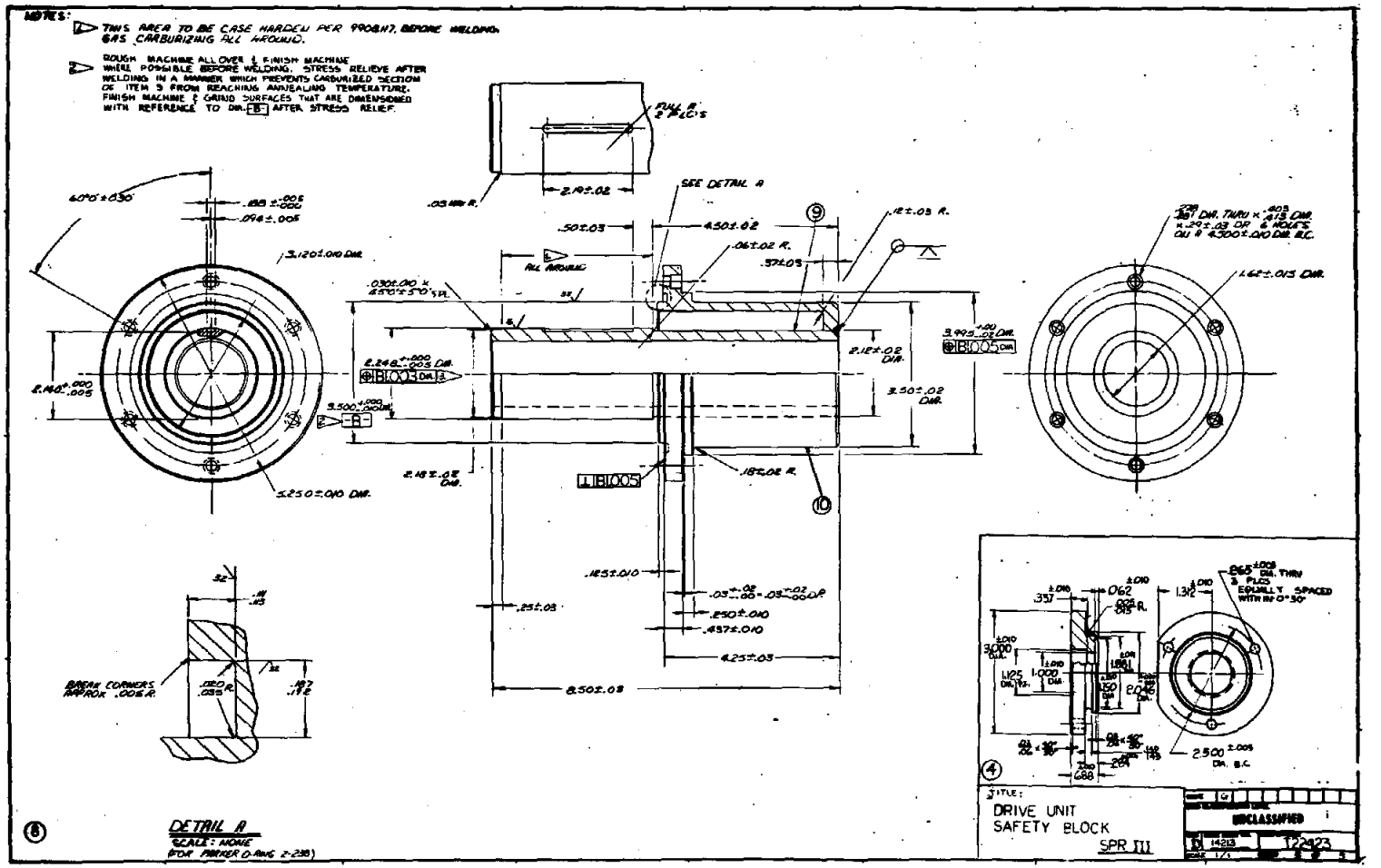
NOTES:
THIS AREA TO BE CASE HARDEN PER 9906H7, BEFORE WELDING. GAS CARBURIZING ALL AROUND.
ROUGH MACHINE ALL OVER & FINISH MACHINE WHERE POSSIBLE BEFORE WELDING. STRESS RELIEVE AFTER WELDING IN A MANNER WHICH PREVENTS CARBURIZED SECTION OF ITEM 9 FROM REACHING ANNEALING TEMPERATURE. FINISH MACHINE & GRIND SURFACES THAT ARE DIMENSIONED WITH REFERENCE TO DIA. B AFTER STRESS RELIEF.
SEE DETAIL A
ALL AROUND
DETAIL A
SCALE: NONE
(FOR PARKER D.WG 2-238)
DRIVE UNIT
SAFETY BLOCK
SPR III
UNCLASSIFIED
172923

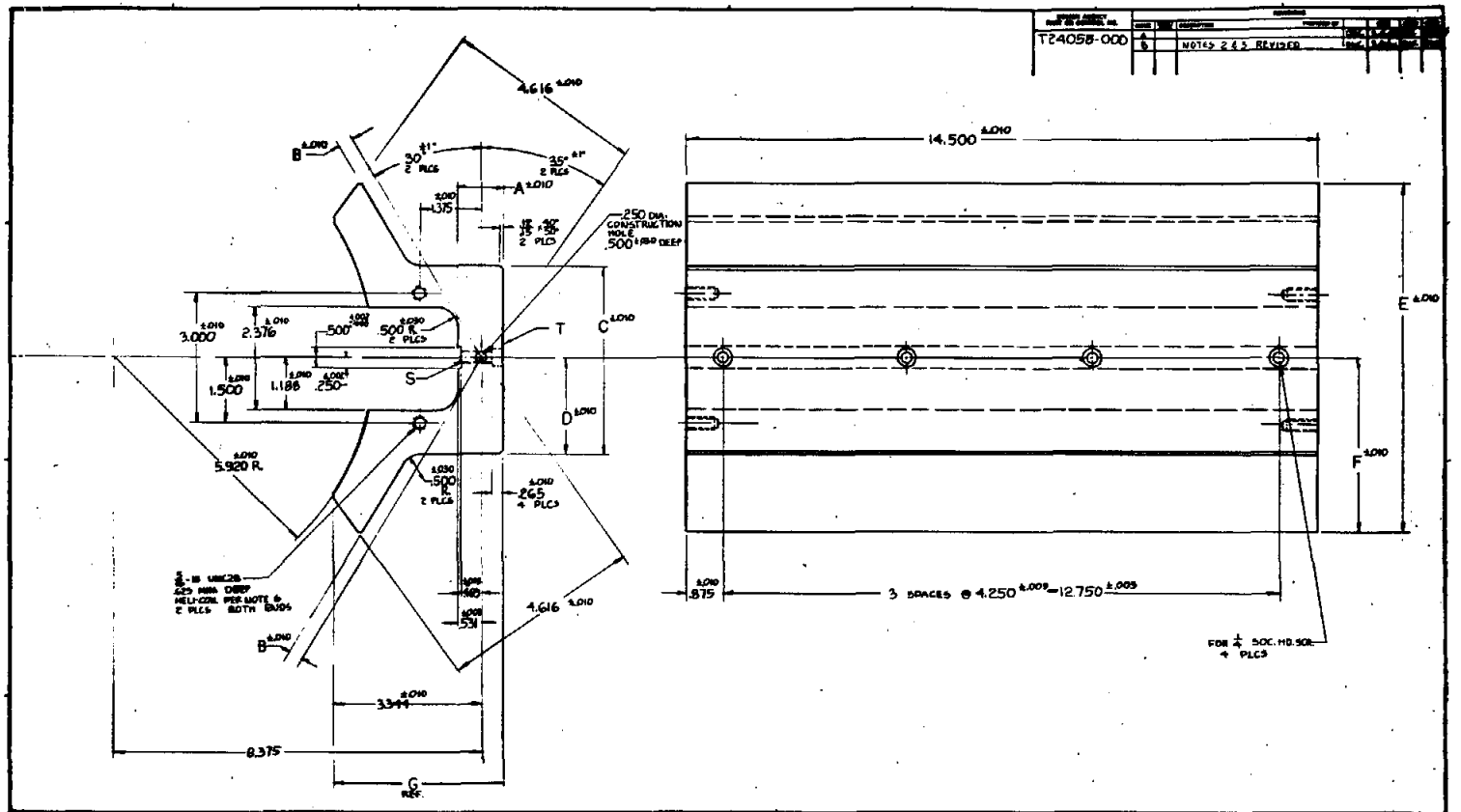

NOTES:-

1. F.A.O. ✓
2. MATERIAL :- COPPER OFHC PER ASTM-B-170
3. NICKEL PLATE .0001-.0002 THICK PER 9081105
4. SURFACE "S" TO BE PARALLEL WITH SURFACE "T" WITHIN .005 TIR.
5. ℄ OF 5.920 RL TO BE PARALLEL WITH SURFACE "S" AND WITH .250 DIM. (ON .500 WIDE SLOT) WITHIN .005 TIR.
6. INSERT INSTALLATION HELI-COIL SCREW THREAD PER 9015010-02.
7. FOR GENERAL REQUIREMENTS & DRAWING INTERPRETATIONS, SEE 9000000-05.

ITEM	A	B	C	D	E	F	G
1	1.000	.333	4.576	2.188	8.000	4.000	3.823
2	1.250	.083	4.874	2.436	8.500	4.250	4.073
3	.750	.583	3.876	1.938	7.624	3.812	3.573

DIMENSION

8-27-72	8-27-72	DNG	

SHEET SIZE D

PART CLASSIFICATION: UNCLASSIFIED

DWG CLASSIFICATION LEVEL: UNCLASSIFIED

TITLE: REFLECTOR CONTROL ELEMENT SPR III

SIZE D | DWG. NO. 14213 | DWG. NO. T24058

SCALE 1/1 | SHEET 1 OF 2

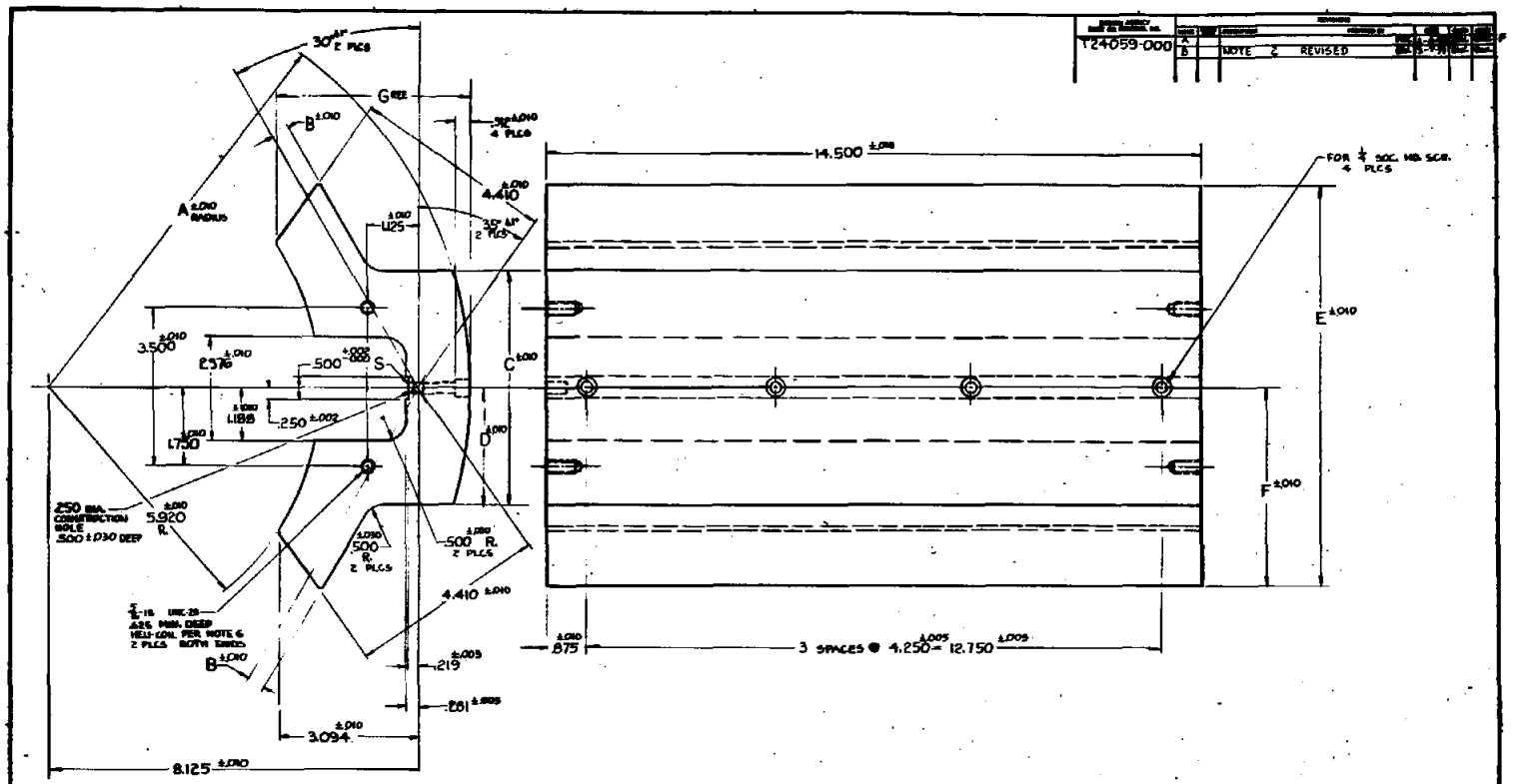

NOTES:

1. F.A.O.
2. MATERIAL ALUMINUM 6061-T6 PER QQ-A-250/11
3. PLAIN ANODIZE TYPE I PER 9904100.
4. 5.920 R. ℄ "A" R. TO BE CONCENTRIC WITHIN .005 TIR.
5. ℄ OF 3.250 R. TO BE PARALLEL WITH SURFACE "S" AND WITH .250 DIA. (ON .500 WIDE SLOT) WITHIN .005 TIR.
6. INSERT INSTALLATION HELI-COIL SCREW THREAD PER 991500-02.
7. FOR GENERAL REQUIREMENTS & DRAWING INTERPRETATIONS, SEE 9000000-03.

ITEM	A	B	C	D	E	F	G
1	9.393	.385	5.376	2.688	9.000	4.500	4.312
2	9.396	.635	5.876	2.938	9.376	4.688	4.361
3	9.093	.135	4.876	2.438	8.500	4.250	4.062

AGENCY APPROVALS: 5221 8-25-71 DMJC

SHEET 1 OF 1 REV B

UNCLASSIFIED

UNCLASSIFIED

TITLE: REFLECTOR PULSE ELEMENT SPR III

SIZE D CODE IDENT NO. 14213 DWG NO. T24059

SCALE 1/1

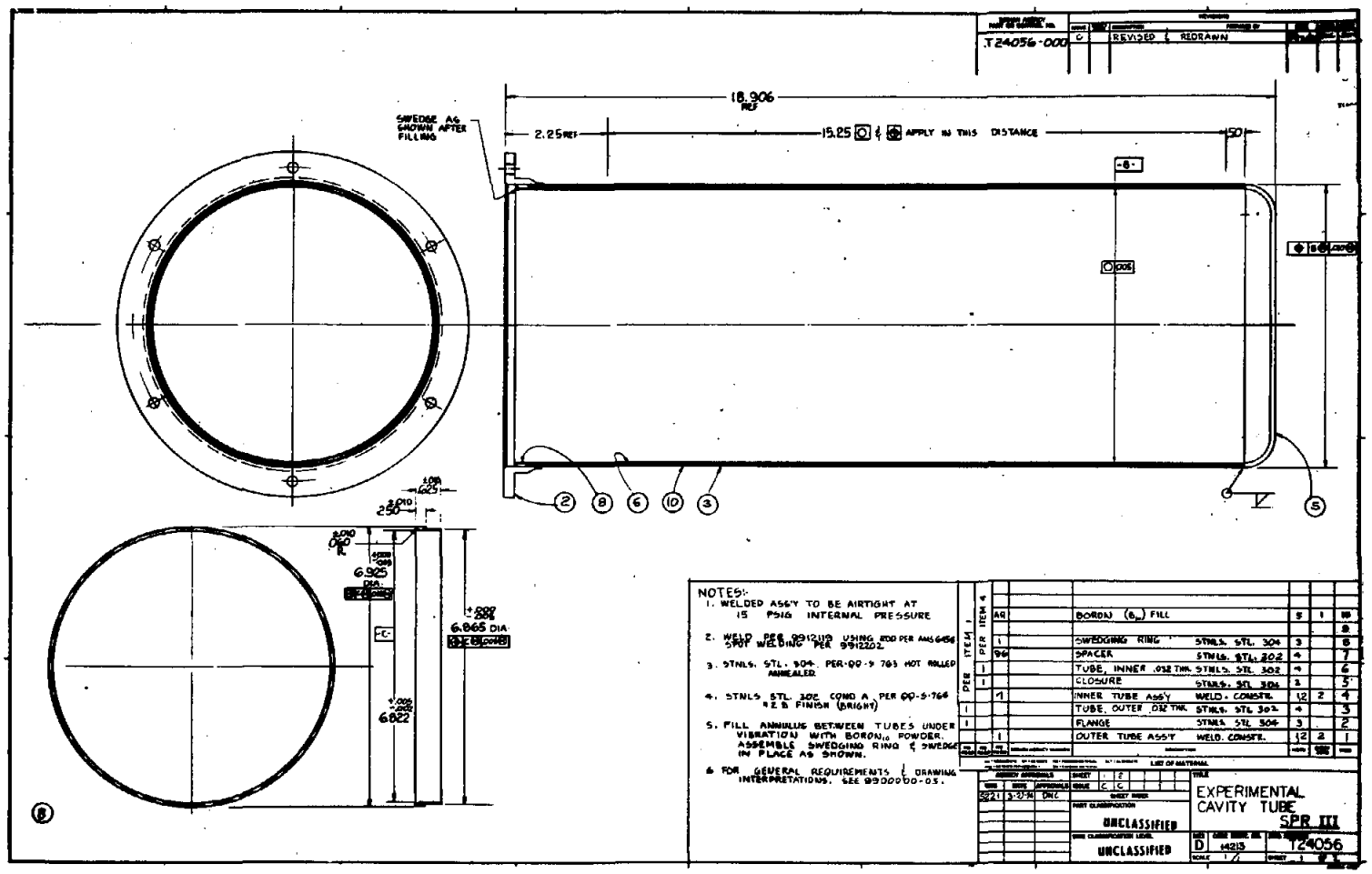
T24056-000
C
REVISED & REDRAWN
18.906 REF
2.25 REF
15.25 ⊙ & ⊕ APPLY IN THIS DISTANCE
.50
SWEDGE AS SHOWN AFTER FILLING
-B-
.005
.625
.250
.010
.060 R
6.925 DIA.
-C-
6.865 DIA.
6.622
2
8
6
10
3
5
NOTES:
1. WELDED ASS'Y TO BE AIRTIGHT AT 15 PSIG INTERNAL PRESSURE
2. WELD PER 9912119 USING 2000 PER AMS 6456 SPOT WELDING PER 9912202
3. STNLS. STL. 304. PER-QQ-S 763 HOT ROLLED ANNEALED
4. STNLS STL. 302 COND A PER QQ-S-766 #2B FINISH (BRIGHT)
5. FILL ANNULUS BETWEEN TUBES UNDER VIBRATION WITH BORON10 POWDER. ASSEMBLE SWEDGING RING & SWEDGE IN PLACE AS SHOWN.
6. FOR GENERAL REQUIREMENTS & DRAWING INTERPRETATIONS, SEE 9300000-03.
PER ITEM 4
PER ITEM 1
AR BORON (B10) FILL 5 1 10
1 SWEDGING RING STNLS. STL. 304 3 9
96 SPACER STNLS. STL. 302 4 8
1 TUBE, INNER .032 THK STNLS. STL. 302 4 7
1 CLOSURE STNLS. STL. 304 2 6
1 INNER TUBE ASS'Y WELD. CONSTR. 12 2 5
1 TUBE, OUTER .032 THK STNLS. STL. 302 4 4
1 FLANGE STNLS. STL. 304 3 3
1 OUTER TUBE ASS'Y WELD. CONSTR. 12 2 2
1
LIST OF MATERIAL
ASSEMBLY APPROVALS
5221 3-2-74 DNC
SHEET 1 2
ISSUE C C
SHEET INDEX
PART CLASSIFICATION
UNCLASSIFIED
SUBE CLASSIFICATION LEVEL
UNCLASSIFIED
TITLE
EXPERIMENTAL CAVITY TUBE
SPR III
D 14213 T24056
SCALE 1/1
SHEET 1 OF 1

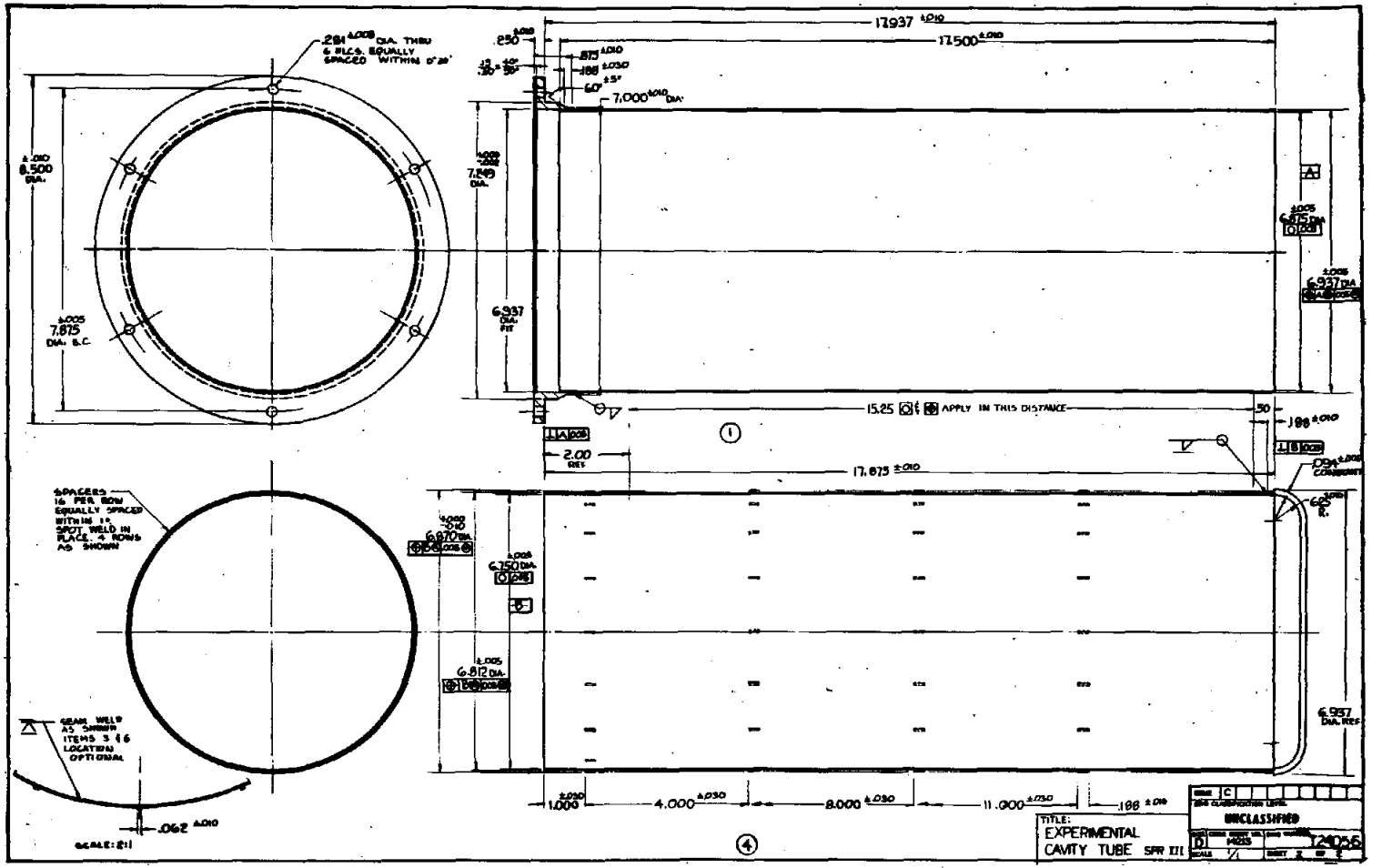
17.937 ±.010
17.500 ±.010
.250
.875 ±.010
.188 ±.030
60° ±5°
7.000 ±.010 DIA.
8.500 DIA.
7.875 DIA. B.C.
7.149 DIA.
6.937 DIA. FIT
6.875 DIA
6.937 DIA
15.25 APPLY IN THIS DISTANCE
.50
.188 ±.010
2.00 REF
17.875 ±.010
.094 ±.005 CONCENTRIC
.625 R.
SPACERS 16 PER ROW EQUALLY SPACED WITHIN 1° SPOT WELD IN PLACE. 4 ROWS AS SHOWN
6.870 DIA
6.350 DIA
6.812 DIA
6.957 DIA. REF
SEAM WELD AS SHOWN ITEMS 3 & 6 LOCATION OPTIONAL
.062 ±.010
SCALE: 2:1
1.000 ±.030
4.000 ±.030
8.000 ±.030
11.000 ±.030
.188 ±.010
TITLE: EXPERIMENTAL CAVITY TUBE SPR III
UNCLASSIFIED
124056

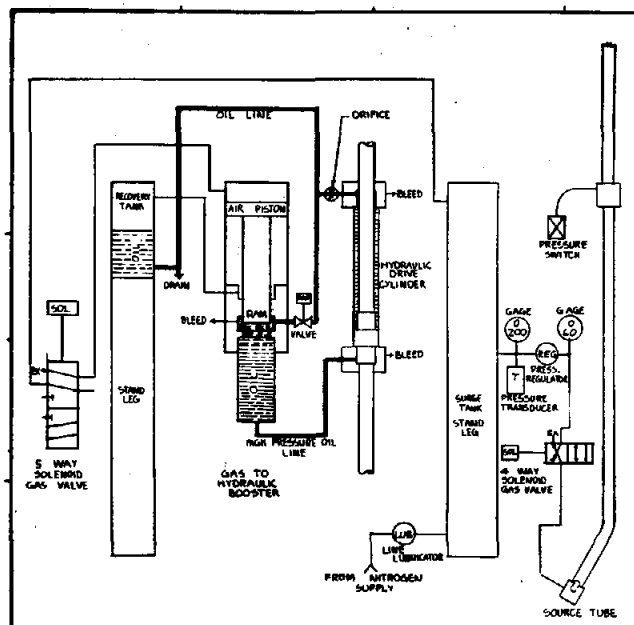

PNEUMATIC - HYDRAULIC SYSTEM
(SCHEMATIC)

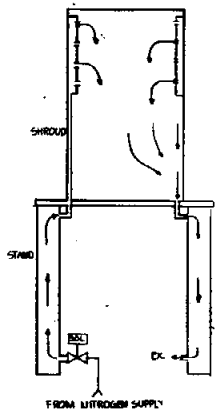

CORE COOLING SYSTEM
(SCHEMATIC)

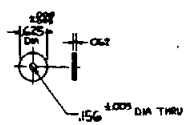

③ ORIFICE

NOTES:-
1. SCHRADER FLUID POWER DIVISION - SCOVILL 6464 EAST FLOTILLA STREET, LAS ANGELES, CALIF. 90022.
2. HOKE INC., ONE TENAKILL PARK, CRESSKILL, N.J. 07626.
3. PARKER - HANNIFIN, 17325 EUCLID AVE., CLEVELAND, OHIO 44112.
4. SWAGELOK, CRAWFORD FITTING CO. 29500 SOLON ROAD, SOLON, O. 44139
5. THE HANSON MANUFACTURING CO., CLEVELAND, OHIO

					60
					59
					58
					57
					56
					55
AR5	TUBING, STEEL	NO. O.D. X .050 WALL			54
AR5	TUBING, STAINLESS STL 316	3/8 O.D. X .035 WALL			53
2	QUICK RELEASE COUPLING	HANSEN # LLB-436	5		52
					51
1	MALE ELBOW	SWAGELOK #400-2-4-316	4		50
1	MALE CONNECTOR	SWAGELOK #400-2-9-316	4		49

LIST OF MATERIAL

T36710

8	MALE CONNECTOR, TERRULOK	PARKER # 10 FSU	3		48
1	45° ELBOW	PARKER # 23730-12-12	3		47
AR5	HOSE, NO SKIVE	PARKER # 421-12	3		46
1	HOSE FITTING	PARKER # 201 BP-8-12	3		45
4	SWIVEL FITTING	PARKER # 20630-12-12	3		44
1	90° LONG ELBOW	PARKER # 24130-12-12	3		43
2	90° ELBOW	PARKER # 23930-12-12	3		42
3	ADAPTOR	PARKER # 0105-16-12	3		41
3	ADAPTOR	PARKER # 0103-12-12	3		40
1	ADAPTOR	PARKER # 0103-8-12	3		39
					38
					37
2	HOSE CLAMP	1 1/2 DIA			36
AR5	HOSE, TYGON	1 1/2 I.D.			35
AR5	HOSE, AIR	1/4 I.D.			34
AR5	TUBING, COPPER	1/4 O.D.			33
2	HOSE CLAMP	FOR 1/4 I.D. AIR HOSE			32
4	NUT, FLARE	1/4 TUBE			31
1	UNION, FLARE	1/4 NPT TO 1/4 TUBE			30
1	UNION, FLARE	1/4 NPT TO 1/4 TUBE			29
2	ELBOW, FLARE	1/4 NPT TO 1/4 TUBE			28
1	ADAPTOR, AIR HOSE	1/4 NPT TO 1/4 AIR HOSE			27
1	ADAPTOR, AIR HOSE	1/4 NPT TO 1/4 AIR HOSE			26
1	TEE	1/4 NPT			25
2	STREET ELL	1 NPT			24
1	NIPPLE	1/4 NPT			23
1	BUSHING	1/4 TO 1/8 NPT			22
1	ELL	1/4 NPT			21
1	PLUG	1/4 NPT			20
1	PLUG	1/2 NPT			19
2	NIPPLE	1/4 NPT			18
2	NIPPLE	1/4 NPT			17
3	NIPPLE	1/4 NPT			16
1	NIPPLE	1/8 NPT			15
2	BUSHING	1/2 TO 1/4 NPT			14
4	BUSHING	1/2 TO 1/8 NPT			13
1	TEE	1/2 NPT			12
1	STREET ELL	1/2 NPT			11
1	45° ELL	1/2 NPT			10
2	ELL	1/2 NPT			9
1	STREET ELL	1/2 NPT			8
4	STREET ELL	1/4 NPT			7
1	ELL 1/2 NPT	1/2 NPT			6
1	STREET TEE	1/2 NPT			5
2	NIPPLE	1 NPT			4
1	ORIFICE	STEEL 1018			3
1	VALVE	HOKE # 212BF4Y	2		2
1	LINE LUBRICATOR	SCHRADER PREF-AIR-1 NPT	1		1

LIST OF MATERIAL

SYO	6-4-15	DMC	A	A	

TITLE: HYDRAULIC-PNEUMATIC LAYOUT

SPR III

PART CLASSIFICATION: UNCLASSIFIED

DWG CLASSIFICATION LEVEL: UNCLASSIFIED

SIZE: D | CODE IDENT NO. 14213 | DWG NO. T36710 | SCALE NONE | SHEET

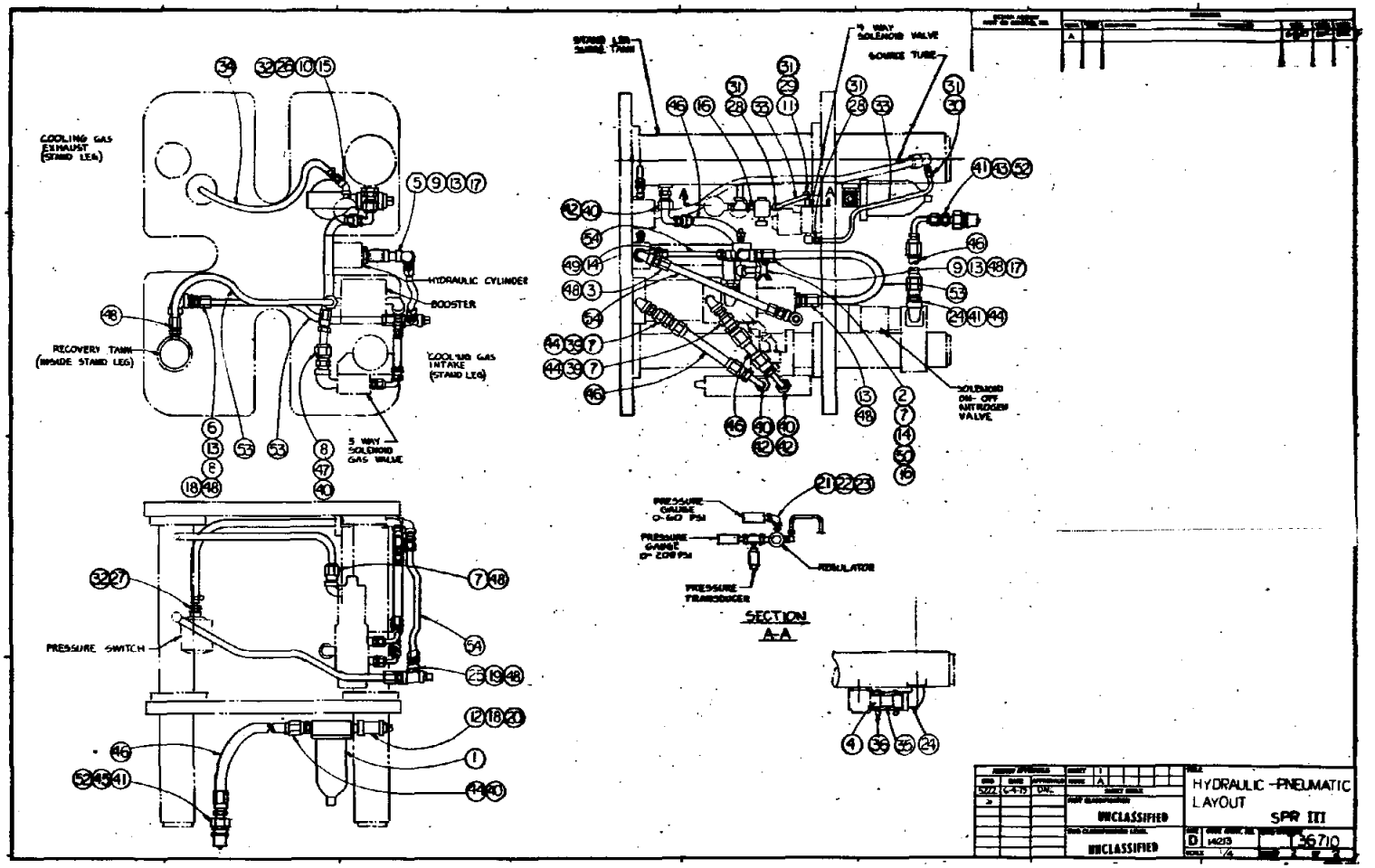
COOLING GAS EXHAUST (STAND LEG)
HYDRAULIC CYLINDER
BOOSTER
RECOVERY TANK (INSIDE STAND LEG)
COOLING GAS INTAKE (STAND LEG)
5 WAY SOLENOID GAS VALVE
PRESSURE SWITCH
3 WAY SOLENOID VALVE
SOURCE TUBE
SOLENOID ON-OFF NITROGEN VALVE
PRESSURE GAUGE 0-60 PSI
PRESSURE GAUGE 0-200 PSI
REGULATOR
PRESSURE TRANSDUCER
SECTION A-A
UNCLASSIFIED
UNCLASSIFIED
HYDRAULIC -PNEUMATIC LAYOUT
SPR III
D 14213
36710

DISTRIBUTION:

US ERDA
Division of Operational Safety
Washington, DC 20545
Attn: M. A. Bell

US ERDA
Albuquerque Operations Office
P. O. Box 5400
Albuquerque, NM 87115
Attn: K. E. Elliott

University of Arizona
Nuclear Engineering Department
Tucson, AZ 85721
Attn: R. L. Seale

University of California
Lawrence Livermore Laboratory
P. O. Box 808
Livermore, CA 94550
Attn: Reports Library

University of Illinois
College of Engineering
Nuclear Engineering Program
214 Nuclear Engineering Laboratory
Urbana, IL 61801
Attn: G. H. Miley

Oak Ridge National Lab
P. O. Box X
Oak Ridge, TN 37830
Attn: L. B. Holland

Los Alamos Scientific Laboratory
P. O. Box 1663
Los Alamos, NM 87544
Attn: Reports Library

White Sands Missile Range
P. O. Box 160
White Sands, NM 88002
Attn: A. De La Paz

Oak Ridge National Lab
HPRR
P. O. Box X
Oak Ridge, TN 37830

University of New Mexico (3)
Department of Nuclear Engineering
Albuquerque, NM 87106
Attn: R. L. Long
R. Knief

Washington State University
Nuclear Radiation Center
Pullman, WA 99163
Attn: G. W. Hinman
W. E. Wilson

5000 A. Narath
5100 J. K. Galt
5200 E. H. Beckner
5400 A. W. Snyder
5420 J. V. Walker
5421 T. R. Schmidt
5421 B. F. Estes
5424 J. A. Reuscher
5700 J. W. Scott
5800 R. S. Claassen
8266 E. A. Aas (2)
3141 C. A. Pepmueller (Actg) (5)
3151 W. L. Garner (3)
For ERDA/TIC (Unlimited Release)
ERDA/TIC (25)
(R. P. Campbell, 3171-1)