SAND 75-0604
Unlimited Distribution

SWL AND BWL: FINITE ELEMENT MODELS OF COMPRESSED MAGNETIC FIELD CURRENT GENERATORS

T. J. Tucker and J. E. Leeman

Prepared by Sandia Laboratories, Albuquerque, New Mexico 87115 and Livermore, California 94550 for the United States Energy Research and Development Administration under Contract AT (29-1)-789

Printed January 1976

Sandia Laboratories

SF 2900 Q(7-73)

When printing a copy of any digitized SAND Report, you are required to update the markings to current standards.

Issued by Sandia Laboratories, operated for the United States Energy Research and Development Administration by Sandia Corporation.

NOTICE

This report was prepared as an account of work sponsored by the United States Government. Neither the United States nor the United States Energy Research and Development Administration, nor any of their employees, nor any of their contractors, subcontractors, or their employees, makes any warranty, express or implied, or assumes any legal liability or responsibility for the accuracy, completeness or usefulness of any information, apparatus, product or process disclosed, or represents that its use would not infringe privately owned rights.

Printed in the United States of America
Available from
National Technical Information Service
U. S. Department of Commerce
5285 Port Royal Road
Springfield, VA 22151
Price: Printed Copy $6.00; Microfiche $2.25

SAND-75-0604

SWL AND BWL: FINITE ELEMENT MODELS OF COMPRESSED MAGNETIC FIELD CURRENT GENERATORS

by

T. J. Tucker
Explosives Physics Division 5131

and

J. E. Leeman
Firing Subsystems Division 2315

Sandia Laboratories
Albuquerque, New Mexico 87115

Printed January 1976

ABSTRACT

Documentation is presented for two new computer codes modeling the behavior of compressed magnetic field current generators. Code output results for typical generator configurations are presented and compared to experimental results.

This Page Intentionally Left Blank

CONTENTS

		Page
I.	INTRODUCTION	5
II.	GENERAL CMF DEVICE CIRCUIT MODEL	9
III.	L(t)-CMF DEVICE INDUCTANCE	13
	A. Unbranched Winding (Code SWL)	13
	B. Branched Coil Inductance (Code BWL)	16
	C. CMF Device Inductance Dependence Upon Armature Expansion	16
IV.	CMF DEVICE RESISTANCE	19
	A. Single Winding Device (Code SWL)	19
	B. Branched Coil Resistance (Code BWL)	20
V.	OUTPUT RESULTS FROM CODES SWL AND BWL	23
VI.	SUMMARY	43
	References	44
	APPENDICES	45
	Appendix 1 - Computer Code SWL Listing	47
	Appendix 2 - Computer Code BWL Listing	59
	Appendix 3 - CMF Device Voltage	77

ILLUSTRATIONS

Figure 1.	CMF Device	6
Figure 2.	Lumped Element CMF Device Schematic	10
Figure 3.	Single Winding CMF Device Element Specification	14
Figure 4.	Example of Branched Coil CMF Device Configuration	17
Figure 5.	Branched Coil Winding Resistance	21

ILLUSTRATIONS

		Page
Table 1.	SWL Code Output Results	25
Table 2.	BWL Code Output Results	28
Table 3.	Exploding Foil Output Results	34
Table 4.	Comparison of Observed Burst Parameters to those Computed by Code BWL	35
Figure 6A.	Current vs Time as Predicted by Code SWL. Code Output Shown as Solid Line; Experimental Results Shown as ●.	36
Figure 6B.	Inductance vs Time as Predicted by Code SWL	37
Figure 6C.	Resistance vs Time as Predicted by Code SWL	38
Figure 7A.	Current vs Time as Predicted by Code BWL	39
Figure 7B.	Inductance vs Time as Predicted by Code BWL	40
Figure 7C.	Resistance vs Time as Predicted by Code BWL	41
Figure 1A.	CMF Device Voltages	80
Figure 2A.	Plot of turn voltage versus time for first (1), 50th (maximum voltage), and last (70th) turn of CMF Device as predicted by code SWL	81

I. INTRODUCTION

The generation of large surge currents by explosively driving conductive armatures into magnetic fields has been the subject of several investigations.[1,2] Basic features of a typical compressed magnetic field (CMF) device utilized in these studies are illustrated in Fig. 1. Briefly, the device is composed of a thin, cylindrical, metal armature explosively expanded into a magnetic field produced by current flowing in a coaxial, helical coil. If it is assumed that the conductivity of both armature and coil remained sufficiently high during expansion that losses from flux diffusion and by ohmic heating may be neglected then flux conservation considerations result in a predicted current of

$$I(t) = \frac{I_o L_o}{L(t)} \tag{1}$$

where I_o, $I(t)$, and L_o, $L(t)$ are initial and instantaneous values of current and inductance, respectively. Since, as will be discussed in a following section, $L(t)$ would be expected to decrease during device operation, a gain in $I(t)$ would result. It should also be noted that the magnetic energy (E_m) of the system is given by $E_m(t) = \frac{1}{2}L(t)I(t)^2$ and thus from Eq. (1)

$$E_m(t) = \left(\frac{L_o I_o^2}{2}\right)\frac{I(t)}{I_o} \tag{2}$$

and the conversion of chemical to magnetic field energy is also proportional to the current gain.

Although Eq. (1) is deceptively simple, its application to systems of practical interest has proved to be difficult. Two basic types of problems are encountered in system modeling. The first is that of expanding Eq. (1) to include realistic system losses. Included are I^2R heating losses in the

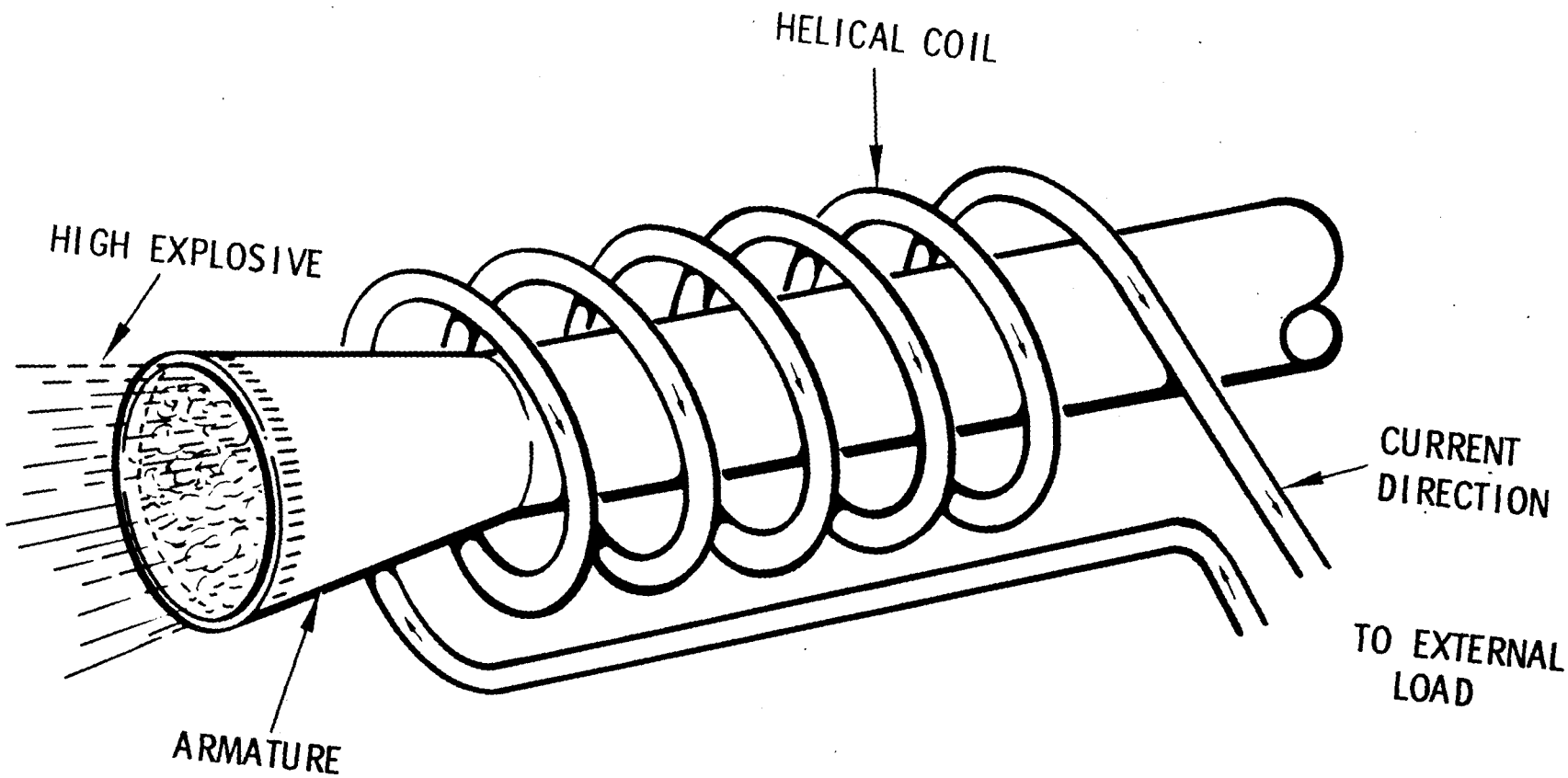

FIGURE 1. CMF Device.

conductors (where, because of skin effect, the actual effective conductor cross section is time varying) and flux loss by diffusion into and through conductors; i.e., flux trapping. In this report only I^2R losses will be treated in detail. Losses resulting from flux trapping and skin effect resistance phenomena must, at present, be approximated. A second major problem in the application of Eq. (1) to CMF devices of engineering importance is the specification of the time dependent inductance function, L(t), for relatively complex geometries. Previous CMF device models have utilized long solenoid inductance functions which provided poor estimates of inductance at late times when the coil has been reduced to only a few turns. It is our intent, in this report, to describe a more general specification of inductance which is valid throughout the operating range of CMF devices and which is sufficiently generalized to be applicable to a wide range of devices and configurations.

In the following section, Eq. (1) will be extended to include resistive losses, and a general lumped circuit model of the CMF device will be developed. Following this, the time dependent functions describing inductance and resistance based upon a finite element description of the device geometry are presented. Output results from computer codes SWL (Appendix 1) and BWL (Appendix 2) evaluating the equations developed in Sections II through IV are presented in Section V and compared to experimental results.

This Page Intentionally Left Blank

II. GENERAL CMF DEVICE CIRCUIT MODEL

A lumped element electrical representation of a typical CMF system is shown schematically in Fig. 2. As indicated, L_c and R_c are the time dependent CMF device inductance and resistance. L_d and R_d are similar parameters describing exterior components and R_f is a time varying load resistance. In operation, switch S1 is closed, injecting an initial current I_o of a few hundred to a few thousand amperes into the loop acdf. Subsequently, armature expansion closes the "crowbar" switch S2 and decreases L_c and R_c by reducing the volume between the coil and armature, and by shorting coil turns. The circuit equation for the device loop bcde following closure of switch S2 is

$$\frac{d}{dt}\left[(L_c + L_d)I(t)\right] + \left[R_c(t) + R_d + R_f(t)\right]I(t) = 0 \quad . \tag{3}$$

For conciseness, let $L(t) = L_c(t) + L_d$ and $R(t) = R_c(t) + R_d + R_f(t)$. Eq. (3) then may be rewritten as

$$\frac{dI(t)}{dt} + \left[\frac{R(t)}{L(t)} + \frac{1}{L(t)}\frac{dL(t)}{dt}\right] I(t) = 0 \tag{4}$$

which upon integration yields the basic CMF device equation

$$I(t) = I_o \frac{L_o}{L(t)} e^{-\int_0^t \frac{R(t)}{L(t)} dt} \tag{5}$$

where I_o and L_o are initial values of current and inductance, respectively. It should be noted that only one loss mechanism is explicitly included in Eq. (5), that associated with the circuit resistance. As has been previously noted additional losses are present as a result of flux diffusion and trapping. Although these losses are not as yet well defined it was shown in Ref. 1 that they may be approximated by simply doubling R(t).

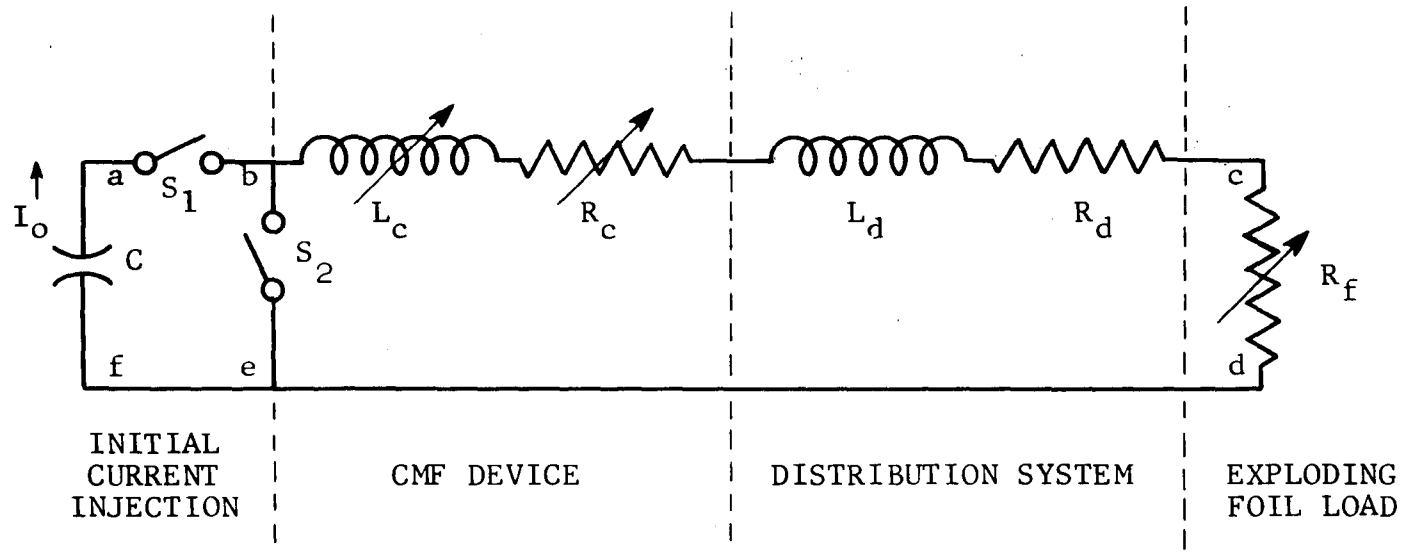

FIGURE 2. Lumped Element CMF Device Schematic.

Codes SWL and BWL include the option to use this approximation for diffusion losses if desired. Equation (5) may be used to predict the behavior of any CMF system provided that the time dependent resistance R(t) and inductance L(t) functions can be defined. It should be pointed out, however, the equation is extremely sensitive to small variations of these functions at late times in the operating cycle when both L(t) and R(t) have decreased by several orders of magnitude. Consequently, a method particularly suited to describe this critical region, the finite element representation of the CMF device, has been developed and is described in the following two sections of this report.

This Page Intentionally Left Blank

III. L(t)-CMF DEVICE INDUCTANCE

A. Unbranched Winding (Code SWL)

The parameters required for the specification of the inductance of a single winding CMF device are illustrated in Fig. 3. As suggested in the figure, both coil and armature are represented as a connected system of simple, coaxial, single turn (loop) elements with no pitch. Utilizing this representation, the inductance of the coil alone may be expressed as[3]

$$L_{coil} = \sum_{i=1}^{n} L_i + \sum_{i=1}^{n} \sum_{j=1}^{n} M_{ij} \quad , \quad i \neq j \tag{6}$$

where L_i = self-inductance of the ith loop,

M_{ij} = mutual inductance between the ith and the jth loop,

L_{coil} = total inductance of the coil,

and n = total number of turns in the coil.

Similarly, if it is assumed that the current distribution in the armature exactly mirrors that in the coil, the armature-to-coil coupling may be represented as

$$L_{(\text{armature to coil})} = \sum_{i=1}^{n} \sum_{j=1}^{n} N_{ij} \quad . \tag{7}$$

where, as before, the N_{ij} are the mutual coupling terms between armature and coil loops. Combining Eqs. (6) and (7) yields the finite-element specification of CMF device inductance, L_{CMF},

$$L_{CMF} = \sum_{i=1}^{n} L_i + \sum_{\substack{i=1 \\ i \neq j}}^{n} \sum_{j=1}^{n} M_{ij} - \sum_{i=1}^{n} \sum_{j=1}^{n} N_{ij} \tag{8}$$

where the N_{ij} are subtractive to account for the necessarily opposite sense of the induced armature current. Prior to evaluation of Eq. (8), it should be

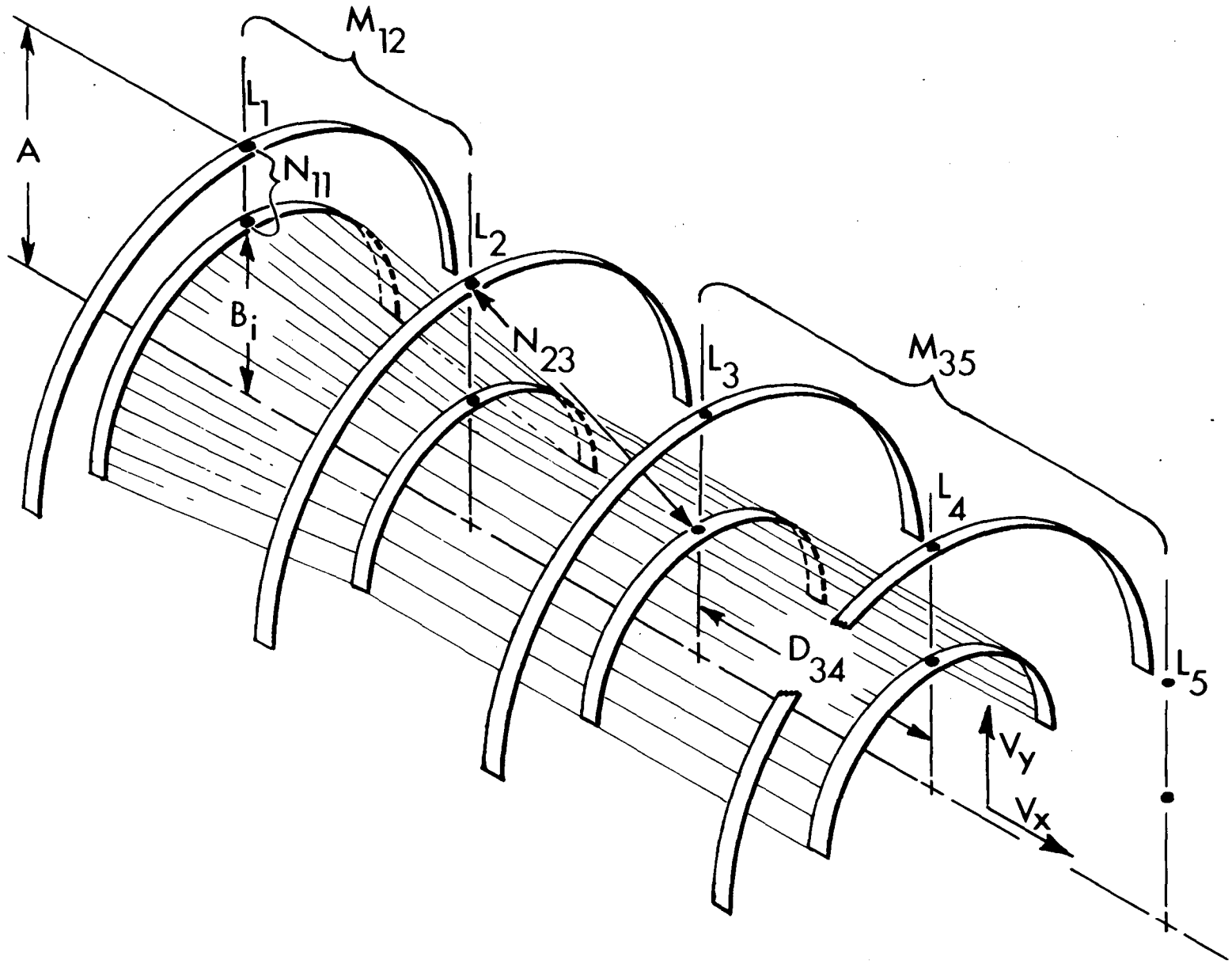

FIGURE 3. Single Winding CMF Device Element Specification.

pointed out that the assumption of a spatially-discrete armature current is probably a good approximation only at close armature-to-coil spacings. By comparison to experimental results, it has been found desirable to account for current redistribution by scaling the N_{ij} terms by the ratio of instantaneous armature to coil radius. This scale factor is included in both codes SWL and BWL.

Reference 3 lists a number of alternative formulae for the computation of loop inductances. The functions utilized in the codes developed here are,

$$L_i = 4\pi A_i \left[\ell n \frac{8A_i}{\rho_i} - 1.75 \right] \qquad \text{Kirchoff's Formula} \tag{9}$$

where A_i and ρ_i are the ith element radius and conductor diameter, respectively and for both mutual terms (M_{ij} and N_{ij})

$$N_{ij} = 4\pi \sqrt{A_i B_j} \left[\left(\frac{2}{K_{ij}} - K_{ij} \right) F - \frac{2}{K_{ij}} E \right] \qquad \text{Maxwell's Formula} \tag{10}$$

where

$$K_{ij} = \frac{2\sqrt{A_i B_j}}{\sqrt{(A_i + B_j)^2 + D_{ij}^2}} \quad ,$$

A_i, B_j, and D_{ij} are element radii and element axial separation respectively, and E and F are the complete elliptical integrals of the first and second kind of modulus K_{ij}. Note that for the computation of the mutual inductances, M_{ij}, that $B_j = A_i$. All terms in Eqs. (9) and (10) are evaluated for each turn at each time iteration in both the SWL and BWL codes.

B. Branched Coil Inductance (Code BWL)

To reduce ohmic heating in the coils of large CMF devices, it is often necessary to increase the cross section of the output turns by splitting of a single winding into two parallel windings and thus doubling the conductor area. A typical configuration of such a branched system is illustrated in Fig. 4. Although mechanically more complex, the finite element representation of such a configuration is straightforward. By inspection of the figure, it can be seen that the previous analysis of single winding CMF devices is directly applicable if elemental loop parameters are identified by both winding and turn number. By inspection of computer code BWL (Appendix 2), it can be seen that all parameters are so doubly subscripted. Several new problems associated with the more complex geometry are apparent, however. First, from Fig. 4, it can be seen that the majority of windings include fractional turns. In code BWL, fractional turns are computed as a complete loop and then linearly scaled as the turn fraction. Secondly, as a result of branching, inductance terms must be scaled to correct for the current splitting into parallel windings. To compensate for current partitioning, all inductances in code BWL are scaled inversely as the number of parallel branches (subroutine SPLIT).

C. CMF Device Inductance Dependence Upon Armature Expansion

By inspection of Fig. 1 and from Eqs. (9) and (10), it can be seen that the time variation of inductance of CMF devices is produced by two different mechanisms. First, prior to armature-coil impact the increase in the armature radii, B_i, results in an increase in the coupling of the imaged armature current, i.e., the $-\sum_i \sum_j N_{ij}$ term of Eq. (9), with a consequent reduction in the system inductance L_{CMF}. Secondly, following armature impact, coil turns are progressively short circuited and are thus actually removed

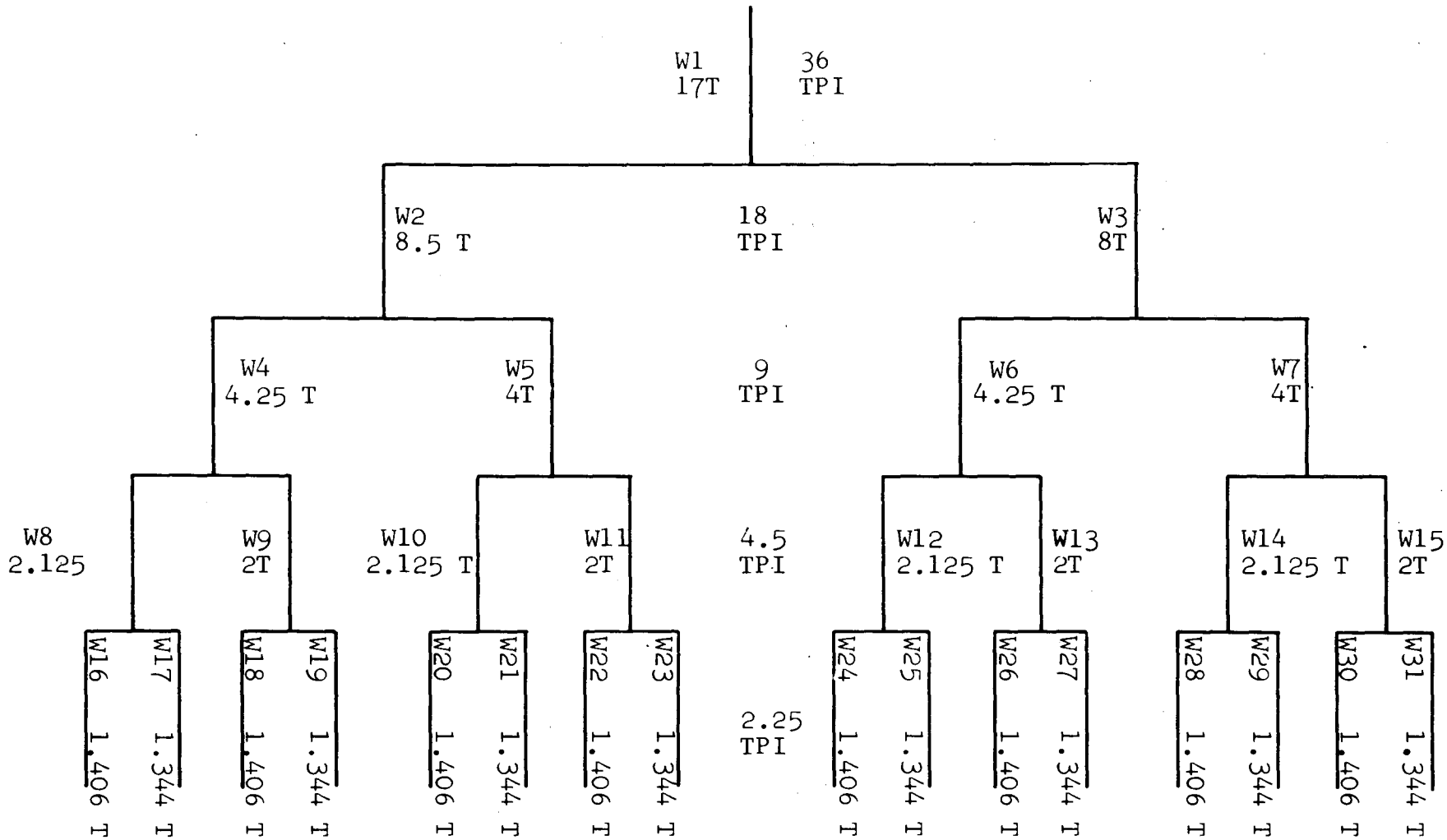

FIGURE 4. Example of Branched Coil CMF Device Configuration Showing Winding Numbers (W), Turns (T) and Turns Per Unit Length (TPI).

from the system. As indicated in Fig. 3, armature motion is defined as a function of two velocities, the axial velocity V_X (typically the explosive detonation velocity) and a radial velocity V_Y which in the codes discussed here is assumed constant and is determined empirically. Codes SWL and BWL then assume that each armature radius B_j is equal to its initial value until the detonation reaches its axial location after which it expands at a constant velocity of V_Y until impact with the coil. Typically $V_Y/V_X \cong 0.25$ and thus the armature expansion angle $\theta \cong 14^\circ$. It should be noted, however, that the armature closure rate of CMF devices is often increased by including an initial armature taper of roughly $\theta/2$ starting at the armature midpoint. Both codes SWL and BWL provide for initial tapers as inputs.

Finally, it should be noted that the finite element representation of CMF devices results in a step discontinuity of inductance during turn removal. To provide a better approximation of turn elimination in a helix, codes SWL and BWL linearly reduce the inductance of the turn being removed to zero in a time corresponding to one turn spacing.

IV. CMF DEVICE RESISTANCE

A. Single Winding Device (Code SWL)

Neglecting nonuniform current distribution effects (skin and proximity effects) the resistance R_c of a single winding CMF device coil is given by

$$R_c(\Gamma,t) = \frac{\rho(\Gamma)\ell(t)}{(\text{wire cross section})} \tag{11}$$

where $\rho(\Gamma)$ is the wire resistivity (a function of temperature Γ) and $\ell(t)$ is the time dependent wire length. Prior to the first armature-coil impact, $\ell(t)$ is constant and is simply the product of the coil circumference, corrected for pitch, and the total turns, n, thus

$$\ell(t) = \frac{2\pi A_1 n}{\cos\theta} \quad , \qquad t \le t_1 \tag{12}$$

$$\text{where } \theta = \text{TAN}^{-1}\,\frac{\text{pitch}}{2\pi A_1} \ ,$$

and it is assumed that the coil is of constant radius A_1 and that the first turn closure time $t_1 = (A_1 - B_1)/V_Y$. For times greater than t_1, $\ell(t)$ should decrease linearly with time and thus

$$\ell(t) = \frac{2\Pi A_1 n}{\cos\theta}\left[1 - \frac{(t - t_1)V_X}{(\text{coil length})}\right] \qquad t > t_1 \ . \tag{13}$$

The time dependent resistivity function $\rho(\Gamma)$ is available for a number of metals as a function of the specific action input, i.e., the time integral of the square of the current density.[4] Tabulated values of this

function for copper are incorporated in codes SWL and BWL to update the coil resistivity after each time step.*

B. Branched Coil Resistance (Code BWL)

The required modifications of Eqs. (11) - (13) to include coil branching are perhaps best illustrated in Fig. 5, a schematic representation of the resistances of windings 1 through 7 of the example coil shown in Fig. 4. By inspection, the coil resistance can be seen to be a series-parallel combination of the winding resistances. For example, Fig. 5 results in a total coil resistance of

$$R_{TOTAL} = R_1 + \frac{\left(R_2 + \frac{R_4 R_5}{R_4 + R_5}\right)\left(R_3 + \frac{R_6 R_7}{R_6 + R_7}\right)}{\left(R_2 + \frac{R_4 R_5}{R_4 + R_5}\right) + \left(R_3 + \frac{R_6 R_7}{R_6 + R_7}\right)} \quad . \tag{14}$$

Equation (14) can, of course, be extended to include any number of windings; code BWL will accommodate up to 31 windings. Individual winding resistances may be computed as before from Eqs. (11), (12) and (13).

---

* Similar resistivity vs specific action data obtained in a study of the behavior of exploding foil slapper detonators is contained in subroutine FOIL and is utilized to predict the behavior of CMF devices firing exploding foil loads.[5] The generation and utilization of such data is described in detail in a number of reports and will not be discussed here.[4] Similarly to the computation of coil resistance, subroutine FOIL provides an updated resistivity for each program time step with its associated action deposition into the foil. In addition, as shown in the following section, subroutine FOIL provides an output listing of the major exploding conductor electrical parameters. It should be noted that exploding foil behavior appears to be somewhat dependent upon current density and upon foil size.[5] It is hoped that these dependencies may soon be better defined, however, at present they must be approximated. As indicated in reference 5 large foils typically exhibit lower resistivities and larger specific actions than that of small foils. For foils greater in cross-section than about 500 mils^2 a better fit to experimental results has been obtained by dividing the small foil resistivity data of reference 5 by 1.5 and multiplying the associated specific action values by the same factor.

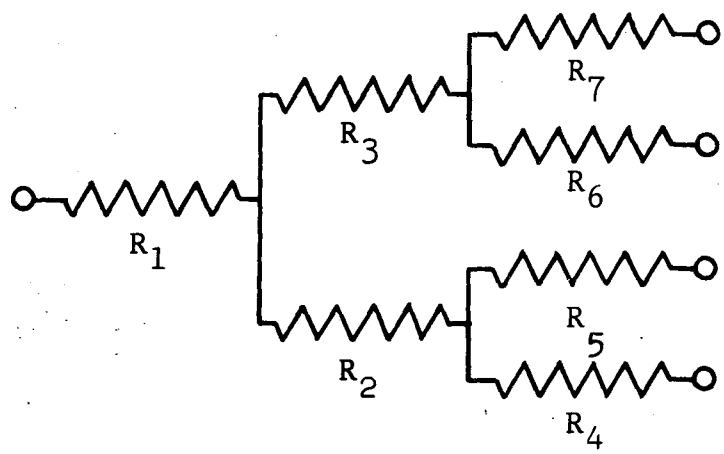

FIGURE 5. Branched Coil Winding Resistance.

This Page Intentionally Left Blank

V. OUTPUT RESULTS FROM CODES SWL AND BWL

Output results from code SWL, simulating a typical single winding CMF device, are shown in Table 1 and graphically in Fig. 6. It should be noted that although agreement between the computed and experimentally measured current is generally good throughout most of the device operating cycle, the predicted current at the end of device operation for most generator-load configurations exceeds that observed. It is probable that this excess is a result of improperly approximating the flux diffusion losses; however, it has been proposed that mechanisms such as internal turn-to-turn or turn-to-armature spark breakdown in the experimental device may be responsible.[2] Such internal voltages are extremely difficult to measure experimentally; however, as discussed in Appendix 3, they may be computed using codes SWL and BWL. Preliminary modeling of some device configurations suggests that high internal voltages are developed in regions of the operating cycle. It is to be hoped that the SWL and BWL computer models coupled with additional experimental studies will soon provide a more complete understanding of the internal voltage distribution in CMF devices. If voltage breakdown is found to be occurring in present CMF devices this new information could lead to designs removing this limitation on performance.

Similar output results for the branched coil CMF device, modeled by code BWL, are shown in Table 2 and Fig. 7. In the example illustrated, the CMF device was modeled with two parallel 0.05 mm (0.002-inch) thick by 9.525 mm (0.375-inch) square exploding-foil loads; foil behavior results are shown in Table 3. It should be noted that foil behavior was scaled to large foil behavior by a 1.5 scale factor. Similar to the results obtained with code SWL, late-time current exceeded that observed experimentally. Through the time of

foil burst, however, a good estimate of device operation was generated; a comparison of predicted and observed foil burst parameters is tabulated in Table 4.

Table 1. SWL Code Output Results

INJ CUR	220.0	COIL ID	1.2000	NO TURNS	70	LOAD L	48.5000	AXIAL VEL	8.4700	RUN TIME	10.000
TPI	56.00	ARM OD	.6260	WIRE DIA	15.9000	LOAD R	.1300	RADIAL VEL	2.1100	T INC	.1000
START TAPER	-0.0000	ANGLE	-0.0000	FLUX LOSS MULT	1.0000						

TIME USEC	CURRENT AMPS	INDUCTANCE UHENRY	RESISTANCE OHM	OUTPUT VOLTS	ACTION A2-SEC	ATTEN	TURNS
0.0000	220	130.6078	1.1183	-62.8	0.	1.00000	70
.1000	220	130.5889	1.1183	-47.2	4.8324E-03	.99829	70
.2000	219	130.5435	1.1183	-25.7	9.6507E-03	.99658	70
.3000	219	130.4691	1.1183	-1.9	1.4457E-02	.99487	70
.4000	219	130.3626	1.1183	24.1	1.9253E-02	.99317	70
.5000	219	130.2212	1.1183	52.5	2.4042E-02	.99147	70
.6000	219	130.0421	1.1183	83.3	2.8827E-02	.98976	70
.7000	219	129.8224	1.1183	116.6	3.3609E-02	.98806	70
.8000	219	129.5586	1.1183	152.9	3.8393E-02	.98636	70
.9000	219	129.2477	1.1184	192.0	4.3182E-02	.98465	70
1.0000	219	128.8875	1.1184	233.3	4.7979E-02	.98295	70
1.1000	219	128.4752	1.1184	277.4	5.2788E-02	.98124	70
1.2000	220	128.0080	1.1184	324.6	5.7613E-02	.97953	70
1.3000	220	127.4830	1.1184	375.0	6.2459E-02	.97782	70
1.4000	221	126.8975	1.1184	428.9	6.7330E-02	.97610	70
1.5000	222	126.2486	1.1184	486.4	7.2232E-02	.97438	70
1.6000	223	125.5322	1.1184	549.0	7.7169E-02	.97265	70
1.7000	224	124.7467	1.1184	614.8	8.2148E-02	.97091	70
1.8000	225	123.8893	1.1184	685.3	8.7175E-02	.96917	70
1.9000	226	122.9572	1.1185	760.8	9.2257E-02	.96741	70
2.0000	228	121.9477	1.1185	841.9	9.7401E-02	.96564	70
2.1000	229	120.8578	1.1185	929.2	1.0261E-01	.96387	70
2.2000	231	119.6847	1.1185	1023.3	1.0791E-01	.96208	70
2.3000	233	118.4251	1.1185	1125.5	1.1329E-01	.96027	70
2.4000	235	117.0756	1.1185	1236.6	1.1877E-01	.95845	70
2.5000	238	115.6345	1.1185	1356.2	1.2436E-01	.95661	70
2.6000	240	114.0997	1.1185	1486.5	1.3008E-01	.95474	70
2.7000	243	112.4655	1.1185	1628.8	1.3593E-01	.95286	70
2.8000	247	110.7319	1.1186	1784.8	1.4194E-01	.95095	70
2.9000	250	108.8951	1.1186	1956.4	1.4812E-01	.94902	70
3.0000	254	106.9521	1.1186	2145.8	1.5449E-01	.94705	70
3.1000	259	104.8990	1.1186	2357.1	1.6108E-01	.94505	70
3.2000	264	102.7336	1.1186	2591.3	1.6791E-01	.94302	70
3.3000	269	100.4530	1.1186	2853.2	1.7501E-01	.94094	70
3.4000	275	98.0537	1.1186	3148.4	1.8241E-01	.93883	70
3.5000	282	95.5146	1.1068	3511.3	1.9017E-01	.93667	69
3.6000	289	92.9487	1.0804	3742.5	1.9831E-01	.93450	67
3.7000	296	90.4131	1.0540	3892.7	2.0687E-01	.93232	65
3.8000	304	87.9314	1.0277	4036.2	2.1588E-01	.93015	63
3.9000	312	85.5073	1.0013	4151.1	2.2536E-01	.92798	61
4.0000	320	83.1476	.9750	4263.2	2.3534E-01	.92580	59
4.1000	328	80.8543	.9486	4371.3	2.4585E-01	.92364	57
4.2000	337	78.6257	.9222	4481.7	2.5691E-01	.92147	56
4.3000	345	76.4652	.8959	4582.5	2.6854E-01	.91931	54
4.4000	354	74.3766	.8695	4670.9	2.8079E-01	.91716	52

Table 1 (Continued)

4.5000	363	72.3616	.8432	4748.9	2.9367E-01	.91503	50
4.6000	372	70.4220	.8168	4814.6	3.0720E-01	.91290	48
4.7000	382	68.5534	.7904	4865.9	3.2143E-01	.91079	46
4.8000	391	66.7734	.7641	4900.5	3.3636E-01	.90870	44
4.9000	400	65.0711	.7377	4917.4	3.5201E-01	.90663	43
5.0000	410	63.4455	.7113	4921.4	3.6842E-01	.90459	41
5.1000	419	61.9036	.6850	4890.7	3.8559E-01	.90258	39
5.2000	428	60.4467	.6586	4833.7	4.0353E-01	.90060	37
5.3000	437	59.0737	.6323	4734.9	4.2224E-01	.89866	35
5.4000	446	57.8000	.6059	4618.3	4.4173E-01	.89675	33
5.5000	454	56.6883	.5795	4471.2	4.6198E-01	.89490	31
5.6000	462	55.5853	.5531	4292.7	4.8299E-01	.89309	29
5.7000	470	54.4950	.5268	4066.6	5.0472E-01	.89134	28
5.8000	477	53.5739	.5004	3824.5	5.2715E-01	.88965	26
5.9000	484	52.7416	.4740	3554.8	5.5023E-01	.88802	24
6.0000	490	52.0008	.4476	3243.4	5.7393E-01	.88646	22
6.1000	495	51.3454	.4213	2919.0	5.9819E-01	.88497	20
6.2000	500	50.7811	.3949	2585.0	6.2295E-01	.88356	18
6.3000	504	50.3012	.3685	2218.6	6.4815E-01	.88222	16
6.4000	507	49.9018	.3421	1866.4	6.7371E-01	.88097	15
6.5000	510	49.5820	.3157	1504.0	6.9958E-01	.87981	13
6.6000	511	49.3688	.2893	992.3	7.2565E-01	.87873	11
6.7000	512	49.2248	.2629	660.7	7.5186E-01	.87775	9
6.8000	513	49.0808	.2365	677.1	7.7816E-01	.87686	7
6.9000	514	48.9358	.2101	693.7	8.0456E-01	.87606	5
7.0000	515	48.7929	.1837	710.6	8.3108E-01	.87535	3
7.1000	517	48.5459	.1573	727.7	8.5771E-01	.87474	1
7.2000	518	48.5049	.1309	745.1	8.8447E-01	.87422	0
7.3000	518	48.5000	.1300	25.4	9.1128E-01	.87375	0
7.4000	517	48.5000	.1300	.0	9.3806E-01	.87328	0
7.5000	517	48.5000	.1300	.0	9.6481E-01	.87282	0
7.6000	517	48.5000	.1300	.0	9.9154E-01	.87235	0
7.7000	517	48.5000	.1300	.0	1.0182E+00	.87188	0
7.8000	516	48.5000	.1300	.0	1.0449E+00	.87141	0
7.9000	516	48.5000	.1300	.0	1.0715E+00	.87095	0
8.0000	516	48.5000	.1300	.0	1.0982E+00	.87048	0
8.1000	515	48.5000	.1300	.0	1.1247E+00	.87001	0
8.2000	515	48.5000	.1300	.0	1.1513E+00	.86955	0
8.3000	515	48.5000	.1300	.0	1.1778E+00	.86908	0
8.4000	515	48.5000	.1300	.0	1.2043E+00	.86861	0
8.5000	514	48.5000	.1300	.0	1.2308E+00	.86815	0
8.6000	514	48.5000	.1300	.0	1.2572E+00	.86768	0
8.7000	514	48.5000	.1300	.0	1.2836E+00	.86722	0
8.8000	514	48.5000	.1300	.0	1.3100E+00	.86675	0
8.9000	513	48.5000	.1300	.0	1.3364E+00	.86629	0
9.0000	513	48.5000	.1300	.0	1.3627E+00	.86583	0
9.1000	513	48.5000	.1300	.0	1.3890E+00	.86536	0
9.2000	512	48.5000	.1300	.0	1.4153E+00	.86490	0

Table 1 (Continued)

9.3000	512	48.5000	.1300	.0	1.4415E+00	.86443	0
9.4000	512	48.5000	.1300	.0	1.4677E+00	.86397	0
9.5000	512	48.5000	.1300	.0	1.4939E+00	.86351	0
9.6000	511	48.5000	.1300	.0	1.5201E+00	.86304	0
9.7000	511	48.5000	.1300	.0	1.5462E+00	.86258	0
9.8000	511	48.5000	.1300	.0	1.5723E+00	.86212	0
9.9000	510	48.5000	.1300	.0	1.5984E+00	.86166	0
10.0000	510	48.5000	.1300	.0	1.6244E+00	.86120	0

THE NUMBER OF SC 4020 FRAMES IN FILE 9 IS 6

THE NUMBER OF 60-BIT WORDS TRANSMITTED TO FILE 9 IS 3024

Table 2. BWL Code Output Results

INJ CUR	2300.0	COIL ID	2.3870	ARM DIST	1.710	LOAD L	.0100	AXIAL VEL	8.8000	RUN TIME	13.000				
WIRE DIA	22.5700	ARM OD	1.3450	ARM ANGLE	7.000	LOAD R	.0150	RADIAL VEL	2.2000	T INC	1.0000				
FLUX LOSS MULTIPLIER	1.0000														

WND	1	TURNS	17.000	TPI	36.000	WND	2	TURNS	8.500	TPI	18.000	WND	3	TURNS	8.000	TPI	18.000
WND	4	TURNS	4.250	TPI	9.000	WND	5	TURNS	4.000	TPI	9.000	WND	6	TURNS	4.250	TPI	9.000
WND	7	TURNS	4.000	TPI	9.000	WND	8	TURNS	2.125	TPI	4.500	WND	9	TURNS	2.000	TPI	4.500
WND	10	TURNS	2.125	TPI	4.500	WND	11	TURNS	2.000	TPI	4.500	WND	12	TURNS	2.125	TPI	4.500
WND	13	TURNS	2.000	TPI	4.500	WND	14	TURNS	2.125	TPI	4.500	WND	15	TURNS	2.000	TPI	4.500
WND	16	TURNS	1.406	TPI	2.250	WND	17	TURNS	1.344	TPI	2.250	WND	18	TURNS	1.406	TPI	2.250
WND	19	TURNS	1.344	TPI	2.250	WND	20	TURNS	1.406	TPI	2.250	WND	21	TURNS	1.344	TPI	2.250
WND	22	TURNS	1.406	TPI	2.250	WND	23	TURNS	1.344	TPI	2.250	WND	24	TURNS	1.406	TPI	2.250
WND	25	TURNS	1.344	TPI	2.250	WND	26	TURNS	1.406	TPI	2.250	WND	27	TURNS	1.344	TPI	2.250
WND	28	TURNS	1.406	TPI	2.250	WND	29	TURNS	1.344	TPI	2.250	WND	30	TURNS	1.406	TPI	2.250
WND	31	TURNS	1.344	TPI	2.250	WND											

TIME USEC	CURRENT AMPS	INDUCTANCE UHENRY	RESISTANCE OHM	OUTPUT VOLTS	ACTION AZ-SEC	ATTEN	WINDING	TURN
0.0000	2300	42.1573	.3282	34.5	0.	1.00000	0	0
1.0000	2303	41.4483	.3282	34.6	5.2967E+00	.98442	0	0
2.0000	2395	39.2125	.3289	36.8	1.0816E+01	.96850	0	0
3.0000	2590	35.6272	.3296	40.8	1.7037E+01	.95156	0	0
4.0000	2944	30.7240	.3304	47.7	2.4723E+01	.93272	0	0
5.0000	3622	24.3715	.3315	61.1	3.5613E+01	.91027	0	0
6.0000	5247	16.2563	.3329	95.0	5.5938E+01	.87978	0	0
7.0000	11656	7.0081	.1600	238.9	1.3764E+02	.84248	1	13
8.0000	24516	3.1884	.0677	436.3	5.0610E+02	.80618	3	4
9.0000	52286	1.4305	.0328	1062.0	2.1735E+03	.77137	7	1
9.1000	55906	1.3315	.0324	1200.7	2.4665E+03	.76773	7	1
9.2000	59263	1.2499	.0314	1224.7	2.7984E+03	.76394	7	2
9.3000	63114	1.1677	.0303	1331.8	3.1731E+03	.76005	7	2
9.4000	67969	1.0785	.0293	1505.0	3.6033E+03	.75603	7	2
9.5000	72435	1.0065	.0282	1533.1	4.0966E+03	.75187	7	3
9.6000	77240	.9385	.0271	1639.1	4.6573E+03	.74760	7	3
9.7000	83842	.8595	.0260	1917.9	5.3071E+03	.74320	7	3
9.8000	103852	.6896	.0224	3558.7	6.1978E+03	.73855	7	5
9.9000	107189	.6537	.0221	1941.6	7.3115E+03	.73371	7	5
10.0000	111414	.6342	.0218	2093.7	8.5067E+03	.72876	7	5
10.1000	116849	.6005	.0213	2295.8	9.8099E+03	.72370	7	5
10.2000	120517	.5781	.0212	2175.0	1.1219E+04	.71850	15	1

Table 2 (Continued)

10.3000	124884	.5537	.0210	2309.9	1.2725E+04	.71316	15	1
10.4000	130380	.5263	.0208	2505.3	1.4355E+04	.70766	15	1
10.5000	137334	.4956	.0206	2755.4	1.6148E+04	.70194	15	1
10.6000	146241	.4614	.0204	3084.3	1.8160E+04	.69594	15	1
10.7000	157896	.4234	.0203	3534.0	2.0476E+04	.68954	15	1
10.8000	170658	.3879	.0202	3836.1	2.3179E+04	.68266	15	1
10.9000	243935	.2680	.0189	10986.7	2.7610E+04	.67435	15	3
11.0000	249741	.2598	.0193	4326.7	3.3704E+04	.66463	15	3
11.1000	257722	.2482	.0200	4863.9	4.0143E+04	.65435	15	3
11.2000	269028	.2319	.0207	5166.0	4.7083E+04	.64330	15	3
11.3000	287043	.2132	.0216	6187.4	5.4022E+04	.63115	31	1
11.4000	314071	.1906	.0229	7413.6	6.3873E+04	.61733	31	1
11.5000	348046	.1673	.0264	8618.1	7.4862E+04	.60041	31	1
11.6000	385064	.1432	.0549	9477.8	8.8333E+04	.56880	31	1
11.7000	430650	.1184	.0472	11018.4	1.0502E+05	.52603	31	1
11.8000	505834	.0929	.0395	15105.9	1.2709E+05	.48443	31	1
11.9000	640798	.0657	.0341	23108.4	1.6041E+05	.44113	31	1
12.0000	884039	.0428	.0306	37584.7	2.2002E+05	.39026	31	2
12.1000	1720518	.0150	.0232	109455.6	4.0710E+05	.31939	31	2
12.2000	2287786	.0100	.0174	91043.5	8.1681E+05	.23595	XXXXXXXXXXXXXXX	
12.3000	1645181	.0100	.0156	-39582.7	1.2138E+06	.16967	XXXXXXXXXXXXXXX	
12.4000	1208349	.0100	.0153	-25558.0	1.4222E+06	.12462	XXXXXXXXXXXXXXX	
12.5000	891031	.0100	.0152	-18366.3	1.5349E+06	.09190	XXXXXXXXXXXXXXX	
12.6000	657702	.0100	.0152	-13467.4	1.5962E+06	.06783	XXXXXXXXXXXXXXX	
12.7000	485669	.0100	.0152	-9918.3	1.6296E+06	.05009	XXXXXXXXXXXXXXX	
12.8000	358702	.0100	.0151	-7316.2	1.6479E+06	.03699	XXXXXXXXXXXXXXX	
12.9000	264953	.0100	.0151	-5400.6	1.6578E+06	.02733	XXXXXXXXXXXXXXX	
13.0000	195715	.0100	.0151	-3988.0	1.6632E+06	.02018	XXXXXXXXXXXXXXX	

Table 2 (Continued)

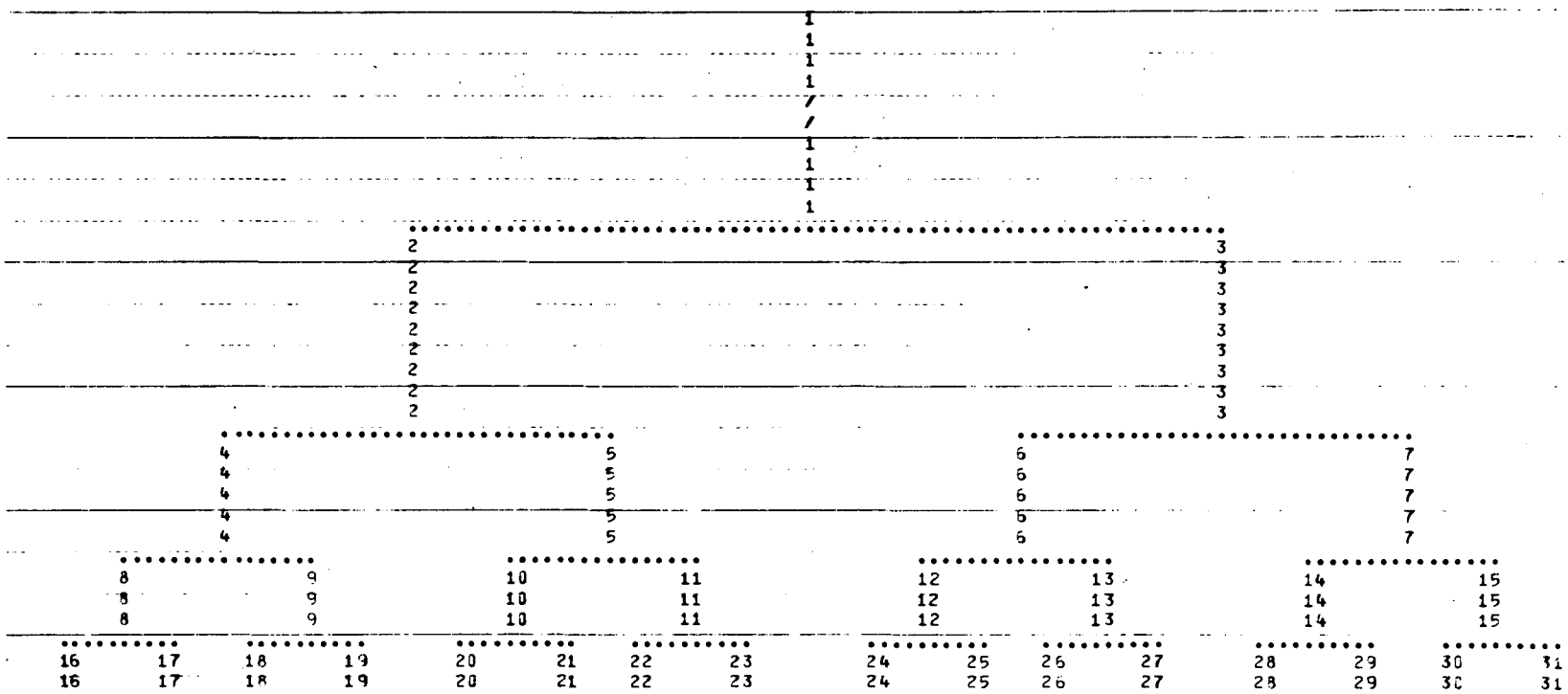

Table 2 (Continued)

	AXIAL DIST CM	CLOSURE TIME USEC	ARMATURE RADIUS CM		WINDING	TURN
	0.0000	6.0152	1.6795		1	1
	.0706	6.0954	1.6795		1	2
	.1411	6.1755	1.6795		1	3
	.2117	6.2557	1.6795		1	4
	.2822	6.3359	1.6795		1	5
	.3528	6.4161	1.6795		1	6
	.4233	6.4962	1.6795		1	7
	.4939	6.5764	1.6795		1	8
	.5644	6.6566	1.6795		1	9
	.6350	6.7368	1.6795		1	10
	.7056	6.8169	1.6795		1	11
	.7761	6.8971	1.6795		1	12
	.8467	6.9773	1.6795		1	13
	.9172	7.0575	1.6795		1	14
	.9878	7.1377	1.6795		1	15
	1.0583	7.2178	1.6795		1	16
	1.1289	7.2980	1.6795		1	17
	1.1289	7.2980	1.6795		1	18
END	1.1994 END	7.3782 END	1.6795 END	END	END	
	1.1994	7.3782	1.6795		2	1
	1.3406	7.5385	1.6795		2	2
	1.4817	7.6989	1.6795		2	3
	1.6228	7.8592	1.6795		2	4
	1.7639	8.0196	1.6795		2	5
	1.9050	8.1800	1.6795		2	6
	2.0461	8.3403	1.6795		2	7
	2.1872	8.5007	1.6795		2	8
	2.3283	8.6610	1.6795		2	9
END	2.3989 END	8.7412 END	1.6795 END	END	END	
	1.2705	7.4584	1.6795		3	1
	1.4111	7.6187	1.6795		3	2
	1.5522	7.7791	1.6795		3	3
	1.6933	7.9394	1.6795		3	4
	1.8344	8.0998	1.6795		3	5
	1.9756	8.2601	1.6795		3	6
	2.1167	8.4205	1.6795		3	7
	2.2578	8.5808	1.6795		3	8
	2.2578	8.5808	1.6795		3	9
END	2.3989 END	8.7412 END	1.6795 END	END	END	
	2.3989	8.7412	1.6795		4	1
	2.6811	9.0619	1.6795		4	2
	2.9633	9.3826	1.6795		4	3
	3.2456	9.7033	1.6795		4	4
	3.5278	10.0240	1.6795		4	5
END	3.5983 END	10.1042 END	1.6795 END	END	END	
	2.4694	8.8214	1.6795		5	1
	2.7517	9.1421	1.6795		5	2
	3.0339	9.4628	1.6795		5	3
	3.3161	9.7835	1.6795		5	4
	3.3161	9.7835	1.6795		5	5
END	3.5983 END	10.1042 END	1.6795 END	END	END	
	2.3989	8.7412	1.6795		6	1
	2.6811	9.0619	1.6795		6	2
	2.9633	9.3826	1.6795		6	3
	3.2456	9.7033	1.6795		6	4
	3.5278	10.0240	1.6795		6	5
END	3.5983 END	10.1042 END	1.6795 END	END	END	
	2.4694	8.8214	1.6795		7	1
	2.7517	9.1421	1.6795		7	2
	3.0339	9.4628	1.6795		7	3
	3.3161	9.7835	1.6795		7	4

Table 2 (Continued)

END	3.5983 END	10.1042 END	1.6795 END	END	END		
	3.5983	10.1042	1.6795		8	1	
	4.1628	10.7456	1.6795		8	2	
	4.7272	11.1728	1.7266		8	3	
END	4.7978 END	11.2136 END	1.7353 END	END	END		
	3.6689	10.1844	1.6795		9	1	
	4.2333	10.8258	1.6795		9	2	
	4.2333	10.8258	1.6795		9	3	
END	4.7978 END	11.2136 END	1.7353 END	END	END		
	3.5983	10.1042	1.6795		10	1	
	4.1628	10.7456	1.6795		10	2	
	4.7272	11.1728	1.7266		10	3	
END	4.7978 END	11.2136 END	1.7353 END	END	END		
	3.6689	10.1844	1.6795		11	1	
	4.2333	10.8258	1.6795		11	2	
	4.2333	10.8258	1.6795		11	3	
END	4.7978 END	11.2136 END	1.7353 END	END	END		
	3.5983	10.1042	1.6795		12	1	
	4.1628	10.7456	1.6795		12	2	
	4.7272	11.1728	1.7266		12	3	
END	4.7978 END	11.2136 END	1.7353 END	END	END		
	3.6689	10.1844	1.6795		13	1	
	4.2333	10.8258	1.6795		13	2	
	4.2333	10.8258	1.6795		13	3	
END	4.7978 END	11.2136 END	1.7353 END	END	END		
	3.5983	10.1042	1.6795		14	1	
	4.1628	10.7456	1.6795		14	2	
	4.7272	11.1728	1.7266		14	3	
END	4.7978 END	11.2136 END	1.7353 END	END	END		
	3.6689	10.1844	1.6795		15	1	
	4.2333	10.8258	1.6795		15	2	
	4.2333	10.8258	1.6795		15	3	
END	4.7978 END	11.2136 END	1.7353 END	END	END		
	4.7978	11.2136	1.7353		16	1	
	5.9267	11.8665	1.8739		16	2	
END	6.3853 END	12.1317 END	1.9302 END	END	END		
	4.8683	11.2544	1.7439		17	1	
	5.9972	11.9073	1.8825		17	2	
END	6.3853 END	12.1317 END	1.9302 END	END	END		
	4.7978	11.2136	1.7353		18	1	
	5.9267	11.8665	1.8739		18	2	
END	6.3853 END	12.1317 END	1.9302 END	END	END		
	4.8683	11.2544	1.7439		19	1	
	5.9972	11.9073	1.8825		19	2	
END	6.3853 END	12.1317 END	1.9302 END	END	END		
	4.7978	11.2136	1.7353		20	1	
	5.9267	11.8665	1.8739		20	2	
END	6.3853 END	12.1317 END	1.9302 END	END	END		
	4.8683	11.2544	1.7439		21	1	
	5.9972	11.9073	1.8825		21	2	
END	6.3853 END	12.1317 END	1.9302 END	END	END		
	4.7978	11.2136	1.7353		22	1	
	5.9267	11.8665	1.8739		22	2	
END	6.3853 END	12.1317 END	1.9302 END	END	END		
	4.8683	11.2544	1.7439		23	1	
	5.9972	11.9073	1.8825		23	2	
END	6.3853 END	12.1317 END	1.9302 END	END	END		
	4.7978	11.2136	1.7353		24	1	
	5.9267	11.8665	1.8739		24	2	
END	6.3853 END	12.1317 END	1.9302 END	END	END		
	4.8683	11.2544	1.7439		25	1	
	5.9972	11.9073	1.8825		25	2	
END	6.3853 END	12.1317 END	1.9302 END	END	END		
	4.7978	11.2136	1.7353		26	1	
	5.9267	11.8665	1.8739		26	2	

Table 2 (Continued)

END	6.3853 END	12.1317 END	1.9302 END	END	END	
	4.8683	11.2544	1.7439		27	1
	5.9972	11.9073	1.8825		27	2
END	6.3853 END	12.1317 END	1.9302 END	END	END	
	4.7978	11.2136	1.7353		28	1
	5.9267	11.8665	1.8739		28	2
END	6.3853 END	12.1317 END	1.9302 END	END	END	
	4.8683	11.2544	1.7439		29	1
	5.9972	11.9073	1.8825		29	2
END	6.3853 END	12.1317 END	1.9302 END	END	END	
	4.7978	11.2136	1.7353		30	1
	5.9267	11.8665	1.8739		30	2
END	6.3853 END	12.1317 END	1.9302 END	END	END	
	4.8683	11.2544	1.7439		31	1
	5.9972	11.9073	1.8825		31	2
END	6.3853 END	12.1317 END	1.9302 END	END	END	

THE NUMBER OF SC 4020 FRAMES IN FILE 9 IS 5

THE NUMBER OF 60-BIT WORDS TRANSMITTED TO FILE 9 IS 2142

Table 3. Exploding Foil Output Results

	TIME MICROSEC	CURRENT AMPS	VOLTS	OHMS	POWER KILOWATTS	ENERGY MILLIJ	ACTION AMP2 SEC	GDENS AMP2 SEC/MM4	EDENS J/GM
S	0.000	2300.0	1.9	.00083	4.374	0.00	0.0000	0.	0.000
S	1.000	2302.9	1.9	.00083	4.386	4.38	5.2967	5.6557E+00	.176
S	2.000	2394.8	2.0	.00083	4.744	8.94	10.8159	1.1549E+01	.360
S	3.000	2589.7	2.1	.00083	5.549	14.09	17.0369	1.8192E+01	.566
S	4.000	2943.6	2.4	.00083	7.172	20.45	24.7226	2.6398E+01	.822
S	5.000	3621.5	3.0	.00083	10.861	29.47	35.6125	3.8026E+01	1.184
S	6.000	5247.5	4.3	.00083	22.824	45.31	55.9383	5.9730E+01	1.861
S	7.000	11656.4	9.7	.00083	113.034	114.24	137.6424	1.4697E+02	4.592
S	8.000	24516.3	20.7	.00085	509.292	424.90	506.1017	5.4041E+02	17.079
S	9.000	52285.6	47.8	.00091	2500.190	1929.14	2173.5174	2.3208E+03	77.542
S	9.100	55906.2	52.0	.00093	2906.649	2199.43	2466.4818	2.6337E+03	83.409
S	9.200	59263.3	56.1	.00095	3321.769	2510.91	2798.3639	2.9880E+03	100.926
S	9.300	63114.3	60.8	.00096	3835.611	2868.77	3173.1418	3.3882E+03	115.311
S	9.400	67969.3	66.8	.00098	4539.080	3287.51	3603.3040	3.8475E+03	132.142
S	9.500	72434.7	72.7	.00100	5269.220	3777.92	4096.6344	4.3743E+03	151.854
S	9.600	77240.1	79.4	.00103	6133.660	4348.07	4657.2751	4.9730E+03	174.771
S	9.700	83842.5	88.5	.00106	7421.946	5025.85	5307.0550	5.6668E+03	202.015
S	9.800	103851.7	113.8	.00110	11813.857	5987.64	6197.7917	6.6179E+03	240.674
S	9.900	107189.0	122.6	.00114	13146.197	7235.64	7311.5249	7.8071E+03	290.838
S	10.000	111414.1	133.1	.00119	14831.696	8634.54	8506.6541	9.0833E+03	347.066
S	10.100	115844.8	146.6	.00125	17124.355	10232.34	9809.9444	1.0475E+04	411.290
S	10.200	120517.3	160.1	.00133	19290.805	12053.10	11218.8012	1.1979E+04	484.476
S	10.300	124883.9	174.2	.00139	21753.821	14105.33	12724.8215	1.3587E+04	566.965
S	10.400	130380.2	189.0	.00145	24646.778	16425.36	14354.5700	1.5328E+04	660.219
S	10.500	137333.7	213.1	.00155	29261.281	19120.76	16147.5465	1.7242E+04	768.561
S	10.600	146240.9	251.2	.00172	36734.261	22420.54	18159.8932	1.9391E+04	901.196
S	10.700	157896.1	301.4	.00191	47591.277	26636.81	20475.7714	2.1864E+04	1070.670
S	10.800	170658.0	363.9	.00213	62096.144	32121.19	23178.5383	2.4750E+04	1291.115
S+L	10.900	243934.9	643.5	.00264	156973.846	43074.69	27609.9594	2.9481E+04	1731.393
L	11.000	249740.9	856.5	.00343	213906.787	61618.72	33703.6985	3.5988E+04	2476.772
L	11.100	257721.9	1122.5	.00436	289301.249	86779.12	40143.2542	4.2864E+04	3488.098
L+V	11.200	269028.1	1454.6	.00541	391320.838	120810.22	47083.0882	5.0274E+04	4855.983
L+V	11.300	287045.3	1946.7	.00678	558780.433	168315.29	54821.6426	5.8538E+04	6765.455
ARC	11.400	314071.1	3285.5	.01046	1031881.104	247848.36	63873.4236	6.8203E+04	9962.297
ARC	11.500	348045.7	13587.5	.03904	4729065.509	535895.69	74862.2443	7.9937E+04	21540.397
ARC	11.600	385063.8	12142.9	.03153	4675781.420	1006138.04	88332.7390	9.4320E+04	40441.849
ARC	11.700	430650.1	10315.1	.02395	4442216.639	1462037.94	105019.4207	1.1214E+05	58766.805
ARC	11.800	505833.7	9468.1	.01872	4789299.573	1923613.75	127085.7852	1.3570E+05	77319.905
EXT	11.900	640798.1	9830.2	.01534	6299155.425	2478036.50	160410.2857	1.7128E+05	99605.000
EXT	12.000	884039.2	7208.8	.00815	6372828.533	3111635.70	220017.6649	2.3493E+05	125072.602
EXT	12.100	1720518.0	4097.8	.00238	7050404.311	3782797.34	407103.0431	4.3470E+05	152050.031
EXT	12.200	2287785.5	1353.6	.00059	3096652.657	4290150.19	816810.2858	8.7218E+05	172443.145
EXT	12.300	1645181.0	440.8	.00027	725118.775	4481238.76	1213839.4424	1.2961E+06	180123.975
EXT	12.400	1208348.9	235.8	.00020	284959.014	4531742.65	1422175.8220	1.5186E+06	182153.986
EXT	12.500	891031.2	149.3	.00017	133027.798	4552641.99	1534878.0094	1.6389E+06	182994.037
EXT	12.600	657702.2	101.9	.00015	67017.222	4562644.25	1596203.4542	1.7044E+06	183396.079
EXT	12.700	485659.1	72.2	.00015	35059.798	4567748.10	1629625.7887	1.7401E+06	183601.229
EXT	12.800	358702.0	52.1	.00015	18704.017	4570436.29	1647852.8661	1.7595E+06	183709.281
EXT	12.900	264952.8	38.1	.00014	10082.752	4571875.63	1657796.2207	1.7702E+06	183767.136
EXT	13.000	195715.5	27.9	.00014	5465.808	4572653.05	1663221.4475	1.7760E+06	183798.384

Table 4. Comparison of Observed Burst Parameters to those Computed by Code BWL.

Burst Parameter	Predicted Value	Observed Value
Current kA	474.3	457.2
Voltage kV	12.1	11.7
Resistance Ω	0.0255	0.0259
Power GW	5.737	5.331
Energy J	545.	1132.*
Action A^2 sec	110000.	107200.

*Note: Computed as the integral of the measured voltage times current uncorrected for inductive drop. Considerable evidence now exists indicating that the experimental value is high.

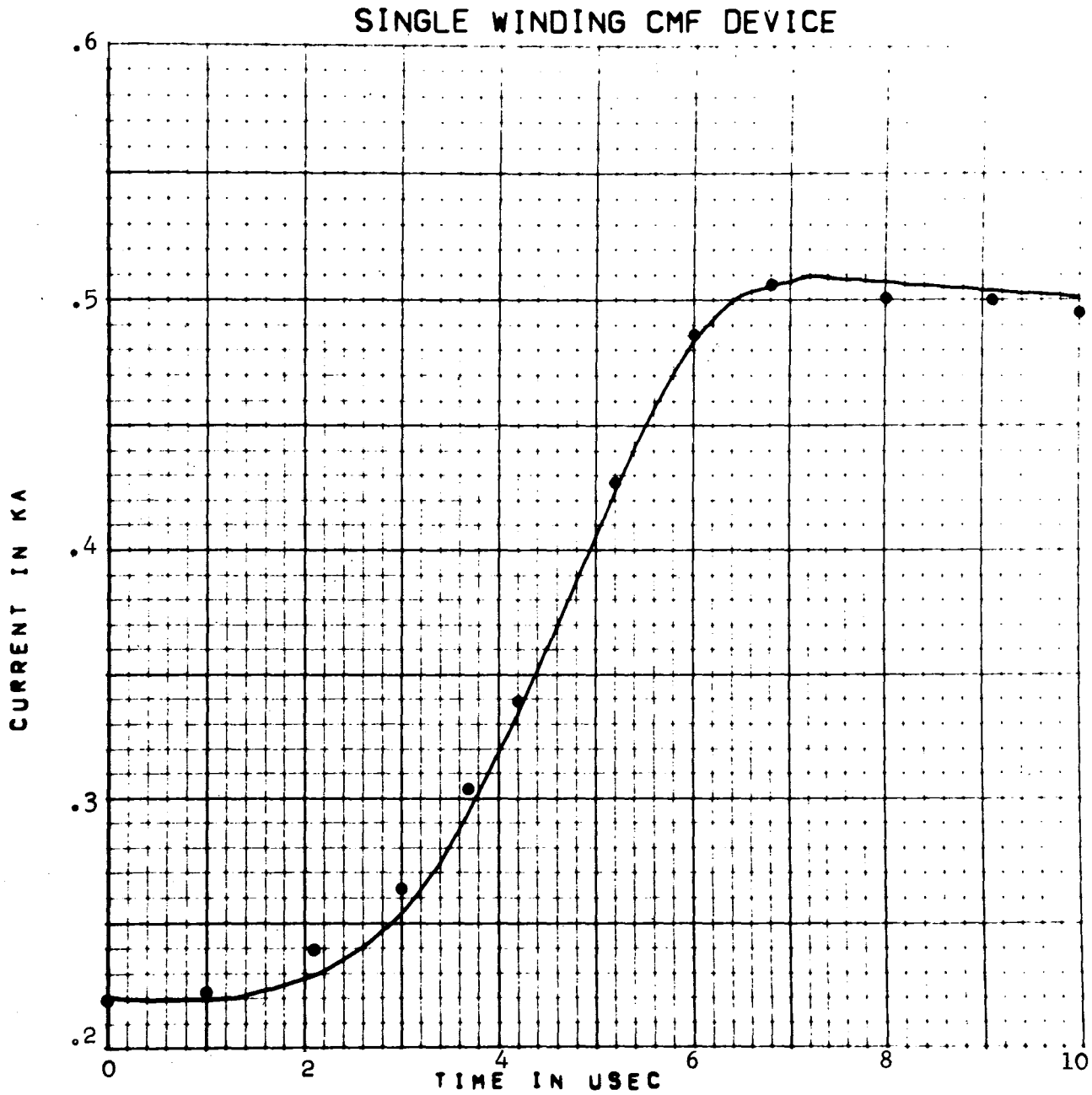

Figure 6A. Current vs Time as Predicted by Code SWL. Code Output Shown as Solid Line; Experimental Results Shown as ●.

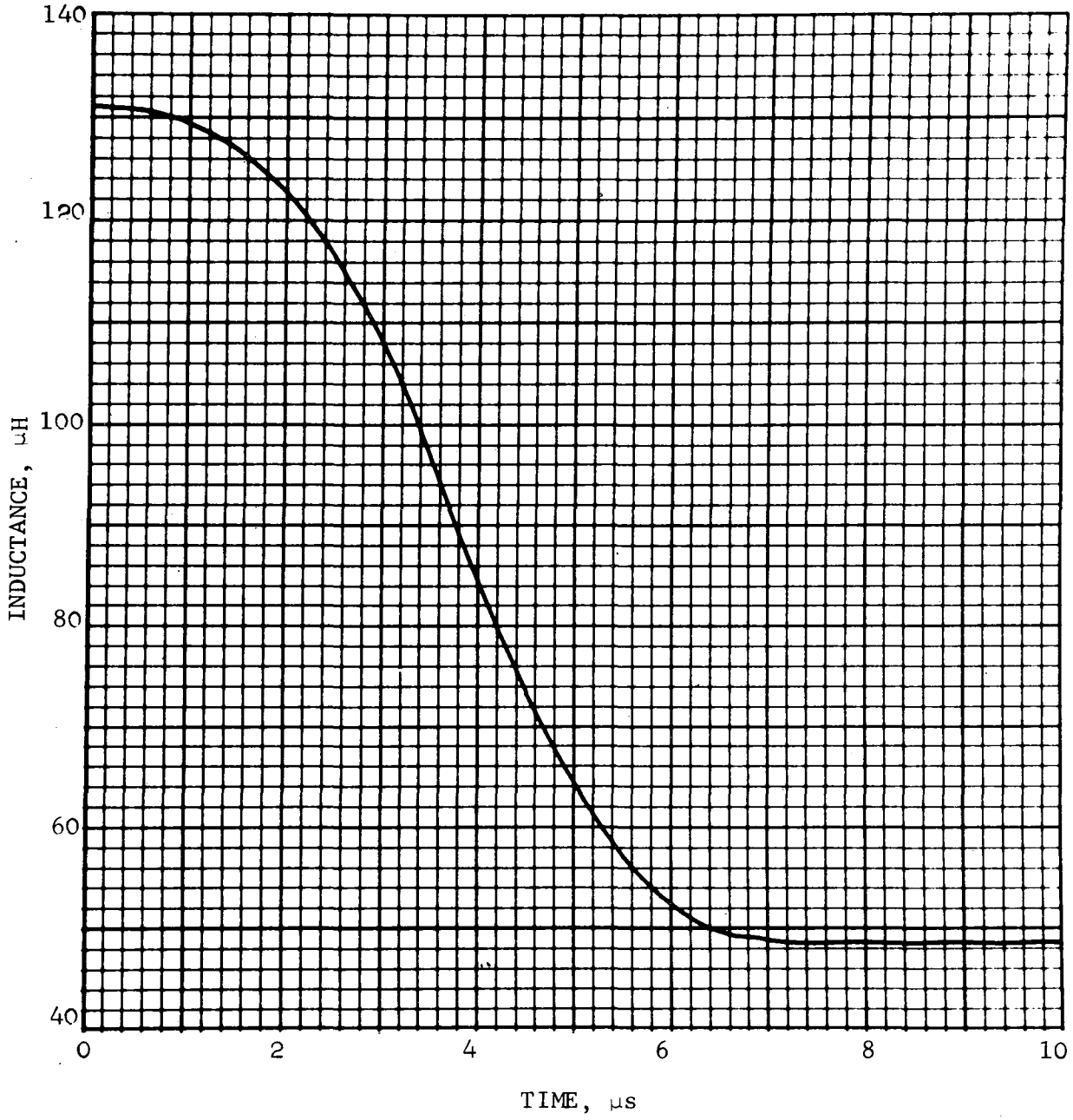

Figure 6B. Inductance vs Time as Predicted by Code SWL.

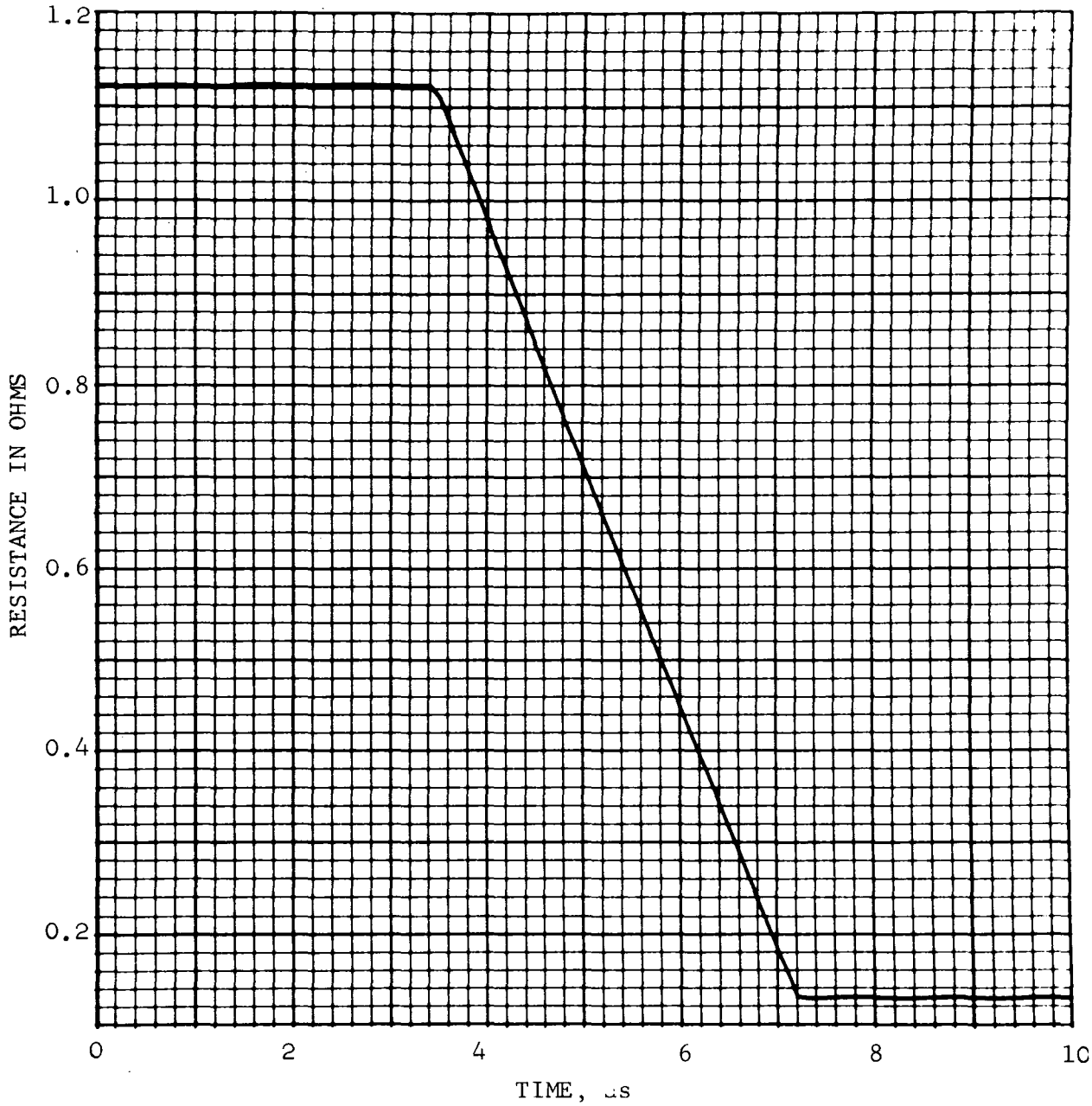

Figure 6C. Resistance vs Time as Predicted by Code SWL.

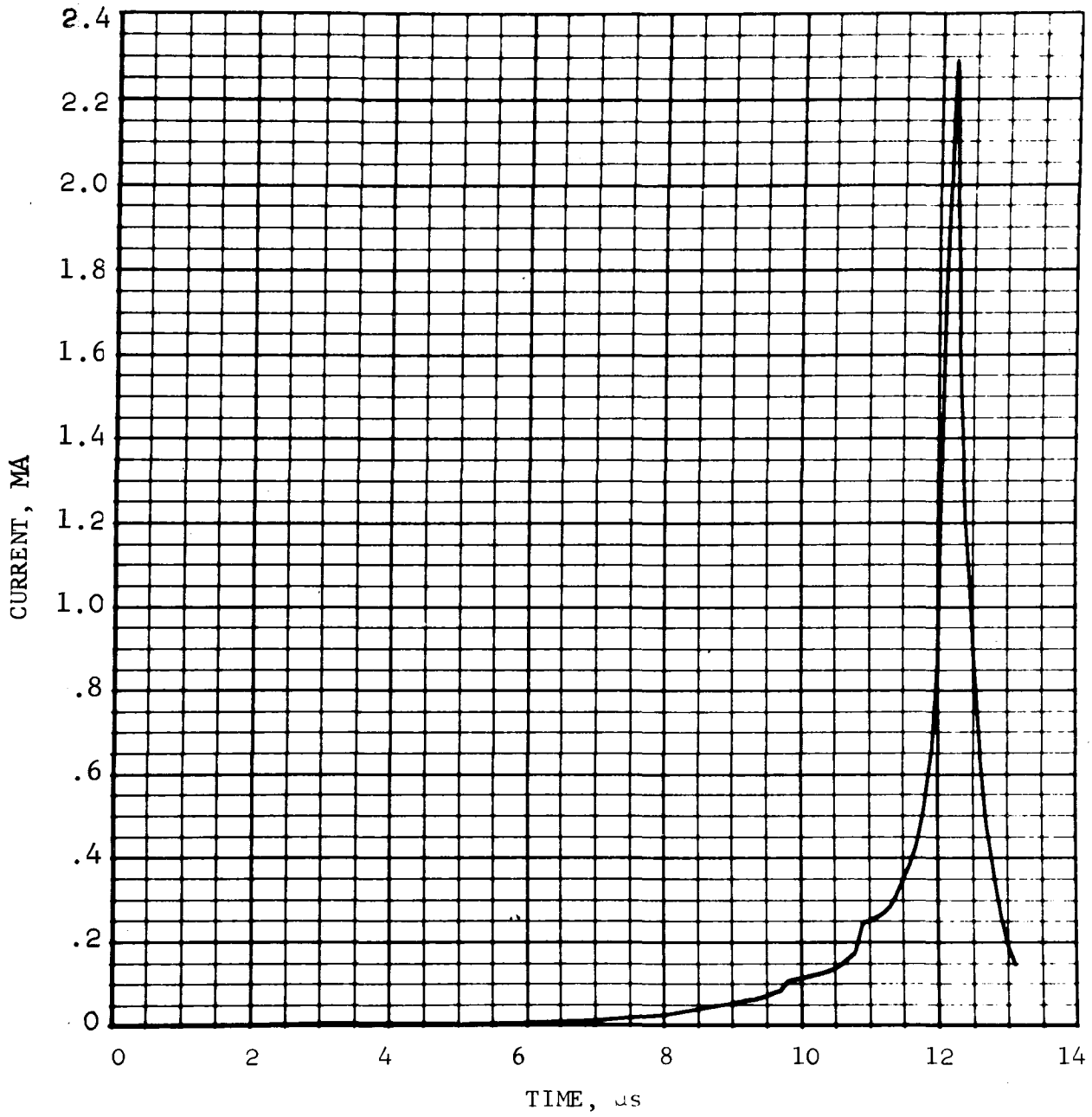

Figure 7A. Current vs Time as Predicted by Code BWL.

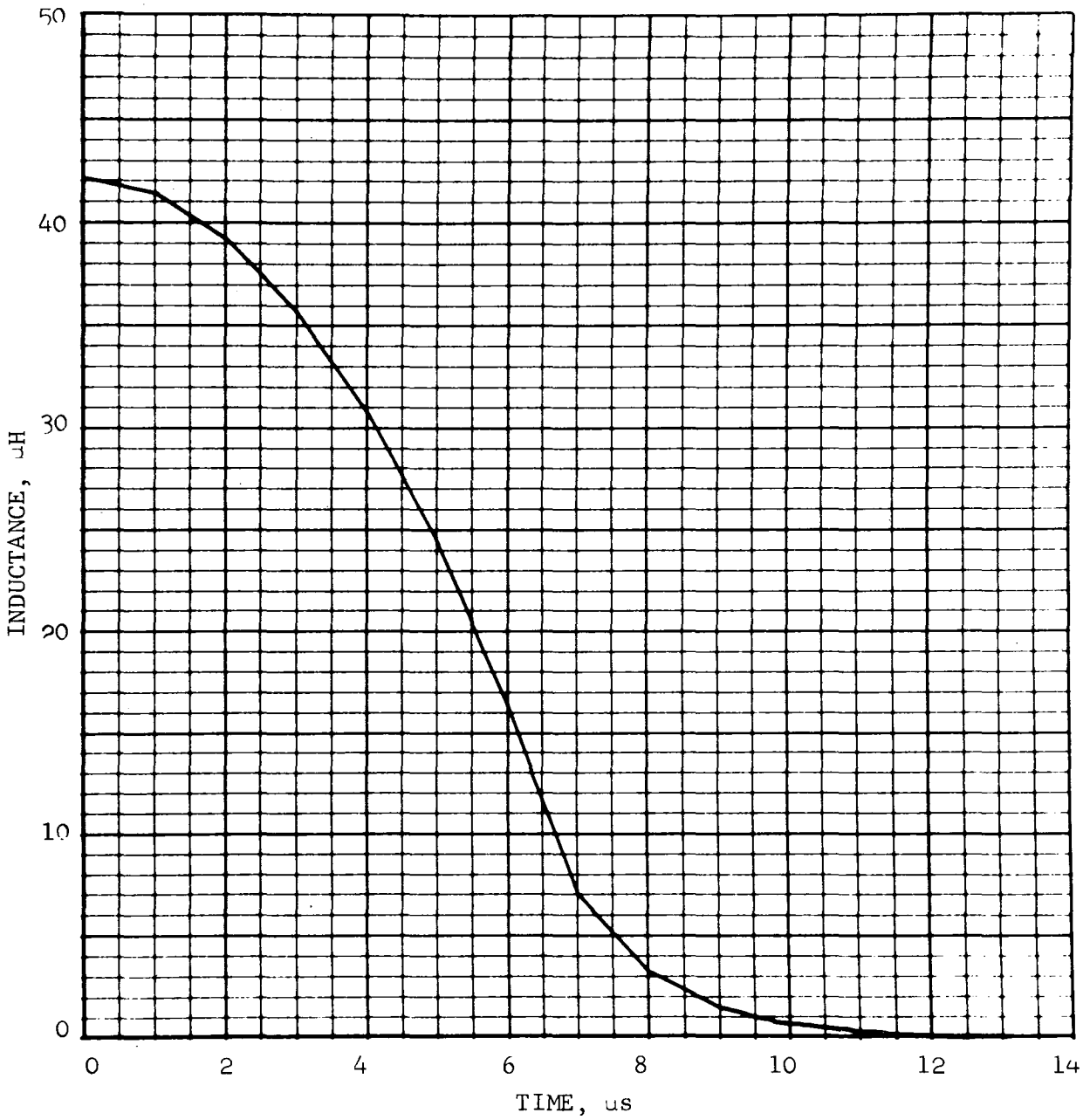

Figure 7B. Inductance vs Time as Predicted by Code BWL.

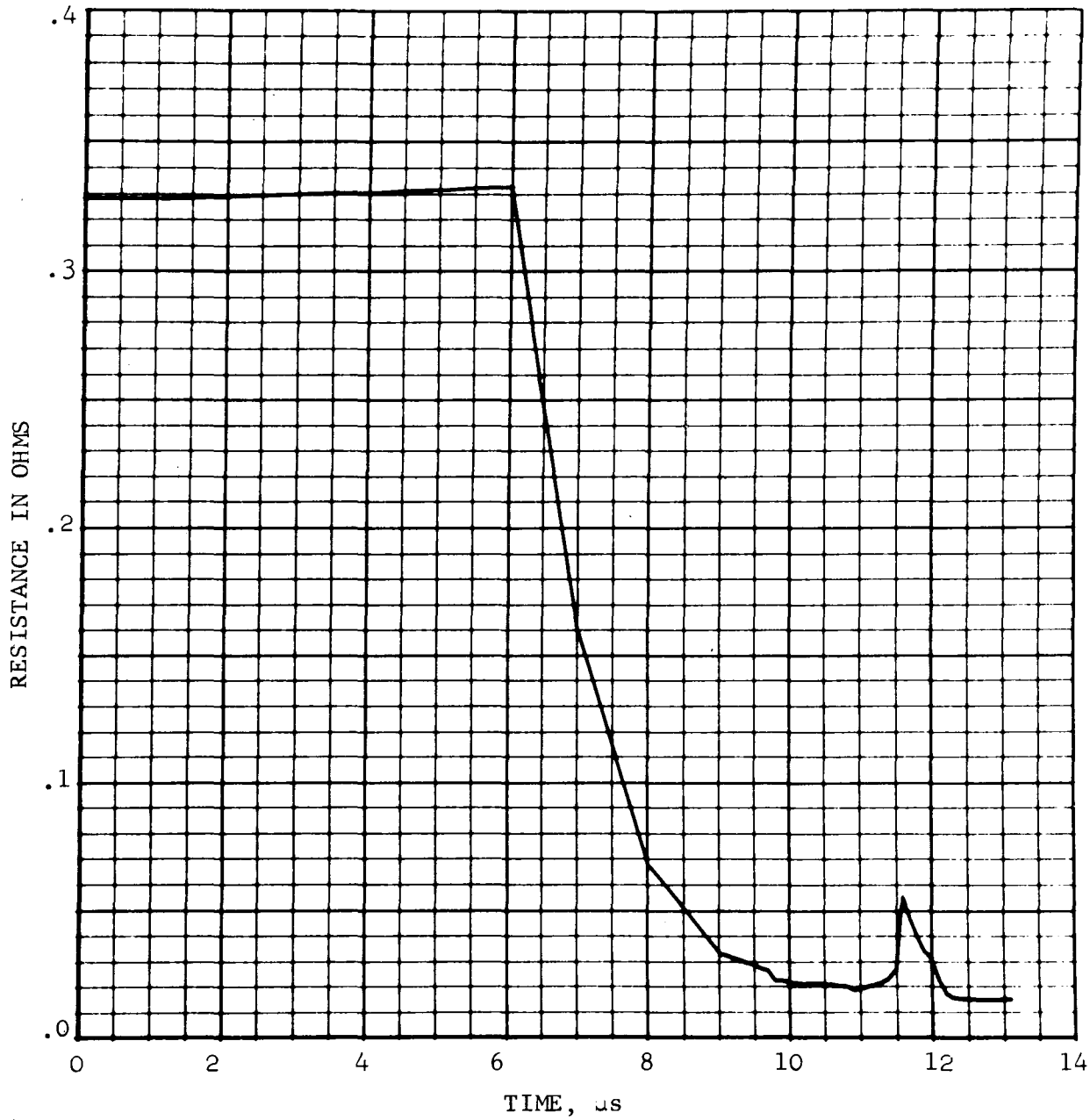

Figure 7C. Resistance vs Time as Predicted by Code BWL.

This Page Intentionally Left Blank

VI. SUMMARY

In this report we have described the analysis of compressed magnetic field current generators utilizing a newly developed finite element representation of great generality. For simplicity of numerical evaluation, this model was included in two computer codes -- SWL describing simple single winding devices, and BWL, describing branched coil CMF devices. Output results from these codes have been compared to those obtained experimentally and found to be in good agreement through most of the range of device operation; experimentally measured maximum currents were, however, below those predicted. It was concluded that the failure of actual CMF generators to achieve their predicted current gains was due either to internal voltage breakdown or to large losses from flux diffusion. Although the importance of each of these loss mechanisms has not yet been precisely determined, the new computer models, by providing estimates of previously unobtainable internal-parameter values, offer the possibility of better understanding these important effects. It is to be hoped, of course, that this new insight could lead to significant improvements in future CMF devices. Finally, the new computer models provide a quick and relatively low cost method of studying the effects of many parameters on the behavior of CMF devices and thus greatly simplify the problem of system optimization.

References

1. Crawford, J. C. and Damerow, R. A., "Explosively Driven High-Energy Generators," J. Appl. Phys. 39, 5224 (1968).
2. Shearer, J. W., et al., "Explosive-Driven Magnetic-Field Compression Generators," J. Appl. Phys. 39, 2102 (1968).
3. Rosa, E. B. and Grover, F. W., "Formulas and Tables for the Calculation of Mutual and Self-Inductance," Scientific Papers of the Bureau of Standards, No. 169, 1916.
4. Tucker, T. J. and Toth, R. P., EBW1: A Computer Code for the Prediction of the Behavior of Electrical Circuits Containing Exploding Wire Elements, Sandia Laboratories Report No. SAND-75-0041, April 1975.
5. Tucker, T. J. and Toth, R. P., The Electrical Behavior of Small Exploding Foil Flyer Assemblies, Sandia Laboratories Report No. SAND-75-0445, September 1975.

APPENDICES

This Page Intentionally Left Blank

Appendix 1

Computer Code SWL Listing

This Page Intentionally Left Blank

```
              PROGRAM SML(INPUT,OUTPUT,TAPE60 =INPUT,TAPE9)
C             FINITE ELEMENT MODEL OF SINGLE WINDING CMF DEVICE AS DESCRIBED IN
C             SANDIA REPORT SAND-75-0604 TJ TUCKER,JE LEEMAN,DEC 1975
C             FIVE INPUT CARDS REQUIRED
C             CARD 1  7F10. FORMAT
C               COLUMNS  1-10 TOTAL COIL TURNS
C                       11-20 COIL WIRE DIAMETER(COPPER) ------------------ MILS
C                       21-30 COIL TURNS/INCH
C                       31-40 COIL INSIDE DIAMETER ---------------------- INCHES
C                       41-50 ARMATURE OUTSIDE DIAMETER(INPUT END) ------ INCHES
C                       51-60 EXPLOSIVE AXIAL VELOCITY ---------------- MM/USEC
C                       61-70 ARMATURE RADIAL VELOCITY ---------------- MM/USEC
C             CARD 2  6F10. FORMAT
C               COLUMNS  1-10 TOTAL RUN TIME ------------------------------ USEC
C                       11-20 TIME INCREMENT ------------------------------ USEC
C                       21-30 LOAD INDUCTANCE ------------------------------- UH
C                       31-40 LOAD RESISTANCE ------------------------------ OHMS
C                       41-50 INJECTION CURRENT ---------------------------- AMPS
C                       51-60 DIFFUSION LOSS MULTIPLIER (*TOTAL R)
C             CARD 3  1A10,3F10. FORMAT     USE BLANK FIELD AS DEFAULT
C               COLUMNS  1-10 NON-BLANK-OUTPUTS INDIVIDUAL TURN VOLTS
C                       11-20 AXIAL DISTANCE TO TAPER ------------------- INCHES
C                       21-30 ARMATURE TAPER ANGLE -------------------- DEGREES
C                       31-40 ARMATURE OD AT START OF TAPER------------- INCHES
C             CARD 4  3F10. FORMAT    USE BLANK FIELD FOR NO FOIL
C               COLUMNS  1-10 ALUMINUM EXPLODING FOIL THICKNESS---------- INCHES
C                       11-20 ALUMINUM EXPLODING FOIL WIDTH ------------- INCHES
C                       21-30 ALUMINUM EXPLODING FOIL LENGTH ------------ INCHES
C             CARD 5  8F10. FORMAT   BLANK DEFAULT--PLOTS SELF SCALED
C               COLUMNS  1-10 SET PLOT 1 X AXIS TO VALUE SPECIFIED
C                       11-20 SET PLOT 1 Y AXIS TO VALUE SPECIFIED
C                       21-30 SET PLOT 2 X AXIS TO VALUE SPECIFIED
C                       31-40 SET PLOT 2 Y AXIS TO VALUE SPECIFIED
C                       41-50 SET PLOT 3 X AXIS TO VALUE SPECIFIED
C                       51-60 SET PLOT 3 Y AXIS TO VALUE SPECIFIED
C                       61-70 SET PLOT 4 X AXIS TO VALUE SPECIFIED
C                       71-80 SET PLOT 4 Y AXIS TO VALUE SPECIFIED
000002        DIMENSION VPT(200)
000002        DIMENSION VLLAST(200)
000002        DIMENSION PT(200),PC(200),PR(200),PL(200),PV(200)
000002        COMMON N,WD,A,B00,VX,VY,D(200),B(200),IFLAG
000002        COMMON SUMG,TAPD,ANGLE,B0(200),B1,TE(200),DBT
000002        COMMON VL(200)
000002        COMMON TSM
000002        READ 61,HN,WD,TPI,A,B00,VX,VY
000024        READ 61,TTOT,DT,EXL,EXR,C0,RFACT
000044        READ 62,KFLAG,   TAPD,ANGLE,B1
000060        READ 61,THICK,WIDTH,WLEN
000072        NX1=NX2=NX3=NX4=1
000076        NY1=NY2=NY3=NY4=1
000102        READ 61 ,XU1,YU1,XU2,YU2,XU3,YU3,XU4,YU4
000126        IF(XU1.NE.0)NX1=2
000130        IF(XU2.NE.0)NX2=2
000132        IF(XU3.NE.0)NX3=2
000134        IF(XU4.NE.0)NX4=2
000136        IF(YU1.NE.0)NY1=2
000140        IF(YU2.NE.0)NY2=2
000142        IF(YU3.NE.0)NY3=2
```

```
000144          IF(YU4.NE.0)NY4=2
000146          NPP=0
000147          RFOIL=0.
000150       62 FORMAT(1A10,3F10.0)
000150       61 FORMAT(8F10.5)
000150          DBT=2.54/TPI
000151            TTOT=TTOT*1.E-6
000153            DT=DT*1.E-6
000154            EXL=EXL*1.E-6
000155            JT=0
000156            N=HN
000157          HINT=0.
000160            HLAST=0.
000161            CLAST=C0
000162            TLAST=0.
000163            C2LAST=0.
000163            SUMG=0.
000164            DO 500 I=1,N
000166            YI=I
000167            D(I)=(YI-1.)*DBT
000172     400    FORMAT(4E15.8)
000172     500    CONTINUE
000174            NPT=TTOT/DT
000177          PRINT 37
000202       37 FORMAT(1H1)
000202          PRINT 31,C0,A,HN,EXL,VX,TTOT
000222       31 FORMAT(1X,*INJ CUR*,F8.1,4X,*COIL ID *,F8.4,4X,*NO TURNS*F8.0,4X,
             1*LOAD L*,6PF8.4,6X,*AXIAL VEL *, 0PF8.4,4X,*RUN TIME*6PF8.3)
000222          PRINT 32,TPI,B00,WD,EXR,VY,DT
000242       32 FORMAT(1X,*TPI*,F8.2,9X,*ARM OD *,F8.4,4X,*WIRE DIA*F8.4,4X,
             C*LOAD R*,F8.4,
             16X,*RADIAL VEL*, 0PF8.4,4X,*T INC*6PF8.4)
000242          PRINT 38,TAPD,ANGLE,RFACT
000254       38 FORMAT(1X,*START TAPER*F8.4,2X*ANGLE*F8.4,2X,
             1*FLUX LOSS MULT*F8.4,2X/)
000254          PRINT 34
000260       34 FORMAT(6X,*TIME*,8X,*CURRENT*,5X,*INDUCTANCE*,5X,*RESISTANCE*,
             19X,*OUTPUT*,9X,*ACTION*,10X,*ATTEN*,5X,*TURNS*)
000260          PRINT 35
000264     35     FORMAT(6X,*USEC*,11X,*AMPS*,9X,*UHENRY*11X,*OHM *,10X,*VOLTS*,
             19X,*A2-SEC*/)
000264            T=0.
000265          A=(A+WD/1000.)*2.54/2.
000270          B00=(B00-WD/1000.)*2.54/2.
000273          B0=(B0-WD/1000.)*2.54/2.
000276          VY=VY*1.E+5
000300          VX=VX*1.E+5
000301          TAPD=TAPD*2.54
000302          WD=WD*2.54/1000.
000304          ANGLE=ANGLE/57.296
000306          IF(WIDTH.EQ.0.)GO TO 53
000307          IF(T.EQ.0.)RFOIL=8.4E-6*WLEN*2.54/(THICK*WIDTH*2.54**2)
000316     53     CONTINUE
000316            CALL SR1(T,CL)
000320            CALL SR2(T,R)
000322          JTR=N-IFLAG
000324            SL=CL+EXL
000326            SR=R+EXR
```

```
000330          SR=SR+RFOIL
000331            IF(T.EQ.0.)CL0=SL
000334          H=(SR+SR*RFACT)/SL
000337            DELH=(H+HLAST)/2.*(T-TLAST)
000343          HINT=HINT+DELH
000345            ATT=EXP(-HINT)
000350          C=CL0/SL*C0*ATT
000354          CALL        FOIL(SUMG,RFOIL,WLEN,WIDTH,THICK,T,C,TTOT)
000363          IF(T.GT.TTOT)GO TO 20
000367          NPP=NPP+1
000370          PL(NPP)=SL*1.E+6
000373          PR(NPP)=SR
000374          PC(NPP)=C*1.E-3
000376          PT(NPP)=T*1.E+6
000400            NTOUT=N-IFLAG
000402     25     FORMAT( 6PF10.4,0PF15.0,6PF15.4,0PF15.4,F15.1,E15.4,F15.5,I10)
000402            C2=C**2
000403            G=(C2+C2LAST)/2.*(T-TLAST)
000410            SUMG=SUMG+G
000411          IF(T.EQ.0.)CLOST=CL
000416          VOLT=C*(EXR-EXL*SR/SL-EXL/SL*(CL-CLOST)/DT)
000426          CLOST=CL
000427          PV(NPP)=VOLT*1.E-3
000432          XTR=JTR
000433          IF(JTR.EQ.0)GO TO 91
000434          VGRD=VOLT/XTR/DBT
000436       91 IF(JTR.EQ.0)VGR=0.
000440          PRINT 25,T,C,SL,SR,VOLT,SUMG,ATT,JTR
000464          IF(IFLAG.GE.1)IFI=IFLAG
000470          IF(IFLAG.LT.1)IFI=1
000473          SUMVP=0.
000474          DO 40 I=IFI,N
000476          IF(T.EQ.0.)VLLAST(I)=VL(I)
000501          IF(JTR.GT.0)RTT=R/XTR
000505          IF(JTR.EQ.0)RTT=0.
000507          VPT(I)=(VL(I)*C-VLLAST(I)*CLAST)/DT+C*RTT
000516          IF(I.EQ.IFI)GO TO 473
000520          SUMVP=SUMVP+VPT(I)
000522      473 CONTINUE
000522          VLLAST(I)=VL(I)
000524       40 CONTINUE
000527       82 CONTINUE
000527          IF0=IFI+1
000531          IF(KFLAG.NE.10H          )PRINT 46,(VPT(I),I=IF0,N)
000543       46 FORMAT(10F12.1)
000543          SUMVP=-(SUMVP+VOLT)
000545          IF(KFLAG.NE.10H          )PRINT 46,SUMVP
000555       45 CONTINUE
000555            TLAST=T
000556            HLAST=H
000560            C2LAST=C2
000561            IF(C/CLAST.GE.1.2)JT=JT+1
000567            CLAST=C
000570                    T=T+DT
000572            IF(T.LT.TTOT+DT)GO TO 53
000575     20     CONTINUE
000575          CALL ENTFLM(9)
000577          CALL HDCOPY(9)
```

```
000601          CALL AICRT3(0,0,PT,PC,NPP,1,2,1,48,48H                          LOBO
               1                    ,48H                    TIME IN USEC
               2       ,48H                  CURRENT IN KA                   , 1,1,16
               3.,16.,NX1,0.,XU1,NY1,0.,YU1)
000627          CALL AICRT3(0,0,PT,PL,NPP,1,2,1,48,48H                          LOBO
               1                    ,48H                    TIME IN USEC
               2       ,48H                INDUCTANCE IN UHEN                  , 1,1,16
               3.,16.,NX3,0.,XU3,NY3,0.,YU3)
000655          CALL AICRT3(0,0,PT,PR,NPP,1,2,1,48,48H                          LOBO
               1                    ,48H                    TIME IN USEC
               2       ,48H                RESISTANCE IN OHMS                  , 1,1,16
               3.,16.,NX2,0.,XU2,NY2,0.,YU2)
000703          CALL AICRT3(0,0,PT,PV,NPP,1,2,1,48,48H                          LOBO
               1                    ,48H                    TIME IN USEC
               2       ,48H                VOLTAGE IN KV                       , 1,1,16
               3.,16.,NX4,0.,XU4,NY4,0.,YU4)
000731          CALL EXTFLM(0)
000733            END


PROGRAM LENGTH INCLUDING I/O BUFFERS
012252

FUNCTION ASSIGNMENTS

STATEMENT ASSIGNMENTS
20      -  000576    25      -  001074    31      -  000764    32      -  001002
34      -  001036    35      -  001052    37      -  000762    38      -  001024
45      -  000556    46      -  001107    53      -  000317    61      -  000752
62      -  000747    82      -  000530    91      -  000437    400     -  000757
473     -  000523

BLOCK NAMES AND LENGTHS
        -  001765

VARIABLE ASSIGNMENTS
A       -  000002C01 ANGLE   -  000631C01 ATT     -  004146    B       -  000316C01
B0      -  000632C01 B00     -  000003C01 B1      -  001142C01 C       -  004147
CL      -  004136    CLAST   -  004127    CLOST   -  004153    CL0     -  004143
C0      -  004074    C2      -  004151    C2LAST  -  004131    D       -  000006C01
DBT     -  001453C01 DELH    -  004145    DT      -  004071    EXL     -  004072
EXR     -  004073    G       -  004152    H       -  004144    HINT    -  004125
HLAST   -  004126    HN      -  004066    I       -  004132    IFI     -  004160
IFLAG   -  000626C01 IFO     -  004163    JT      -  004124    JTR     -  004140
KFLAG   -  004076    N       -  000000C01 NPP     -  004122    NPT     -  004134
NTOUT   -  004150    NX1     -  004102    NX2     -  004103    NX3     -  004104
NX4     -  004105    NY1     -  004106    NY2     -  004107    NY3     -  004110
NY4     -  004111    PC      -  002426    PL      -  003246    PR      -  002736
PT      -  002116    PV      -  003556    R       -  004137    RFACT   -  004075
RFOIL   -  004123    RTT     -  004162    SL      -  004141    SR      -  004142
SUMG    -  000627C01 SUMVP   -  004161    T       -  004135    TAPO    -  000630C01
TE      -  001143C01 THICK   -  004077    TLAST   -  004130    TPI     -  004067
TTOT    -  004070    VGR     -  004157    VGRO    -  004156    VL      -  001454C01
VLLAST  -  001606    VOLT    -  004154    VPT     -  001276    VX      -  000004C01
VY      -  000005C01 WO      -  000001C01 WIDTH   -  004100    WLEN    -  004101
XTR     -  004155    XU1     -  004112    XU2     -  004114    XU3     -  004116
XU4     -  004120    YI      -  004133    YU1     -  004113    YU2     -  004115
```

```
                SUBROUTINE SR1(T,TLM)
000004          DIMENSION CMT(200),AMT(200),TO(200)
000004        DIMENSION SFL(200)
000004        COMMON N,WD,A,B00,VX,VY,D(200),B(200),IFLAG
000004        COMMON SUMG,TAPD,ANGLE,B0(200),B1,TE(200),DBT
000004        COMMON VL(200)
000004        COMMON TSM
000004          F0(X,C0)=X+C0**2/4.*(X-1.)+C0**4/64.*9.*(X-7./6.)+C0**6
            C   /256.*25.*(X-111./90.)+C0**8/16384.*1225.*(X-1.25)
000036          E0(X,C0)=1.+C0**2/2.*(X-.5)+C0**4/16.*3.*(X-13./12.)
            C   +C0**6/128.*15.*(X-1.2)+C0**8/2048.*175.*(X-1.25)
000070        NN=N+1
000072   400    FORMAT(4E15.8)
000072        IFLAG=0
000073        DO 5 I=1,NN
000074        IF(T.NE.0)GO TO 84
000077        D(N+1)=2.*D(N)-D(N-1)
000102        TO(I)=(D(I)-D(1))/VX
000105        IF(D(I).LE.TAPD)AG=0.
000111        IF(D(I).GT.TAPD)AG=ANGLE
000115        YARM=(D(I)-TAPD)*SIN (AG)/COS (AG)
000125        B0(I)=B00+YARM
000130        IF(B0(I).LE.B1)B0(I)=B1
000136        TE(I)=TO(I)+(A-WD-B0(I))/VY
000144     84 CONTINUE
000144        IF(T.GE.TO(I))B(I)=VY*(T-TO(I))+B0(I)
000153        IF(T.LT.TO(I))B(I)=B0(I)
000160        IF(B(I).GE.A-WD)IFLAG=I
000166        IF(IFLAG.EQ.0)TD=(A-WD-B00)/VY
000173   401    FORMAT(4E15.8)
000173   5      CONTINUE
000176        IF(IFLAG.GT.N)IFLAG=N
000201          IF(IFLAG.EQ.0)TD=(A-WD-B00)/VY
000206          IF(IFLAG.GT.0)TD=TO(IFLAG)+(A-WD-B0(IFLAG))/VY
000215        IF(IFLAG.GT.0)TD=TO(IFLAG)+(A-WD-B0(IFLAG))/VY
000224          TPP=(D(IFLAG+1)-D(IFLAG))/VX
000227        IF(IFLAG.GT.0)TSM=1.-(T-TD)/TPP
000234          IF(TSM.LE.0.)TSM=0.
000237          RFLAG=N-IFLAG
000241        SUML=0.
000242        IFF=1
000243        IF(IFLAG.GT.0)IFF=IFLAG
000245        DO 33 I=IFF,N
000247        SFL(I)=4.*3.14159*A*(ALOG(8.*A/WD)-1.75)*1.E-9
000260        IF(IFLAG.GT.0)SFL(IFLAG)=TSM*SFL(IFLAG)
000265        SUML=SUML+SFL(I)
000270     33 CONTINUE
000272          IFF=IFLAG
000272          IF(IFLAG.EQ.0)IFF=1
000274          DO 600 I=IFF,N
000276          SXMC=0.
000277          DO 605 J=IFF,N
000301          IF(I.EQ.J)XMC=0.
000304          IF(I.EQ.J)GO TO 605
000305          DD=D(J)-D(I)
000307          C1=2.*A/SQRT(4.*A**2+DD**2)
000316          C0=(1.-C1)/(1.+C1)
000321          X=ALOG(4./C0)
```

```
000325              FOC=FO(X,CO)
000331              EOC=EO(X,CO)
000333              XMC=4.*3.14159*A*(FOC/C1/(C1+1.)-EOC*(C1+1.)/C1)*1.E-9
000343              IF(I.EQ.IFLAG.OR.J.EQ.IFLAG)XMC=XMC*TSM
000353              SXMC=SXMC+XMC
000355      605     CONTINUE
000360              CMT(I)=SXMC
000362      600     CONTINUE
000364      700     CONTINUE
000364              IFF=IFLAG
000365              IF(IFLAG.EQ.0)IFF=1
000367              TOTM=0.
000370              DO 620 I=IFF,N
000372              IF(IFF.GT.N)GO TO 620
000375              SXMA=0.
000375              DO 630 J=IFF,N
000377              DD=D(J)-D(I)
000401              C1=2.*SQRT(A*B(J))/SQRT((A+B(J))**2+DD**2)
000416              CO=(1.-C1)/(1.+C1)
000421              X=ALOG(4./CO)
000425              FOA=FO(X,CO)
000431              EOA=EO(X,CO)
000433              XMA=4.*3.14159*SQRT(A+B(J))*(FOA/C1/(C1+1.)-EOA*(C1+1.)
            C       /C1)*1.E-9
000450            XMA=XMA*B(J)/(A-WD)
000454              IF(I.EQ.IFLAG.OR.J.EQ.IFLAG)XMA=XMA*TSM
000466              SXMA=SXMA+XMA
000470      630     CONTINUE
000473              AMT(I)=SXMA
000474              TOTM=CMT(I)-AMT(I)+TOTM
000477            IF(TOTM.LE.0.)TOTM=0.
000501      666     FORMAT( 3E15.8)
000501      620     CONTINUE
000504              TLM=TOTM+SUML
000506            DO 34 I=IFF,N
000514            VL(I)=(SFL(I)+CMT(I)-AMT(I))
000516            IF(VL(I).LE.0.)VL(I)=0.
000521         34 CONTINUE
000522              RETURN
000523              END
```

```
SUBPROGRAM LENGTH
002363

FUNCTION ASSIGNMENTS
EO      -  000042     FO      -  000010

STATEMENT ASSIGNMENTS
5       -  000174     34      -  000522     84      -  000145     400     -  000567
401     -  000572     605     -  000356     620     -  000502     666     -  000604
700     -  000365

BLOCK NAMES AND LENGTHS
        -  001765

VARIABLE ASSIGNMENTS
```

```
                SUBROUTINE SR2(T,R)
000004          DIMENSION RHOA(100),SGA(100)
000004          DATA (RHOA(I),I=1,96)/1.864,1.883,2.047,2.559,2.758,3.399,
              C 3.590,4.217,4.637,4.641,5.267,6.105,
              C 6.669,7.374,8.798,9.218,9.920,10.622,
              C 11.466,12.313,13.951,15.440,17.136,18.129,
              C 18.912,19.28,20.08,20.60,21.10,21.97,23.19,24.20,25.24,
              C 26.37,27.86,29.39,30.36,32.39,33.99,35.53,37.21,39.11,
              C 41.1,42.80,44.41,47.96,52.48,52.50,53.61,57.05,60.39,
              C 64.16,67.66,67.51,70.56,74.60,79.17,85.42,91.73,101.,
              C 116.,134.,164.,187.,195.,256.,348.,423.,500.,580.,620.,
              C 540.,493.,449.,386.,315.,255.,220.,194.,178.,162.,147.,
              C 135.,124.,117.,110.,106.,104.,98.9,92.8,86.8,79.9,72.4,
              C 63.8,56.,49./
000004          DATA (SGA(I),I=1,96)/0.,293.2,2784.7,10589.,13617.,
              C 23364.,26276.,33930.,39909.,43986.,47407.,53296.,61347.,
              C 65273.,73027.,76744.,80401.,83011.,84924.,87296.,89258.,
              C 91157.,92363.,93282.,94256.,95802.,98487.,102360.,104410.,
              C 107870.,112470.,116370.,119930.,124210.,127990.,131760.,
              C 135520.,138710.,141000.,143450.,145560.,147500.,149710.,
              C 151260.,152250.,152910.,153570.,154930.,156020.,157260.,
              C 158020.,158670.,159200.,160430.,161550.,162880.,164040.,
              C 165310.,166250.,166820.,167450.,168170.,168580.,168930.,
              C 168940.,169540.,170600.,170800.,171800.,172600.,173000.,
              C 174200.,174690.,175300.,176050.,176950.,177620.,178140.,
              C 178680.,179200.,179910.,180960.,182020.,183680.,185280.,
              C 187240.,188830.,189970.,191020.,192530.,194560.,198130.,
              C 202870.,209270.,215820.,223550./
000004          COMMON N,WD,A,B00,VX,VY,D(200),B(200),IFLAG
000004          COMMON SUMG,TAPD,ANGLE,B0(200),B1,TE(200),DBT
000004          COMMON VL(200)
000004            XN=N
000005            WA=3.14159/4.*WD**2
000007          AFLAG=N-IFLAG
000011          HN=N
000012          EFL=SQRT((2.*3.14159*A)**2+DBT**2)
000017          WL=HN*EFL
000021          IF(IFLAG.EQ.0)GO TO 28
000023          WLT=                    EFL*(1.-(T-TE(IFLAG))/(TE(IFLAG+1)
               1-TE(IFLAG)))
000031          IF(WLT.LE.0)WLT=0.
000033          WL=AFLAG*EFL+WLT
000036       28 IF(T.NE.0.)GO TO 13
000037            DO 12 I=1,96
000041     44     FORMAT(4E15.8)
000041     12     RHOA(I)=RHOA(I)*1.E-6
000045     13     CONTINUE
000045            SG=SUMG/(100.*WA)**2
000050            DO 17 I=2,96
000052            IF(SGA(I).LT.SG)GO TO 17
000055            GO TO 18
000055     17     CONTINUE
000060     18     RHO=RHOA(I-1)+(RHOA(I)-RHOA(I-1))*(SG-SGA(I-1))/
              C   (SGA(I)-SGA(I-1))
000066            R=RHO*WL/WA
000070            RETURN
000071            END
        C
```

```
                SUBROUTINE FOIL(SUMG,RFOIL,WLEN,WIDTH,THICK,T,C,TTOT)
000012          DIMENSION       TA(300),EA(300),GA(300),CA(300),VA(300),RA(300),
               1PA(300),SE(300),SGQ(300)
000012          DIMENSION RHOA(60),SGA(60)
000012          DATA (RHOA(I),I=1,55)/8.4,8.65,8.9,9.5,10.1,10.7,11.3,11.9,12.5,
               113.27,14.02,14.53,15.05,21.94,30.4,38.36,47.38,55.35,62.26,
               269.71,76.63,85.41,96.38,105.8,112.5,122.7,139.7,164.9,200.2,
               3253.,306.4,351.1,375.2,388.5,396.7,396.3,389.4,376.2,361.7,
               4340.,317.2,300.5,283.,264.6,248.3,235.6,222.,201.5,201.4,
               5192.4,184.3,178.1,172.4,166.7,163.9/
000012          DATA (SGA(I),I=1,55)/0.,703.32,1538.7,2736.3,4118.4,5602.6,
               17022.4,8471.1,10004.,11493.,13120.,14693.,16335.,25103.,32721.,
               238572.,45142.,50558.,54685.,59006.,62166.,64811.,66615.,68096.,
               369576.,70796.,71821.,72588.,73673.,75261.,76020.,77027.,77842.,
               478280.,79464.,82617.,84030.,85626.,87960.,91287.,94814.,98047.,
               5102040.,106040.,110620.,114520.,118810.,123600.,128150.,
               6133960.,140290.,146870.,154280.,160930.,167020./
000012          WA=THICK*WIDTH*2.54**2
000014          IF(WA.GT.0.)GO TO 9
000016          RFOIL=0.
000016          GO TO 17
000017        9 CONTINUE
000017          WL=WLEN*2.54
000020          FACT=4.5726E+12
000022          IF(T    .NE.0.)GO TO 8
000023          DO 12 I=1,55
000027       12 RHOA(I)=RHOA(I)*1.E-6
000034        8 CONTINUE
000034          SG=SUMG/(100.*WA)**2
000037          DO 25 J=2,55
000040          IF(SGA(J).LT.SG) GO TO 25
000043          RHO=RHOA(J-1)+(RHOA(J)-RHOA(J-1))*(SG-SGA(J-1))/(SGA(J)-SGA(J-1))
000053          GO TO 30
000053       25 CONTINUE
000055          RHO=FACT/SG**2*1.E-6
000060       30 CONTINUE
000060          RFOIL=RHO*WL/WA
000063          SR1=RFOIL
000063          WDEN=2.699
000065          WAC=WA*100.
000066          WLC=WL*10.
000070          IF(T.EQ.0)JJ=0
000072          IF(T.EQ.0)TLAST=0.
000074          IF(T.EQ.0)CLAST=C
000077          IF(T.EQ.0.)RLAST=SR1
000105          E=E+(T-TLAST)/2.*(C**2*SR1+CLAST**2*RLAST)
000113          CLAST=C
000114          TLAST=T
000115          RLAST=SR1
000117          G=SUMG
000120          JJ=JJ+1
000122          TA(JJ)=T
000122          EA(JJ)=E
000124          GA(JJ)=G
000126          CA(JJ)=C
000130          VA(JJ)=C*SR1
000132          RA(JJ)=SR1
000134          PA(JJ)=C**2*SR1
```

```
000136          SE(JJ)=E/WAC/WLC/WDEN*1000.
000144          SGO(JJ)=G/WAC**2
000150          TR2= 25238. $TR3= 32035. $TR4= 48561. $TR5= 65776. $TR6=167019.
000157          IF(T.LT.TTOT)GO TO 241
000162       37 FORMAT(1H1)
000162      255 FORMAT (1H1,10X,*TIME*,8X,*CURRENT*,10X,*VOLTS*,11X,*OHMS*,
               110X,*POWER*,9X,*ENERGY*,9X,*ACTION*,10X,*GDENS*10X*EDENS*/
               21H ,6X*MICROSEC*11X*AMPS*36X*KILOWATTS*9X*MILLIJ*7X,
               8*AMP2 SEC*,3X,*AMP2 SEC/MM4*11X*J/GM*/)
000162      245 PRINT 255
000166          DO 240 K=1,JJ
000173          IF(          K.EQ.51.OR.K.      EQ.101.OR.K.EQ.151.OR.K.EQ.201.OR.
               1K.EQ.251)PRINT 255
000225      250 IF(SGO(K).LT.TR2)KEY=3HS
000232          IF(SGO(K).GE.TR2)KEY=3HS+L
000240          IF(SGO(K).GE.TR3)KEY=3HL
000246          IF(SGO(K).GE.TR4)KEY=3HL+V
000254          IF(SGO(K).GE.TR5)KEY=3HARC
000262          IF(SGO(K).GE.TR6)KEY=3HEXT
000270          PRINT 260,KEY,TA(K),CA(K),VA(K),RA(K),PA(K),EA(K),GA(K),SGO(K),
               1SE(K)
000320      260 FORMAT(X,A3,6PF11.3,0PF15.1,F15.1,F15.5,-3PF15.3,3PF15.2,0PF15.4,
               1E15.4,F15.3)
000324      240 CONTINUE
000326      241 CONTINUE
000326       17 CONTINUE
000326          RETURN
000327          END
```

SUBPROGRAM LENGTH
006103

FUNCTION ASSIGNMENTS

STATEMENT ASSIGNMENTS

8	-	000035	9	-	000020	17	-	000327	25	-	000054
30	-	000061	37	-	000350	241	-	000327	245	-	000163
250	-	000226	255	-	000352	260	-	000420			

BLOCK NAMES AND LENGTHS

VARIABLE ASSIGNMENTS

C	-	000000	CA	-	002253	CLAST	-	006070	E	-	006072
EA	-	001123	FACT	-	006055	G	-	006073	GA	-	001577
I	-	006056	J	-	006060	JJ	-	006066	K	-	006101
KEY	-	006102	PA	-	004057	RA	-	003403	RHO	-	006061
RHOA	-	005663	RLAST	-	006071	SE	-	004533	SG	-	006057
SGA	-	005757	SGO	-	005207	SR1	-	006062	TA	-	000447
TLAST	-	006067	TR2	-	006074	TR3	-	006075	TR4	-	006076
TR5	-	006077	TR6	-	006100	TTOT	-	000001	VA	-	002727
WA	-	006053	WAC	-	006064	WDEN	-	006063	WL	-	006054
WLC	-	006065									

START OF CONSTANTS
000332

This Page Intentionally Left Blank

Appendix 2

Computer Code BWL Listing

This Page Intentionally Left Blank

```
      PROGRAM BWL(INPUT,OUTPUT,TAPE50 =INPUT,TAPE9)
C     FINITE ELEMENT MODEL OF BRANCHED WINDING CMF DEVICE AS DESCRIBED
C     SANDIA REPORT SAND-75-0604 TJ TUCKER,JE LEEMAN,DEC 1975
C     INPUT CARDS REQUIRED
C     CARD 1  4F10. FORMAT
C       COLUMNS  1-10 TOTAL NUMBER OF WINDINGS-MAXIMUM 31
C                11-20 NEGATIVE-REDUCE TIME STEP BY 10 IF CURRENT
C                      INCREMENT EXCEEDS 20 PERCENT
C                      BLANK   -NO CHANGE IN TIME STEP
C                      POSITIVE-RUN TIME IN USEC AT WHICH NEW TIME STEP
C                      SPECIFIED IN COLUMNS 21-30 WILL BE APPLIED
C                21-30 NEW TIME STEP IN USEC
C                31-40 NON-BLANK--OUTPUTS INDIVIDUAL TURN VOLTS
C     CARD SET A ========= INPUT SEQUENTIALLY IN 8F10. FORMAT THE NUMBER
C                           OF TURNS IN EACH WINDING
C     CARD SET B =======INPUT SEQUENTIALLY IN 8F10. FORMAT THE TURNS/INCH
C                        FOR EACH WINDING
C     CARD 3  7F10. FORMAT
C       COLUMNS  1-10 COIL INSIDE DIAMETER ---------------------- INCHES
C                11-20 ARMATURE OUTSIDE DIAMETER(INPUT END) ------ INCHES
C                21-30 COIL WIRE DIAMETER ------------------------ MILS
C                31-40 EXPLOSIVE AXIAL VELOCITY ================= MM/USEC
C                41-50 ARMATURE  RADIAL VELOCITY ---------------- MM/USEC
C                51-60 AXIAL DISTANCE TO TAPER(BLANK DEFAULT) ---- INCHES
C                61-70 ARMATURE TAPER ANGLE --------------------- DEGREES
C     CARD 4  8F10. FORMAT
C       COLUMNS  1-10 INJECTION CURRENT -------------------------- AMPS
C                11-20 LOAD INDUCTANCE ============================ UH
C                21-30 LOAD RESISTANCE ---------------------------- OHMS
C                31-40 RUN TIME ==================================== USEC
C                41-50 TIME STEP INCREMENT ------------------------ USEC
C                51-60 DIFFUSION LOSS MULTIPLIER (*TOTAL RT
C     CARD 5  3F10. FORMAT    USE BLANK FIELD AS DEFAULT
C       COLUMNS  1-10 ALUMINUM EXPLODING FOIL THICKNESS---------- INCHES
C                11-20 ALUMINUM EXPLODING FOIL WIDTH ------------- INCHES
C                21-30 ALUMINUM EXPLODING FOIL LENGTH ------------ INCHES
C     CARD 6  6F10. FORMAT   BLANK DEFAULT-PLOTS SELF SCALED
C       COLUMNS  1-10 SET PLOT 1 X AXIS TO VALUE SPECIFIED
C                11-20 SET PLOT 1 Y AXIS TO VALUE SPECIFIED
C                21-30 SET PLOT 2 X AXIS TO VALUE SPECIFIED
C                31-40 SET PLOT 2 Y AXIS TO VALUE SPECIFIED
C                41-50 SET PLOT 3 X AXIS TO VALUE SPECIFIED
C                51-60 SET PLOT 3 Y AXIS TO VALUE SPECIFIED
000002        DIMENSION PT(500),PC(500),PR(500),PL(500)
000002        DIMENSION VPT(50,50),TVAST(50,50)
000002          COMMON WD,A,BOD,VX,VY,D(50,50),TPC(50),ANA(50),
            C   IFLAG,JFLAG,JAA(50),IAA
000002          COMMON SUMG,TAPO,ANGLE,BO(50,50),TO(50,50),NSEC
000002        COMMON TURNL(50,50),RHO(50),RTURN(50,50)
000002        CALL ENTFLM(9)
000004        CALL HDCOPY(9)
000006        READ 90,XSEC,XF1,XF3,XF2
000023        XF1=XF1*1.E-6
000024        XF3=XF3*1.E-6
000025        IVOUT= XF2
000026        NF1=XF1
000030          NSEC=XSEC
000032        READ 90,(ANA(I),I=1,NSEC)
```

```
000040          READ 90,(TPC(I),I=1,NSEC)
000047       90 FORMAT(8F10.0)
000047          READ 90,A,B00,WD,VX,VY,TAPD,ANGLE
000071          READ 90,CD,EXL,EXR,TTOT,DT,RFACT
000111          READ 90,THICK,WIDTH,WLEN
000123          NX1=NX2=NX3=1
000126          NY1=NY2=NY3=1
000131          READ 90 ,XU1,YU1,XU2,YU2,XU3,YU3
000151          IF(XU1.NE.0)NX1=2
000153          IF(XU2.NE.0)NX2=2
000155          IF(XU3.NE.0)NX3=2
000157          IF(YU1.NE.0)NY1=2
000161          IF(YU2.NE.0)NY2=2
000163          IF(YU3.NE.0)NY3=2
000165            TTOT=TTOT*1.E-6
000167          VX=VX*1.E+5
000170          VY=VY*1.E+5
000171            DT=DT*1.E-6
000172            EXL=EXL*1.E-6
000174          I1=1$I2=2$I3=3$I4=4$I5=5$I6=6$I7=7$I8=8$I9=9$I10=10$I11=11$I12=12
000207          I13=13$I14=14$I15=15$I16=16$I17=17$I18=18$I19=19$I20=20$I21=21
000220          I22=22$I23=23$I24=24$I25=25$I26=26$I27=27$I28=28$I29=29$I30=30
000231          I31=31
000233          PRINT 137
000236      137 FORMAT(1H1,//////////)
000236          DO 101 I=1,NSEC
000240          NT=ANA(I)+1
000243          DO 100 J=1,NT
000245          IF(I.NE.1) GO TO 120
000247          IF(J.LE.10.AND.J.NE.5.AND.J.NE.6)PRINT 111,I1
000270          IF(J.EQ.5.OR.J.EQ.6)PRINT 113
000303      113 FORMAT(64X,*/*)
000303          IF(J.EQ.NT) PRINT 112
000311          GO TO 100
000312      111 FORMAT(64X,I1)
000312      112 FORMAT(32X*.............................................................
               1...........*)
000312      120 IF(I.NE.2) GO TO 130
000314          PRINT 121,I2,I3
000324          IF(J.EQ.NT) PRINT 122
000332          GO TO 100
000333      121 FORMAT(32X,I1,64X,I1)
000333      122 FORMAT(17X,*...............................*32X*................
               1..............*)
000333      130 IF(I.NE.4) GO TO 140
000335          PRINT 131,I4,I5,I6,I7
000351          IF(J.EQ.NT) PRINT 132
000357          GO TO 100
000360      131 FORMAT(17X,I1,30X,I1,32X,I1,30X,I1)
000360      132 FORMAT( 9X,*................*15X*................*17X*............
               1....*15X*................*)
000360      140 IF(I.NE.8) GO TO 150
000362          PRINT 141,I8,I9,I10,I11,I12,I13,I14,I15
000406          IF(J.EQ.NT) PRINT 142
000414      141 FORMAT( 9X,I1,14X,I1,15X,I2,12X,I2,17X,I2,12X,I2,15X,I2,12X,I2)
000414      142 FORMAT(4X,*..........*5X*..........*7X*..........*4X*..........*9X
               1*..........*4X*..........*7X*..........*5X*..........*)
000414          GO TO 100
```

```
000415      150 IF(I.NE.16) GO TO 100
000417          PRINT 151,I16,I17,I18,I19,I20,I21,I22,I23,I24,I25,I26,I27,I28,I29,
               1I30,I31
000463      151 FORMAT(4X,I2,5X,I2,5X,I2,6X,I2,7X,I2,6X,I2,4X,I2,6X,I2,9X,I2,6X,I2
               1,4X,I2,6X,I2,7X,I2,6X,I2,5X,I2,6X,I2)
000463          GO TO 100
000464      100 CONTINUE
000467      101 CONTINUE
000471          PRINT 37
000475          PRINT 31,C0,A,TAPD  ,EXL,VX,TTOT
000515          PRINT 32,WD,B00,ANGLE,EXR,VY,DT
000535          PRINT 38,RFACT
000543       38 FORMAT(1X*FLUX LOSS MULTIPLIER*F8.4/)
000543          PRINT 92,(I,ANA(I),TPC(I),I=1,NSEC)
000561          PRINT 36
000565          PRINT 34
000571          PRINT 35
000575          DO 17 I=1,NSEC
000603       17 TPC(I)=TPC(I)/2.54
000605          A=(A+WD/1000.)*2.54/2.
000610          B00=(B00-WD/1000.)*2.54/2.
000612          WD=WD*2.54E-3
000614          TAPD=TAPD*2.54
000616          WA=3.14159*WD**2/4.
000620          NPP=0
000621            JT=0
000621            N=HN
000623            HINT=0.
000624            HLAST=0.
000624            CLAST=C0
000626            TLAST=0.
000626            C2LAST=0.
000627            SUMG=0.
000630          NCOUNT=0
000630            BASE=0.
000631            T=0.
000631          IF(T.EQ.0.)C=C0
          C
000634            DO 50 I=1,NSEC
000636            II=FLOAT(I)/2.
000640          NT=ANA(II)+1.
000643          IF(I.GT.1)BASE=D(II,NT-1)+   FLOAT(MOD(I,2))/TPC(I)/SPLIT(I)
               1+(ANA(II)-FLOAT(NT-1))/TPC(II)+1./TPC(II)
000671            NN=ANA(I)+1.
000674            DO 51 J=1,NN
000724            D(I,J)=(FLOAT(J-1.)/TPC(I)+BASE
000730          IF(AMOD(ANA(I),1.).EQ.0. )D(I,NN)=D(I,NN-1)
000733     51     CONTINUE
000734     50     CONTINUE
000737          NAA=ANA(II)+1.
000741            NPT=TTOT/DT
000743          RFOIL=0.
000744          IF(WIDTH.EQ.0.)GO TO 53
000746          IF(T.EQ.0.)RFOIL=8.4E-6*WLEN*2.54/(THICK*WIDTH*2.54**2)
000754     53     CONTINUE
          C
000754          SR=R+EXR+RFOIL
000757            CALL SR1(T,CL)
```

```
000761          CALL SR2(T,R)
000763          SL=CL+EXL
000765          SR=R+EXR
000767        SR=SR+RFOIL
000770          IF(T.EQ.0.)CLC=SL
000773        H=SR*(1.+RFACT)/SL
000776          DELH=(H+HLAST)/2.*(T-TLAST)
001003          HINT=HINT+DELH
001005          ATT=EXP(-HINT)
001011        C=CLC/SL*C0*ATT
001013        NPP=NPP+1
001015        PT(NPP)=T*1.E+6
001017        PC(NPP)=C*1.E-3
001023        IF(NY1.EQ.2.AND.C*1.E-3.GE.YU1)PC(NPP)=YU1
001035        PR(NPP)=SR
001035        PL(NPP)=SL*1.E+6
001040          C2=C**2
001042          G=(C2+C2LAST)/2.*(T-TLAST)
001046          SUMG=SUMG+G
001050        CALL FOIL      (SUMG,RFOIL,WLEN,WIDTH,THICK,T,C,TTOT)
001060          TLAST=T
001061        VOLT=(C-CLAST)/DT*EXL+C*EXR
001066        IF(T.GT.TTOT)GO TO 208
001072        IF(SL-EXL.LE.0.)PRINT 26,T,C,SL,SR,VOLT,SUMG,ATT
001116        IF(SL-EXL.GT.0.)PRINT 25,T,C,SL,SR,VOLT,SUMG,ATT,IAA,JFLAG
001146        IF(T.EQ.0.)SLLAST=SL
001151        SLDOT=(SL-SLLAST)/DT
001154        EDOUT=SLDOT/SL
001154        SLLAST=SL
001155     98 FORMAT(5X,*LDOT/L=*E20.8)
001155        IF(IVOUT.EQ.0)GO TO 58
001156        NCOUNT=NCOUNT+1
001160        IF(NCOUNT.EQ.IVOUT)NCOUNT=0
001161        VPTSUM=0.
001162        IF(NCOUNT.EQ.0)PRINT 66
001166     66 FORMAT(1X,6(1X*TURN*5X*VOLTS/*4X))
001166     67 FORMAT(1X,6(2X*NO.*7X*TURN*4X))
      C
001166        DO 60 I=1,NSEC
001170        NV=ANA(I)+1.
001172        IF(NCOUNT.EQ.0)PRINT 62,I
001201     62 FORMAT(1X,*WINDING NUMBER-----*I3 )
001201        DO 128 J=1,NV
001207        ATERM=1.
001210        IF(J.EQ.NV)ATERM=ANA(I)-FLOAT(IFIX(ANA(I)))
001215        RTN=ATERM*RHO(I)*(2.*3.14159*A+1./TPC(I))/WA
001223        IF(T.EQ.0.)TVAST(I,J)=TURNL(I,J)
001226        VPT(I,J)=TURNL(I,J)*(C-CLAST)/DT
             1+C*(TURNL(I,J)-TVAST(I,J))/DT
             2+RTURN(I,J)*C/SPLIT(I)
001250        IF(D(I,NV-1).GE.D(I,NV))VPT(I,NV  )=0.
001262        IF(I.EQ.1.OR.I.EQ.2.OR.I.EQ.4.OR.I.EQ.8.OR.I.EQ.16)
             1VPTSUM=VPTSUM+VPT(I,J)
001310    128 CONTINUE
001313        IF(NCOUNT.EQ.0)PRINT 64,(J,VPT(I,J),J=1,NV)
001332     64 FORMAT(1X,6(2X,I3,F11.1,4X))
001332     60 CONTINUE
001335        VVV=VPTSUM+VOLT
```

```
001336          IF(NCOUNT.EQ.0)PRINT 69,VVV
001345       69 FORMAT(1X,/1X,*THE VOLTAGE SUM IS------*E20.8/)
001345          DO 81 I=1,NSEC
001347          NV=ANA(I)+1.
001352          DO 82 J=1,NV
001361          TVAST(I,J)=TURNL(I,J)
001362       82 CONTINUE
001363       81 CONTINUE
001366       68 CONTINUE
          C
001366            HLAST=H
001367            C2LAST=C2
001371          IF(NF1.GE.0)GO TO 5
001373            IF(C/CLAST.GE.1.2.AND.JT.EQ.0)DT=DT/10.
001404     5              CONTINUE
001404          IF(XF1.GT.0.AND.T.GE.X-1)DT=XF3
001415            IF(C/CLAST.GE.1.2)JT=1
001422            CLAST=C
001423                    T=T+DT
001425            IF(T.LT.TTOT+DT)GO TO 53
001430     20     CONTINUE
001430    208 CONTINUE
001430          PRINT 37
001434          PRINT 203
001440    203 FORMAT(15X*AXIAL*15X*CLOSURE*13X*ARMATURE*12X*WINDING*3X*TURN*/
             115X*DIST*16X*TIME*16X*RADIUS*/15X*CM*18X*USEC*16X*CM*)
001440          DO 200 I=1,NSEC
001442          NT=ANA(I)+1
001445          DO 205 J=1,NT
001447          PRINT 201,D(I,J),TO(I,J),BO(I,J),I,J
001475          IF(J.EQ.NT)PRINT 202,D(I,NT+1),TO(I,NT+1),BO(I,NT+1)
001522    201 FORMAT(5X,F15.4,5X,6PF15.4,5X,0PF15.4,5X,2I10)
001522    202 FORMAT(1X*END*1X,F15.4,X*END*X,6PF15.4,X*END*X,0PF15.4,X*END     EN
             1D     END*)
001522    205 CONTINUE
001525    200 CONTINUE
          C
001527     37 FORMAT(1H1)
001527     31 FORMAT(1X,*INJ CUR*,F8.1,4X,*COIL ID *,F8.4,4X,*ARM DIST*F8.3,4X,
             1*LOAD L*,6PF8.4,6X,*AXIAL VEL *,-5PF8.4,4X,*RUN TIME*6PF8.3)
001527     32 FORMAT(1X,*WIRE DIA*F8.4,4X,*ARM OD *F8.4,4X,*ARM ANGLE*F7.3,4X,
             C*LOAD R*,F8.4,
             16X,*RADIAL VEL*,-5PF8.4,4X,*T INC*6PF8.4)
001527     92 FORMAT(1X*WND*I4,2X*TURNS* F7.3,2X*TPI*F7.3,5X,
             2          *WND*I4,2X*TURNS*F7.3,2X*TPI*F7.3,5X,
             3          *WND*I4,2X*TURNS*F7.3,2X*TPI*F7.3,5X/)
001527     36 FORMAT(5X*.......................................................*
             1*.......................................................*)
001527     34 FORMAT(X,/,6X,*TIME*,8X,*CURRENT*,5X,*INDUCTANCE*,5X,*RESISTANCE*,
             19X,*OUTPUT*,9X,*ACTION*,10X,*ATTEN*,4X*WINDING* 6X*TURN*)
001527    35      FORMAT(6X,*USEC*,11X,*AMPS*,9X,*UHENRY*11X,*OHM *,10X,*VOLTS*,
             19X,*A2-SEC*/)
001527    25      FORMAT( 6PF10.4,0PF15.0,6PF15.4,0PF15.4,F15.1,E15.4,F15.5,2I10)
001527    26      FORMAT( 6PF10.4,0PF15.0,6PF15.4,0PF15.4,F15.1,E15.4,F15.5,
             15X*XXXXXXXXXXXXXXX*)
001527          CALL AICRT3(0,0,PT,PC,NPP,1,2,1,48,48H                          LOBO
             1                    ,48H                    TIME IN USEC
             2       ,48H                    CURRENT IN KA                    , 1,1,15
```

```
                3.,16.,NX1,0.,XU1,NY1,0.,YU1)
001555           CALL AICRT3(0,0,PT,PL,NPP,1,2,1,48,48H                          LOBO
                1                    ,48H                    TIME IN USEC
                2       ,48H                 INDUCTANCE IN UHEN                  , 1,1,16
                3.,16.,NX3,0.,XU3,NY3,0.,YU3)
001603           CALL AICRT3(0,0,PT,PR,NPP,1,2,1,48,48H                          LOBO
                1                    ,48H                    TIME IN USEC
                2       ,48H                 RESISTANCE IN OHMS                  , 1,1,16
                3.,16.,NX2,0.,XU2,NY2,0.,YU2)
001631           CALL EXTFL9(0)
001633              END
          C
```

PROGRAM LENGTH INCLUDING I/O BUFFERS
026420

FUNCTION ASSIGNMENTS

STATEMENT ASSIGNMENTS

5	-	001405	20	-	001431	25	-	002237	26	-	002246
31	-	002111	32	-	002127	34	-	002211	35	-	002226
36	-	002174	37	-	002107	38	-	001771	51	-	000734
53	-	000755	60	-	001333	62	-	002026	64	-	002036
66	-	002015	67	-	002021	68	-	001367	69	-	002042
90	-	001651	92	-	002151	98	-	002011	100	-	000465
111	-	001664	112	-	001666	113	-	001661	120	-	000313
121	-	001677	122	-	001702	128	-	001311	130	-	000334
131	-	001713	132	-	001720	137	-	001656	140	-	000361
141	-	001732	142	-	001741	150	-	000416	151	-	001756
201	-	002070	202	-	002076	203	-	002053	205	-	001523
208	-	001431									

BLOCK NAMES AND LENGTHS

	-	030650

VARIABLE ASSIGNMENTS

A	-	000001C01	ANA	-	004773C01	ANGLE	-	005144C01	ATERM	-	020327
ATT	-	020316	BASE	-	020277	B0	-	005145C01	B00	-	000002C01
C	-	020301	CL	-	020311	CLAST	-	020273	CL0	-	020313
C0	-	020176	C2	-	020317	C2LAST	-	020275	D	-	000005C01
DELH	-	020315	DT	-	020202	EDOUT	-	020324	EXL	-	020177
EXR	-	020200	G	-	020320	H	-	020314	HINT	-	020271
HLAST	-	020272	HN	-	020270	I	-	020175	IAA	-	005141C01
IT	-	020302	IVOUT	-	020173	I1	-	020223	I10	-	020234
I11	-	020235	I12	-	020236	I13	-	020237	I14	-	020240
I15	-	020241	I16	-	020242	I17	-	020243	I18	-	020244
I19	-	020245	I2	-	020224	I20	-	020246	I21	-	020247
I22	-	020250	I23	-	020251	I24	-	020252	I25	-	020253
I26	-	020254	I27	-	020255	I28	-	020256	I29	-	020257
I3	-	020225	I30	-	020260	I31	-	020261	I4	-	020226
I5	-	020227	I6	-	020230	I7	-	020231	I8	-	020232
I9	-	020233	J	-	020263	JAA	-	005057C01	JFLAG	-	005056C01
JT	-	020266	N	-	020267	NAA	-	020304	NCOUNT	-	020276
NF1	-	020174	NN	-	020303	NPP	-	020265	NPT	-	020305
NSEC	-	016755C01	NT	-	020262	NV	-	020326	NX1	-	020207
NX2	-	020210	NX3	-	020211	NY1	-	020212	NY2	-	020213

```
                SUBROUTINE SR1(T,TLM)
000004          DIMENSION SL(50,50),SA(50,50),SC(50,50),FRAC(50),NTA(50)
000004          COMMON WD,A,B00,VX,VY,D(50,50),TPC(50),ANA(50),
              C IFLAG,JFLAG,JAA(50),IAA
000004          COMMON SUMG,TAPD,ANGLE, B0(50,50),T0(50,50),NSEC
000004        COMMON TURNL(50,50),RTJ(50),RTURN(50,50)
000004        WA=3.14159*WD**2/4.
000006        AG=ANGLE/57.3
000010          TLM=0.
000011          IFLAG=0
000012          JFLAG=0
        C
000013          DO 60 I=1,NSEC
000015          FRAC(I)=ANA(I)-FLOAT(IFIX(ANA(I)))
000020        JAA(I)=0.
000021          NT=ANA(I)+1.
000024        DO 28 J=1,NT
000033        RTURN(I,J)=0.
000034     28 TURNL(I,J)=0.
000035          DO 62 J=1,NT
000040          IF(D(I,J).LE.TAPD)B0(I,J)=B00
000051          IF(D(I,J).GT.TAPD)B0(I,J)=B00+(D(I,J)-TAPD)
              C *SIN(AG)/COS(AG)
000076     62   CONTINUE
000101        DDD=FRAC(I)/TPC(I)
000103        IF( D(I,NT-1).EQ. D(I,NT))DDD=1./TPC(I)
000111        D(I,NT+1)=D(I,NT)+DDD
000117          IF(D(I,NT+1).LE.TAPD)B0(I,NT+1)=B00
000125        IF(D(I,NT+1).GT.TAPD.AND.D(I,NT-1).EQ.D(I,NT))
             1B0(I,NT+1)=B00+(D(I,NT)-TAPD+      I./TPC(I))*SIN(AG)/COS(AG)
000157        IF(D(I,NT+1).GT.TAPD.AND.D(I,NT-1).NE.D(I,NT))
             1B0(I,NT+1)=B00+(D(I,NT)-TAPD+FRAC(I)/TPC(I))*SIN(AG)/COS(AG)
000214     60   CONTINUE
000217          DO 20 I=1,NSEC
000221          NTA(I)=ANA(I)+1.
000223          NT=NTA(I)
000224          DO 31 J=1,NT
000241          T0(I,J)=D(I,J)/VX+(A-WD    -B0(I,J))/VY
000244     31   CONTINUE
000252        T0(I,NT+1)=D(I,NT+1)/VX+(A-WD    -B0(I,NT+1))/VY
000260        NNN=NT+1
000264     20   CONTINUE
000266          SUML=0.
000267          DO 1 I=1,NSEC
000271          NT=ANA(I)+1.
000273          JFL=1
000274          IFLAG=0
000275          DO 27 J=1,NT
000305          IF(T.LT.T0(I,J))GO TO 32
000307          JFL=J
000310          JFLAG=J
000311          IFLAG=I
000311        IAA=I
000312          SL(I,J)=0.
000313        JAA(I)=J
000314     27   CONTINUE
000316        IF(T.GE.T0(NSEC,NT+1))TLM=0
000324        IF(T.GE.T0(I,NT).AND.T.LE.T0(I,NT+1))GO TO 32
```

```
000340            GO TO 1
000340     32     CONTINUE
         C
000340          IF(JFL.EQ.NT.AND.D(I,NT).EQ.D(I,NT-1))JFL=JFL-1
000353            DO 2 J=JFL,NT
000355          IF(T.EQ.0.)RHO(I)=1.864E-6
000360          RTURN(I,J)=RHO(I)*(2.*3.14159*A+1./TPC(I))/WA
000373          IF(J.EQ.NT)RTURN(I,J)=RTURN(I,J)*FRAC(I)
000400            IF(IFLAG.EQ.0.OR.J.NE.JFL)TSM=1.
000410            IF(IFLAG.GT.0.AND.J.EQ.JFL)TSM=1.-(T-TO(I,JFL))/
             C  (TO(I,JFL+1)-TO(I,JFL))
000430          IF(JFL.EQ.NT-1.AND.D(I,NT).EQ.D(I,NT-1))
             1TSM=1.-(T-TO(I,JFL+1))/(TO(I,JFL+2)-TO(I,JFL+1))
000455            IF(TSM.LE.0.)TSM=0.
000460     23     CONTINUE
000460            SL(I,J)=4.*3.14159*A*(ALOG(8.*A/WD)-1.75)*1.E-9
000474          IF(J.EQ.JFL)SL(I,J)=SL(I,J)*TSM
000501            IF(J.EQ.NT)SL(I,J)=SL(I,J)*FRAC(I)
000507            SL(I,J)=SL(I,J)/SPLIT(I)
000521            SUML=SUML+SL(I,J)
000523            SA(I,J)=0.
000524            SC(I,J)=0.
         C
000525            DO 3 K=1,NSEC
000531            NP=ANA(K)+1.
000533            JPP=1
000534            IF2=0
000535            DO 47 NG=1,NP
000546            IF(T.LT.TO(K,NG))GO TO 42
000550            JPP=NG
000551            IF2=K
000551     47     CONTINUE
000554          IF(T.GE.TO(I,NP).AND.T.LE.TO(I,NP+1))GO TO 42
000567            GO TO 3
000567     42     CONTINUE
         C
000567          IF(JPP.EQ.NP.AND.D(I,NP).EQ.D(I,NP-1))JPP=JPP-1
000602            DO 4 L=JPP,NP
000604            IF(IF2  .EQ.0.OR.L.NE.JPP)TSO=1.
000614            IF(IF2  .GT.0.AND.L.EQ.JPP)TSO=1.-(T-TO(K,JPP))/
             C    (TO(K,JPP+1)-TO(K,JPP))
000634          IF(JPP.EQ.NP-1.AND.D(I,NP).EQ.D(I,NP-1))
             1TSO=1.-(T-TO(I,JPP+1))/(TO(I,JPP+2)-TO(I,JPP+1))
000661            IF(TSO.LE.0.)TSO=0.
000664     24     CONTINUE
000664            H=D(K,L)-D(I,J)
000674          IF(K.EQ.I.AND.L.EQ.J)XM=0.
000703            IF(K.EQ.I.AND.L.EQ.J)GO TO 30
000711          IF(H.EQ.0.)GO TO 30
000712            CALL AMOT(A,A,H,XM)
000715          IF(L.EQ.JPP)XM=XM*TSO
000722          IF(J.EQ.JFL)XM=XM*TSM
000726            IF(L.EQ.NP)XM=XM*FRAC(K)
000732            IF(J.EQ.NT)XM=XM*FRAC(I)
000736            XM=XM/SPLIT(K)
000741            XM=XM/SPLIT(I)
000744            SC(I,J)=SC(I,J)+XM
000753     30     CONTINUE
```

```
000753            IF(T.LE.D(K,L)/VX)B=BO(K,L)
000765            IF(T.GT.D(K,L)/VX)B=BO(K,L)+(T-(D(K,L)/VX))*VY
001004          IF(B.GE.A-WD)B=A-WD
001011            CALL AMUT(A,B,H,XA)
001014          IF(L.EQ.JPP)XA=XA*TSO
001021          IF(J.EQ.JFL)XA=XA*TSM
001025          XA=XA*B/(A-WD)
001030            IF(L.EQ.NP)XA=XA*FRAC(K)
001035            IF(J.EQ.NT)XA=XA*FRAC(I)
001041            XA=XA/SPLIT(K)
001044            XA=XA/SPLIT(I)
001047            SA(I,J)=SA(I,J)+XA
001056       39 CONTINUE
001056    4       CONTINUE
001061    3       CONTINUE
001067            TLM=TLM+SL(I,J)+SC(I,J)-SA(I,J)
001072          TURNL(I,J)=SL(I,J)+SC(I,J)-SA(I,J)
001074          JFLO=JFL-1
001076          DO 121 NO=1,JFLO
001111          IF(JFLO.EQ.0)GO TO 124
001113      121 TURNL(I,NO)=0.
001115      124 CONTINUE
001115    2       CONTINUE
001120    1       CONTINUE
001123            RETURN
001123            END
          C
```

SUBPROGRAM LENGTH
020123

FUNCTION ASSIGNMENTS

STATEMENT ASSIGNMENTS

1	-	001121	2	-	001116	3	-	001062	4	-	001057
23	-	000461	24	-	000665	27	-	000315	30	-	000754
32	-	000341	39	-	001057	42	-	000570	47	-	000552
60	-	000215	62	-	000077	124	-	001116			

BLOCK NAMES AND LENGTHS
- 030650

VARIABLE ASSIGNMENTS

A	-	000001C01	AG	-	020075	ANA	-	004773C01	ANGLE	-	005144C01
B	-	020117	BO	-	005145C01	BOO	-	000002C01	D	-	000005C01
DDD	-	020101	FRAC	-	017730	H	-	020115	I	-	020076
IAA	-	005141C01	IFLAG	-	005055C01	IF2	-	020111	J	-	020100
JAA	-	005057C01	JFL	-	020104	JFLAG	-	005056C01	JFLO	-	020121
JPP	-	020110	K	-	020106	L	-	020113	NG	-	020112
NNN	-	020102	NO	-	020122	NP	-	020107	NSEC	-	016755C01
NT	-	020077	NTA	-	020012	RHO	-	023662C01	RTURN	-	023744C01
SA	-	006120	SC	-	013024	SL	-	001214	SUML	-	020103
TAPD	-	005143C01	TPC	-	004711C01	TSM	-	020105	TSO	-	020114
TURNL	-	016756C01	TO	-	012051C01	VX	-	000003C01	VY	-	000004C01
WA	-	020074	WD	-	000000C01	XA	-	020120	XM	-	020116

```
                SUBROUTINE SR2(T,ROUT)
000004          DIMENSION RHOA(100),SGA(100),SG(50)          ,R(50)
000004          DIMENSION RP1(50),RP2(50),RP3(50),WL(50)
000004          COMMON WD,A,BOO,VX,VY,D(50,50),TPC(50),ANA(50),
              C IFLAG,JFLAG,JAA(50),IAA
000004          COMMON SUMG,TAPD,ANGLE,BO(50,50),TO(50,50),NSEC
000004        COMMON TURNL(50,50),RHO(50),RTURN(50,50)
000004          DATA (RHOA(I),I=1,96)/1.864,1.883,2.047,2.559,2.758,3.399,
              C 3.590,4.217,4.637,4.641,5.267,6.105,
              C 6.669,7.374,8.798,9.218,9.920,10.622,
              C 11.466,12.313,13.951,15.440,17.136,18.129,
              C 18.912,19.28,20.08,20.60,21.10,21.97,23.19,24.20,25.24,
              C 26.37,27.86,29.39,30.36,32.39,33.99,35.53,37.21,39.11,
              C 41.1,42.80,44.41,47.96,52.48,52.50,53.61,57.05,60.39,
              C 64.16,67.66,67.51,70.56,74.60,79.17,85.42,91.73,101.,
              C 116.,134.,164.,187.,195.,255.,348.,423.,500.,580.,620.,
              C 540.,493.,449.,386.,315.,255.,220.,194.,178.,162.,147.,
              C 135.,124.,117.,110.,106.,104.,98.9,92.8,86.8,79.9,72.4,
              C 63.8,56.,49./
000004          DATA (SGA(I),I=1,96)/0.,293.2,2784.7,10589.,13617.,
              C 23364.,26276.,33930.,39909.,43986.,47407.,53296.,61347.,
              C 65273.,73027.,76744.,80401.,83011.,84924.,87296.,89258.,
              C 91157.,92363.,93282.,94256.,95802.,98487.,102360.,104410.,
              C 107870.,112470.,116370.,119930.,124210.,127990.,131760.,
              C 135520.,138710.,141000.,143450.,145560.,147500.,149710.,
              C 151260.,152250.,152910.,153570.,154930.,156020.,157260.,
              C 158020.,158670.,159200.,160430.,161550.,162880.,164040.,
              C 165310.,166250.,166820.,167450.,168170.,168580.,168930.,
              C 168940.,169540.,170600.,170800.,171800.,172600.,173000.,
              C 174200.,174690.,175300.,176050.,176950.,177620.,178140.,
              C 178680.,179200.,179910.,180960.,182020.,183680.,185280.,
              C 187240.,188830.,189970.,191020.,192530.,194560.,198130.,
              C 202870.,209270.,215820.,223550./
000004          WA=3.14159/4.*WD**2
000005          AFLAG=1
000007          IF(T.NE.0.)GO TO 13
000010          DO 12 I=1,96
000015     12   RHOA(I)=RHOA(I)*1.E-6
000017     13   CONTINUE
000017        DO 202 I=1,50
000024    202 R(I)=0.
000026        DO 210 I=1,NSEC
000027        EFL=SQRT((2.*3.14159*A)**2+(1./TPC(I)**2))
000036        NT=ANA(I)+1.
000041        M=1
000042        DO 220 J=1,NT
000045        M=J-1
000046        IF(T.LT.TO(I,1))GO TO 215
000052        IF(TO(I,J).GE.T)GO TO 250
000056        IF(J.NE.NT)GO TO 220
000063        N=1
000063        WL(I)=(T-TO(I,NT))/(TO(I,NT+1)-TO(I,NT))*EFL
            1 *(ANA(I)-FLOAT(IFIX(ANA(I))))
            1+(FLOAT(NT-N))*EFL
000075        GO TO 260
000076    220 CONTINUE
000101    215 WL(I)=0.
000103        GO TO 260
```

```
000103      250 WL(I)=FLOAT(M-1)*EFL
                1+(T-TO(I,M))/(TO(I,M+1)-TO(I,M))*EFL
000120      260 WL(I)=ANA(I)*EFL-WL(I)
000123          IF(WL(I).LE.0.)WL(I)=0.
000127      210 CONTINUE
000132          DO 120 I=1,NSEC
000133          SG(I)=SUMG/(100.*WA)**2/ ((SPLIT(I))**2)
000142          DO 130 J=2,96
000145        M=J
000146          IF(SGA(J).LT.SG(I))GO TO 130
000151        IF(SG(I).GE.SGA(96))SG(I)=SGA(96)
000156          GO TO 140
000157    130   CONTINUE
000161    140   RHO(I)=RHOA(M-1)+(RHOA(M)-RHOA(M-1))*(SG(I)-SGA(M-1))
            C   /(SGA(M)-SGA(M-1))
000173    120   CONTINUE
000175          DO 90 I=1,NSEC
000176          IF(T.LT.TO(I,1))TIM=1.
000202          NT=ANA(I)+1.
000205          IF(T.GE.TO(I,1))TIM=1.-(T-TO(I,1))/(TO(I,NT)-TO(I,1))
000216          IF(TIM.LE.0.)TIM=0.
000221          R(I)=RHO(I)*WL(I)/WA
000225    2001 FORMAT(5X,3E20.8,I5)
000225    90    CONTINUE
000227          J=8
000230          DO 70 I=16,30,2
000232          RP1(J)=R(J)
000234        IF(R  (I).LE.0..AND.R  (I+1).LE.0.)R  (I)=R  (I)+1.E-9
000247          IF(NSEC.EQ.31)RP1(J)=R(I)*R(I+1)/(R(I)+R(I+1))+R(J)
000260     104 FORMAT(E15.6,I5)
000260          J=J+1
000262    70    CONTINUE
000264          J=4
000265          DO 71 I=8,14,2
000277          RP2(J)=R(J)
000300        IF(RP1(I).LE.0..AND.RP1(I+1).LE.0.)RP1(I)=RP1(I)+1.E-9
000312          IF(NSEC.GE.15)RP2(J)=RP1(I)*RP1(I+1)/(RP1(I)+RP1(I+1))+R(J)
000317          J=J+1
000320    71    CONTINUE
000322          J=2
000323          DO 72 I=4,6,2
000326          RP3(J)=R(J)
000330        IF(RP2(I).LE.0..AND.RP2(I+1).LE.0.)RP2(I)=RP2(I)+1.E-9
000343          IF(NSEC.GE.7)RP3(J)=RP2(I)*RP2(I+1)/(RP2(I)+RP2(I+1))+R(J)
000355    2000 FORMAT(5X,E20.8,I5)
000355          J=J+1
000357    72    CONTINUE
000361        IF(RP3(2).LE.0..AND.RP3(3  ).LE.0.)RP3(2)=RP3(2)+1.E-9
000373        ROUT=R(1)
000374        IF(NSEC.GE.3)ROUT=RP3(2)*RP3(3)/(RP3(2)+RP3(3))+R(1)
000403          RETURN
000404          END
        C
```

SUBPROGRAM LENGTH
001460

```
                    FUNCTION SPLIT(I)
000002              IF(I.EQ.1)SPLIT=1.
000005            IF(I.GE.2.AND.I.LE.3)SPLIT=2.
000017              IF(I.GE.4 .AND.I.LE.7)SPLIT=4.
000031              IF(I.GE.8 .AND.I.LE.15 )SPLIT=8.
000043              IF(I.GE.16 .AND.I.LE.31 )SPLIT=16.
000055              IF(I.GE.32 .AND.I.LE.63 )SPLIT=32.
000067              RETURN
000071              END
          C
```

```
SUBPROGRAM LENGTH
000120

FUNCTION ASSIGNMENTS

STATEMENT ASSIGNMENTS

BLOCK NAMES AND LENGTHS

VARIABLE ASSIGNMENTS
SPLIT   =   000117

START OF CONSTANTS
000074

START OF TEMPORARIES
000103

START OF INDIRECTS
000117

UNUSED COMPILER SPACE
127400
```

```
                    SUBROUTINE AMUT(A,B,D,XM)
000006              C1=2.*SQRT(A*B)/SQRT((A+B)**2+D**2)
000025              C0=(1.-C1)/(1.+C1)
000027            IF(C0.LE.0.)C0=1.E-6
000033              X=ALOG(4./C0)
000050              F0=X+C0**2/4.*(X-1.)+C0**4/64.*9.*(X-7./6.)+C0**6/256.*25.
                C   *(X-111./90.)+C0**8/16384.*1225.*(X-1.25)
000067              E0=1.+C0**2/2.*(X-.5)+C0**4/16.*3.*(X-13./12.)+C0**6/128.
                C   *15.*(X-1.2)+C0**8/2048.*175.*(X-1.25)
000110              XM=4.*3.14159*SQRT(A+B)*(F0/C1/(C1+1.)-E0*(C1+1.)/C1)*1.E-9
000126              RETURN
000126              END
          C
```

SUBPROGRAM LENGTH
000270

FUNCTION ASSIGNMENTS

STATEMENT ASSIGNMENTS

BLOCK NAMES AND LENGTHS

VARIABLE ASSIGNMENTS

C0	- 000264	C1	- 000263	E0	- 000267	F0	- 000266
X	- 000265						

START OF CONSTANTS
000131

START OF TEMPORARIES
000200

START OF INDIRECTS
000263

UNUSED COMPILER SPACE
127100

```
                SUBROUTINE FOIL(SUMG,RFOIL,WLEN,WIDTH,THICK,T,C,TTOT)
000012          DIMENSION      TA(300),EA(300),GA(300),CA(300),VA(300),RA(300),
               1PA(300),SE(300),SGO(300)
000012          DIMENSION RHOA(60),SGA(60)
000012          DATA (RHOA(I),I=1,55)/8.4,8.65,8.9,9.5,10.1,10.7,11.3,11.9,12.5,
               113.27,14.02,14.53,15.09,21.94,30.4,38.36,47.38,55.35,62.26,
               269.71,76.63,85.41,96.38,105.8,112.5,122.7,139.7,164.9,200.2,
               3253.,306.4,351.1,375.2,388.5,396.7,396.3,389.4,376.2,361.7,
               4340.,317.2,300.5,283.,264.6,248.3,235.6,222.,201.5,201.4,
               5192.4,184.3,175.1,172.4,166.7,163.9/
000012          DATA (SGA(I),I=1,55)/0.,703.32,1538.7,2736.3,4118.4,5602.6,
               17022.4,8471.1,10004.,11493.,13120.,14693.,16335.,25103.,32721.,
               238572.,45142.,50558.,54685.,59006.,62166.,64811.,66615.,68096.,
               369576.,70736.,71821.,72588.,73673.,75261.,76020.,77027.,77842.,
               478280.,79464.,82617.,84030.,85626.,87960.,91287.,94814.,98047.,
               5102040.,105040.,110620.,114520.,118810.,123600.,128150.,
               6133960.,140290.,146870.,154280.,160930.,167020./
000012          WA=THICK*WIDTH*2.54**2
000014          IF(WA.GT.0.)GO TO 9
000016          RFOIL=0.
000016          GO TO 17
000017        9 CONTINUE
000017          WL=WLEN*2.54
000020          FACT=4.5725E+12
000022          IF(T    .NE.0.)GO TO 8
000023          DO 12 I=1,55
000027       12 RHOA(I)=RHOA(I)*1.E-6
000034        8 CONTINUE
000034          SG=SUMG/(100.*WA)**2
000037          DO 25 J=2,55
000040          IF(SGA(J).LT.SG) GO TO 25
000043          RHO=RHOA(J-1)+(RHOA(J)-RHOA(J-1))*(SG-SGA(J-1))/(SGA(J)-SGA(J-1))
000053          GO TO 30
000053       25 CONTINUE
000055          RHO=FACT/SG**2*1.E-6
000060       30 CONTINUE
000060          RFOIL=RHO*WL/WA
000063          SR1=RFOIL
000063          WDEN=2.699
000065          WAC=WA*100.
000066          WLC=WL*10.
000070          IF(T.EQ.0)JJ=0
000072          IF(T.EQ.0)TLAST=0.
000074          IF(T.EQ.0)CLAST=C
000077          IF(T.EQ.0.)RLAST=SR1
000105          E=E+(T-TLAST)/2.*(C**2*SR1+CLAST**2*RLAST)
000113          CLAST=C
000114          TLAST=T
000115          RLAST=SR1
000117          G=SUMG
000120          JJ=JJ+1
000122          TA(JJ)=T
000122          EA(JJ)=E
000124          GA(JJ)=G
000126          CA(JJ)=C
000130          VA(JJ)=C*SR1
000132          RA(JJ)=SR1
000134          PA(JJ)=C**2*SR1
```

```
000136          SE(JJ)=E/WAC/WLC/WDEN*1000.
000144          SGO(JJ)=G/WAC**2
000150          TR2= 25238. $TR3= 32035. $TR4= 48561. $TR5= 65776. $TR6=167019.
000157          IF(T.LT.TTOT)GO TO 241
000162       37 FORMAT(1H1)
000162      255 FORMAT (1H1,10X,*TIME*,8X,*CURRENT*,10X,*VOLTS*,11X,*OHMS*,
                110X,*POWER*,9X,*ENERGY*,9X,*ACTION*,10X,*GDENS*10X*EDENS*/
                21H ,6X*MICROSEC*11X*AMPS*36X*KILOWATTS*9X*MILLIJ*7X,
                9*AMP2 SEC*,3X,*AMP2 SEC/MM4*11X*J/GM*/)
000162      245 PRINT 255
000166          DO 240 K=1,JJ
000173          IF(          K.EQ.51.OR.K.      EQ.101.OR.K.EQ.151.OR.K.EQ.201.OR.
                1K.EQ.251)PRINT 255
000225      250 IF(SGO(K).LT.TR2)KEY=3HS
000232          IF(SGO(K).GE.TR2)KEY=3HS+L
000240          IF(SGO(K).GE.TR3)KEY=3HL
000246          IF(SGO(K).GE.TR4)KEY=3HL+V
000254          IF(SGO(K).GE.TR5)KEY=3HARC
000262          IF(SGO(K).GE.TR6)KEY=3HEXT
000270          PRINT 260,KEY,TA(K),CA(K),VA(K),RA(K),PA(K),EA(K),GA(K),SGO(K),
                1SE(K)
000320      260 FORMAT(X,A3,6PF11.3,0PF15.1,F15.1,F15.5,-3PF15.3,3PF15.2,0PF15.4,
                1E15.4,F15.3)
000324      240 CONTINUE
000326      241 CONTINUE
000326       17 CONTINUE
000326          RETURN
000327          END
```

SUBPROGRAM LENGTH
006103

FUNCTION ASSIGNMENTS

STATEMENT ASSIGNMENTS

8	-	000035	9	-	000020	17	-	000327	25	-	000054
30	-	000061	37	-	000350	241	-	000327	245	-	000163
250	-	000226	255	-	000352	260	-	000420			

BLOCK NAMES AND LENGTHS

VARIABLE ASSIGNMENTS

C	-	000000	CA	-	002253	CLAST	-	006070	E	-	006072
EA	-	001123	FACT	-	006055	G	-	006073	GA	-	001577
I	-	006056	J	-	006060	JJ	-	006066	K	-	006101
KEY	-	006102	PA	-	004057	RA	-	003403	RHO	-	006061
RHOA	-	005663	RLAST	-	006071	SE	-	004533	SG	-	006057
SGA	-	005757	SGO	-	005207	SR1	-	006062	TA	-	000447
TLAST	-	006067	TR2	-	006074	TR3	-	006075	TR4	-	006076
TR5	-	006077	TR6	-	006100	TTOT	-	000001	VA	-	002727
WA	-	006053	WAC	-	006064	WDEN	-	006063	WL	-	006054
WLC	-	006065									

START OF CONSTANTS
000332

This Page Intentionally Left Blank

Appendix 3

CMF Device Voltage

This Page Intentionally Left Blank

APPENDIX 3

CMF DEVICE VOLTAGE

The major internal and external CMF device voltages of design concern are illustrated in Fig. 1A. From a straightforward application of Kirchoff's laws, it follows that the individual turn voltage, V_i^*, is given by

$$V_i^* = \dot{L}_i^* I + L_i^* \dot{I} + IR_i^* \tag{A1}$$

where L_i^* and R_i^* are turn inductance and resistance, respectively. It should be noted in Eq. (A1) that the term involving $\dot{L}_i^*$ is a voltage generation term and thus is of opposite sense to the two voltage drops. Similarly, from Fig. 1A, it can be seen that the turn to armature voltage gradient at the jth turn is given by

$$F_j = \sum_i V_i^*/(A - B_j) \quad . \tag{A2}$$

It should be noted that the separation distance $(A - B_j)$ between coil and armature is directly proportional to tan θ and, therefore, high voltage gradients might be expected in small closure angle devices. Codes SWL and BWL provide as an output $V_{out} = IR_{load} + L_{load}\dot{I}$ and, as an option, the turn voltage V_i^*. Typical computed turn voltages from code SWL (see SWL example in Section V for input parameters) are shown graphically in Fig. 2A.

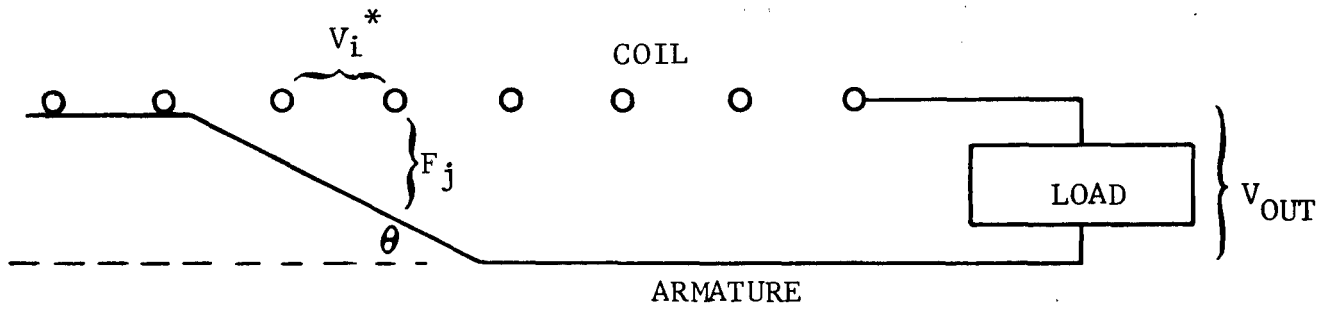

FIGURE 1A. CMF Device Voltages.

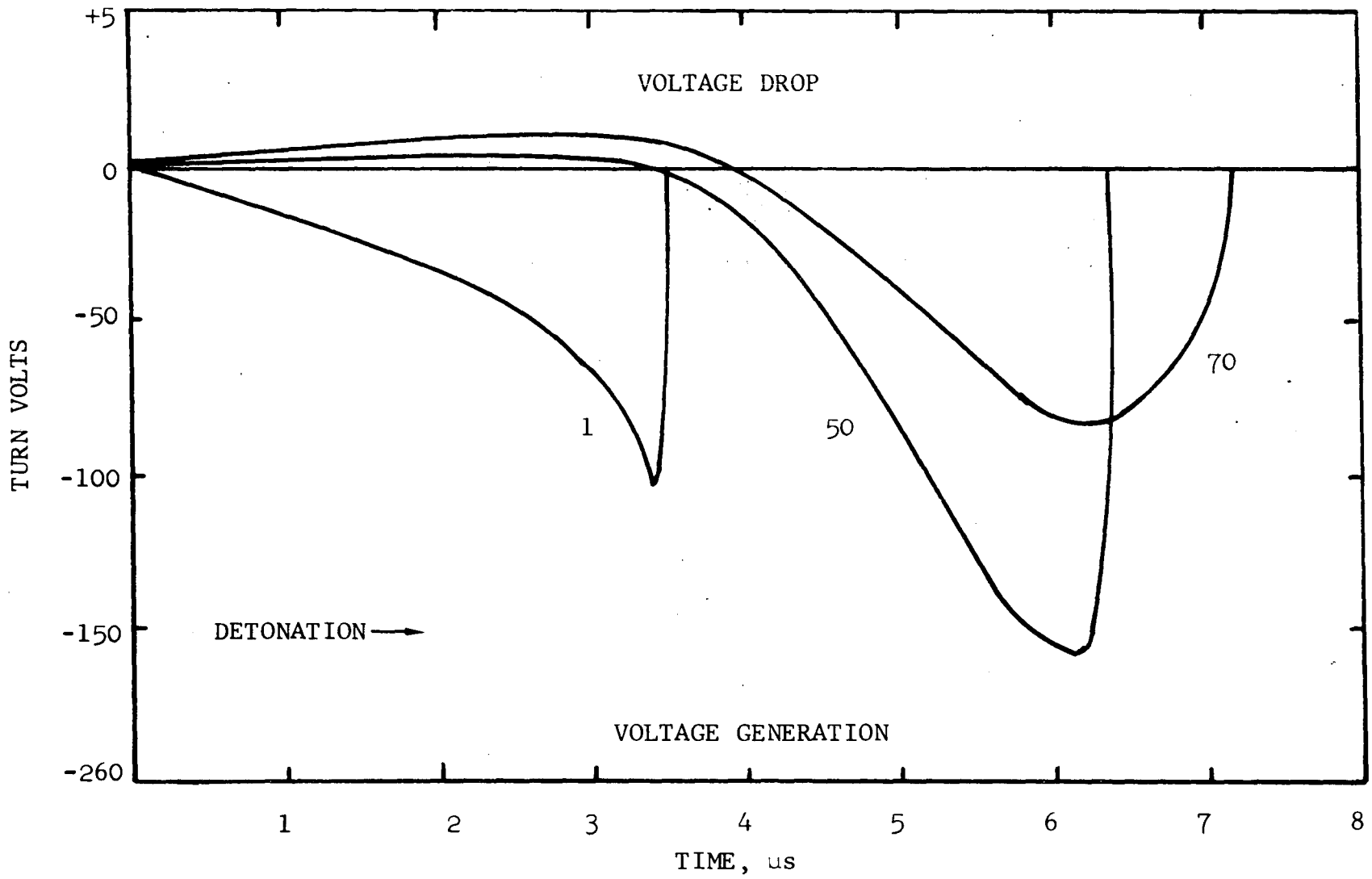

FIGURE 2A. Plot of turn voltage versus time for first (1), 50th (maximum voltage), and last (70th) turn of CMF Device as predicted by code SWL.

Distribution:

Los Alamos Scientific Laboratory
P. O. Box 1663
Los Alamos, New Mexico 87544
Attn: J. W. Conant, WX-7
W. A. Meyers, WX-7
R. L. Spaulding, WX-7

University of California
Lawrence Livermore Laboratory
P. O. Box 808
Livermore, California
Attn: R. H. Barlett
W. W. Hofer
R. K. Jackson
S. Sack
J. R. Stroud
R. C. Weingart

1116 R. P. Reed
1132 A. B. Church
1221 W. J. Halpin
1232 S. D. Spray
1340 T. B. Lane
2300 L. D. Smith
2310 C. B. McCampbell
2314 J. J. Marron
2315 J. E. Gover
2315 A. E. Binder
2315 W. I. Bower
2315 J. E. Leeman (20)
2316 H. M. Barnett
2510 D. H. Anderson
2513 D. B. Hayes
2515 E. A. Kjeldgaard
2516 N. E. Brown
2520 J. P. Shoup
2540 O. M. Stuetzer
4010 J. A. Mogford
4360 E. E. Ives
5000 A. Narath
5100 J. K. Galt
5110 F. L. Vook
5120 G. J. Simmons
5130 G. A. Samara
5131 L. W. Davison
5131 P. L. Stanton
5131 T. J. Tucker (20)
5132 P. M. Richards
5150 J. E. Schirber
Attn: R. T. Johnson - 5155
5160 W. Hermann
Attn: D. E. Munson - 5163
B. M. Butcher - 5167
5166 A. J. Chabai
5200 E. H. Beckner
5254 J. R. Freeman
5230 M. Cowan
5400 A. W. Snyder
5700 J. H. Scott
5718 M. M. Newsom
5800 R. S. Claassen
Attn: R. L. Schwoebel - 5820
8150 D. E. Gregson
8156 D. K. Dean
8166 J. S. Anderson
8185 C. M. Potthoff
8330 G. W. Anderson
8340 J. L. Wirth
9350 F. W. Neilson
8266 Library (2)
3151 W. L. Garner (3)
(Public Release)
3141 Central Tech. Files (5)
ERDA/TIC (25)
(3171-1 R. P. Campbell)