G. J. Janzen

2514

SAND75-0470

Unlimited Release

An Improved System for the Measurement of High-Voltage Pulses

William A. Stephenson

Prepared by Sandia Laboratories, Albuquerque, New Mexico 87115 and Livermore, California 94550 for the United States Energy Research and Development Administration under Contract AT (29-1) 789

Printed May 1976

Sandia Laboratories

SF 2900 Q(7-73)

Bldg. 905 Library
630

Issued by Sandia Laboratories
a prime contractor to the
U.S. Energy Research and Development Administration

NOTICE

This report was prepared as an account of work sponsored by the United States Government. Neither the United States nor the United States Energy Research and Development Administration, nor any of their employees, nor any of their contractors, subcontractors, or their employees, makes any warranty, express or implied, or assumes any legal liability or responsibility for the accuracy, completeness or usefulness of any information, apparatus, product or process disclosed, or represents that its use would not infringe privately owned rights.

Printed in the United States of America

Available from
National Technical Information Service
U. S. Department of Commerce
5285 Port Royal Road
Springfield, Virginia 22161
Price: Printed Copy $5.00, Microfiche $2.25

SAND75-0470

Unlimited Release

AN IMPROVED SYSTEM FOR THE MEASUREMENT OF HIGH-VOLTAGE PULSES

By

William A. Stephenson
Generator Development Division 2351
Sandia Laboratories, Albuquerque, New Mexico

Printed May 1976

ABSTRACT (U)

A small 71.8 mm x 127 mm (2.83" x 5") capacitive voltage divider is described that is used for measuring waveforms in the 200 kilovolt range with durations of tens of microseconds. The device, immersed in a dielectric fluid, works over the temperature range of 219 K to 347 K (-65 to +165°F). The divider works into an electronic impedance matching line driver which has selectable division ratios of 10,000, 20,000, 30,000, and works into a 50-ohm load. Total deviation in division ratio for the system is in the order of +1.5% to -1.05%.

TABLE OF CONTENTS

		Page
I	Introduction - - - - - - - - -	3
II	Requirements for Improvement- - - - - - - - -	5
III	Insulator Design - - - - - - - - -	7
IV	Temperature Characteristics - - - - - - - - -	12
V	Line Driver - - - - - - - - -	12
VI	The Voltage Divider System - - - - - - - - -	14
VII	Conclusions - - - - - - - - -	16
	Appendix - - - - - - - - -	17

AN IMPROVED SYSTEM FOR THE MEASUREMENT OF HIGH-VOLTAGE PULSES

I. INTRODUCTION

There is a continuing need to make high-voltage waveform measurements in the neutron generator development laboratory. A device is needed that will reduce by a precise ratio the amplitude of voltage pulses having a magnitude of several hundred thousand volts and a duration of up to 20 microseconds. A resistive voltage divider is unacceptable in this case because of

1) the circuit loading caused by distributed capacity,
2) the high resistance values and frequency compensation that are necessary when dealing with high impedance circuits, and
3) the excessive physical size of most reliable constant use dividers.

Through the years, many design configurations for voltage dividers have been used that utilize two capacitors to obtain voltage division. The principle is essentially the same as that of a resistive divider except that capacitive reactance is used to obtain the voltage drops. Advantages are that the device can be designed with very little circuit loading (in the order of 10 picofarads), the device works well with rapidly changing voltages, and it can be designed into a relatively small package if very high voltages are to be measured.

Some disadvantages and potential areas for error include poor low frequency response, electrostatic shielding from nearby objects, internal corona, changes in dielectric nearby and inside the divider, and temperature

effects on the divider dielectric. Some background information on the evolution of these devices can be found in SCDR-72-0065. The design shown in Figure 1 (Design A) is a direct result of the effort described in that report.

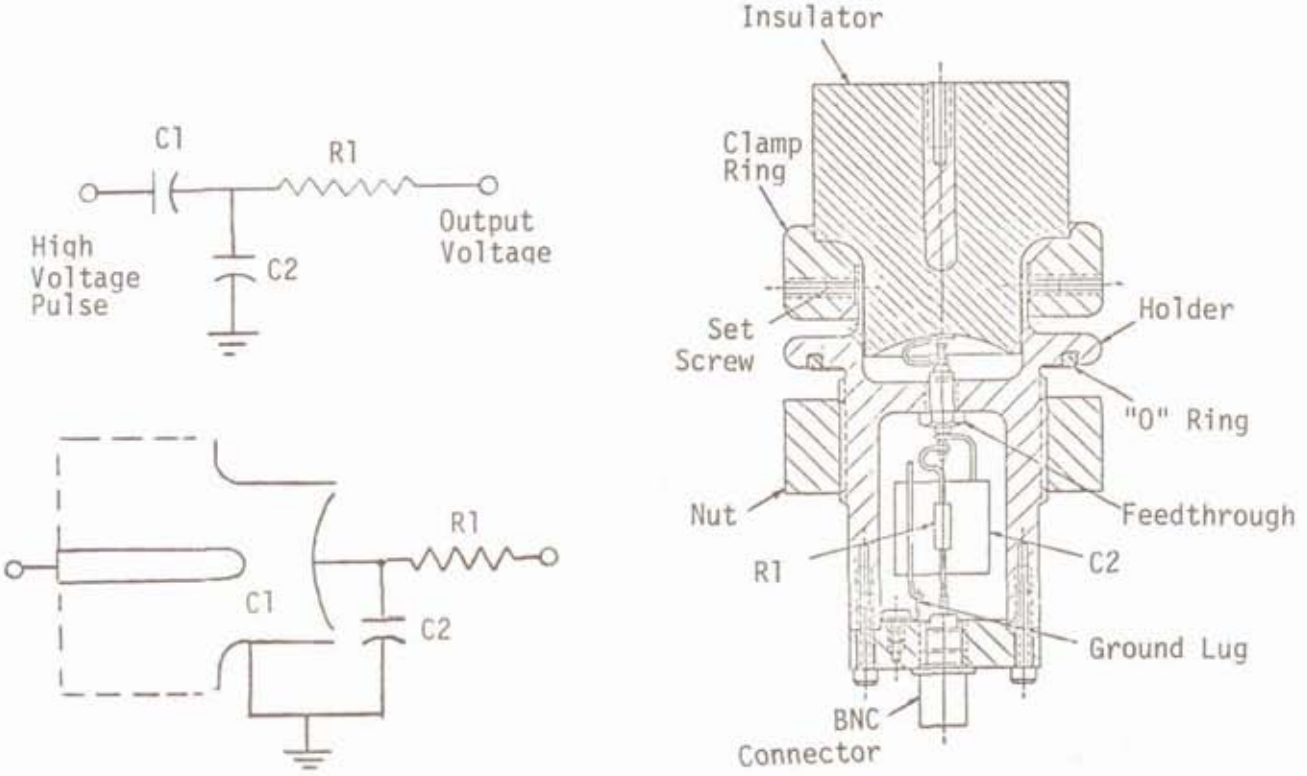

Figure 1 - Capacitive Voltage Divider (Design A)

The high-voltage capacitor, C1, is formed by the center rod in the ceramic insulator and the concave surface opposite the end of the rod. This concave surface is coated with flame-sprayed metal (zinc) as is the area enclosed by the holder and clamp ring. The concave surface is isolated electrically and is connected via the feedthrough to C2 and R1. The voltage division ratio is determined by the relative capacitance of C1 and C2, i.e., low capacity = high voltage and high capacity = low voltage. The ground plane around the concave surface shields C1 from nearby objects, flame spraying metal directly onto the insulator eliminates corona caused by air gaps in the high-voltage stress area, and the ceramic dielectric is relatively stable

over the temperature range of interest. Since the device must be operated into a high impedance load, R1 serves to terminate the signal output line at its source. The physical dimensions of the device are 133 mm long by 63.5 mm in diameter.

Due to the voltages involved, the divider must be operated in a dielectric fluid to prevent voltage breakdowns such as would occur if operated in air. The device can be mounted in the wall of a test tank using the "O" ring to seal the hole and the mounting nut to secure it in place, or it can be completely submerged in the dielectric medium. It is immaterial whether or not fluid enters at the rear of the insulator or the cavity where C2 and R1 are located.

This device (Design A), as shown in Figure 1, is the starting point for the effort described in this report. Requirements for a new design are derived from a comparison of the shortcomings of the present divider and what might be achievable. Details of the design of the insulator are discussed as the limiting feature of the capability of the divider. One of the features deemed desirable was isolation from the output load. This was accomplished by designing a line driver. The features of the line driver and the availability of a complete voltage divider system are described. Design, test, and calibration data are included in the appendix.

II. REQUIREMENTS FOR IMPROVEMENT

Design A was adequate for use during the neutron generator development program for which it was primarily designed. It eliminated or greatly reduced the potential error areas of previous designs and was the first unit that could be utilized over an extended temperature range. There was still room for improvement, however.

Voltage Capability

Attempts to use this design in the area of 200 kilovolts resulted in several units being destroyed by internal breakdowns.

Impedance Matching

Waveform digitizers were replacing the oscilloscopes used for

these measurements and the digitizers had a 50-ohm input impedance. The capacitive divider requires a high impedance load in order to avoid drooping waveforms (poor low frequency response).

Division Ratio

An oscilloscope can accept a variety of amplitudes of signal from a fixed division ratio device. The digital instrumentation would only accept data within voltage limits which represent a given number of vertical increments. To achieve maximum accuracy with the digitizers, therefore, it was desirable to utilize a maximum amount of the "voltage window" and thus a waveform that could be adjusted to fit the window would be desirable. In addition, the digitizers were limited to a 10-volt maximum waveform and normal operation frequently exceeds this amount.

Temperature Compensation

Accuracy without conditions or human interpretation is always a desirable goal, and the slope of the temperature versus division ratio for Design A was still several percent (Appendix, page 18) over the temperature range of interest. Temperature compensation could eliminate any need for correction factors.

Load Capacity

Another item was the requirement that only a cable of known length could be used with Design A since the cable capacity appears in parallel with C2 and variations in length would cause corresponding variations in division ratio.

Calibration

One other thing that could be classed as a nuisance was the difficulty in changing the low-voltage capacitor, C2, to the proper value during calibration. When utilizing instruments that display data as units/division (this includes oscilloscopes which will continue to be used), it is most convenient to deal with data in easily devisable increments.

Division ratios that are in powers of 10 or integers times powers of ten are much easier to handle. Therefore, if the capacitor, C2, can

be adjusted for ratios of 5000, 10,000, 20,000, etc, the divider is more convenient to use. Soldering in fixed values of capacity to obtain a desired division ration on a unit that has to first be removed from a test tank is slow and tedious. Variable capacitors are not considered acceptable from a reliability standpoint.

Requirements

Requirements for improvement can thus be listed as follows:

1. Increase the voltage holdoff to over 200 kV.
2. Improve the temperature versus division ratio characteristics.
3. The divider must work into a 50-ohm load.
4. The output signal should be adjustable in amplitude.
5. The divider should be isolated from its load capacity.
6. The method of calibration should be made more convenient.

III. INSULATOR DESIGN

The breakdown experience showed that a change was required in the voltage holdoff of the high-voltage portion of the divider (Insulator, Figure 1). Breakdowns occurred from the tip of the center electrode to the pickup plate (concave area) or to the ground plane at about 190 kV. One insulator of a previous design made of alumina-filled epoxy (cast with the center rod in place) withstood repeated 220 kV pulses without breaking down, but this type of dielectric has poor temperature characteristics (see Appendix, page 18).

The physical dimensions of the insulator were scaled up in a ratio of 190 kV to a desired 250 kV (about 1.3) and five new ceramic units were made. The outer surfaces on four units were flame sprayed--three with aluminum and one with nickel aluminide. The coating variations were made in an effort to improve on the zinc coating used on previous designs. The fifth unit was given to the Sandia Physical Electronics shop so that the electrode hole could be metallized with a molybdenum manganese slurry. This process was attempted to provide a capability to replace the center rod with a plated hole. This unit was then flame sprayed with aluminum for an exterior coating.

The nickel aluminide showed poor adhesion. The nickel aluminide was then removed and the unit was re-sprayed with aluminum. The unit with the metallized electrode hole broke down at about 230 kV. Postmortem showed an incomplete coating of the hole surface. The Physical Electronics personnel reported that an even coating inside the 6.35 mm (0.25 inch) diameter hole was difficult to achieve. Further investigation showed various degrees of wicking of the metallizing material into the ceramic which had the potential of changing the electrode shape. These two areas were not investigated further.

The flame-sprayed aluminum adhered well; and according to the Sandia Development Lab, it was a simpler process than the zinc. This coating was used on all subsequent units. Note that the flame-sprayed aluminum is on the outside of the insulator. The center electrode is a brass rod placed in the hole in the ceramic using conductive silver epoxy to hold the rod in place. The hole is swabbed thoroughly with the epoxy before inserting the rod. In this way, air gaps between the rod and the hole have no effect on operation. The epoxy is in direct contact with the ceramic and serves as the high-voltage electrode surface. Air gaps in the high-voltage stress area, anywhere between the center rod and ground, cause noise, change in amplitude, and may precipitate breakdown of the insulator.

Of the three aluminum-covered units, one was pulsed 20 - 25 times in the 240 - 250 kV region with no ill effects but broke down several weeks later at 160 kV after a 110 kV pulse. A second unit broke at 240 kV after enduring a 260 kV pulse. The third unit was not tested. The nickel aluminide unit (recoated with aluminum) broke at 230 kV after repeated pulsing.

Postmortems (sectioning with a lapidary saw) on the broken units indicated that the electrode holes were not smooth at the blind end and the conductive epoxy was assuming the shape of the tool marks left when the hole was made.

To circumvent this problem, the fabrication process was changed. The method used up to this point involved machining a block of unfired ceramic material held together with a binder. After machining, the material was oven fired. The binder was driven off and the material shrank to its final

shape. Since a smooth machining job on the bottom of the electrode hole was difficult to obtain due to chips, etc., an electrode mandrel was fabricated and the ceramic material in powder form (Wessco A1-500) with a binder was isostatically pressed at 1.24×10^8 Pa (18,000 psi) around the mandrel. The mandrel was then withdrawn leaving a smooth hole. The outer configuration was then machined from the billet. The unit was fired to solidify the material as was done previously. Five units were made by the Sandia shops in this manner.

The five ceramic insulators with the pressed electrode hole were then pulsed repeatedly at 240 kV. One of the five broke on the fourth pulse. Another unit was sent to Standards, Division 9532, for calibration and testing. It was pulsed repeatedly at slightly over 200 kV. The unit was then returned and was used for routine laboratory testing for several months. At the end of this time, a test series discussed later in this report took the unit to destruction at over 244 kV. On this test and on some of the previous breakdowns, a slight perturbation was noted on the waveforms of the operation just prior to the final breakdown pulse. This was probably the case for units 2 and 3 (Figure 2). A third unit was inadvertently destroyed when the high-voltage pulser malfunctioned. It is not included in Figure 2.

Unit No.	Description	Breakdown Voltage (kV)
1	Previous Units (Figure 1)	190
	Machined Hole Units	
2	Unit A	160 (after 240-250 kV)
3	Unit B	240 (after 260 kV)
4	Unit C	230
5	Metallized Hole Unit	230
	Pressed Hole Units (Batch #1)	
6	Unit A	240
7	Unit B	244
	Pressed Hole Units (Batch #2)	
8	Unit A (both units were pulsed over 50 times at 240 kV)	Unknown
9	Unit B	

Figure 2 - Voltage Holdoff Summary

It is acknowledged that there is not enough data here to prove the necessity for the electrode pressing operation. It should be realized, however, that the machinist making the parts was the same in all cases and had developed some expertise in working with the unfired ceramic. He acknowledged the difficulty in obtaining a smooth electrode hole by machining methods. It would seem to be good practice to eliminate a skilled operation where possible and the variables associated with machining this hole. It is notable also that an alumina-filled epoxy version of Design A evidently sidesteps these problems by casting the epoxy around the polished center electrode which then becomes part of the finished unit.

The mechanics of high-voltage breakdowns in materials is a science that is not within the scope of this report. Observations were made and conclusions drawn that were adequate to give confidence in the capability of the device described here. Conclusive evidence of the exact voltage capability of the insulator would require breaking down many expensive items and serve no useful purpose insofar as the original design objective is concerned. Experience in this area also indicates that there is no exact voltage capability but rather a range in which breakdowns are likely to occur. Items such as rate of voltage rise, duty cycle, and pulse shape are factors which will affect the range.

Subsequent use of this design has shown that it will meet a 200 kV requirement with reliability. It will probably be acceptable in the range of 220 kV. Breakdowns can be expected over 240 kV.

In addition to the breakdown tests, Electrical Standards, Division 9532, ran numerous tests on the divider. One test series (Appendix, page 19) plots the division ratio versus voltage amplitude from about 30 kV to over 200 kV. Also plotted is FC77* Electronic fluid versus FC40* fluid and fluid that Division 9532 had on hand versus fluid supplied by Division 2351. The total deviation in divider ratio with all of these variables was 0.8% from highest to lowest.

---

*Fluorinert Electronic Fluid
Minnesota Mining and Manufacturing Company
St. Paul, Minnesota 55119

The holder for the insulator was modified as appropriate. Figure 3 shows the external appearance of the designs. The low-voltage capacitor area was shortened on the final design resulting in a unit 6.35 mm (.25 inch) shorter than the original, about 127 mm (5 inches) overall length, and an increase in overall diameter from 63.5 mm to 71.8 mm (2.5 inches to 2.83 inches). Lock washers are specified to hold the component parts together since aluminum has an oxidation problem and good conductivity is desirable. The final assembly is shown in the Appendix, page 20.

Design B

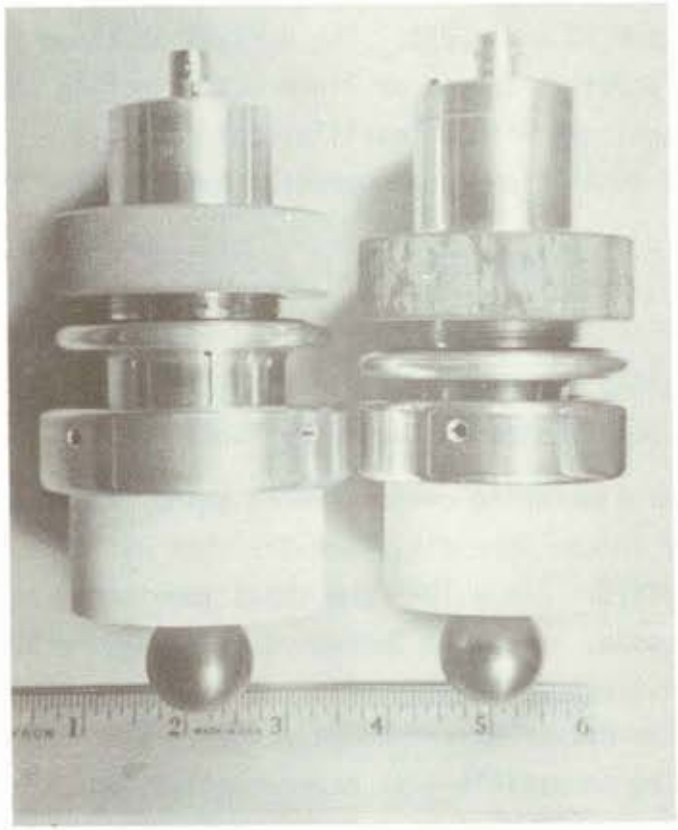

Design A

Figure 3 - Physical Differences in Previous (Design A) and New (Design B) Dividers

See Appendix, page 21, for some additional notes on insulator design and test techniques.

IV. TEMPERATURE CHARACTERISTICS

The temperature characteristics of Design B were verified to be about the same as Design A. Using a mica low-voltage capacitor for C2 (Figure 1) listed as having a temperature coefficient of zero to ±100 ppm, the deviation in ratio is shown to be about +1.8% to -.7% (Figure A-6, page 25 in the Appendix). With a zero to +77 ppm mica capacitor, the change is about +1% to -.5%. Using a Corning glass capacitor with a +140 ppm coefficient for simple temperature compensation, the deviation over the temperature range was reduced to +.1% and -.25%. The variations shown in Figure A-6 should probably be smoother curves or lines but detecting accurate percentages of this magnitude with an oscilloscope requires very special care to obtain even this resolution (see Appendix, page 21, for test techniques).

V. LINE DRIVER

Impedance matching the voltage divider to a 50-ohm load was accomplished by the use of a semiconductor operational amplifier.

Several impedance matching circuits were tried with the final result shown schematically in the Appendix, page 23. The National Semiconductor LH0063CK buffer amplifier has a 10^{11} ohm input impedance, a rise time of about three nanoseconds, an output impedance of about one ohm, and it will drive a 55-ohm load linearly to ±10 volts. The gain is about .98. It was decided that the line driver described here should have about a megohm input impedance to be compatible with other applications where simulation of an oscilloscope input is desired. An unterminated input will allow a drift in dc level to the extreme end of output voltage capability. The step attenuator shown in the schematic has about a megohm total resistance and the 10^{11} ohms of the amplifier allows direct coupling across the divider resistors without impedance problems. The attenuator provides a convenient means of changing divider division ratios that was not available previously. In this application, the ratios are 1, 2, 3, or 1, 2, 2.5 with high frequency compensation provided by C3, C4, and C5. R6 is a non-inductive variable resistor used to reduce the gain to a standard arbitrary

value (.9) so that line drivers may be interchanged if necessary. R5 is for dc offset compensation at the output, and R4 is used to damp any tendency of the unit to oscillate. C6 and C7 are decoupling capacitors.

One of the problems of capacitive divider ratio adjustment may be solved by the use of C1 and C2 as shown on the schematic. A standard length of cable, in this case 1.52 meters (5 feet) of RG142 B/U with teflon dielectric for high temperature capability, is used to couple the divider to the line driver. A value that is less than that required for a ratio of 10:000:1 is used in the divider itself for the low-voltage capacitor. C1 is then switched in and adjusted for the desired ratio. After adjustment, C1 is measured and a fixed mica capacitor with as nearly the same value as is practical is connected to terminals A and B. S1 is then left in the C2 position for normal operation. The open position on S1 is used when testing the line driver where no additional input capacitance is desired.

An alternative technique for calibration calls for paralleling R6 with a 3.3-ohm fixed resistor for a variable 3.3-ohm resistance. The gain is then variable from 0.9 to about 0.98. This limits the input voltage to 11 volts for 10 volts output (maximum rating). Using this method, no capacitor is necessary for C2 and no switch for S1. The capacity is all in the divider housing, and the system gain (R6) is adjusted for the final division ratio instead of using C1. When this method is used, line drivers cannot be interchanged between dividers without recalibration. A small disadvantage.

The circuit can be assembled on a printed circuit board.* It can be floated or grounded. Best results were obtained using non-floating BNC connectors, with the circuit common connected to the box, and with the amplifier case connected to the box. All of these items, along with R4, may be necessary to eliminate any tendency to oscillate on rapid voltage transitions. The assembled unit is shown in the Appendix, page 24.

---

*Items discussed in this report are subject to continuous redesign. If duplication of circuits or hardware is desired, please contact the author for the latest version.

VI. THE VOLTAGE DIVIDER SYSTEM

The assembled system, Figure 4, was tested using a resistive divider as a comparison standard (see Appendix, page 21). Input voltage versus division ratio tests were run using Biomation 8100 waveform digitizers as the measurement instruments and letting a PDP 11 computer calibrate each

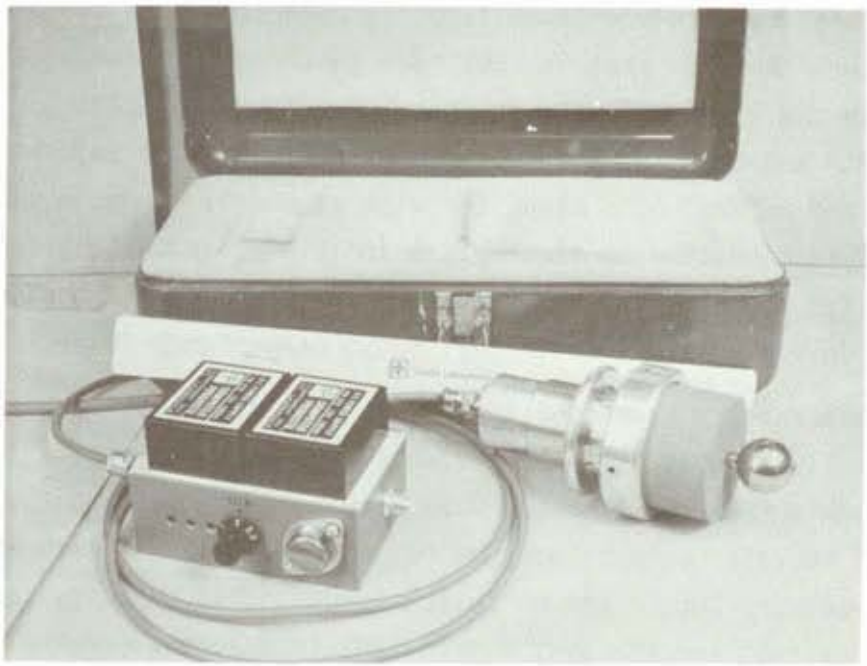

Figure 4 - Voltage Divider and Line Driver

digitizer just prior to each operation, measure each voltage, compare them, and calculate division ratio on the capacitive voltage divider. The range of about 25 kV to about 244 kV required switching ranges on the line driver and, in some cases, on the digitizers. The data were normalized (i.e., X2 divided by 2, X3 divided by 3) and plotted in Figure A-7, page 26, in the Appendix. Exact ratios on the line driver attenuator were approximations due to making up the divider resistors from combinations of standard values. With all of these variables, the deviation was still only +1.4% to -.8%. The notch in the 50 kV region is also apparent on the data from standards and is unexplained.

The system described here will measure high-voltage pulses up to 200 kV and probably 225 kV with reliability and with an absolute accuracy that is determined by Sandia Standards at the time of certification. This is generally specified at ±6% at the present time. The change in division ratio due to all variables including temperature, range changing, and input voltage on the single unit tested, was +1.5% to -1.05%. If a large number of units were tested, the percentage would undoubtably increase somewhat and long-term stability could possibly have some effect. Another factor mentioned previously is that the unit must be operated with at least the high voltage portion submerged in a dielectric fluid. Different fluids will cause a slightly different division ratio although this effect is minimized due to the physical layout of the low-voltage side of C1 (Figure 1) which is surrounded by a ground plane. The unit should, however, be certified with the fluid expected to be used.

Since the gain of the line driver depends upon working into 50 ohms, high quality 50-ohm terminators (such as sold by Tektronix Inc.) should be used at the end of the signal line when high impedance instruments (oscilloscopes) are used. These terminations are also provided in various attenuation values such as 2X, 2.5X, 5X, and 10X which can add even more versatility to the system. Fifty ohm instruments should be checked to insure that the input impedance is correct.

Since the load resistance is at the end of a 50-ohm cable, it is recommended that low loss cable (RG213, RG214) be used; and for long runs, the cable attenuation be checked and compensated for at the measurement end (normal practice for any 50 ohm measurement).

The five-foot teflon cable may be varied in length up to several hundred feet as long as it is calibrated as part of the divider system. Five feet was chosen as a convenient length to allow the divider to be placed inside a temperature chamber without subjecting the line driver to the temperature extremes. While the operational amplifier is specified to have an operating range of 248 K to 358 K, it is intended to operate only at room ambient temperature.

The input capacity of Design B divider measured essentially the same as Design A, about 9 picofarads.

Waveform droop was undetectable during the 20 microsecond period of interest (RC time $\approx 5 \times 10^{-3}$ seconds).

VII. CONCLUSIONS

The voltage holdoff capability of the divider has been raised to over 200 kV.

The system works into a 50-ohm load with a variable division ratio that allows greater versatility. Its output voltage is limited to ±10 volts. Temperature effects on the divider over the range of 219 K to 347 K can be disregarded. The device is independent of cable length (the same circuit is being used to drive about 1.6 km of cable for field testing).

Final calibration of the system is accomplished by a simple screwdriver adjustment.

Circuit loading effect of the divider is about nine picofarads.

Waveform droop is undetectable during the time of interest.

The deviation from a nominal division ratio for the system tested was +1.5% to -1.05%. Duplicate systems can be expected to have the same characteristics.

APPENDIX

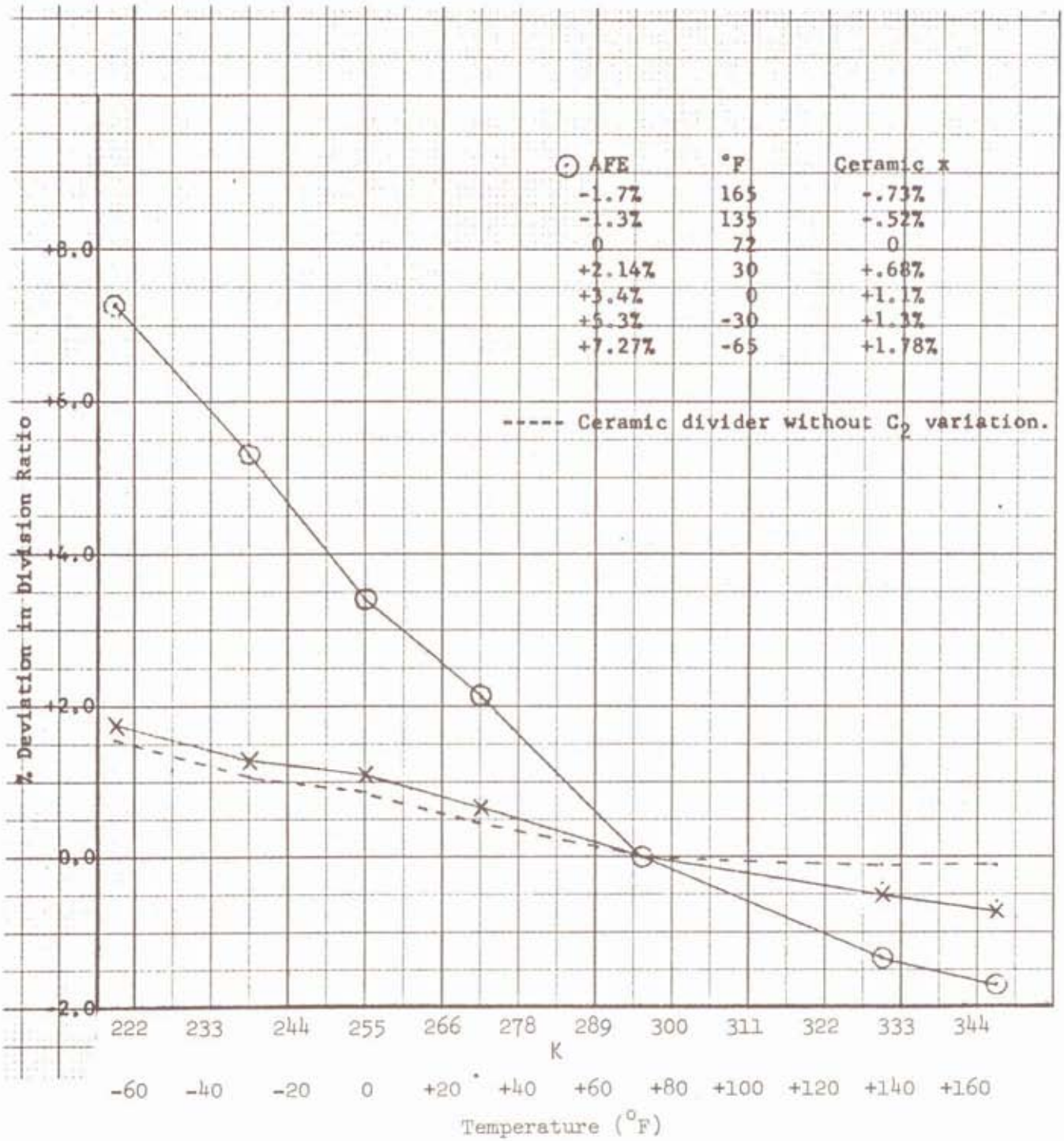

Change in division ratio versus temperature showing characteristics of alumina-filled epoxy (AFE) unit and ceramic unit shown in Figure 1.

Figure A-1

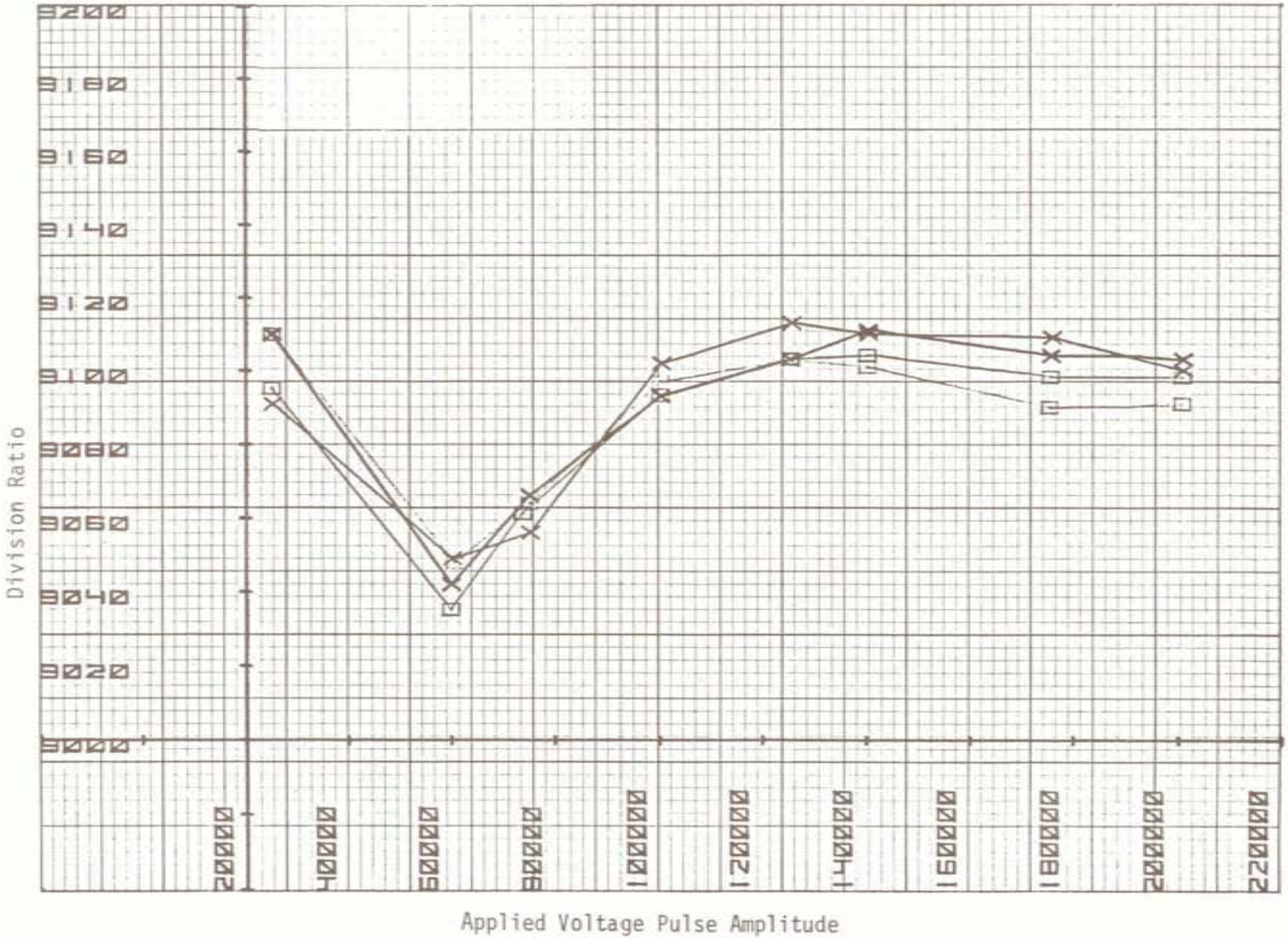
Division Ratio
9200
9180
9160
9140
9120
9100
9080
9060
9040
9020
9000
20000
40000
60000
80000
100000
120000
140000
160000
180000
200000
220000
Applied Voltage Pulse Amplitude

Figure A-2

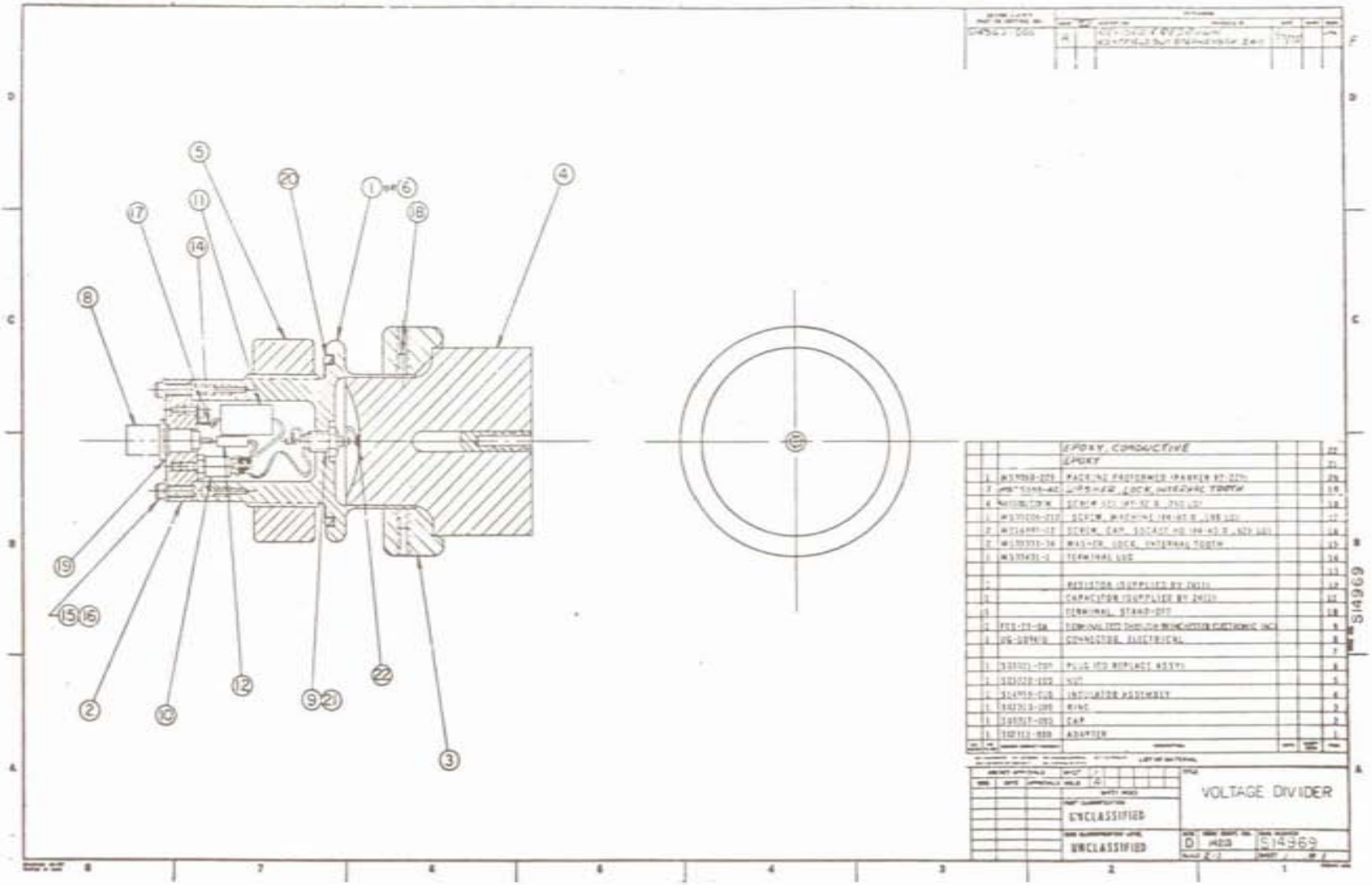
EPOXY, CONDUCTIVE
EPOXY
VOLTAGE DIVIDER
UNCLASSIFIED
UNCLASSIFIED
D
514969

Figure A-3

Insulator Fabrication

It has been several years since the first batch of Design B insulators were fabricated. A fourth group is being fabricated at this time. Experience has shown that the yield on good ceramics is only 80% of those delivered. The pressing, machining, and firing operations all seem to have fallouts for one reason or another, so it is necessary to request a greater number than are required. Rejects of completed units are generally based on irregularities in the center electrode hole.

Another item is the flame-sprayed aluminum on the exterior of the unit. The adhesion is not always good. These units can be returned to the shop for rework, however; and on the second pass, are normally acceptable. Evidently, process control is a problem. Aluminum is still being used; but from a performance standpoint, it has no known advantage over a zinc coating.

Test Techniques

Absolute values of voltage were not of concern in testing the capacity voltage divider. What was important was to have a comparison measurement that is unchanging and reasonably accurate. Voltage pulses were obtained from a pulse transformer and comparison voltages were measured with a specially designed 93 K-ohm, bifilar-wound, high-voltage resistor about 380 mm (15 inches) long by 63.5 mm (2.5 inches) in diameter and a small Dale wire-wound, non-inductive, low-voltage resistor. Any change in resistance of this combination over the temperature range of interest was undetectable with a General Radio model 1608A impedance bridge. The transformer, resistive divider, and capacitive divider were mounted in a 304.8 x 475.2 x 304.8 mm (12 x 18 x 12 inches) test tank and immersed in FC77 fluid for cold tests and FC40 fluid for ambient and hot tests. This apparatus was placed in a temperature chamber with appropriate cables attached to instrumentation located just outside the chamber.

The breakdown tests were simply conducted by looking at the outputs of the capacitive and reference divider on two beams of a Tektronix Type 556

oscilloscope on scales of 50 kV/division and 2 μs to 5 μs/division. Plug-in units were either Type 1A1 or Type W. Measurements were not attempted until after an hour's warmup and calibration at least daily with a Nanofast P-50 calibrated pulse voltage source.

Changes in division ratio, due to temperature, used the same apparatus with Type W plug-in units so that the baseline of the traces could be precisely offset and just the peak of the waveform observed. The vertical sensitivity of the oscilloscope can then be increased so that small changes in amplitude are more easily detected. A 20-volt signal was thus observed with a .1 volt/division sensitivity which is equal to .5% per division. Precise offsets were checked with the P-50 immediately prior to each measurement, and all comparisons were made on the same individual pulse. Temperatures in the fluid were monitored with a Leeds and Northrup thermocouple bridge, Catalog No. 8693. Constant stirring was necessary to insure that the divider temperature was the same as the fluid temperature.

The tests of the complete system (divider and line driver) were done with the same pulse apparatus but Biomation 8100 waveform digitizers and a PDP11 computer were used for amplitude measurement. The system used provided a precision dc voltage to the instruments for calibration just seconds before a measurement was made. A computer program stored the calibration factor for each digitizer and applied it to each waveform measured. One digitizer was used to record the resistive divider peak voltage (using a special peak 3 point averaging program); a second digitizer recorded the capacitive divider waveform peak. Using a constant value for the division ratio of the resistive divider, the program then compared the two peak values, calculated the capacitive divider division ratio, and output it numerically on the teletype. The digitizers are 8-bit machines capable of 256 vertical increments. The measurements were made so as to use at least 200 increments for each waveform thus providing one out of 200 or .5% resolution.

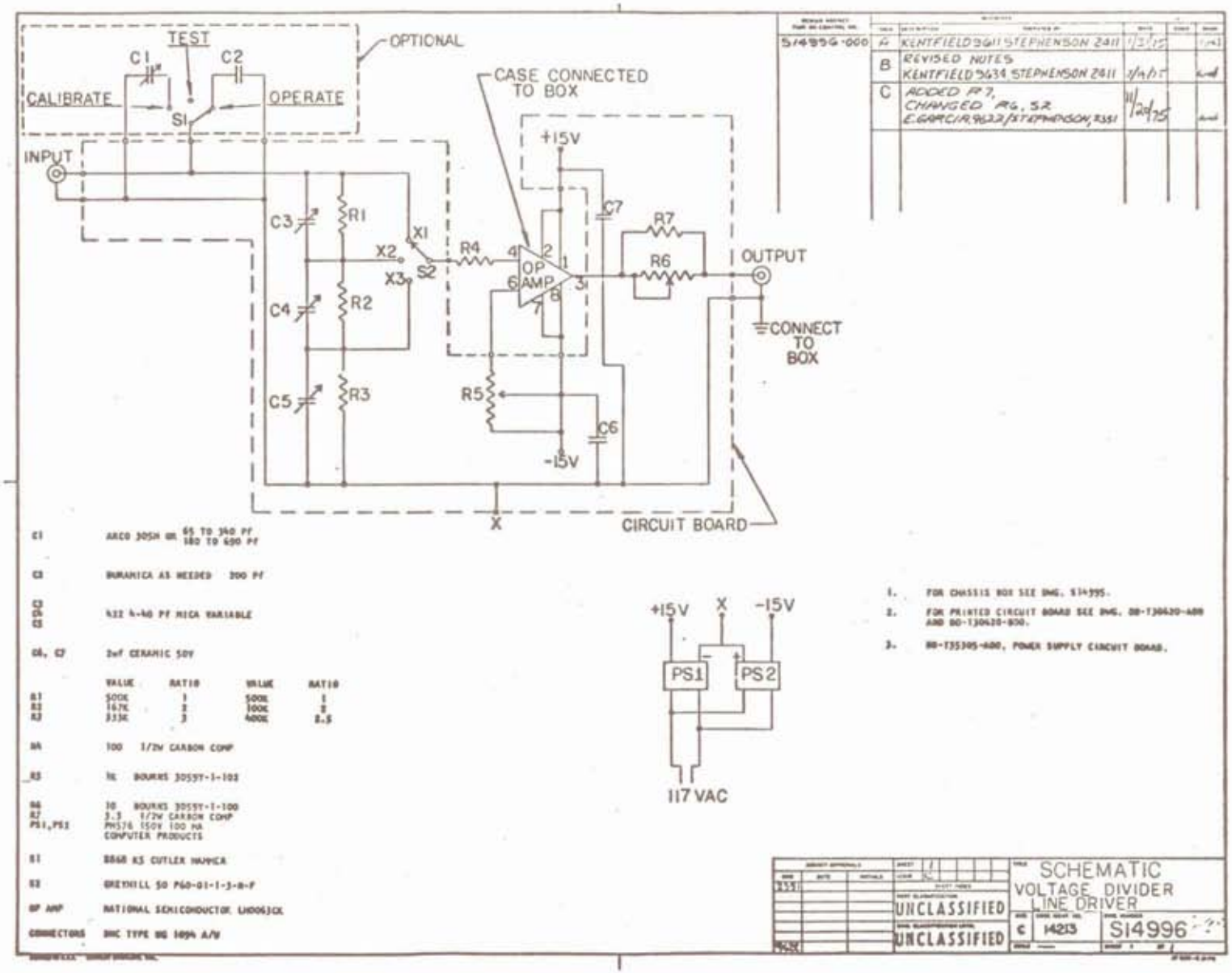
TEST
C1
C2
OPTIONAL
CALIBRATE
OPERATE
S1
CASE CONNECTED TO BOX
+15V
INPUT
C3
R1
X1
X2
X3
S2
R4
OP AMP
C7
R7
R6
OUTPUT
CONNECT TO BOX
C4
R2
C5
R3
R5
C6
-15V
X
CIRCUIT BOARD
+15V
X
-15V
PS1
PS2
117 VAC
SCHEMATIC
VOLTAGE DIVIDER
LINE DRIVER
UNCLASSIFIED
UNCLASSIFIED
S14996

Figure A-4

Top view showing attenuator switch, OP amp, and holes for adjusting compensation capacitors.

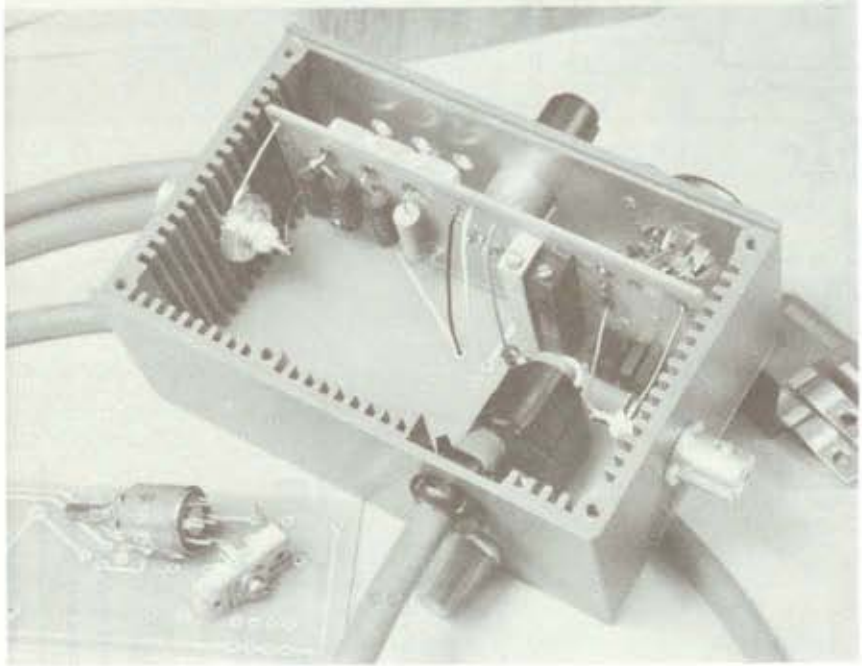

Bottom view with panel removed. R5 and R6 mounted on board near right side. This version has an AC switch and power indicator light.

Figure A5 - Line Driver Assembly

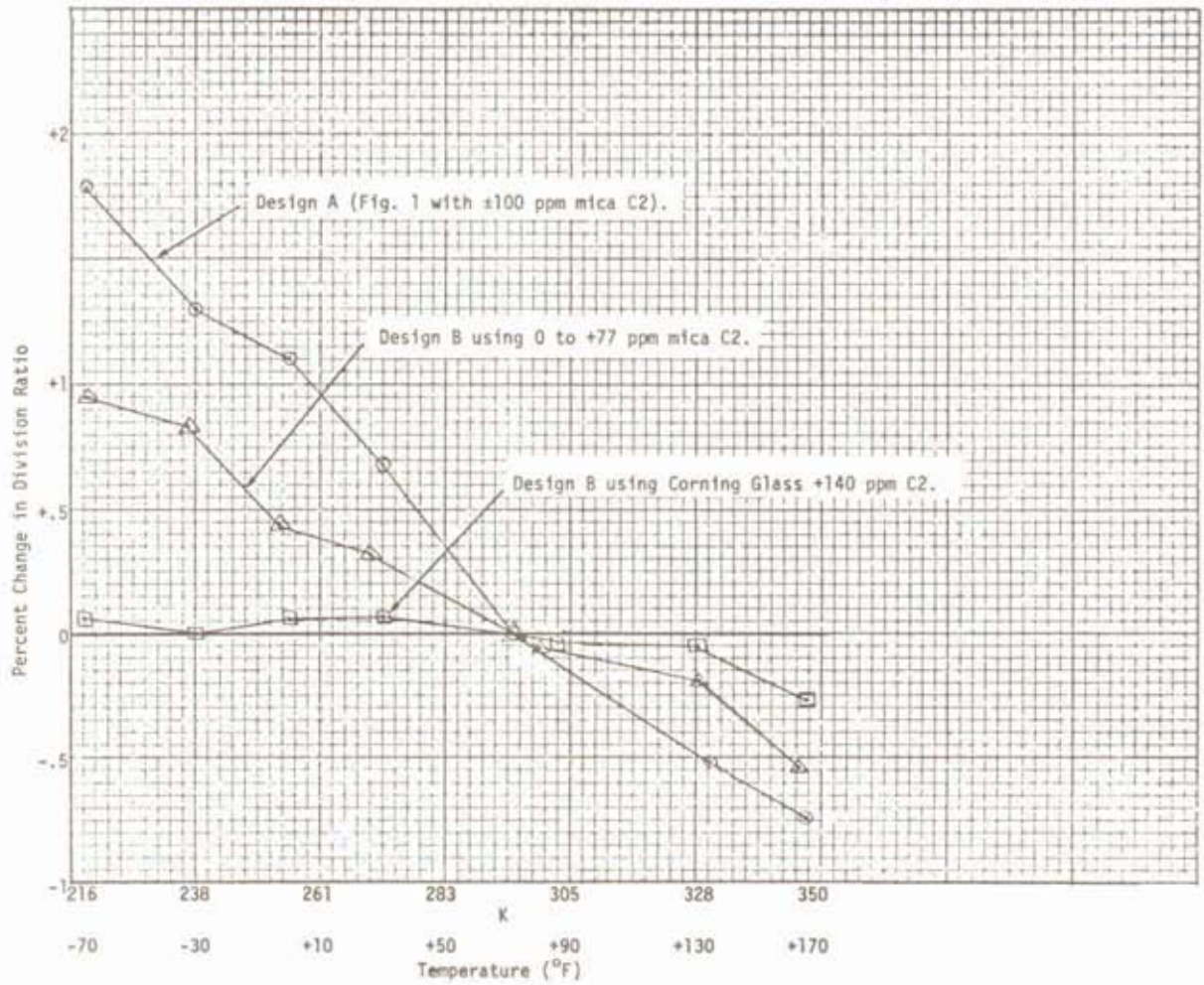

Figure A-6 - Temperature Versus Division Ratio

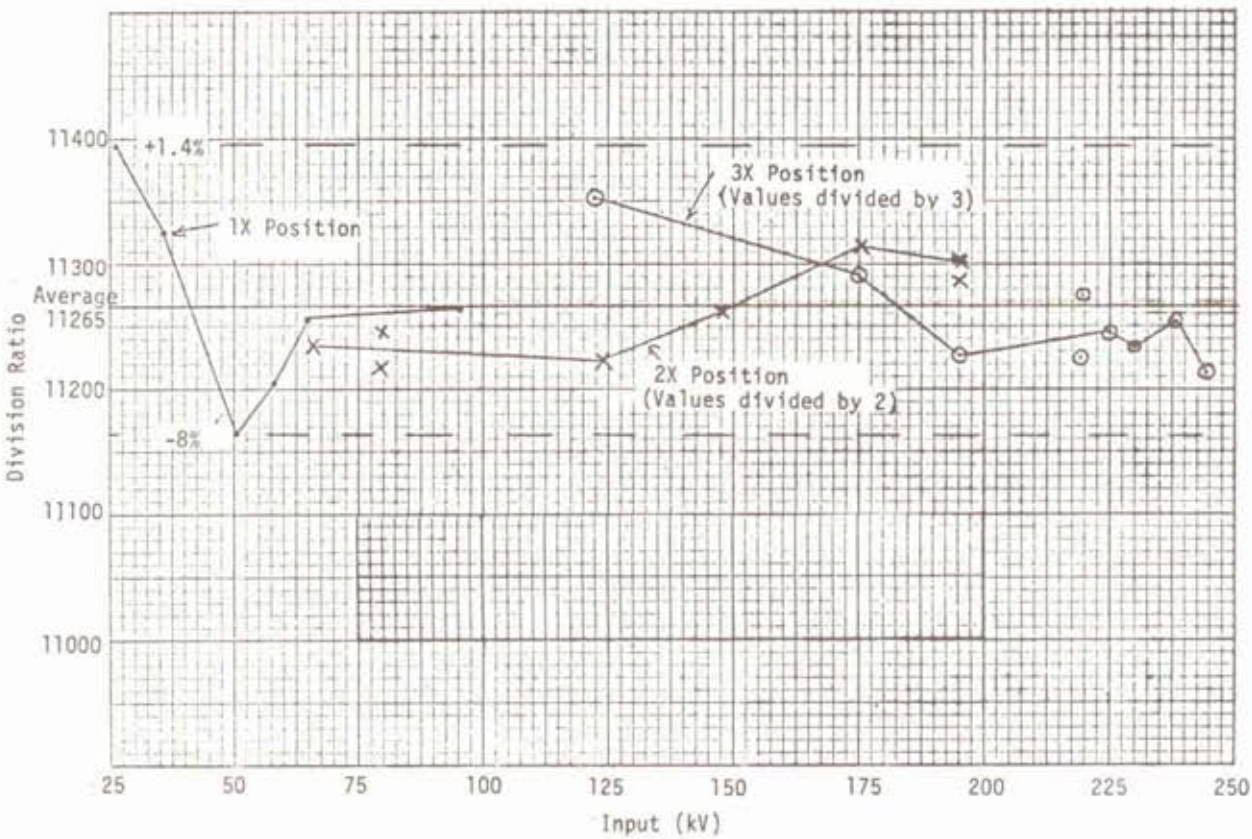

Figure A-7 - Voltage Divider and Line Driver Division Ratio vs Input Voltage

NOTE: All points are plotted. Some variation in either division ratio or measurement capability is indicated where several values are given for a single voltage. These are all less than .5%, however, which is about the resolution of the waveform digitizers.

Copy to:

General Electric Company (3)
Neutron Devices Department
P. O. Box 11508
St. Petersburg, Florida 33733
Attn: M. W. Osborn
A. D. Bentley
W. R. Chamberlain

2312 K. D. Hardin
2314 J. J. Marron
2315 J. E. Grover
2350 J. C. Crawford
2351 R. C. Dougherty
2351 W. A. Stephenson
2352 G. W. McClure
2353 W. G. Perkins
2354 B. E. Barnaby
2355 H. M. Bivens
2510 D. H. Anderson
2514 G. J. Janser
2514 A. P. Montoya
5718 G. L. Harvey
9515 J. T. Hillman
9532 S. R. Booker
8266 E. A. Aas (2)
3141 C. A. Pepmueller (Actg) (5)
3151 W. L. Garner (3)
For ERDA/TIC (Unlimited Release)
ERDA/TIC (25)
(R. P. Campbell, 3171-1)