SAND75-0466
Unlimited Release

TECHNIQUE FOR SPUTTERING TRANSPARENT CdS AND CdZnS PHOTOCONDUCTIVE FILMS

J. B. Snelling

Prepared by Sandia Laboratories, Albuquerque, New Mexico 87115 and Livermore, California 94550 for the United States Atomic Energy Commission under Contract AT (29-1)-789

Printed August 1975

Sandia Laboratories

SF 2900 Q(7-73)

When printing a copy of any digitized SAND Report, you are required to update the markings to current standards.

Issued by Sandia Laboratories, operated for the United States Energy Research and Development Administration by Sandia Corporation.

NOTICE

This report was prepared as an account of work sponsored by the United States Government. Neither the United States nor the United States Energy Research and Development Administration, nor any of their employees, nor any of their contractors, subcontractors, or their employees, makes any warranty, express or implied, or assumes any legal liability or responsibility for the accuracy, completeness or usefulness of any information, apparatus, product or process disclosed, or represents that its use would not infringe privately owned rights.

Printed in the United States of America

Available from
National Technical Information Service
U. S. Department of Commerce
5285 Port Royal Road
Springfield, Virginia 22151
Price: Printed Copy $4.00; Microfiche $2.25

SAND75-0466
Unlimited Release

August 1975

TECHNIQUE FOR SPUTTERING TRANSPARENT CdS AND CdZnS PHOTOCONDUCTIVE FILMS

J. B. Snelling
Solid State Electronics Division, 5133
Sandia Laboratories,
Albuquerque, NM 87115

ABSTRACT

A method of RF sputtering high quality cadmium sulfide and cadmium-zinc sulfide photoconductive thick films has been developed. The light/dark film resistivity typically differs by 6 orders of magnitude. Films are very transparent, adhere well to a variety of optically polished substrates and do not require the usual post-deposition anneal to obtain high dark resistivity.

ACKNOWLEDGMENT

The author wishes to express his deep appreciation to Dr. David B. Fraser of Bell Telephone Laboratories who provided considerable technical information necessary for the successful completion of this project. I also wish to thank Willis Smith, Cecil Land, and Don Schueler of Sandia Laboratories for their support and helpful suggestions. The Sandia Laboratory shop personnel in Organization 3645 are also to be commended for the excellent service rendered.

CONTENTS

		Page
ACKNOWLEDGMENT		4
I.	INTRODUCTION	7
II.	SYSTEM DESCRIPTION	8
III.	EQUIPMENT	8
IV.	PROCEDURE	10
V.	GENERAL OBSERVATIONS	12
VI.	RESULTS	13
REFERENCES		15

TECHNIQUE FOR SPUTTERING TRANSPARENT CdS AND

CdZnS PHOTOCONDUCTIVE FILMS

I. INTRODUCTION

Information storage and display devices utilizing the electrooptic properties of transparent ferroelectric PLZT ceramics normally require selective switching of the ceramic polarization state.[1,2,3,4] This can be accomplished by utilizing a multilayer structure which consists of a photoconductive layer deposited on a ferroelectric ceramic substrate with a transparent electrode film deposited over the photoconductor.[1] Poly-N-Vinyl carbazole (PVK) layers have been used successfully for the photoconductor in Cerampic devices but polarization switching times are limited by the high resistivity of PVK layers. Also, the recent development of self-limiting electrooptic variable density filter devices enhances the need for high speed photoconductive layers.[5]

This report describes a method which has been developed for RF sputtering cadmium sulfide or cadmium sulfide doped with various mole percentages of zinc sulfide.[6] Since comprehensive studies of the electrical and optical properties of sputtered CdS and $CD_{1-x}Zn_xS$ exist the literature,[5,9,10] they will not be expounded on in this report. However, CdS/CdZnS sputtering procedure and apparatus which yields high quality films which do not require post-deposition anneals to achieve high dark resistivity, as well as general observations on sputtering these types of materials, will be presented in considerable detail. The films exhibit photocurrent decay

in the millisecond range and offer high ON/OFF (light/dark) resistivity ratios. Film adherence to a variety of substrates especially to those coated with thin films of indium-tin oxide (ITO) is excellent.[7,8] Vigorous scrubbing, mechanical polishing, or ultra-sonic cleaning with most solvents does not affect film adherence or photoconductive characteristics.

II. SYSTEM DESCRIPTION

The belljar chamber layout for sputtering CdS/CdZnS films is shown in detail in Figure 1. The sputtering target is attached to a water cooled backing plate and the sample to be coated is placed on a substrate heater. The belljar is evacuated and back filled with argon gas containing 1% hydrogen sulfide. A 13.5 MHz potential is applied to the target, ionizing the gas mixture in the chamber. A sputtering rate of approximately 1 μm/hour is achieved with a plasma power of 180 to 200 watts. A detailed description of the sputtering equipment and procedure follows.

III. EQUIPMENT

The entire target fixture, shown in Fig. 1, is machined from aluminum. Water tight sealing between the top cover and the target backing plate is accomplished by an 1/8 inch diameter viton "O" ring. $Cd_{1-x}Zn_xS$ sputtering targets with "x" varying from 0 to .5 were purchased from the Haselden Company. The necessary mechanical, thermal and electrical bonding between the backing plate and the target is provided by #3025 silver epoxy manufactured by Allied Products Corporation. The entire target assembly is electrically isolated from the belljar top plate by a Teflon ring. Vacuum sealing between the target assembly, Teflon ring, and belljar top plate is accomplished by two 1/8 inch diameter viton "O" rings. RF power is provided by a CVC AST-200 RF sputtering supply. A 17.8 cm diameter by 4.3 cm high

pyrex cylinder serves as a plasma shield and is attached to the chamber top plate by a wrap around stainless steel strap. The stainless steel shutter, located directly below the plasma shield, is controlled by a rotary feedthrough.

The substrate heater assembly consists of two stainless steel heater plate clamps, a .635 cm thick by 15 cm square quartz plate electroded on one side with a conductive ITO film,[7,8] four ceramic standoffs, and four stainless steel heater supports. Gold wires are placed between the ITO coated heater plate and the plate clamps to insure excellent electrical contact between the two. Quartz plate heater shields are used during deposition to prevent excessive CdZnS buildup on the heater assembly. Power for the heater is supplied by a variac controlled 60 Hz isolation transformer. When in operation, the transformer output voltage is applied between the two heater plate clamps causing current flow through the ITO film electrode. The heater assembly and sample substrate are brought to the desired temperature by controlling the ITO film current. Temperatures are monitored by a thermocouple wedged into a small hole located in the bottom center of the heater plate.

A stainless steel gas inlet tube is located near the plasma area. When sputtering, gas flow is directed over the substrate via the aluminum throughput guide which has a gas exit channel located opposite the gas inlet tube in the chamber. Pirani and thermocouple gauges monitor chamber pressure and a thermocouple gauge in the foreline as well as an ion gauge above the diffusion pump provide readings under the gate valve. Use of brass, zinc, silicon grease, and other potential contaminants are avoided in the sputtering chamber.

Figure 2 illustrates the gas flow for the system. Two gas supplies are used, one pure argon and one a mixture consisting of 99% argon plus 1% hydrogen sulfide. The pure argon is used only for flushing and backfilling

the chamber, while the gas mixture is used to increase the partial pressure of sulphur in the plasma and therefore the sulphur content in the deposited film. Nupro bellows valves select which gas tank supplies the system and a Granville Phillips leak valve controls the chamber gas flow rate. Both tank regulators are set at 15 psi. No adjusting of the variable leak valve is therefore needed to maintain chamber gas parameters when switching from one tank supply to another. The CVC manual gate valve is used to control chamber pressure during the sputtering run. The system is back filled with argon after sputtering by opening the Whitney forged body valve. All gas tubing is 1/4 inch diameter 316 stainless steel. A 2500 liter/second CVC diffusion pump charged with Dow Corning 705 silicon pump fluid is used.

IV. PROCEDURE

Although sputtering parameters vary somewhat with changes in target and substrate composition, a general procedure for sputtering $Cd_{1-x}Zn_xS$ is outlined in this section. Some of the more common problems associated with sputtering various target compositions as well as a summary of observations covering the sputtering technique will be covered in a later section of this report.

Figure 3 illustrates the procedure followed for sputtering $Cd_{.8}Zn_{.2}S$ over uncoated and ITO coated glass substrates. Slides to be coated are flushed with Cobehn (Cobehn Inc., Fairfield, New Jersey) and blown dry with an Effa duster. When PLZT ceramics are to be included in the run they are annealed at 600°C for 20 minutes after cleaning with Cobehn.

Adhesion of all $Cd_{x-1}Zn_xS$ films to various substrates differs greatly and can be improved if need be by flash sputter coating a discontinuous ITO film (generally less than 100 Å thick) over the substrate before the

$Cd_{1-x}Zn_xS$ run. D.C. sputtering ITO for 45 seconds with a 150 watt plasma will result in films with approximately 10^{10} ohms/square sheet resistivity.

The $Cd_{.8}Zn_{.2}S$ target is prepared before each run by sanding with steel wool, wiping with kimwipes, and blowing with an Effa duster. A complete chamber cleaning with HCl is required every 6 to 8 runs or whenever targets are changed.

After system preparation is completed, the samples are placed on the substrate heater and the unused heater area is covered with glass slides. The slides provide deposition monitor samples as well as prevent unnecessary $Cd_{.8}Zn_{.2}S$ buildup on the heater shields. Stress, due to film buildup after several runs, can break the 1/4" thick quartz plates if not prevented. During the system pumpdown, the target water and substrate heater are turned on so both temperatures will stabilize before sputtering. Target cooling water temperature is typically 10°C and the substrate heater requires 60 watts initially to maintain a temperature of 200°C. The power required to maintain a given substrate temperature drops as the run progresses because of the heat generated by the plasma. Initially the system is pumped down to 10^{-6} torr. After pumpdown the gate valve is partially closed and the argon-hydrogen sulfide gas is passed through the system. The variable leak valve and gate valve are adjusted simultaneously to achieve the desired chamber pressure and gas throughput. Chamber pressure levels, depending on target composition, vary between 18 and 30 microns and throughput levels typically fall between .01 and .1 torr liters/second. Thermocouple gage foreline pressure readings can be used as an indication of the system throughput.

Chamber parameters are allowed to stabilize for approximately 20 minutes before striking the 180 to 200 watt plasma. Sputtering is continued for 20 minutes before opening the shutter, exposing the 7.5 cm gap that exists between the target and substrate. This change in plasma area will require some readjustment of the plasma power to regain the proper level. Plasma power in the 180 to 200 watt range sputters approximately 1 μm/hour. To avoid pinholes, films must be thicker than 3 μm so at least 3 hours sputtering on the substrate is required. Care must be taken throughout the run to maintain a constant plasma power and substrate temperature because both parameters affect the stoichiometry of the films.

After removing target power, the argon-hydrogen sulfide supply is turned off and the argon supply bellows valve is opened for 20 minutes. This serves to cool the substrates and also flushes the hydrogen sulfide from the system before opening the chamber with an argon backfill.

Samples are fastened to a metal polishing fixture with phenyl salicylate merck (salol) and hand polished lightly for approximately one minute on a Buehler #40-7218 AB microcloth charged with Buehler #40-6352 .3 micron alumina to remove surface cloudiness. Final cleaning is accomplished with Cobehn; however water, acetone, alcohol, trichloroethylene and various other cleaning agents will not harm the films.

V. GENERAL OBSERVATIONS

1. Increasing plasma power will:

    A. Increase chances of discoloring PLZT ceramic substrates.

    B. Increase film stress.

    C. Reduce film adherence.

    D. Reduce fuzzy or cloudy film appearance.

2. Increasing throughput will:

   A. Increase contamination of pumping system.

   B. Increase possibility of fuzzy or cloudy film appearance.

   C. Increase deposition rate.

   D. Reduce film contamination.

   E. Reduce possibility of pinholes.

   F. Reduce film adherence.

3. Increasing substrate temperature will:

   A. Increase film dark resistivity.

   B. Increase film stress.

   C. Reduce film adherence.

4. Increasing chamber pressure will:

   A. Improve film adherence.

   B. Reduce film stress.

NOTE: Increasing the zinc sulfide content of the sputtering target increases film stress which adversely affects adherence. Therefore as the target zinc sulfide content is increased, the plasma power, throughput, and substrate temperature must be reduced. Using higher chamber pressures may also be necessary to promote good film adherence.

VI. RESULTS

$Cd_{1-x}Zn_xS$ targets with "x" varying from 0 to .5 have been used, however, targets with "x" equal to .2 have proved to be the most useful for PLZT ceramic device applications. Film adhesion is excellent and film color closely matches the pale yellow color of the ceramics.

Samples for checking photoconductivity in the thickness direction are made by sputtering CdZnS over an ITO coated slide. An 8 x 8 mm square of aluminum or indium is then deposited over the CdZnS film. Voltage is applied across the film thickness by making contact to the metal electrode and ITO film and the resultant current is measured as a function of illumination. Light or "ON" resistivity with a light source intensity of 450 mw/sq. cm provided by a Bausch and Lomb #31-33-50 tungsten filament lamp is typically $1 \times 10^{6}\ \Omega \cdot cm$. The dark or "OFF" resistivity varies between 10^{11} and $10^{13}\ \Omega \cdot cm$. Figure 4 illustrates the transparency of a polished 4 μm thick $Cd_{.8}Zn_{.2}S$ film deposited over a Fisher brand #12-552 glass slide. Figure 5 illustrates the light transmittance characteristics of the $Cd_{.8}Zn_{.2}S$ slide pictured in Figure 4.

REFERENCES

1. W. D. Smith and C. E. Land, "Scattering-Mode Ferroelectric-Photoconductor Image Storage and Display Devices," Appl. Phys. Letts., 20, 169 (1972).
2. J. R. Maldonado and A. H. Meitzler, "Strain-Biased Ferroelectric-Photoconductive Image Storage and Display Devices," Proc. IEEE 59, 368 (1971).
3. C. E. Land and W. D. Smith, "Reflective-Mode Ferroelectric-Photoconductor Image Storage and Display Devices," Appl. Phys. Letts., 23, 57 (1973).
4. J. R. Maldonado and D. B. Fraser, "PLZT Ceramic Display Devices for Slow-Scan Graphic Projection Displays," Proc. IEEE 61, 975 (1973).
5. W. D. Smith and D. G. Schueler, "Self-Limiting Electrooptic Variable Density Filters, Wescon Convention Record, Sept. 11-14, 1973, Paper 30.4.
6. The sputtering method described in this report is a variation of the method used by D. B. Fraser (see Reference 9).
7. J. B. Snelling, "Technique for Sputtering Thin-Film Transparent Electrodes," Sandia Laboratories Research Report SC-RR-710048, July 1971.
8. D. B. Fraser and H. P. Cook, "High Conductive, Transparent Films of Sputtered $In_{2-x}Sn_xO_{3-y}$," J. Electro Chem. Soc., pp. 1368-1374, Oct. 1972.
9. David B. Fraser and H. Melchior, "Sputter-Deposited CdS Film with High Photoconductivity through Film Thickness," J. Appl. Phys., 43, No. 7, (1972).
10. David B. Fraser, "Sputtered Films for Display Devices," Proc. IEEE 61, No. 7 (1973).

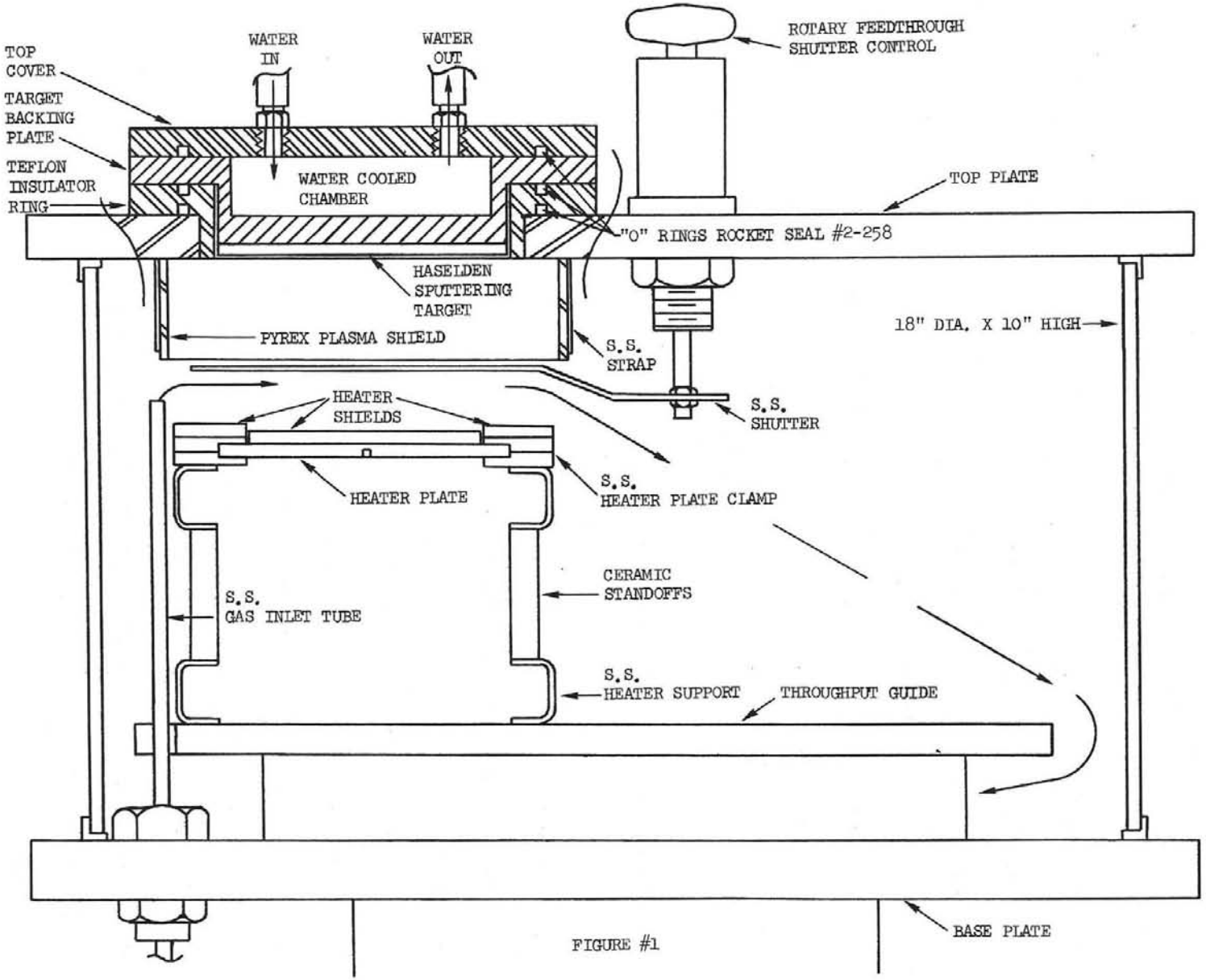
WATER IN
WATER OUT
ROTARY FEEDTHROUGH SHUTTER CONTROL
TOP COVER
TARGET BACKING PLATE
TEFLON INSULATOR RING
WATER COOLED CHAMBER
TOP PLATE
"O" RINGS ROCKET SEAL #2-258
HASELDEN SPUTTERING TARGET
PYREX PLASMA SHIELD
S.S. STRAP
18" DIA. X 10" HIGH
S.S. SHUTTER
HEATER SHIELDS
HEATER PLATE
S.S. HEATER PLATE CLAMP
CERAMIC STANDOFFS
S.S. GAS INLET TUBE
S.S. HEATER SUPPORT
THROUGHPUT GUIDE
BASE PLATE

FIGURE #1

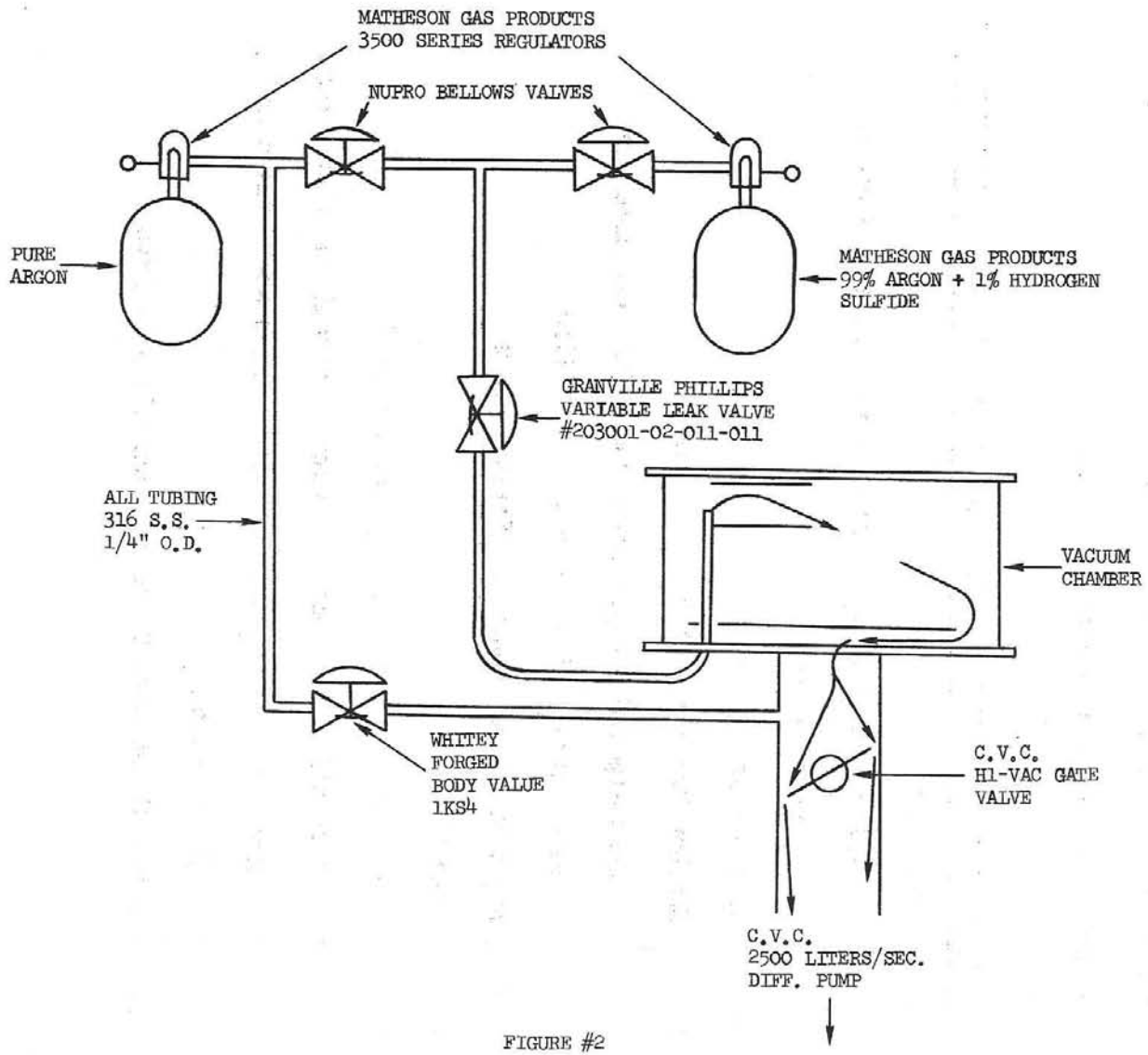
MATHESON GAS PRODUCTS
3500 SERIES REGULATORS
NUPRO BELLOWS VALVES
PURE
ARGON
MATHESON GAS PRODUCTS
99% ARGON + 1% HYDROGEN
SULFIDE
GRANVILLE PHILLIPS
VARIABLE LEAK VALVE
#203001-02-011-011
ALL TUBING
316 S.S.
1/4" O.D.
VACUUM
CHAMBER
WHITEY
FORGED
BODY VALUE
1KS4
C.V.C.
HI-VAC GATE
VALVE
C.V.C.
2500 LITERS/SEC.
DIFF. PUMP

FIGURE #2

RUN NO. 15 DATE 12/14/74 FILM $Cd_{.8}Zn_{.2}S$

Substrates: 1 glass slide w/5000 Å of ITO, 1 glass slide w/flash coat of ITO, 4 plain glass slides.

Substrate Prep: Cobehn rinse and blow dry.

Target Prep: Steel wool, kimwipe and blow.

Time	Procedure
9:50	Rough Down
	Fill nitrogen trap - turn on target water - turn on substrate heater.
10:00	Open Hi-Vac Gate Valve
10:20	Chamber Pressure: 1.2×10^{-6} torr
	Open argon/H_2S Nupro valve and adjust variable leak gate valve. Allow system to stabilize.
10:40	Apply RF Target Power and Strike Plasma
11:00	Open Shutter
3:00	Close Shutter ~ Total Hours Sputtering 4
	Turn off: RF - heater - water - pirani and thermocouple gauge - argon/H_2S supply. Open argon Nupro valve and flush system.
3:20	Close Hi-Vac Gate Valve and Backfill with Argon.

FIGURE 3

	AT START OF RUN	AT END OF RUN
- Heater Voltage:	33v	28v
- Heater Current:	1.8a	1.5a
- Substrate Temp:	200°C	200°C
- Chamber Pressure:	22.5μ	22.5μ
- Foreline Pressure:	44μ	45μ
- Granville Phillips Valve Setting:	88.8	88.8
- Gate Valve: Position		
- RF Driving Current:	15ma	15ma
- RF Plate Current:	150ma	150ma
- RF Plasma Power:	180w	180w
- Target H_2O Temp:	10°C	11°C

RESULTS

Film Thickness. . . . . 3.9 μm

Indium Dot Area . . . . . 8 square mm

Number of Test Dots 20

Dot Test Voltage. 2

Typical Dot "ON" Current. . . . . 2×10^{-3} amps

Typical Dot "OFF" Current . . . . . 1×10^{-9} amps

FIGURE 3 (Continued)

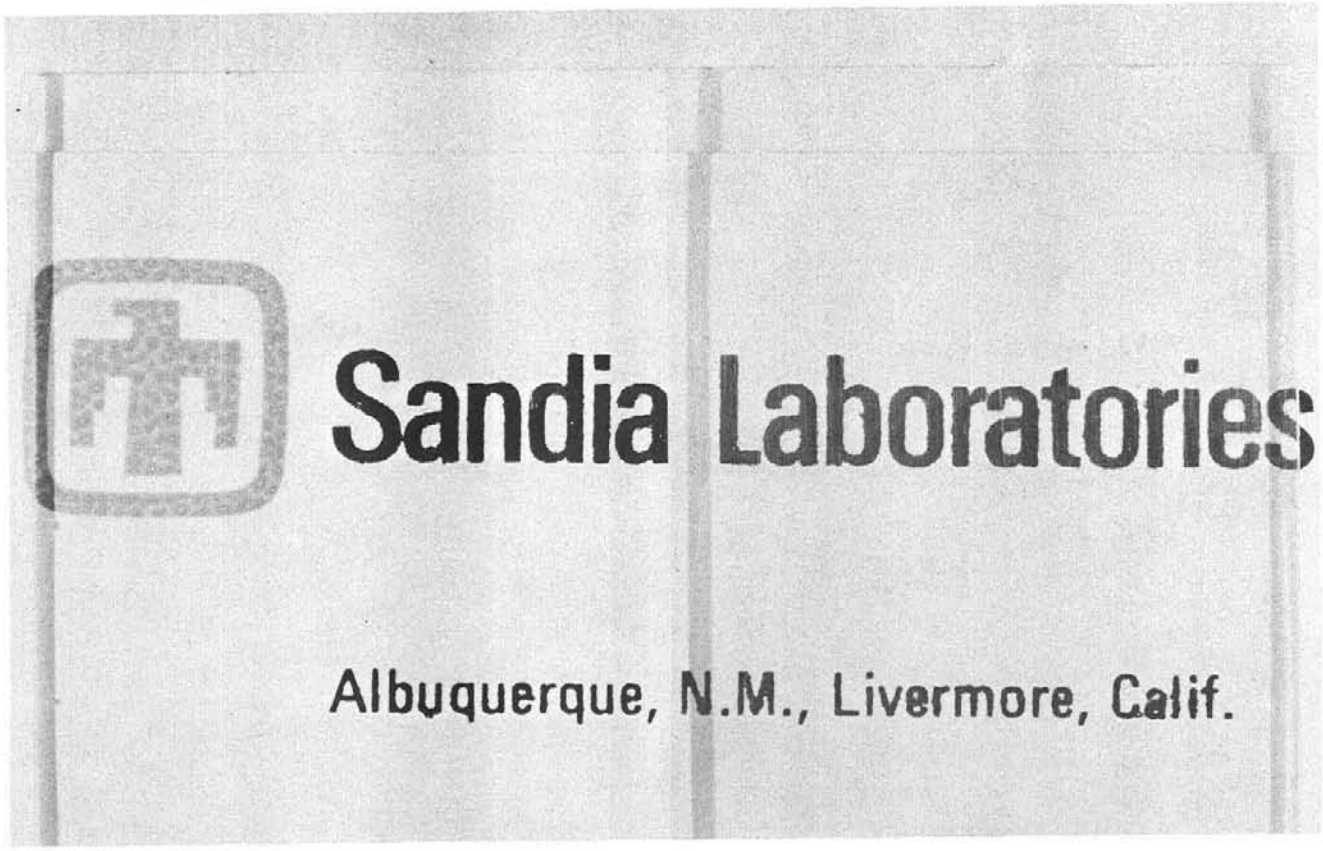

Left slide — clear glass Right slide — 4u thick $Cd_{.8}Z_{.2}S$ film

FIGURE #4

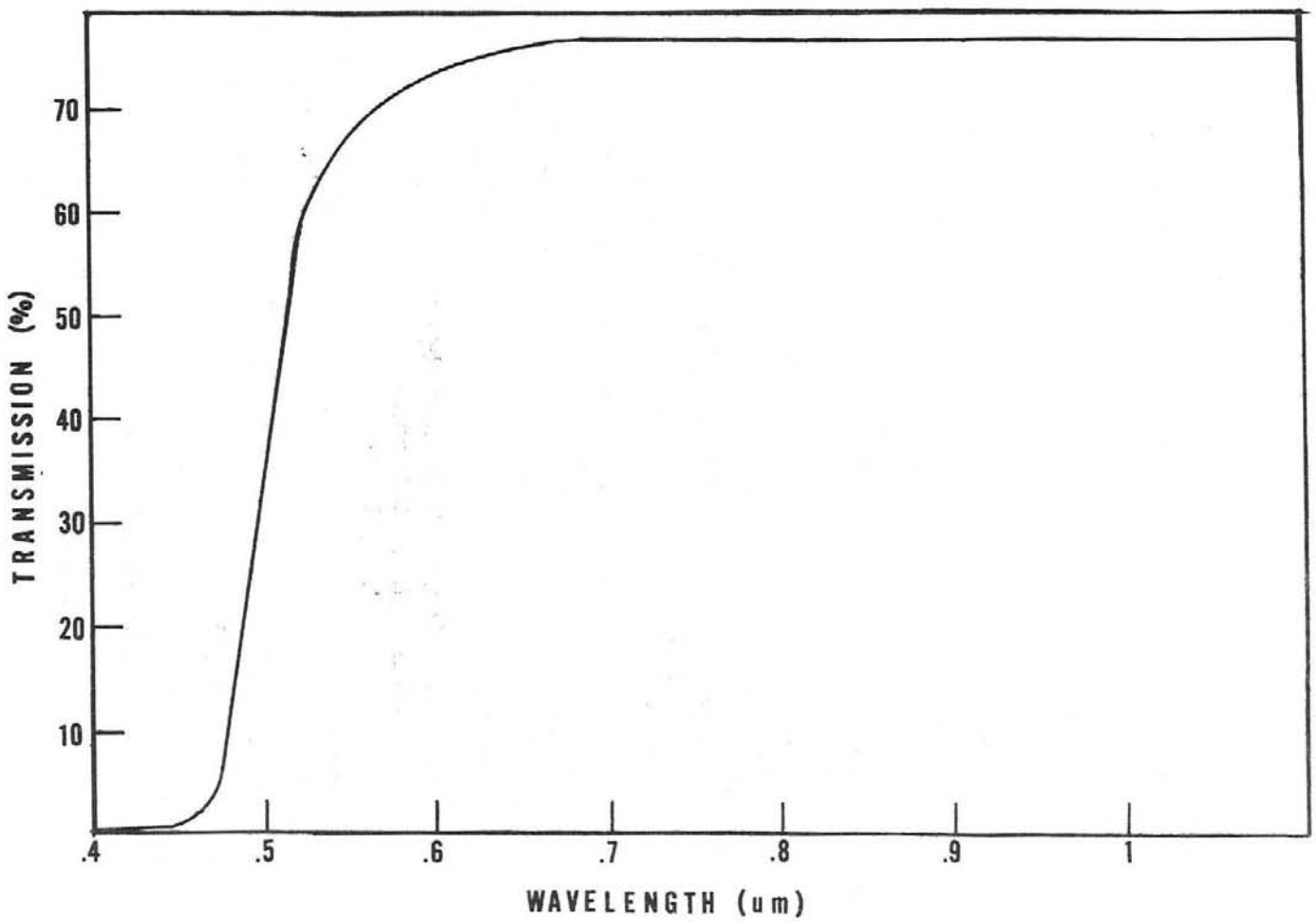

FIGURE #5

Distribution:

2000 K. D. Bowers
2100 W. J. Spencer
2110 E. G. Franzak
2140 B. L. Gregory
2141 J. G. Fossum
2141 V. A. Wells
4700 D. Shuster
5000 A. Narath
5100 J. K. Galt
5110 F. L. Vook
5111 S. T. Picraux
5111 J. A. Borders
5112 E. P. EerNisse
5112 C. E. Barnes
5112 H. J. Stein
5130 G. A. Samara
5131 L. W. Davison
5132 P. M. Richards
5132 P. S. Peercy
5133 D. G. Schueler (2)
5133 H. G. Baerwald
5133 R. E. Hibray
5133 R. A. Kiehl
5133 C. E. Land (40)
5133 I. D. McKinney
5133 J. B. Snelling (40)
5150 J. E. Schirber
5154 B. Morosin
5154 R. K. Quinn
5155 R. T. Johnson
5155 C. H. Seager
5155 E. L. Burgess
5155 R. D. Nasby
5710 G. E. Brandvold, Attn: R. P. Stromberg
5800 L. M. Berry, Attn: R. L. Schwoebel
M. J. Davis
5834 D. M. Mattox
5834 R. S. Berg
8340 J. L. Wirth
9532 P. D. Thacher
3141 L. S. Ostrander (5)
8266 E. A. Aas (2)
3151 W. L. Garner (3)
For: ERDA/TIC (Unlimited Release)
ERDA/TIC (25)
(R. P. Campbell, 3171-1)