SANDIA CORPORATION REPRINT

GRID BLACKOUT IN VACUUM TUBES

by

K. D. Hardin

June 1961

BEST AVAILABLE COPY

TOTAL PAGES: 26

TABLE OF CONTENTS

	Page
Introduction	5
Character and Measurement of Blackout	6
Equivalent Circuit	8
Some Circuit Effects of Blackout	11
Conclusions	12
BIBLIOGRAPHY	26

LIST OF ILLUSTRATIONS

Figure		Page
1	-- Anode waveform distortion from blackout and cathode interface	13
2a	-- Description of blackout distortion	14
2b	-- Graphical determination of developed bias	15
3	-- Overshoot and recovery-time constant as a function of input pulse width	16
4	-- Overshoot and recovery-time constant as a function of input pulse amplitude	17
5	-- Developed bias as a function of input pulse width and input pulse amplitude	18
6	-- Input current and input resistance as a function of pulse amplitude	19
7	-- Overshoot as a function of input current	20
8	-- Decay of developed bias	21
9	-- Overshoot, developed bias, recovery-time constant, and peak grid current as a function of heater voltage	22
10	-- General equivalent circuit	23
11	-- Equivalent circuit, parallel R-C	24
12	-- UHF mixer, gain reduction	25

ABSTRACT

Grid blackout, variously called Whippany effect, desensitization, or grid effect, is a phenomenon characterized by residual negative grid charging following application of voltages causing grid current to flow. All types of vacuum tubes examined have been observed to exhibit grid blackout in considerable variation. The effect is believed to be caused by formation of an extremely thin layer of evaporated semiconductor from the cathode which causes the actual grid surface potential to differ from the applied grid voltage. Blackout mechanism performs an operation on positive input pulses to give an anode waveform similar in some respects to that caused by cathode interface except blackout time constants are very much longer than observed with cathode interface. Detection of blackout in a tube can be accomplished in several ways. A method which gives quantitative data is presented allowing characterization of the blackout effect applicable to calculation of circuit degradation. Data are presented for several tube types which show developed bias and discharge time constants as a function of pulse input conditions. Blackout can seriously change the performance of any vacuum tube circuit which utilizes the tube in positive grid operation. The effects on CW oscillators and UHF mixers are discussed. An equivalent circuit which simulates some portions of the blackout phenomenon is presented and used to calculate effective capacitance and resistance associated with the grid surface.

GRID BLACKOUT IN VACUUM TUBES

Introduction

Grid blackout, variously called Whippany effect, desensitization, or grid effect, is a phenomenon characterized by residual negative grid charging following application of voltages causing grid current to flow. Its effect is import in any circuit which drives the tube into a positive grid mode of operation. All types of vacuum tubes examined have been observed to exhibit grid blackout in considerable variation. Cathode interface can produce similar effects, and careful measurement is necessary to prevent confusion of the two characteristics.

The effect is believed to be caused by formation of an extremely thin layer of semiconductor material, such as BaO, which causes the actual grid surface potential controlling the electron stream to differ from the applied grid voltage. Grid current charges the grid surface and upon removal of grid drive, a negative charge remains which reduces plate current accordingly. Charge then leaks off through body resistance of the semiconductor impurity, or by thermionic emission. Copeland[1] describes the effect as a shift in contact potential and shows its dependence upon grid temperature and charging current. Nottingham,[2] in experiments with diodes containing thoriated tungston heater-cathodes, suggests that a monatomic layer of thorium results in a double potential hump through which electrons must pass in entering or leaving the metal and between these two humps is the valley which constituted the charge trap. Electrons are assumed to escape from the trap by thermionic emission over the potential barrier. Copeland believes the thorium layer to be separated from the metal by a layer of oxygen and that the charge accumulated by direct 'ionization' of thorium atoms.

This paper will not attempt to elaborate further on the formation of blackout but will give an account of the circuit effects and measurement techniques.

Character and Measurement of Blackout

Figure 1 shows a simple amplifier, subjected to two grid-drive conditions, and the resulting anode-voltage waveforms caused by blackout and cathode interface. It is seen that blackout is observed only when the grid draws current, whereas cathode interface is independent of grid current. The time constants associated with blackout are very much longer than those observed from cathode interface. Blackout recovery times from 10 to 500 microseconds have been measured.

Detection of blackout in a vacuum tube can be accomplished in several ways. If a plate-current meter is inserted in series with the plate-load resistor of Figure 1 and pulses of sufficient duration (1 μs) and repetition rate (2000 pps) are applied to the grid such that grid current is drawn, average plate current will decrease by an amount depending on the severity of blackout. Plate current decreases as grid voltage, repetition rate, are increased. This method, although giving a simple check for blackout, does not give quantitative data upon which to evaluate the effects in a particualr circuit application.

Measurement of static and dynamic amplification factor with equal swings about zero bias will show the presence of blackout if static amplification factor is observed to be less than the dynamic amplification factor. Tests on a large number of 6299 close-spaced triodes gave values of dynamic MU/static MU ranging from 1.6 to approximately 1. In some applications the amplification-factor measurements will correlate reasonably well with circuit performance.

Babcock[3] suggests another method of blackout measurement in which heater voltage and a small positive grid voltage are applied simultaneously to the tube, and grid current versus time is observed. A tube with blackout will build up very slowly to maximum grid current.

A method which gives more quantitative data is now described, as illustrated in Figure 2. The blackout mechanism performs a function on input pulses to give an anode waveform as shown in Figure 2(a). Application of the observed anode waveform to plate characteristics, as shown in Figure 2(b), will give the effective grid-voltage waveform and developed bias. Recovery-time instant, TC_2, is observed to be very

much greater than charge time, TC_1, the ratio normally being approximately 10/1. Charge-time constant cannot be effectively measured from the leading edge of the anode pulse since it may be very short (approx. 0.8 μs), and since the anode may be driven to saturation, completely masking the leading-edge spike. In measurements of blackout, care must be taken to insure that no capacitive coupling is used in the input which might appear as blackout or add to the tube blackout. Also, the input pulse trailing edge must return to zero within a few millivolts.

Recovery-time constant, overshoot voltage, input pulse-current, and developed bias are presented in Figures 3 through 6 for a Z-2389 triode as functions of input pulse width and amplitude. It is seen that developed bias rapidly saturates as a function of impulse width and that the time constant, TC_1, to reach 67% of a maximum developed bias decreases as pulse amplitude is increased. Developed bias as a function of input pulse voltage (Figure 5) shows a near exponential increase. Curves of developed bias as a function of input pulse current rather than input pulse voltage (Figure 7) show a rapid saturation in developed bias as input current is increased. Recovery-time constant, TC_2, is very nearly constant as a function of input pulse width (Figure 3). This constant, however, exhibits rather unpredictable behavior as a function of input-pulse width (Figure 4), having a tendency to increase linearly at small pulse widths and to 'peak' at large pulse widths. Developed bias, when plotted against time during the recovery interval, gives a characteristic which appears to be composed of two exponential decays. Immediately after the pulse and up to about 40 microseconds, the decay is closely exponential. After 40 microseconds the decay may still be exponential but with a longer time constant (Figure 8).

The effects of heater voltage on developed bias and recovery-time constant are shown in Figure 9. Developed bias increases rapidly as heater voltage is increased, then saturates at about 7.5 heater volts. Recovery-time constant decreases slightly as heater voltage is increased. The effect of heater voltage would be expected to vary considerably among tubes, depending on the placement of corresponding input current changes as shown in Figure 7. That is, a tube operating so that heater voltage changes caused grid current changes on the steep left portion of Figure 7 would be expected to show considerable variation in developed bias. A tube operating on the flat region of the ig-dev. bias curve would exhibit small changes in developed bias with heater-voltage variations. Besides changing the input current, the heater voltage will shift the grid temperature so that the characteristics of Figure 9 cannot

be attributed entirely to changes in the input grid current. Continued increase in heater voltage would be expected to lower the developed bias, since grid current will saturate and since the blackout mechanism is inversely proportional to grid temperature. That is, a cool grid will develop more bias than a hot grid. Recovery-time constant would be expected to continue decreasing with further increases in heater voltage.

Investigations of several other tube types, including cylindrical close-spaced triodes, have given the same general characteristics. Some tubes may exhibit blackout to such an extent that plate current is completely cut off after the input pulse for a period of several hundred microseconds, in which case the developed bias is more difficult to determine. Blackout is reasonably stable with time and, if it changes, tends to become less. In most tubes it can be completely or partially destroyed by operating the tube momentarily at a high level of grid dissipation.

In some experiments conducted on special 417A triodes[4] it was found that gold-plated grids produced values of developed bias ten to twenty times greater than control tubes with clean unplated grids. The recovery-time constant was observed to be consistently longer with gold-plated grids than with unplated control tubes. Gold apparently increased the build-up of residual bias by raising the body resistance of surface impurities or by enhancing the 'ionization' effect of incident electrons on the grid surface. If loss of charge occurs through thermionic emission during the recovery interval, the gold can poison to some extent the grid emission and account for the longer recovery-time constants observed.

Equivalent Circuit

To determine whether a realistic equivalent circuit exists it is assumed that the tube transfer characteristics are linear, in the region from zero to the developed bias, and that the information available is the various relationships between the input pulse, e_o, and plate voltage, V_o. Under this assumption, then the equivalent grid voltage will be identical in form to the plate waveform except for the constant multiplying factor

$$\frac{1 + \frac{R_L}{r_p}}{gmR_L}$$

The transfer network of Figure 10 is to be determined. From the nature of developed bias versus input pulse-width curves, the equivalent circuit of Figure 11 is assumed for the purpose of investigating grid charging.

Developed bias is then

$$V_g = \frac{R_f}{R_N + R_f} e_o(1 - e^{-pt}) , \quad p = \frac{R_f + R_N}{(R_f R_B + R_f R_N + R_B R_N)C} , \tag{1}$$

where R_N is a low impedance during grid conduction and becomes essentially open when grid drive is removed. In this model, R_f must change from a relatively low value during the pulse to a high value R_f' after the pulse such that $R_f' \gg R_B$; then the developed bias is equivalent to the capacitor voltage acquired during the charge pulse.

If pulse width is $\gg \frac{1}{p}$, then developed bias, V_g, $= \frac{R_f}{R_N + R_f} e_o$, and measurement of input pulse current, i_o, gives

$$R_N + R_f = \frac{e_o}{i_o} , \quad R_f = \frac{V_g}{i_o} .$$

Values for C, R_f, and R_N obtained from these relationships, where $R_B(R_f + R_N) \ll R_f R_N$ give curves of Eq. (1) which show that the parameter p must decrease with time or decrease as V_g increases to fit the observed behavior of developed bias as a function of pulse width. Ionization of the grid surface becomes more complete as developed bias builds up and, in effect, may increase the effective capacitance, C, or resistance, R_B, in the model. If we assume that $C = AV_g + B$, the relation

$$V_g = .91\left(1 - e^{-\frac{.113\times10^6}{1.995V_g - 1.328} t_p}\right), \quad V_g > 0.665 , \tag{2}$$

best fits the observed data (Figure 5; t_p = 0 to 10 μs, e_o = +2 volts). With this particular curve, maximum developed bias was 0.91 volt at pulse widths in excess of 10 microseconds. Then,

$$0.91 = \frac{R_f}{R_N + R_f} e_o .$$

The observed grid current at this developed bias was 0.7 milliampere, so $R_f = \frac{V_g}{i_o} =$ 1300 ohms and R_N = 1557 ohms.

At t_p = 10μs and e_o = +2 volts, the observed values of V_g and TC were 0.89 volt and 36 microseconds, respectively. Parameters of the model at this point, again assuming $R_B(R_f + R_N) \ll R_f R_N$,

$$R_f = 1300 \text{ ohms}$$

$$C = 0.0056 \text{ microfarad}$$

$$TC_1 = \frac{1}{p} = 3.96 \text{ microseconds}$$

$$R_N = 1557 \text{ ohms}$$

$$R_f = 6450 \text{ ohms}$$

C is determined from

$$p = \frac{.113 \times 10^6}{1.995V_g - 1.328} .$$

Constant values for the model parameters R_B, R_f, R_N are consistent with the observed behavior of developed bias as a function of input pulse width. Effective capacitance increases linearly as charge voltage increases covering the grid with a larger 'area' of ionization. As input pulse voltage is varied, however, R_f and R_N change rapidly (Figure 6) becoming very much smaller at higher input voltages so that TC_1 becomes very small and developed bias saturates at about 10 volts input. The resistor-capacitor model describes fairly well the observed behavior during charge or ionization time, if the appropriate values of R_f and R_N are chosen by measurement of input current, and is adequate to fix the blackout parameters R_f, TC_1, and C at a given operating point.

Since $TC_2 \gg TC_1$, the simple equivalent circuit does not hold true after the pulse. R_f would have to assume a value of 6450 ohms through which the charge on C could leak off. Physically in the grid this abrupt change in resistance must take place through escape of the electrons by thermionic emission or by deionization of the surface contamination material with the base metal. Observed discharge form is approximately that of a parallel resistor-capacitor combination (Figure 8) so that the model can be used in determining circuit response by considering the charge and discharge conditions separately.

Some Circuit Effects of Blackout

Blackout was first observed at Sandia Corporation in UHF mixer triodes subjected to large leakage power from a radar transmitter. If the mixer is called upon to perceive and amplify a target echo in the period while blackout exists, conversion gain may be reduced by as much as 20 DB. In Figure 12, the UHF echo signal is represented as a low-level continuous sine wave and the transmitter leakage power is duplicated by application of a 50-volt pulse. A tube which has no blackout will have the same gain just after the interrupting pulse as before it. A tube with blackout will suffer a loss in gain immediately after the pulse, which recovers as the grid charge returns to normal. With space current described as

$$I = K\left(V_g + \frac{V_p}{\mu}\right)^{\alpha},$$

the loss in gain at a particular time of interest after the pulse is

$$\text{DB loss} = 20\left(1 - \frac{1}{\alpha}\right)\log \frac{I_o}{I_1} \qquad (3)$$

where I_o is the plate current prior to interruption and I_1 is the plate current at a particular instant during recovery-time, TC_2. At relatively high repetition rates, when TC_2 is an appreciable part of the pulse period, average current, Ib, without interrupting pulses applied is greater than I_o. Then expression (3) represents only transient loss. Total DB loss in gain is found by substituting average current in place of I_o in the expression where Ib is measured without interrupting pulses applied to the tube. Blackout loss in gain can be reduced in this instance by employing a cathode bias which both mitigates amplitude of the grid-cathode impulse and provides negative feedback. In Class C oscillators, blackout can cause squegging or blocking at a frequency rate depending on the magnitude of blackout constants and the external grid-leak constants. Blocking rate will also depend on heater voltage and anode voltage. A readjustment of the grid-leak time constant will correct the squegging condition with a particular tube over a limited range of operation, but since blackout parameters vary considerably among tubes, a single adjustment of

circuit values may not suffice. Squegging can be controlled by suitable limits on developed bias and recovery-time constant from pulse tests on the tube.

The calculated period of an astable multivibrator can be altered by blackout and produce otherwise unaccounted variations in performance among tubes. With known grid drive voltage and pulse width, blackout measurements of developed bias and recovery-time constant can be used to predict the period and output voltage of an astable multivibrator under various anticipated blackout conditions.

Conclusions

Blackout characteristics under various operating conditions have been presented in detail for a close-spaced planar triode considered typical of performance observed with several other tube types. The form of the blackout characteristics suggests an equivalent circuit consisting of a parallel resister-capacitor in series with the grid. However, it is shown that observed behavior departs considerably from such a model. With suitable restrictions on the effective capacitance and shunt resistance, the model can be used to determine blackout parameters useful in predicting circuit performance under blackout conditions. Since the charge or ionization appears to encompass a larger proportion of the grid area as time passes during charge interval, investigation of an equivalent circuit model which employs a 'dual' grid concept might yield a more accurate description of the observed behavior.

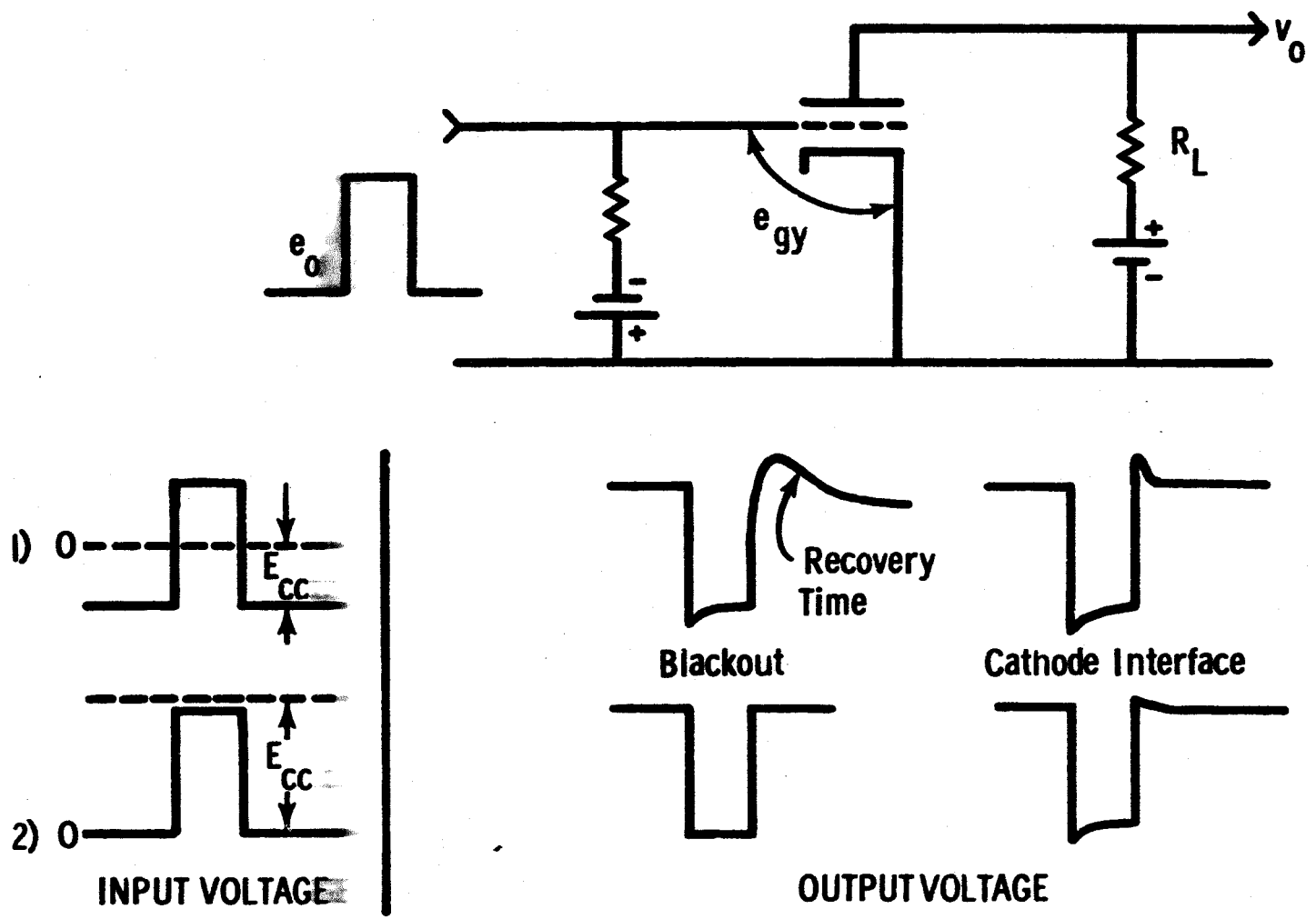

Fig. 1 -- Anode waveform distortion from blackout and cathode interface

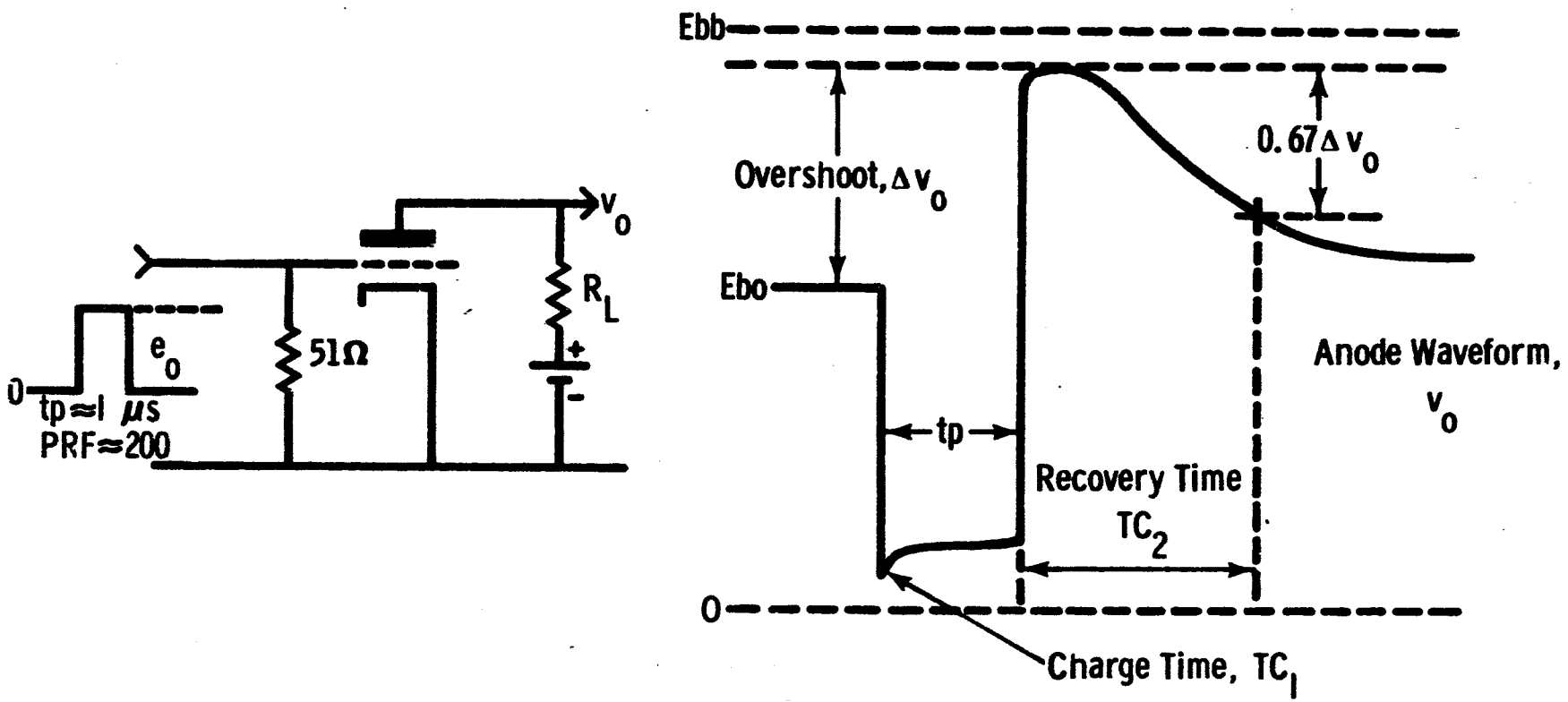

Fig. 2a -- Description of blackout distortion

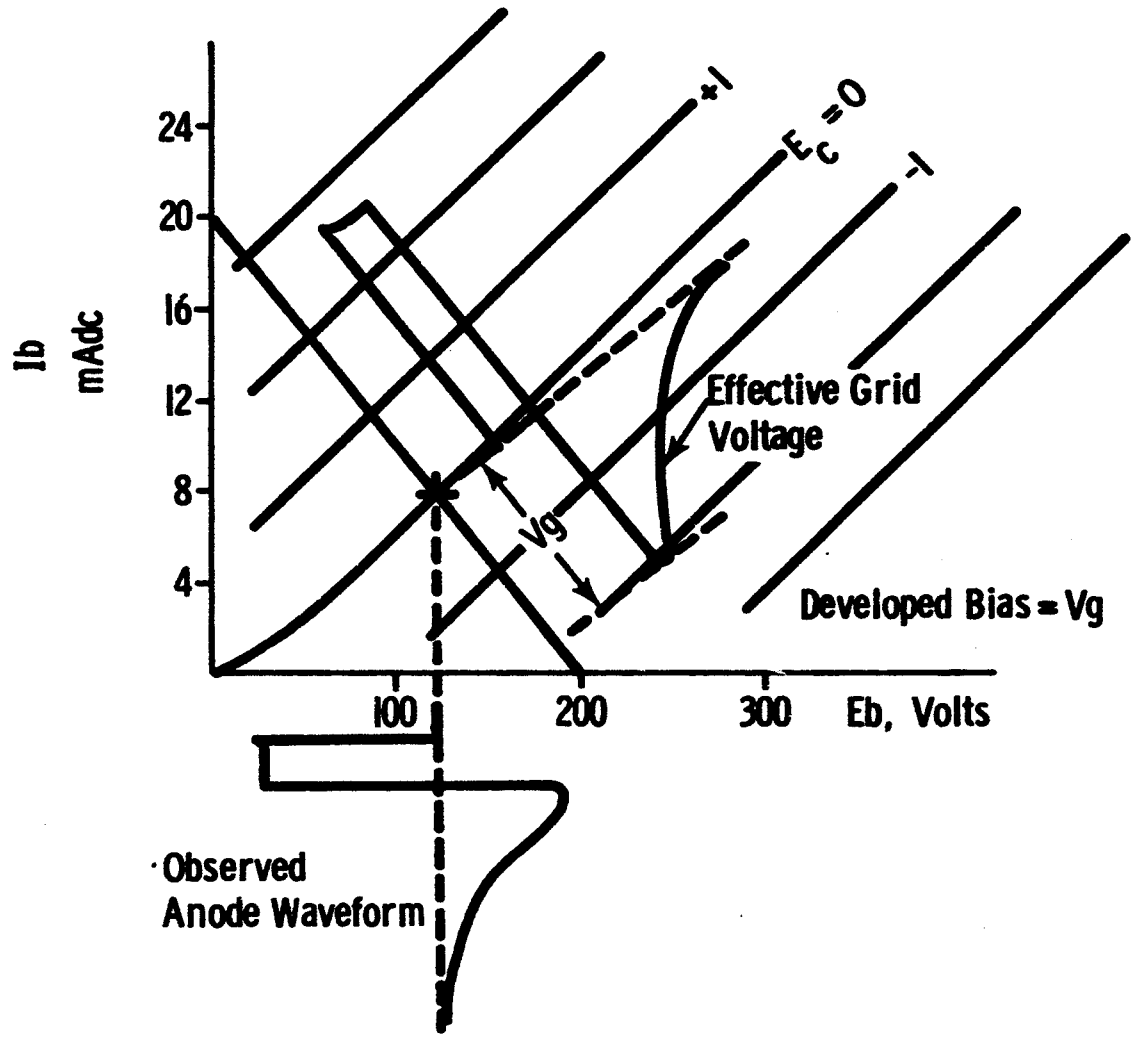

Fig. 2b -- Graphical determination of developed bias

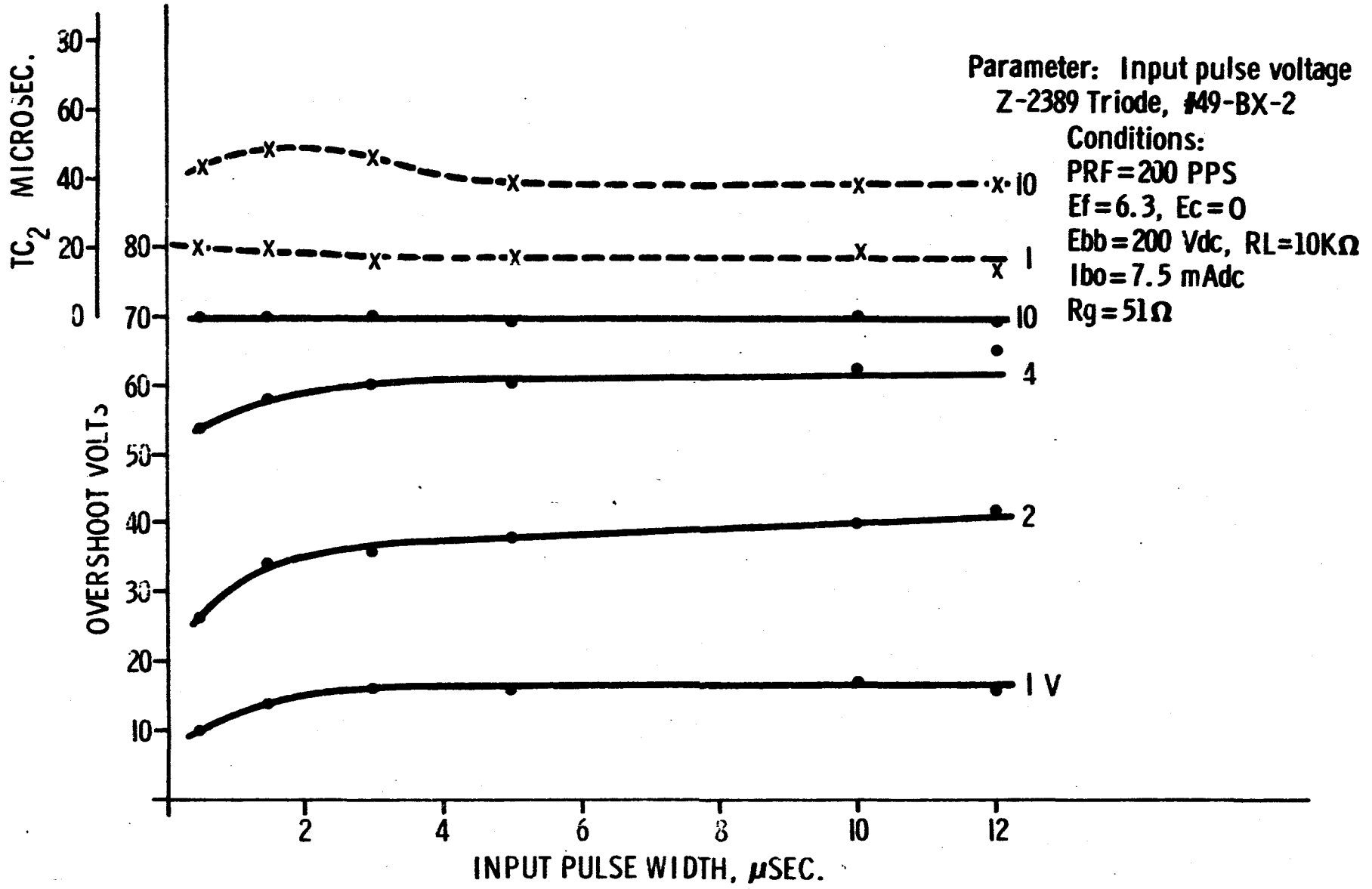

Fig. 3 -- Overshoot and recovery-time constant as a function of input pulse width

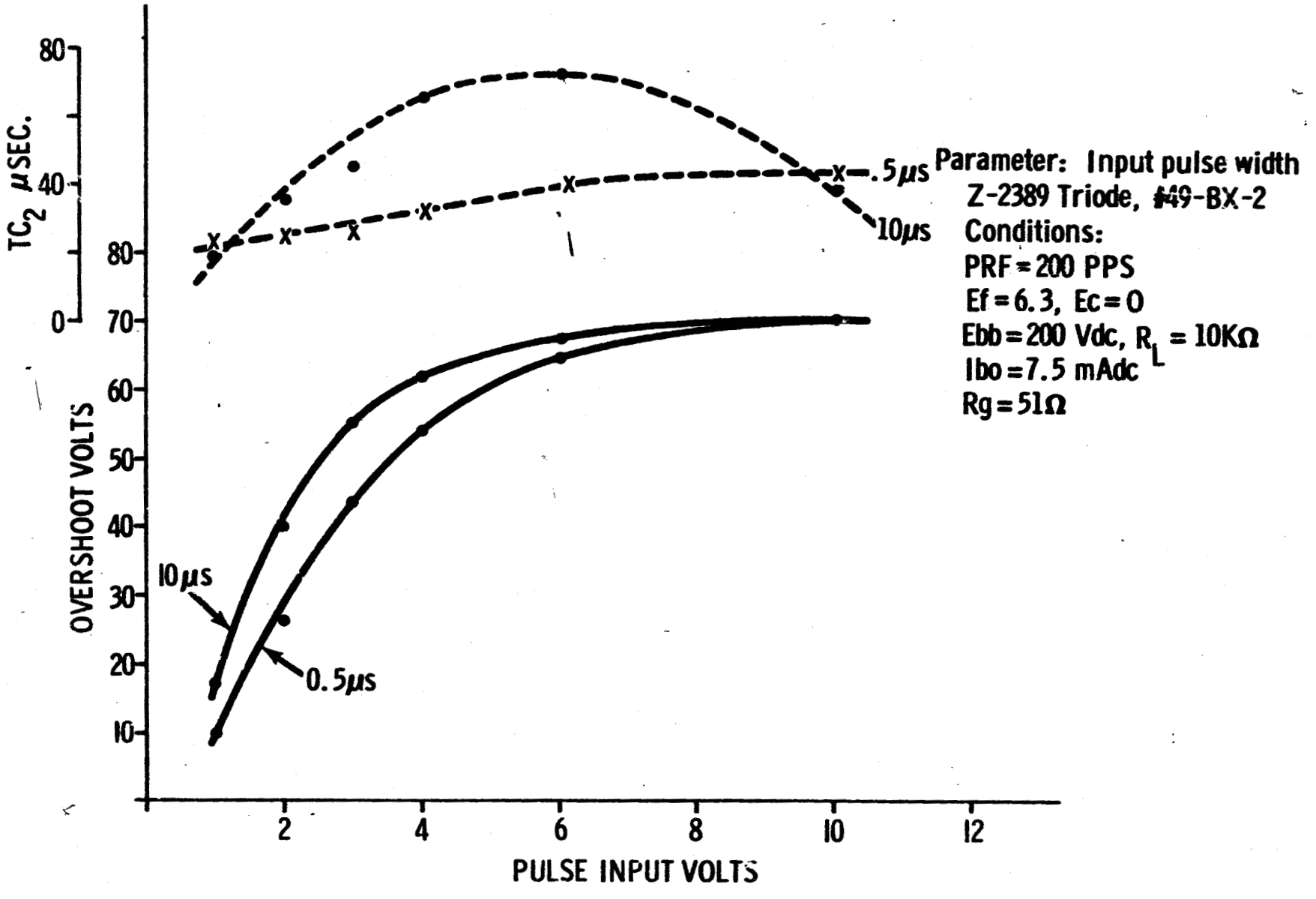

Fig. 4 -- Overshoot and recovery-time constant as a function of input pulse amplitude

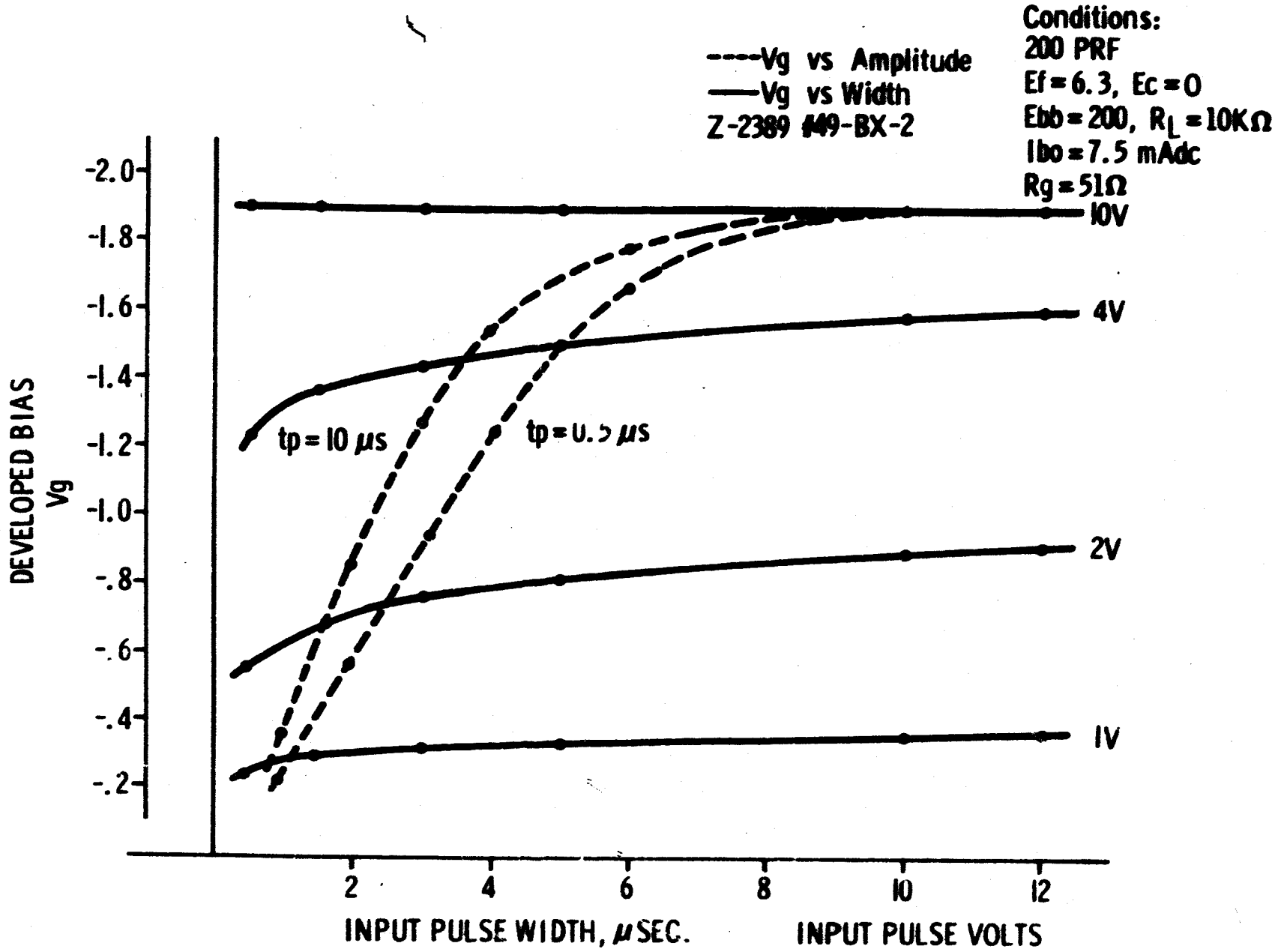

Fig. 5 -- Developed bias as a function of input pulse width and input pulse amplitude

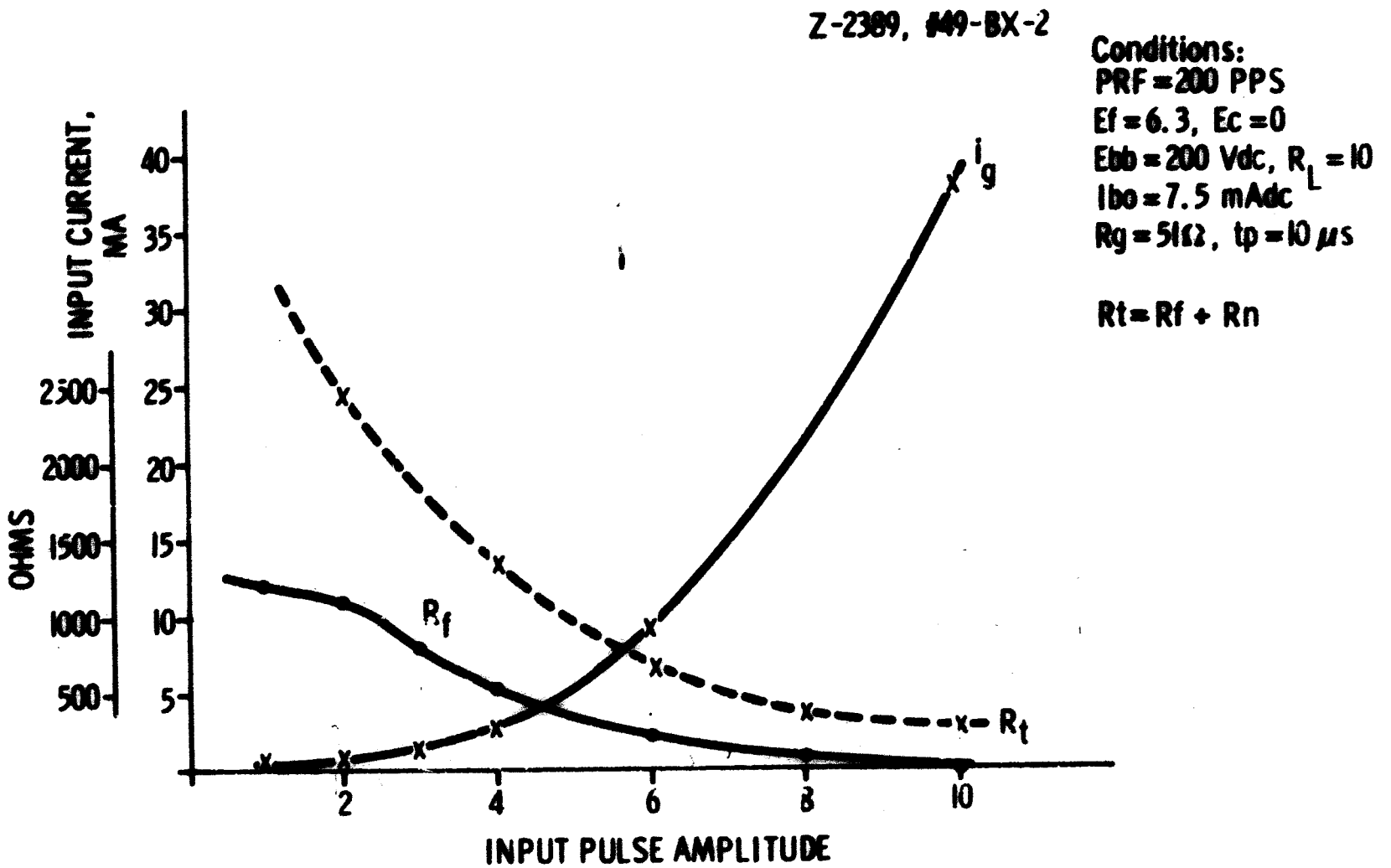

Fig. 6 -- Input current and input resistance as a function of pulse amplitude

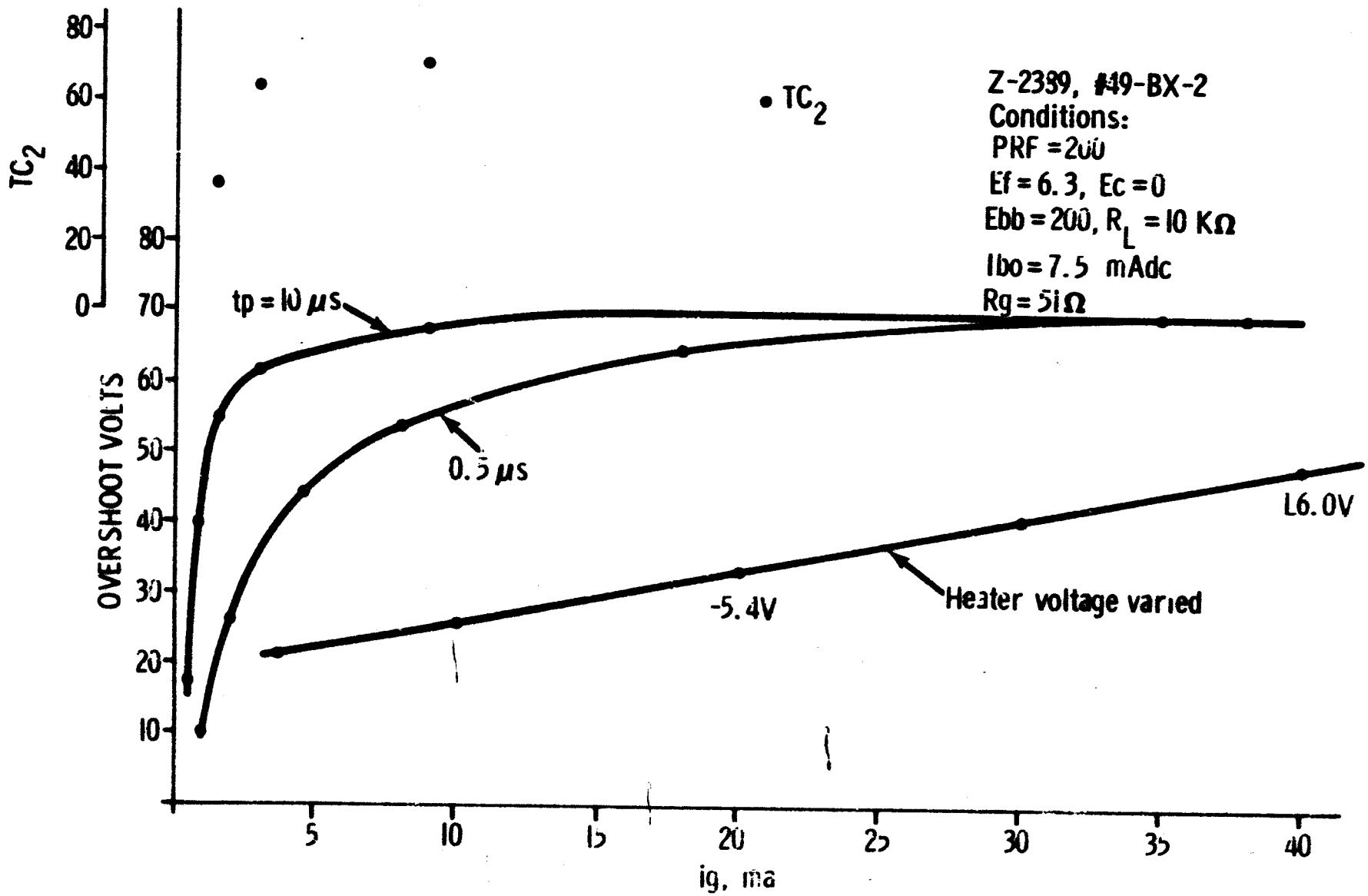

Fig. 7 -- Overshoot as a function of input current

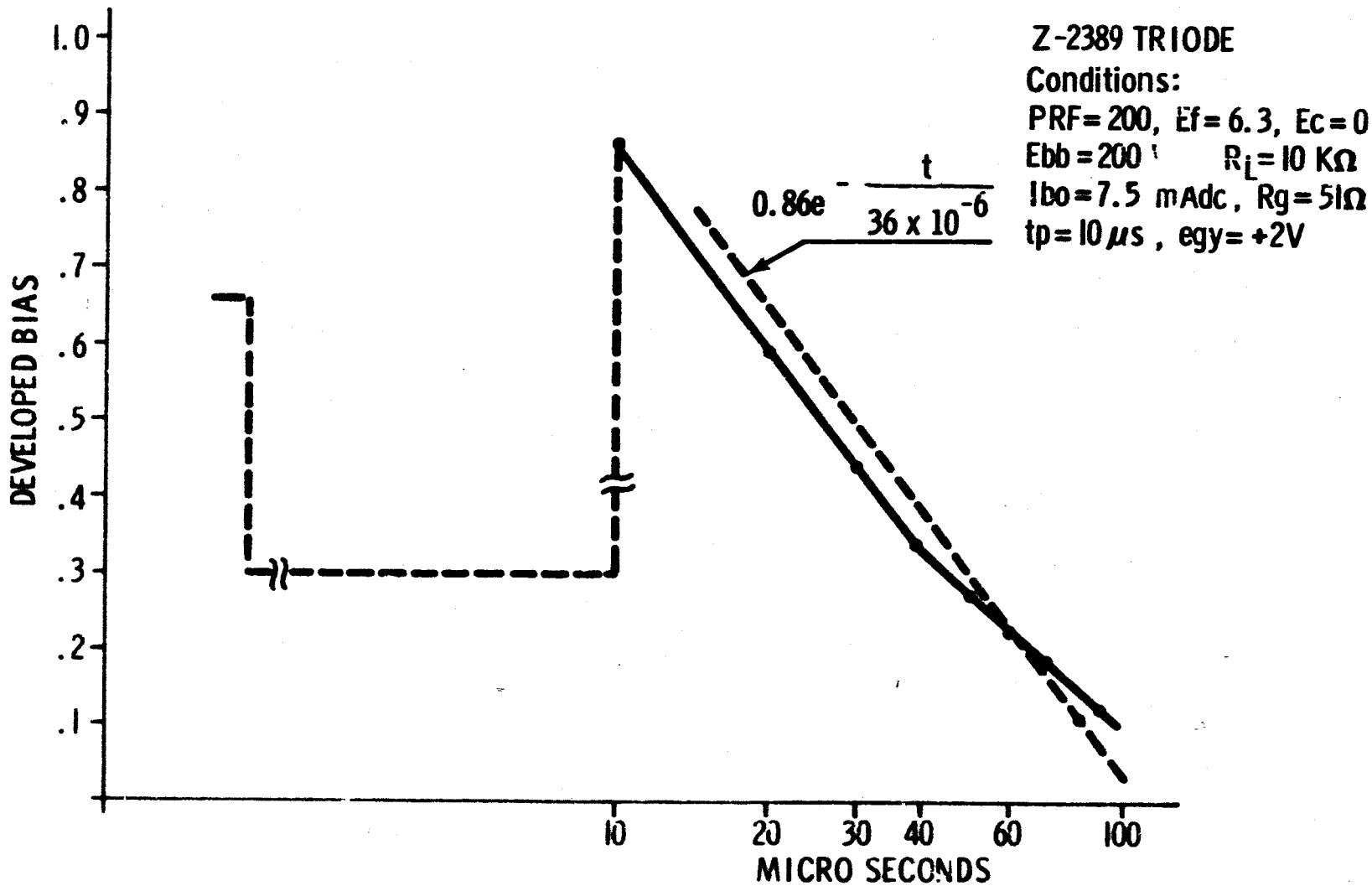

Fig. 8 -- Decay of developed bias

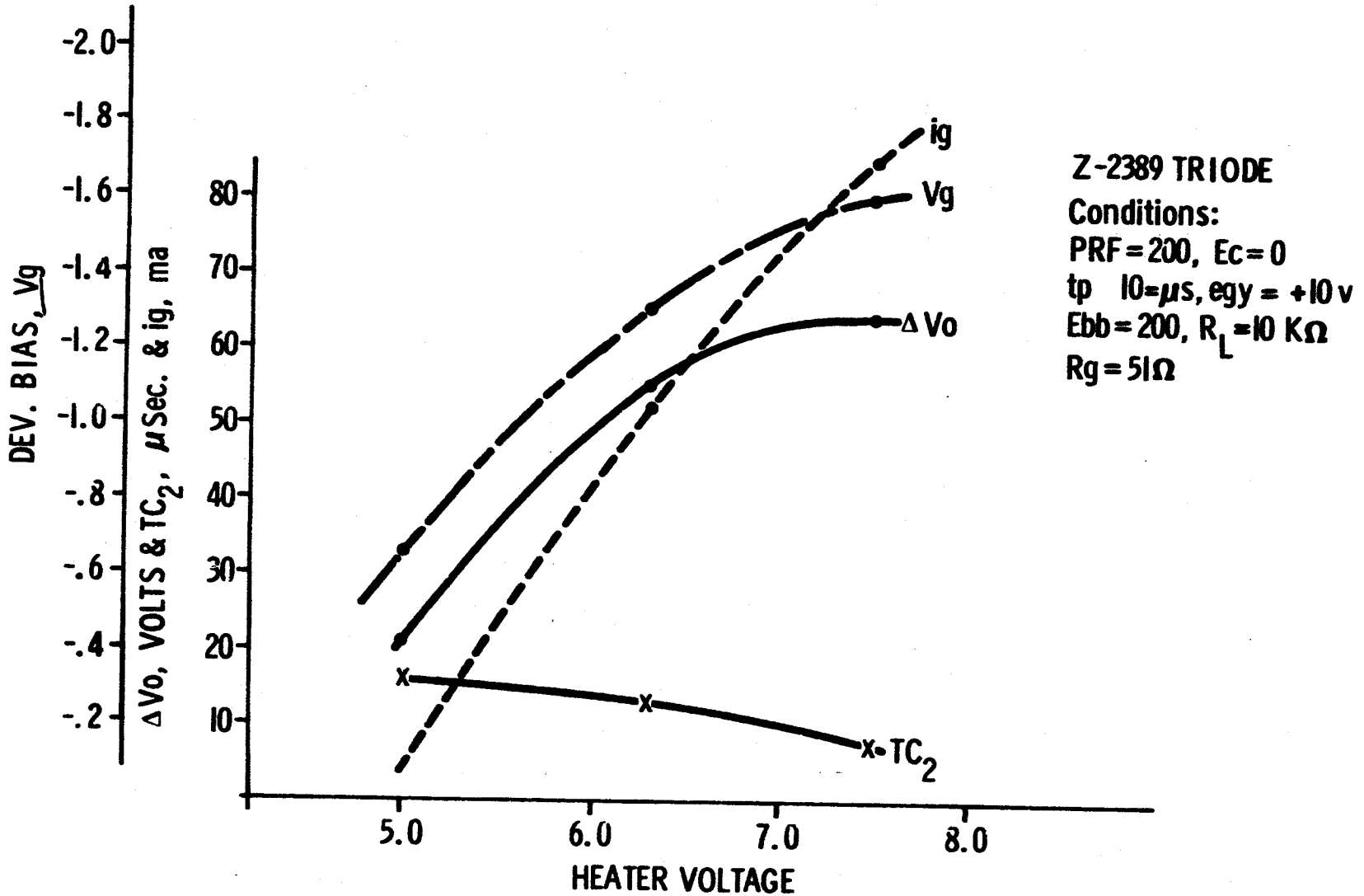

Fig. 9 -- Overshoot, developed bias, recovery-time constant, and peak grid current as a function of heater voltage

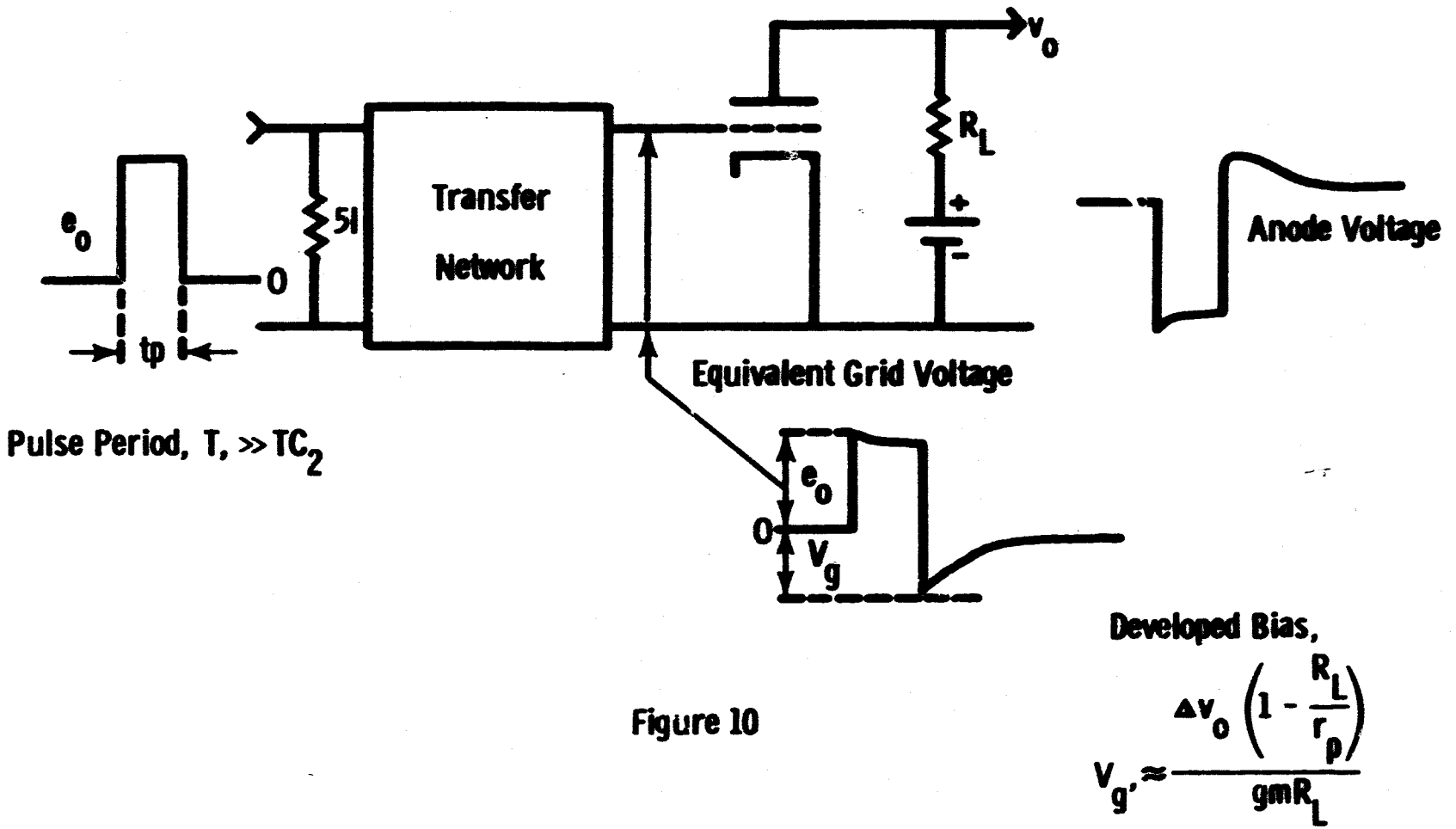

Developed Bias,

$$V_{g'} \approx \frac{\Delta v_o \left(1 - \frac{R_L}{r_p}\right)}{g_m R_L}$$

Figure 10

Fig. 10 -- General equivalent circuit

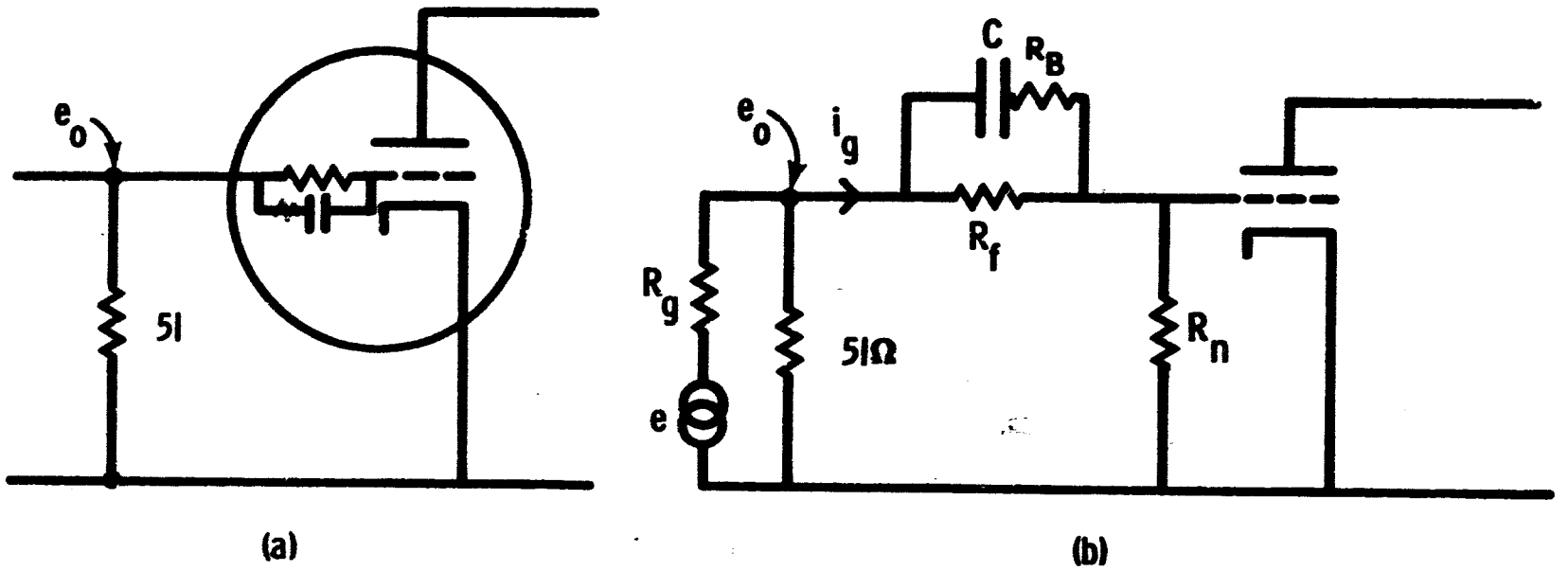

Fig. 11 -- Equivalent circuit, parallel R-C

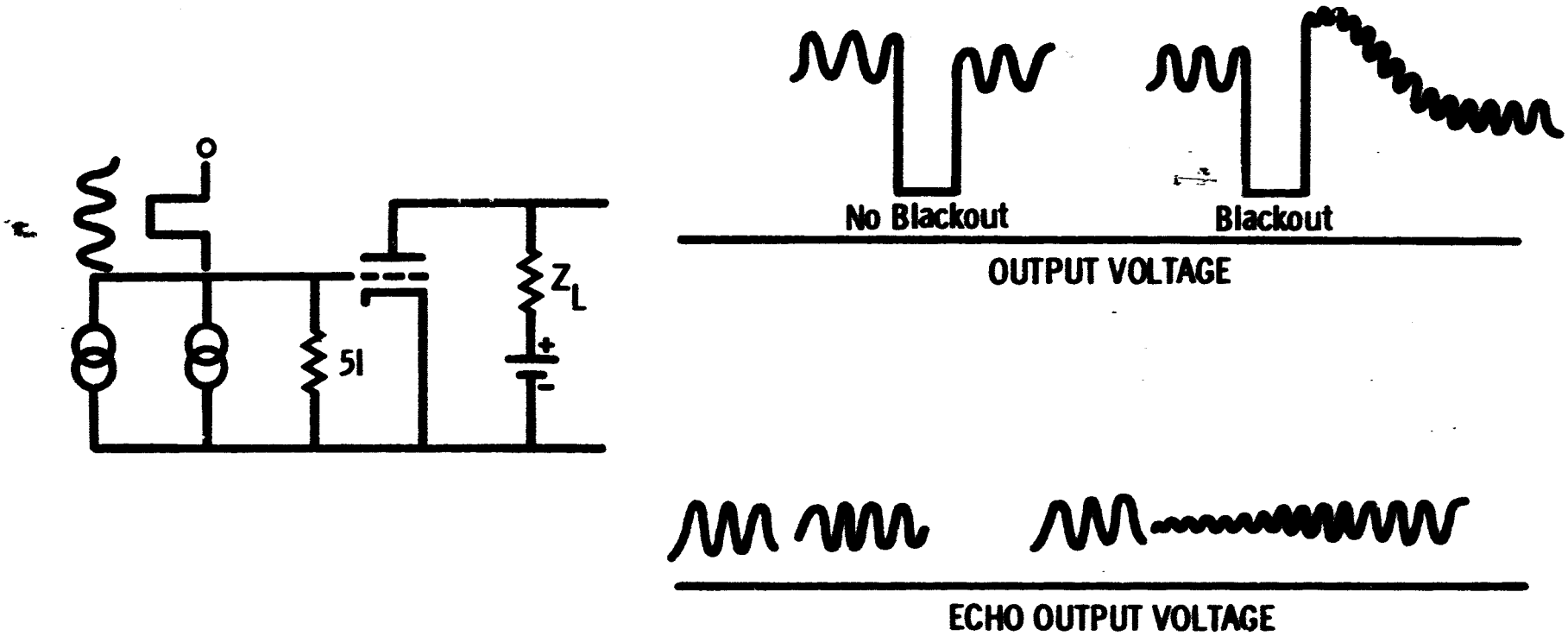

Fig. 12 -- UHF mixer, gain reduction

BIBLIOGRAPHY

(1) Copeland, P. L., "Anode Effect as a Function of Temperature," Phys. Rev., vol. 57, 1940, p. 625.

(2) Nottingham, "Spurious Contact Potentials 'Trapped' Electrons," (Abstract) Phys. Rev., vol. 39, 1932, p. 183.

(3) Babcock, W. E., "Unusual Tube Effects Cause Circuit Troubles," Electronics, vol. 31, September 12, 1958, p. 90.

(4) Courtesy of G. T. Ford, Bell Telephone Laboratories, November 1955.